AUTHENTICATED
U.S. GOVERNMENT
INFORMATION
GPO

FEDERAL REGISTER

Vol. 87 Friday

No. 140 July 22, 2022

Pages 43731–43984

OFFICE OF THE FEDERAL REGISTER

The **FEDERAL REGISTER** (ISSN 0097–6326) is published daily, Monday through Friday, except official holidays, by the Office of the Federal Register, National Archives and Records Administration, under the Federal Register Act (44 U.S.C. Ch. 15) and the regulations of the Administrative Committee of the Federal Register (1 CFR Ch. I). The Superintendent of Documents, U.S. Government Publishing Office, is the exclusive distributor of the official edition. Periodicals postage is paid at Washington, DC.

The **FEDERAL REGISTER** provides a uniform system for making available to the public regulations and legal notices issued by Federal agencies. These include Presidential proclamations and Executive Orders, Federal agency documents having general applicability and legal effect, documents required to be published by act of Congress, and other Federal agency documents of public interest.

Documents are on file for public inspection in the Office of the Federal Register the day before they are published, unless the issuing agency requests earlier filing. For a list of documents currently on file for public inspection, see *www.federalregister.gov.*

The seal of the National Archives and Records Administration authenticates the Federal Register as the official serial publication established under the Federal Register Act. Under 44 U.S.C. 1507, the contents of the **Federal Register** shall be judicially noticed.

The **Federal Register** is published in paper and on 24x microfiche. It is also available online at no charge at *www.govinfo.gov*, a service of the U.S. Government Publishing Office.

The online edition of the **Federal Register** is issued under the authority of the Administrative Committee of the Federal Register as the official legal equivalent of the paper and microfiche editions (44 U.S.C. 4101 and 1 CFR 5.10). It is updated by 6:00 a.m. each day the **Federal Register** is published and includes both text and graphics from Volume 1, 1 (March 14, 1936) forward. For more information, contact the GPO Customer Contact Center, U.S. Government Publishing Office. Phone 202-512-1800 or 866-512-1800 (toll free). E-mail, *gpocusthelp.com.*

The annual subscription price for the **Federal Register** paper edition is $860 plus postage, or $929, for a combined **Federal Register, Federal Register** Index and List of CFR Sections Affected (LSA) subscription; the microfiche edition of the **Federal Register** including the **Federal Register** Index and LSA is $330, plus postage. Six month subscriptions are available for one-half the annual rate. The prevailing postal rates will be applied to orders according to the delivery method requested. The price of a single copy of the daily **Federal Register,** including postage, is based on the number of pages: $11 for an issue containing less than 200 pages; $22 for an issue containing 200 to 400 pages; and $33 for an issue containing more than 400 pages. Single issues of the microfiche edition may be purchased for $3 per copy, including postage. Remit check or money order, made payable to the Superintendent of Documents, or charge to your GPO Deposit Account, VISA, MasterCard, American Express, or Discover. Mail to: U.S. Government Publishing Office—New Orders, P.O. Box 979050, St. Louis, MO 63197-9000; or call toll free 1-866-512-1800, DC area 202-512-1800; or go to the U.S. Government Online Bookstore site, see *bookstore.gpo.gov.*

There are no restrictions on the republication of material appearing in the **Federal Register.**

How To Cite This Publication: Use the volume number and the page number. Example: 87 FR 12345.

Postmaster: Send address changes to the Superintendent of Documents, Federal Register, U.S. Government Publishing Office, Washington, DC 20402, along with the entire mailing label from the last issue received.

SUBSCRIPTIONS AND COPIES

PUBLIC

Subscriptions:

Paper or fiche	**202–512–1800**
Assistance with public subscriptions	**202–512–1806**

General online information **202–512–1530; 1–888–293–6498**

Single copies/back copies:

Paper or fiche	**202–512–1800**
Assistance with public single copies	**1–866–512–1800 (Toll-Free)**

FEDERAL AGENCIES

Subscriptions:

Assistance with Federal agency subscriptions:

Email	*FRSubscriptions@nara.gov*
Phone	**202–741–6000**

The Federal Register Printing Savings Act of 2017 (Pub. L. 115-120) placed restrictions on distribution of official printed copies of the daily **Federal Register** to members of Congress and Federal offices. Under this Act, the Director of the Government Publishing Office may not provide printed copies of the daily **Federal Register** unless a Member or other Federal office requests a specific issue or a subscription to the print edition. For more information on how to subscribe use the following website link: *https://www.gpo.gov/frsubs.*

Printed on recycled paper.

Contents

Federal Register

Vol. 87, No. 140

Friday, July 22, 2022

Agricultural Marketing Service
PROPOSED RULES
2020 Annual Updates to List of Bioengineered Foods, 43751–43755

Agriculture Department
See Agricultural Marketing Service
See Rural Housing Service
NOTICES
Agency Information Collection Activities; Proposals, Submissions, and Approvals, 43780

Centers for Disease Control and Prevention
NOTICES
Agency Information Collection Activities; Proposals, Submissions, and Approvals, 43857–43868
Meetings:
National Center for Health Statistics, ICD–10 Coordination and Maintenance, 43861–43862
Requests for Nominations:
Clinical Laboratory Improvement Advisory Committee, 43859–43860

Centers for Medicare & Medicaid Services
NOTICES
Meetings:
Medicare Program; Advisory Panel on Hospital Outpatient Payment, 43868–43870

Children and Families Administration
NOTICES
Agency Information Collection Activities; Proposals, Submissions, and Approvals:
Community Economic Development Standard Reporting Format, 43870

Civil Rights Commission
NOTICES
Meetings:
Nebraska Advisory Committee, 43783–43784
New York Advisory Committee, 43784

Coast Guard
RULES
Safety Zones:
Fairport Harbor, Fairport, OH, 43742–43744

Commerce Department
See Industry and Security Bureau
See International Trade Administration
See National Oceanic and Atmospheric Administration
See National Telecommunications and Information Administration

Committee for Purchase From People Who Are Blind or Severely Disabled
NOTICES
Procurement List; Additions and Deletions, 43796–43797

Commodity Futures Trading Commission
NOTICES
Agency Information Collection Activities; Proposals, Submissions, and Approvals:
Protection of Consumer Information Under the Fair Credit Reporting Act, 43797–43798

Copyright Office, Library of Congress
RULES
Liberalizing the Deposit Requirements for Registering a Single Issue of a Serial Publication, 43744–43746

Education Department
See National Assessment Governing Board
NOTICES
Agency Information Collection Activities; Proposals, Submissions, and Approvals:
Family Education Rights and Privacy Act and Protection of Pupil Rights Amendment E–Complaint Forms, 43808
Applications for New Awards:
Expanding Opportunity Through Quality Charter Schools Program: National Dissemination Grants, 43802–43807

Employee Benefits Security Administration
NOTICES
Agency Information Collection Activities; Proposals, Submissions, and Approvals, 43897–43901

Energy Department
See Federal Energy Regulatory Commission
RULES
Energy Conservation Program:
Certification for Ceiling Fan Light Kits, General Service Incandescent Lamps, Incandescent Reflector Lamps, etc., 43952–43980
NOTICES
Energy Conservation Program:
Notification of Petition for Waiver of Norlake, Inc., 43808–43837
Meetings:
Environmental Management Site-Specific Advisory Board, Paducah, 43837

Environmental Protection Agency
PROPOSED RULES
Air Quality State Implementation Plans; Approvals and Promulgations:
Finding of Failure To Attain and Reclassification of Las Vegas Area as Moderate for the 2015 Ozone National Ambient Air Quality Standard, 43764–43772
Louisiana; Repeal of Excess Emissions Related Provisions, 43760–43764
Community Right-to-Know:
Adopting 2022 North American Industry Classification System Codes for Toxics Release Inventory Reporting, 43772–43779
NOTICES
Agency Information Collection Activities; Proposals, Submissions, and Approvals, 43843–43847
Environmental Impact Statements; Availability, etc.:
Weekly Receipt, 43848

Permits; Applications, Issuances, etc.:
National Pollutant Discharge Elimination System General Permit, New and Existing Sources and New Dischargers, Offshore Subcategory, Oil and Gas Extraction Category, Western Portion of the Outer Continental Shelf, Gulf of Mexico, 43847–43848

Federal Aviation Administration
PROPOSED RULES
Airspace Designations and Reporting Points:
Northeast United States, 43755–43760

Federal Bureau of Investigation
NOTICES
Agency Information Collection Activities; Proposals, Submissions, and Approvals, 43896–43897

Federal Communications Commission
NOTICES
Agency Information Collection Activities; Proposals, Submissions, and Approvals, 43849–43850
Meetings, 43849

Federal Deposit Insurance Corporation
NOTICES
Agency Information Collection Activities; Proposals, Submissions, and Approvals, 43850–43852

Federal Election Commission
NOTICES
Meetings; Sunshine Act, 43852–43853

Federal Energy Regulatory Commission
NOTICES
Agency Information Collection Activities; Proposals, Submissions, and Approvals, 43837–43838
Application:
Rye Bailey Hydroelectric, LLC, 43840–43841
Combined Filings, 43841–43842
Meetings:
Joint Federal-State Task Force on Electric Transmission, 43842–43843
Petition for Declaratory Order:
Orlando Utilities Commission, 43842
Request under Blanket Authorization:
WBI Energy Transmission, Inc., 43838–43840
Waiver Period for Water Quality Certification Application:
Little Falls Hydroelectric Associates, LP, 43840

Federal Mediation and Conciliation Service
NOTICES
Privacy Act; Systems of Records, 43853–43855

Fish and Wildlife Service
NOTICES
Environmental Impact Statements; Availability, etc.:
Barred Owl Management Strategy: Washington, Oregon, and California, 43886–43889
Permits; Applications, Issuances, etc.:
Proposed Habitat Conservation Plan for the Sand Skink and Blue-Tailed Mole Skink: Polk County, FL; Categorical Exclusion, 43885–43886

Food and Drug Administration
NOTICES
Agency Information Collection Activities; Proposals, Submissions, and Approvals:
Manufactured Food Regulatory Program Standards, 43872–43874
Tobacco Health Document Submission, 43875–43877
Emergency Use Authorization:
Certain Medical Devices During COVID–19, 43877–43880
Guidance:
Real-Time Oncology Review, 43870–43872
Patent Extension Regulatory Review Period:
Tauvid, 43874–43875
Withdrawal of Approval of Drug Application:
Panray Corp. Sub Ormont Drug and Chemical Co., Inc., et al., 43872

Foreign Assets Control Office
NOTICES
Sanctions Actions, 43944–43947

Government Ethics Office
NOTICES
Agency Information Collection Activities; Proposals, Submissions, and Approvals:
Modified Qualified Trust Model Certificates and Model Trust Documents, 43855–43857

Health and Human Services Department
See Centers for Disease Control and Prevention
See Centers for Medicare & Medicaid Services
See Children and Families Administration
See Food and Drug Administration

Homeland Security Department
See Coast Guard
See U.S. Customs and Border Protection
PROPOSED RULES
Privacy Act; Implementation of Exemptions:
Customs Broker Management System of Records, 43749–43751
NOTICES
Privacy Act; Systems of Records, 43880–43885

Housing and Urban Development Department
NOTICES
Privacy Act; Systems of Records, 43885

Indian Affairs Bureau
NOTICES
Agency Information Collection Activities; Proposals, Submissions, and Approvals, 43889–43893

Industry and Security Bureau
NOTICES
Order Denying Export Privileges:
Ismael Gomez, Jr., 43785–43786
Scott Douglas Browning, 43784–43785

Institute of Museum and Library Services
NOTICES
Agency Information Collection Activities; Proposals, Submissions, and Approvals:
State Library Administrative Agency Survey, FY 2022–2024, 43904

Interior Department
See Fish and Wildlife Service
See Indian Affairs Bureau
See Land Management Bureau

Internal Revenue Service
NOTICES
Agency Information Collection Activities; Proposals, Submissions, and Approvals:
Application for Approval of Prototype or Employer Sponsored Individual Retirement Account, 43947–43948

International Trade Administration
NOTICES
Antidumping or Countervailing Duty Investigations, Orders, or Reviews:
Citric Acid and Certain Citrate Salts From Colombia, 43786–43787
Heavy Walled Rectangular Welded Steel Pipes and Tubes From Mexico, 43788

International Trade Commission
NOTICES
Investigations; Determinations, Modifications, and Rulings, etc.:
Certain Rotating 3–D LiDAR Devices, Components Thereof, and Sensing Systems Containing the Same, 43895–43896

Justice Department
See Federal Bureau of Investigation

Labor Department
See Employee Benefits Security Administration
NOTICES
Agency Information Collection Activities; Proposals, Submissions, and Approvals:
Benefit Rights and Experience Report, 43901–43902
Trade Adjustment Assistance Program Reserve Funding Request, 43902–43903
Unemployment Compensation for Ex-Servicemembers Handbook, 43903

Land Management Bureau
NOTICES
Environmental Impact Statements; Availability, etc.:
Nevada Vanadium Co. Gibellini Mine Project, Eureka County, NV, 43894–43895
Plats of Survey:
Alaska, 43893–43894
Public Land Order:
No. 7910, Extension of No. 7533; Withdrawal of National Forest System Land for the Holden Mine Reclamation Project, Washington, 43894

Library of Congress
See Copyright Office, Library of Congress

Management and Budget Office
NOTICES
Senior Executive Service Performance Review Board Membership, 43903–43904

Maritime Administration
NOTICES
Agency Information Collection Activities; Proposals, Submissions, and Approvals:
Request for Transfer of Ownership, Registry, and Flag, or Charter, Lease, or Mortgage of U.S. Citizen Owned Documented Vessels, 43933–43934
Coastwise Endorsement Eligibility Determination for a Foreign-Built Vessel:
Adventure (Motor), 43932–43933
Distraction (Motor), 43939–43940
Double V (Motor), 43940–43941
Eros (Motor), 43943–43944
Felicita (Motor), 43937–43938
Island Tempus (Motor), 43936
Maxim (Motor), 43941–43942
Mordidita (Motor), 43936–43937
Odyssey (Sail), 43934–43935
Rapscallion (Sail), 43935
Tantara (Sail), 43942–43943
Voyager (Motor), 43938–43939

National Assessment Governing Board
NOTICES
Meetings, 43800–43802

National Foundation on the Arts and the Humanities
See Institute of Museum and Library Services

National Oceanic and Atmospheric Administration
NOTICES
Agency Information Collection Activities; Proposals, Submissions, and Approvals:
National Oceanic and Atmospheric Administration, Office of Education, Higher Education Scholarship, Fellowship and Internship Programs, 43793–43794
Draft Revised Management Plan:
He'eia National Estuarine Research Reserve, 43790–43791
Meetings:
Caribbean Fishery Management Council, 43791–43792
Fisheries of the South Atlantic, Gulf of Mexico, and Caribbean; Southeast Data, Assessment, and Review, 43792–43793
Fisheries of the South Atlantic; South Atlantic Fishery Management Council, 43788–43789, 43793
Mid-Atlantic Fishery Management Council, 43789–43790

National Science Foundation
NOTICES
Agency Information Collection Activities; Proposals, Submissions, and Approvals:
Polar Media Program Application Form for the Arctic and the U.S. Antarctic Program, 43905
Meetings:
Advisory Committee for Integrative Activities, 43905

National Telecommunications and Information Administration
NOTICES
Agency Information Collection Activities; Proposals, Submissions, and Approvals:
State Digital Equity Planning Grant Program, 43795–43796

Nuclear Regulatory Commission
NOTICES
Agency Information Collection Activities; Proposals, Submissions, and Approvals:
General Licensee Registration, 43907–43908
Rules of General Applicability to Domestic Licensing of Byproduct Material, 43908–43909
Consolidated Decommissioning Guidance, Characterization, Survey, and Determination of Radiological Criteria, 43906–43907
Environmental Impact Statements; Availability, etc.:
Holtec International HI–STORE Consolidated Interim Storage Facility Project, 43905–43906

Establishment of Atomic Safety and Licensing Board:
Entergy Nuclear Operations, Inc., Entergy Nuclear Palisades, LLC, Holtec International, and Holtec Decommissioning International, LLC (Palisades Nuclear Plant and Big Rock Point Site), 43909–43910

Presidential Documents
ADMINISTRATIVE ORDERS
Transnational Criminal Organizations; Continuation of National Emergency (Notice of July 21, 2022), 43981–43984

Rural Housing Service
NOTICES
Agency Information Collection Activities; Proposals, Submissions, and Approvals:
Analyzing Credit Needs and Graduation of Borrowers, 43781–43782
Applicant Reference Letter (A Request for Credit References), 43782–43783
Debt Settlement, Community and Business Programs, 43780–43781

Securities and Exchange Commission
NOTICES
Meetings; Sunshine Act, 43923–43924
Self-Regulatory Organizations; Proposed Rule Changes:
MIAX PEARL, LLC, 43910–43911
New York Stock Exchange, LLC, 43914–43923
NYSE American, LLC, 43926–43928
NYSE Arca, Inc., 43911–43914
NYSE National, Inc., 43924–43926

Small Business Administration
RULES
Past Performance Ratings for Small Business Joint Venture Members and Small Business First-Tier Subcontractors, 43731–43740

State Department
NOTICES
Culturally Significant Objects Imported for Exhibition:
Meret Oppenheim: My Exhibition, 43929
Meetings:
United States-Chile Environmental Affairs Council and Joint Commission for Environmental Cooperation, 43928–43929

Surface Transportation Board
NOTICES
Exemption:
Norfolk Southern Railway Co., Union County Industrial Railroad Co.; Trackage Rights, 43931
TGS Cedar Port Railroad, LLC, Chambers County, TX; Operation, 43929–43931
Trans-Global Solutions, Inc., TGS Cedar Port Railroad, LLC; Continuance in Control, 43930–43932

Transportation Department
See Federal Aviation Administration
See Maritime Administration

Treasury Department
See Foreign Assets Control Office
See Internal Revenue Service
NOTICES
Agency Information Collection Activities; Proposals, Submissions, and Approvals, 43948–43949

U S International Development Finance Corporation
NOTICES
Agency Information Collection Activities; Proposals, Submissions, and Approvals, 43798–43800

U.S. Customs and Border Protection
RULES
List of User Fee Airports:
Addition of Four Airports, Removal of Two Airports, 43740–43741

Veterans Affairs Department
RULES
Claims and Appeals Modernization, 43746–43748
NOTICES
Agency Information Collection Activities; Proposals, Submissions, and Approvals:
Application Request To Add and/or Remove Dependents, 43949

Separate Parts In This Issue

Part II
Energy Department, 43952–43980

Part III
Presidential Documents, 43981–43984

Reader Aids

Consult the Reader Aids section at the end of this issue for phone numbers, online resources, finding aids, and notice of recently enacted public laws.

To subscribe to the Federal Register Table of Contents electronic mailing list, go to https://public.govdelivery.com/accounts/USGPOOFR/subscriber/new, enter your e-mail address, then follow the instructions to join, leave, or manage your subscription.

CFR PARTS AFFECTED IN THIS ISSUE

A cumulative list of the parts affected this month can be found in the Reader Aids section at the end of this issue.

3 CFR

Administrative Orders:

Notices:

Notice of July 21, 2022 43983

6 CFR

Proposed Rules:

5 43749

7 CFR

Proposed Rules:

66 43751

10 CFR

429 43952

13 CFR

125 43731

14 CFR

Proposed Rules:

71 (3 documents) 43755, 43757, 43759

19 CFR

122 43740

33 CFR

165 43742

37 CFR

202 43744

38 CFR

17 43746

70 43746

40 CFR

Proposed Rules:

52 (2 documents) 43760, 43764

81 43764

372 43772

Rules and Regulations

Federal Register
Vol. 87, No. 140
Friday, July 22, 2022

This section of the FEDERAL REGISTER contains regulatory documents having general applicability and legal effect, most of which are keyed to and codified in the Code of Federal Regulations, which is published under 50 titles pursuant to 44 U.S.C. 1510.

The Code of Federal Regulations is sold by the Superintendent of Documents.

SMALL BUSINESS ADMINISTRATION

13 CFR Part 125

RIN 3245–AH71

Past Performance Ratings for Small Business Joint Venture Members and Small Business First-Tier Subcontractors

AGENCY: U.S. Small Business Administration.

ACTION: Final rule.

SUMMARY: The U.S. Small Business Administration (SBA) is amending its regulations to implement new provisions of the National Defense Authorization Act (NDAA) Fiscal Year (FY) 2021. The final rule provides new methods for small business government contractors to obtain past performance ratings to be used with offers on prime contracts with the Federal Government. A small business contractor may use a past performance rating for work performed as a member of a joint venture or for work performed as a first-tier subcontractor. This final rule updates the requirements for small business subcontracting plans to add a requirement for prime contractors to provide past performance to a first-tier, small business subcontractor when requested by the small business.

DATES: This rule is effective on August 22, 2022.

FOR FURTHER INFORMATION CONTACT: Donna Fudge, Procurement Analyst, Office of Policy Planning and Liaison, Small Business Administration, at *Donna.Fudge@sba.gov,* (202) 205–6363.

SUPPLEMENTARY INFORMATION:

I. Background Information

Section 868 of National Defense Authorization Act (NDAA) for Fiscal Year (FY) 2021, Public Law 116–283, addressed a common obstacle that small businesses may face when competing for prime Federal Government contracts: possessing qualifying past performance. The final rule implements section 868 by providing small businesses with two new methods for obtaining qualifying past performance. First, a small business may use the past performance of a joint venture of which it is a member, provided that the small business worked on the joint venture's contract or contracts. Second, a small business may use past performance it obtained as a first-tier subcontractor on a prime contract with a subcontracting plan. For this latter method, section 868 authorizes the small business to seek a past performance rating from the prime contractor and submit the rating with the small business' offer on a new prime contract. SBA published a proposed rule on November 18, 2021, 86 FR 64410, to implement section 868. After receiving comments from the public, SBA finalizes the rule with the changes described below.

Section 868 added a new section 15(e)(5) to the Small Business Act, 15 U.S.C. 644(e)(5), to address past performance ratings of joint ventures for small business concerns. A small business concern that previously participated in a joint venture with another business concern (whether or not the other concern was small) may use the past performance of the joint venture with the small business' offer on a prime contract. Section 15(e)(5) required SBA to establish regulations to allow the small business to elect to use the joint venture's past performance if the small business has no relevant past performance of its own. The small business must: (i) identify to the contracting officer the joint venture of which the small business was a member; (ii) specify the contract(s) of the joint venture the small business elects to use; and (iii) inform the contracting officer what duties and responsibilities the small business carried out as part of the joint venture. In turn, the contracting officer shall consider the past performance of the joint venture when evaluating the past performance of the small business concern, giving due consideration to the information submitted about the duties and responsibilities that the small business carried out.

To address first-tier small business subcontractors, section 868 amended section 8(d)(17) of the Small Business Act, 15 U.S.C. 637(d)(17), which previously discussed a pilot program, to provide past performance ratings for small business subcontractors. Under section 868, small business concerns may obtain past performance ratings for performance as a first-tier subcontractor on a prime contract that included a subcontracting plan. The final rule requires the prime contractor on the prime contract to provide a rating of the small business' past performance with respect to that prime contract to the small business within 15 calendar days of the request. If the small business elects to use the past performance rating, the contracting officer shall consider the past performance rating when evaluating the small business' offer on a prime contract.

This final rule creates a separate mechanism for first-tier subcontractors to obtain past performance ratings. A Federal Acquisition Regulation (FAR) rule implementing this requirement will account for the additional burden in its existing information collection and clearance for the information collection will be obtained by the General Services Administration (GSA) for the FAR Council.

SBA received 15 comments in response to the proposed rule. The following discusses and responds to the comments.

II. Summary of and Response to Comments

Support for the Rule

Comment: SBA received numerous comments expressing support for this final rule.

Response: SBA appreciates the feedback and engagement from stakeholders. SBA will implement the rule with the changes as noted below.

Outside the Scope of the Rule

Comments: Comments were received pertaining to SBA's revised regulations to facilitate agency use of affiliate past performance. Both commenters suggested the Federal Acquisition Regulation (FAR) section 15.305(a)(2)(iii) be amended to mandate past performance acquired by entity-owned affiliated/sister companies be evaluated.

Response: SBA does not have authority to amend the FAR. Requiring procuring activities to use affiliate/sister companies past performance would require the FAR Council to open a FAR

Case. Therefore, the proposed change is outside the scope of this rulemaking.

Comment: A commenter suggested continued use of Past Performance Questionnaires and increasing use of small business invitation for bid set-aside opportunities. This commenter also suggested promotion of SBA's Mentor-Protégé program and consideration by the government of past performance from commercial (non-Federal) projects.

Response: The FAR currently provides for consideration of Federal, State, and local government, and private past performance. *See* FAR 15.305(a)(2)(ii). Additionally, SBA recently amended its Mentor-Protégé regulation (85 FR 66146), effective November 16, 2020, and the amended regulation allows for consideration of past performance of both members of a Mentor-Protégé relationship. Therefore, no changes to this rule are necessary.

Negative Impact on Small Business From No Past Performance

SBA requested comments on whether small business subcontractors have been negatively impacted in competing for prime contracts due to not having a past performance rating(s).

Comments: There were several responsive comments, and all the respondents described some level of negative impact to small business because of lack of past performance ratings. More specifically, most of the commenters observed that solicitations require small businesses to have prior past performance—and in some cases, as a prime contractor—to win a prime contract. This treatment limits the ability of Black-owned small businesses and Native-owned small businesses to compete for contracts, in particular, two commenters stated. Additionally, four commenters suggested that lack of past performance creates an obstacle to small business participation, restrains competition, and restricts the government's access to innovative products.

Response: SBA acknowledges the impediments that small businesses have faced due to not having past performance ratings. As it now stands, FAR 15.302(a)(2)(iv) provides small businesses the opportunity to compete without a record of past performance. Section 868 of the NDAA FY 2021, however, sought to address small businesses not being able to compete for contracts because of lack of past performance. SBA believes that, by implementing this rule, the government will be able to attract new small business prime contractors. This will enhance competition in government contracting and provide agencies with increased access to innovative products and services.

Timeframe for Responding to a Small Business' Request for a Rating

Comments: The time period within which the prime contractor must respond to the subcontractor's request was set at 15 calendar days in the proposed rule. Three commenters supported the 15-calendar-day time period. One commenter requested a 10-business-day period, and another commenter requested a 15-business-day period. One commenter believed that a longer period of 30 days would still allow subcontractors enough time to prepare their proposal packages. Another commenter also observed that subcontractors could negotiate a period shorter than 15 days, and prime contractors could require in the subcontract that subcontractors reuse prior ratings from the same prime if one already has been provided.

Response: SBA adopts the 15 calendar-day response period as specified in the proposed rule. That period provides enough time for the prime contractor to prepare a response while still permitting the small business to respond to proposal deadlines. With respect to reusing prior ratings, the rule permits the subcontractor to use the same rating for multiple proposals. SBA does not anticipate that subcontractors will request multiple ratings from a prime contractor for the same work.

Timeframe for Using the Rating

Comments: Two commenters sought clarification on the period within which a subcontractor could continue to use its past performance rating for offers on prime contracts. The commenters suggested that a rating completed by the prime at the end of the contract be valid for three years to five years.

Response: The proposed rule had included a provision, similar to FAR 42.1503(g), that past performance would need to be from within three years (six for construction and architect-engineering) to be considered relevant. However, FAR 42.1503(g) applies only to past-performance information in CPARS, and, because the past-performance ratings in this rule are not in CPARS, that limitation does not apply. Instead, agencies have discretion to determine what is relevant with regard to past performance and could accept past performance that is older than the period in FAR 42.1503(g), as the comments suggest. The timeliness restriction also is not provided for in statute. This final rule therefore removes the timeliness restriction on using past performance.

Timeframe for Small Business Subcontractor To Request Past Performance Rating

SBA requested comments on whether to prescribe a time frame within which the subcontractor must make a request to the prime contractor for a rating under this final rule.

Comments: There were numerous comments suggesting a timeframe for the small business subcontractor to request a past performance rating. A few commenters suggested a 30-day time period after the period of performance within which the subcontractor would be required to request a rating. One suggested that the prime should review the small business on an annual basis, in addition to a review upon request during or within 90 days after the contractor's performance period. One commenter preferred a process in which the prime contractor would submit a rating within 14 days of the end of the contract and the subcontractor would receive 14 days to respond.

A separate commenter indicated that the subcontractors should be required to request a rating during the period of performance of the contract. Outside of the performance, the commenter stated, it would be difficult to accurately rate the subcontractor because of shifts in personnel. Similarly, another commenter wrote that subcontractors should not submit requests after the date of their final invoices. One commenter stated that SBA should require that the time period be specified in the subcontract agreement, but the commenter did not suggest a default period. Conversely, two commenters did not support negotiating the timelines and stated that the timelines should be uniform. One commenter expressed that subcontractors should only request ratings after the subcontractor's work is complete.

Response: SBA agrees with the commenters that the final rule should include a specific default period within which the subcontractor must submit its request to the prime contractor for a past performance rating. Based on the comments, SBA sets the deadline as 30 calendar days after completion of the period of performance for the prime contractor's contract with the government. This time period balances the prime's desire to avoid having an open-ended obligation, and the subcontractor's need for flexibility in submitting its request. The prime contractor and the subcontractor may choose to negotiate a later deadline than 30 calendar days after the prime's

contract completion. But the prime contractor cannot set a deadline earlier than the 30 calendar days after the prime's completion.

SBA disagrees that subcontractors should be limited to requesting ratings after their work on a contract is complete. For prime contracting, the government can provide ratings prior to contract completion (*i.e.,* at the end of base periods or option years). This rule treats subcontractors similarly by allowing them to request ratings midway through performance. Further, the intent of this change is to provide subcontractors more access to past performance ratings.

Allowing Ratings for Contracts Without a Subcontracting Plan

Comments: A few commenters suggested the rule should allow for ratings on subcontracts even where the prime is not required to have a subcontracting plan. These commenters expressed that this limits the ability to obtain a rating, particularly where the subcontractor is performing on another small business' prime contract.

Response: This final rule adopts the language in the proposed rule, which limited the requirement for subcontractors to request ratings to those prime contractors with subcontracting plans. Section 868 of NDAA FY 2021 included a precise definition of ''covered contract'' that limits application to those contracts with subcontracting plans. SBA observes, however, that a prime contractor could choose to provide a past performance rating, even though the contract did not include a subcontracting plan. An agency could then consider that rating at its discretion.

Concern Regarding Enforcement if Primes Do Not Provide Performance to Small Business Subcontractors

Comments: A few commenters expressed concern that there may be no enforcement mechanisms to ensure that prime contractors provide performance ratings for small business subcontractors. Three commenters specifically mentioned the lack of penalty for prime contractors that do not provide performance ratings.

Response: There are several provisions in the current regulatory framework that will help to enforce the duty of prime contractors to provide performance ratings for small business first-tier subcontractors when requested. The rule establishes that responding to subcontractor requests will be included in the prime contractor's subcontracting plans. See 13 CFR 125.3(c)(1)(xii)(A). There are consequences for failing to comply with a subcontracting plan, including: contract remedies such as termination for default or the withholding of award fees; a lower past performance rating under the subcontracting element (FAR 42.1502(g)(1) and 42.1503(b)(2)(v)); liquidated damages for failing to make a good faith effort to comply with the subcontracting plan (FAR 19.705–7); and even debarment if the failure is willful or repeated (FAR 9.406–2(b)(1)(i)).

Furthermore, subcontractors may notify the contracting officer of the prime's failure to provide a required rating, similar to the process provided for in FAR 52.242–5. SBA is therefore adding to this final rule that subcontractors should notify the contracting officer in the event that the prime contractor fails to submit the requested rating within the rule's prescribed timeframe.

Use of Standard/Contractor Performance Assessment Reporting System Format

Comments: SBA received several comments suggesting a standardized format for prime contractors to use in evaluating the past performance for subcontractors. Two commenters suggested using the Contractor Performance Assessment Reporting System (CPARS) format as the subcontractor past performance ratings format. Four commenters suggested using a standardized format, based on objective measures such as work scope and funded amount. One commenter suggested SBA should provide a sample past performance template to be added as an appendix to the subcontract. One commenter suggested clarification that a small business subcontractor rating does not need to be established for each subcontract.

Response: In response to these comments, SBA finds that the past performance evaluation factors should be the same as the CPARS evaluation factors. These evaluation factors are the minimum required to use in rating a subcontractor's past performance. The rule does not preclude the use of additional evaluation factors. In response to the comments seeking a standardized rating format, SBA is adding to the final rule that the prime contractor shall use the five-scale rating system at FAR 42.1503(b)(4): Exceptional, Very Good, Satisfactory, Marginal, and Unsatisfactory. SBA does not find it necessary to provide a past performance template, as the evaluation factors and ratings level mirror CPARS.

Concern About Subjective Performance Ratings and Inquiries on Disputing the Performance Rating

Comments: Several commenters expressed concern about subjective past performance ratings and whether subcontractors could dispute the past performance rating. One commenter suggested that the prime contractor's rating of its subcontractor(s) has the potential to be subjective because of changes in the program managers. One commenter stated there is the potential for conflicts with prime contractors providing subcontractor past performance ratings. Two commenters suggested the government should provide regulatory guidance and procedures to ensure unbiased or consistent and fair assessments. Three commenters suggested the subcontractors should be allowed to rebut the past performance rating issued by the prime, similar to how a prime rebuts its CPARS rating by the government.

Response: In response to these comments, SBA notes that the statute provides the small business subcontractor with discretion in electing to use or not use the past performance rating. As discussed in the comments regarding a standard format, and in response to the comment seeking additional guidance, the final rule includes a rating system by reference to the definitions in FAR 42.1503. This final rule does not adopt a rebuttal procedure as none is provided or required by the statute. However, subcontractors may be able to negotiate a rebuttal procedure as part of their subcontract.

Stakeholders Who Will Benefit From the Proposed Rule

Comments: Commenters expressed that the proposed rule would likely benefit certain stakeholders and groups more than others. One commenter believed that the proposed rule would tend to benefit small businesses that had been more established and had been doing business for a number of years. Another commenter believed that the proposed rule could specifically benefit small, Black-owned businesses.

Response: SBA agrees that this rule will mostly benefit small businesses that are prepared to bid on prime contracts but are currently held back by a lack of prime contract performance. The rule addresses this problem by allowing for past performance ratings for first-tier subcontracting experience. That is the design of the statute and the problem being addressed.

Retroactive Application of the Rule

Comment: A commenter suggested that the rule be made retroactive, so that subcontractors could receive past performance ratings on recently completed contracts.

Response: The final rule does not make the rule retroactive. Generally, unless their language requires it, new legislative enactments are not retroactive. *Bowen* v. *Georgetown Univ. Hosp.,* 488 U.S. 204, 208 (1988). Nevertheless, a prime contractor could respond to a first-tier subcontractor's request for a past performance rating, even if not required by the prime contractor's subcontracting plan. Such ratings still could be considered by the contracting agency if submitted with the proposal for a prime contract.

Prime Contractor Should Automatically Provide Past Performance Rating

Comments: Commenters expressed support for making a past performance rating of small business subcontractor(s) a requirement for prime contractors even if no past performance rating is requested by the small business subcontractor. In other words, the past performance rating would be automatic after performance. Both commenters believed that this should happen within 14 or 15 days of performance.

Response: Section 868 explicitly states that its requirements only apply when a first-tier small business subcontractor requests a past performance rating; therefore, it does not apply to all contracts, as not all first-tier subcontractors will request a past performance rating. The statute presumes this, perhaps because a small business might not be interested in bidding on future prime contracts or because it already has sufficient past performance to bid on a prime contract. Given the statutory language, this rule does not expand the coverage of past performance ratings, as doing so could potentially add unnecessary burden on prime contractors to issue performance ratings to every small business first-tier subcontractor.

Primes Should Rate Small Business Subcontractors as Part of the CPARS Process

Comments: Several commenters suggested prime contractors fill out small business subcontractor past performance ratings as part of CPARS. Two commenters suggested a first-tier subcontractor past performance rating be required to be filed annually by the prime as part of the prime's CPARS rating. One commenter suggested primes be required to file subcontractor past performance ratings as part of satisfactory completion of the prime's contract. One commenter suggested requiring a prime to complete a subcontractor past performance rating at the end of a contract or order.

Response: CPARS is a website designed for federal contracting officers to objectively evaluate the performance of prime contractors and allows other source selection officials to review contractor past performance ratings. The CPARS system is not designed to allow prime contractors the ability to complete a subcontractor past performance rating. Access to completed evaluations is restricted to individuals working on source selections for federal solicitations. In response to the comments, SBA notes that the statute, section 868, applies only when the small business has requested a past performance rating, not to every small business subcontract. Given the statutory language, this rule does not expand the coverage of past performance ratings, as doing so could potentially add unnecessary burden on prime contractors to issue performance ratings to every small business first-tier subcontractor.

Minimum Subcontract Value Threshold for Past Performance Rating

Comment: A commenter suggested the rule include a minimum threshold of $750,000.00 or $2 million, below which it would not apply to a subcontractor. The commenter suggested that the government conduct a study of the administrative cost of responding within the 15-day timeframe when the subcontract was of small value. Another commenter suggested that, when the subcontract exceeded the recommended threshold of 10% of the total contract value, the government be required to rate the subcontractor in CPARS.

Response: This rule implements section 868 of the NDAA for FY 2021, which applies to all eligible first-tier small business subcontractors performing on prime contracts with subcontracting plans. The statute did not include a threshold for applicability; therefore, no threshold is included in this final rule.

Reporting Mechanism for Subcontractor or Joint Venture Past Performance

Comments: Commenters suggested use of an explicit mechanism for reporting first-tier subcontractor performance. One commenter merely asked what systems would be utilized while the other commenter suggested a reporting mechanism from the prime contractor to the requesting agency.

Response: The statute that SBA is implementing does not create a formal reporting mechanism for past performance as a first-tier subcontractor. This is because it is up to the small business submitting past performance as a first-tier subcontractor to provide those ratings to the government. As the small business will be in possession of the past performance ratings, there is no need to formalize a reporting mechanism. Past performance ratings and/or information will be submitted to the agency in accordance with the solicitation.

Administrative Burden on Prime Contractors

Comment: A commenter expressed concern about the administrative burden on prime contractors in preparing subcontract past performance ratings. The commenter stated that its subcontractors have access to the performance rating system through a subcontractor portal; however, it is not unique to a specific contract.

Response: SBA notes the prime contractor is only required to provide a rating at the request of the first-tier small business subcontractor. Not every first-tier small business subcontractor will request a rating.

Subcontracting Past Performance Rating Should Be Weighted Differently Than Prime Contractor Performance

Comment: A commenter suggested that past performance as a subcontractor should be weighted less than past performance as a prime contractor. This commenter expressed concern that a small business subcontractor could selectively choose to request past performance only on projects where they expect a good rating. This is in contrast to prime contractor performance, which is always rated good or bad.

Response: SBA does not agree that first-tier subcontractor past performance should be weighted differently than prime contractor past performance. Implementing the statute in this manner would be inconsistent with its intent, which is to help small businesses to have qualifying past performance. In addition, while it is true that subcontractors may choose which contracts on which they request a performance rating, a prime contractor can also choose what past performance examples to submit with its proposal(s). In this way, a subcontractor's past performance rating is equivalent to that of a prime contractor. In addition, and in accordance with FAR 15.305(a)(2), when past performance is an evaluation factor, the currency and relevance of the

information, source of the information, context of the data, and general trends in contractor's performance shall be considered; therefore, there is no need to make explicit or require a contracting officer to evaluate past performance as a first-tier subcontractor differently than past performance as a prime contractor.

Evaluating Joint Venture Members Based on Ownership and Liability

Comment: A commenter opposed the restriction on evaluating joint venture members only on the duties and responsibilities that the member carried out as part of the joint venture. The commenter remarked that any joint venture with significant ownership is held jointly and severally liable for the work; as such, the member should enjoy the benefit of past performance credit.

Response: SBA believes the joint venture member should establish its participation in the joint venture's contract in order to receive past performance evaluation. This is necessary regardless of the member's level of participation because the agency needs to be able to gauge the relevancy of the past performance. Even where a member's involvement is limited to taking on risk and liability, that still could be part of the duties and responsibilities that the small business carried out for the joint venture.

Adding Language About the Subcontractor Past Performance Being Equal to CPARS Rating

Comment: A commenter suggested language should be added to 13 CFR 125.11(c)(3) making a subcontractor past performance rating equal to a CPARS rating for a prime contractor.

Response: SBA is not adopting this suggested language for the following reasons. SBA believes that, in most cases, the subcontractor past performance rating should be treated as equivalent to a prime's past performance rating. While agencies are required to use CPARS as one of the sources of past performance information in source selections when past performance is an evaluation factor, the FAR does not indicate that the information in CPARS is to be weighted more highly than information obtained from other sources. Under FAR 15.305(a)(2), when past performance is an evaluation factor, the currency and relevance of the information, source of the information, context of the data, and general trends in the contractor's performance shall be considered. Additionally, past performance is evaluated in accordance with the solicitation. The recency and relevancy of past-performance information will differ from one source selection to the next; therefore, it is not necessary to indicate that the past-performance rating provided to a first-tier small subcontractor by its prime contractor is equally weighted in importance to information obtained from CPARS. In response to this comment and for the reasons state above, SBA clarifies that the importance of past performance information is dependent on the individual acquisition, not on the source of the information.

III. Section-by-Section Analysis

13 CFR 125.3

This final rule adds a requirement to prime contractors' subcontracting plans. The subcontracting plan requires the prime contractor to provide a rating of a first-tier subcontractor's past performance within 15 calendar days of the first-tier subcontractor's request. The requested rating is prepared including, at a minimum, the following evaluation factors in the requested rating: (a) Technical (quality of product or service); (b) Cost control (not applicable for firm-fixed-price or fixed-price with economic price adjustment arrangements); (c) Schedule/timeliness; (d) Management or business relations; and (e) Other (as applicable). The requested rating will use the five-scale rating system from FAR 14.1503: Exceptional, Very Good, Satisfactory, Marginal, and Unsatisfactory.

13 CFR 125.11

This final rule renumbers 13 CFR 125.11 and subsequent sections to create a new section 125.11. New subsection 125.11(a) provides general guidance to require agencies to consider the past performance of certain small business offerors that have been members of joint ventures or first-tier subcontractors. The remainder of this final rule addresses the two scenarios from NDAA 2021.

First, a small business concern may receive past performance consideration for the past performance of a joint venture of which the small business was a member. To receive past performance consideration, where the small business does not independently demonstrate past performance necessary for award, the small business may elect to use the joint venture's past performance and the contracting officer shall consider the joint venture past performance that the small business has elected to use. In its offer for a prime contract, the small business must identify: (i) the joint venture; (ii) the contract(s) of the joint venture that the small business elects to use; and (iii) describe to the agency what duties or responsibilities the small business carried out as a joint venture member. The small business cannot, however, claim past performance credit for work performed exclusively by other partners to the joint venture.

As required by NDAA 2021, the contracting officer shall consider the information that the small business provided about its duties and responsibilities carried out as part of the joint venture. Where the small business does not independently demonstrate past performance necessary for award, agencies shall consider a small business' successful rating of past performance through a joint venture. For example, a solicitation might require three past performance examples. This final rule authorizes the small business offeror to submit two examples from performance in its own name and one example from performance of a joint venture of which it was a member if the small business cannot independently provide the third example of past performance on its own. This final rule provides that the joint venture's past performance may supplement the relevant past performance of the small business when the small business cannot independently demonstrate the past performance on its own.

Second, a small business concern may receive past performance consideration for performance as a first-tier subcontractor. NDAA FY21 directs that this mechanism is limited to small businesses that performed as first-tier subcontractors on contracts that include subcontracting plans. The small business may request a rating of its subcontractor past performance from the prime contractor. Under the final rule, the prime contractor must provide a rating to the requesting small business within 15 calendar days of the request.

Under this final rule, the requested rating is prepared including, at a minimum, the following evaluation factors in the requested rating: (a) Technical (quality of product or service); (b) Cost control (not applicable for firm-fixed-price or fixed-price with economic price adjustment arrangements); (c) Schedule/timeliness; (d) Management or business relations; and (e) Other (as applicable). The requested rating will use the five-scale rating system from FAR 42.1503: Exceptional, Very Good, Satisfactory, Marginal, and Unsatisfactory. The final rule does not contain a limit on how recent the evaluated contract must be. The final rule clarifies that one scenario where this applies is where the small business lacks a rating in the Contractor Performance Assessment Reporting System (CPARS).

This final rule clarifies that a joint venture composed of small businesses may receive past performance consideration for work that the joint venture performed as a first-tier subcontractor. A small business member of the joint venture subcontractor may request a past performance rating from the prime contractor for a contract that included a subcontracting plan. The prime contractor must provide the requested rating to the joint venture member within 15 calendar days of the request. The requested rating would be prepared to include, at a minimum, the following evaluation factors in the requested record: (a) Technical (quality of product or service); (b) Cost control (not applicable for firm-fixed-price or fixed-price with economic price adjustment arrangements); (c) Schedule/timeliness; (d) Management or business relations; (e) Other (as applicable). The small business could then use that rating to establish its past performance in accordance with the prior provision on submitting joint venture past performance.

13 CFR 125.28

SBA is changing the reference from 125.15(a) to 125.18(a) everywhere it appears in this section due to renumbering of sections. Section 125.18(a) provides the requirements for representation of service-disabled veteran-owned (SDVO) small business status.

13 CFR 125.29

SBA is changing the reference from 125.8 to 125.12 everywhere it appears in this section due to renumbering of sections. Section 125.12 provides the definitions that are important in the Service-Disabled Veteran-Owned (SDVO) Small Business Concern (SBC) program.

13 CFR 125.30

SBA is changing the reference from 125.8 to 125.12 everywhere it appears in this section due to renumbering of sections. Section 125.12 provides the definitions that are important in the SDVO SBC program.

IV. Compliance With Executive Orders 12866, 12988, 13132, 13175, 13563, the Congressional Review Act (5 U.S.C. 801–808), the Paperwork Reduction Act (44 U.S.C., Ch. 35), and the Regulatory Flexibility Act, (5 U.S.C. 601–612)

Executive Order 12866

The Office of Management and Budget (OMB) has determined that this rule is a significant regulatory action for the purposes of Executive Order 12866. Accordingly, the next section contains SBA's Regulatory Impact Analysis.

Regulatory Impact Analysis:

1. *Is there a need for the regulatory action?*

This rule is necessary to satisfy statutory requirements to implement section 868 of National Defense Authorization Act of Fiscal Year 2021 (NDAA FY 2021). Section 868 (e) requires the Administrator to issue rules to carry out the section.

Absence of past performance has been a limitation for small businesses when pursuing procurement opportunities that evaluate past performance. Small businesses often have past performance through work performed as a joint venture partner or as a subcontractor, but this experience and past performance is often not acknowledged or credited to the relevant small business in the evaluation process. This final rule is necessary to address that shortcoming in the evaluation of past performance and experience.

The Federal Acquisition Regulation (FAR) states that ''past performance, except as set forth in paragraph (c)(3)(iii) of this section, shall be evaluated in all source selections for negotiated competitive acquisitions expected to exceed the simplified acquisition threshold.'' See FAR 15.304(c)(3)(i). Past performance is ''one indicator of an offeror's ability to perform the contract successfully.'' See FAR 15.305(a)(2). FAR 15.305(a)(2)(iv) provides that, ''[i]n the case of an offeror without a record of relevant past performance or for whom information on past performance is not available, the offeror may not be evaluated favorably or unfavorably on past performance.'' Because past performance may be considered a responsibility factor or because past performance affects an offeror's evaluation as compared to other offerors, the ability of small businesses that have been first-tier subcontractors or participated in joint ventures to demonstrate past performance increases their competitiveness in Federal contracting.

2. *What is the baseline, and the incremental benefits and costs of this regulatory action?*

OMB directs agencies to establish an appropriate baseline to evaluate any benefits, costs, or transfer impacts of regulatory actions and alternative approaches considered. The baseline should represent the agency's best assessment of what the world would look like absent the regulatory action. For a regulatory action that modifies or replaces an existing regulation, a baseline assuming no change to the regulation generally provides an appropriate benchmark for evaluating benefits, costs, or transfer impacts of proposed regulatory changes and their alternatives. This final rule implements the changes, by modifying and expanding the rating procedures of the unimplemented pilot program in 8(d)(17) of the Small Business Act (15 U.S.C. 637(d)(17)), which was added by section 1822 of the National Defense Authorization Act of 2017.

NDAA FY 2021 amends Section 8(d)(17) of the Act to allow small businesses that performed as first tier subcontractors to request a past performance rating from the prime contractor. The prime contractor must provide a rating of the small business past performance with respect to that prime contract to the small business within 15 calendar days of the request. The requested rating would be prepared to include, at a minimum, the following evaluation factors in the requested rating: (a) Technical (quality of product or service); (b) Cost control (not applicable for firm-fixed price or fixed-price with economic price adjustment arrangements); (c) Schedule/timeliness; (d) Management or business relations; (e) Other (as applicable). The requested rating will use the five-scale rating system from FAR 42.1503: Exceptional, Very Good, Satisfactory, Marginal, and Unsatisfactory. This final rule modifies the pilot program, in which a small business that had not performed as a prime contractor could request a past performance rating in the Contractor Performance Assessment Reporting System (CPARS), if the small business is a first-tier subcontractor under a covered Federal Government contract requiring a subcontracting plan. Section 868(a) amends Section 15(e) of the Small Business Act to direct the establishment of regulations that allow the use of past performance in joint ventures in Federal contracting offers. This amendment expands the opportunities for past performance consideration by including consideration of the past performance of a joint venture of which the small business was a member.

The baseline is that which exists without implementation of the pilot program in section 8(d)(17) of the Small Business Act. In this environment, when a Federal agency creates a procurement opportunity requiring an offeror to provide examples of past performance, a newer small business concern may forego the opportunity because it individually lacks the required number of examples and then opt to join an established prime contractor's team as a subcontractor.

The most significant benefit of this final rule to small businesses is that it enhances the small businesses' ability to compete for Federal contracting opportunities. The Federal Acquisition Regulation (FAR) states that ''past performance, except as set forth in paragraph (c)(3)(iii) of this section, shall be evaluated in all source selections for negotiated competitive acquisitions expected to exceed the simplified acquisition threshold.'' See FAR 15.304(c)(3)(i). FAR 15.305(a)(2)(iv) provides that, ''[i]n the case of an offeror without a record of relevant past performance or for whom information on past performance is not available, the offeror may not be evaluated favorably or unfavorably on past performance.'' Nevertheless, small businesses without past experience as prime contractors may forego seeking some Federal contracting opportunities. This enhancement of Federal contracting opportunities is consistent with the amendment of the Small Business Act, which states that ''procurement strategies used by a Federal department or agency having contract authority shall facilitate the maximum participation of small business concerns as prime contractors, subcontractors, and suppliers.'' 15 U.S.C. 644(e)(1).

With more small businesses able to demonstrate past performance, agencies will have a larger pool of small businesses competing for contracting opportunities. This added competition may result in lower prices to the Government. SBA cannot quantify this impact prior to proposal of applicable FAR rules.

Costs of this final rule to the private sector include the prime contractor's provision, upon request to provide a past performance rating. The time burden of this requirement to the prime contractor is similar to that of the pilot program's past performance rating requirement. SBA estimates the fulfillment of a past performance request to require about 30 minutes of time. Assuming that a compilation of a rating of past performance involves 30 minutes of work by an employee of the prime contractor and valuing the time at $93.44 per hour,[1] SBA estimates that each rating request costs a prime contractor $46.72 in labor plus de minimis costs of transmission of the rating. There were approximately 34,000 individual subcontracting plans with 24,000 at the prime contract level in fiscal year 2015 (81 FR 94249), but it is not known how many small businesses were involved in these subcontracting plans or how many small businesses were involved in multiple subcontracting plans. SBA notes that 1,800 small businesses have active SBA-approved Mentor-Protégé agreements.[2] SBA also notes that in FY 2019, the Electronic Subcontracting Reporting System (eSRS) listed 2,082 commercial plans with small businesses.

Assuming half, or 900, of the small businesses with active agreements in the Mentor-Protégé program request a rating of past performance each year, the annual cost to the private sector of fulfilling these requests for past performance ratings would be $42,048 plus de minimis costs. Assuming small businesses with 10 percent of 24,000 subcontracting plans at the prime contract level, in addition to those in the Mentor-Protégé program, request a rating of past performance each year, the annual cost to the private sector of fulfilling these requests is $112,128. Assuming each of the 2,082 commercial plans has two to four subcontracts, and half of the total subcontracts represents small business that would request a past performance rating each year, then the annual cost to the private sector of fulfilling these requests would be $145,907 plus de minimis costs. With these assumptions, total annual costs to the private sector of fulfilling requests is $300,083 plus de minimis costs.

The requirement of small business offerors that have been members of joint ventures to identify the joint venture, identify the contract(s) of the joint venture, and describe duties or responsibilities as a joint venture member in order to receive consideration of past performance involves a resource cost to the small business offerors that compile the specified information. SBA notes that this cost would be voluntarily incurred by small businesses that assess the enhancement of Federal contracting opportunities from consideration of past performance to be of greater value than the incremental costs incurred.

If more small businesses meet past performance standards and then submit proposals to contracting agencies, administrative costs to the Government may increase when a contracting agency reviews an increased number of proposals and past performance ratings. SBA cannot quantify these costs and notes that increased competition may offset these costs to the Government.

The ability of more small businesses to demonstrate past performance may redistribute some Federal contracts from businesses that can demonstrate past performance in the baseline scenario that exists with no implementation of the pilot program. This redistribution would not affect overall economic activity. This final rule and its effects do not change the amount of dollars in all available Federal contracts. SBA cannot quantify the actual outcome of the gains and losses from the redistribution of contracts among different groups of small businesses that would result from an increased number of small businesses with the ability to demonstrate their experience and past performance, but it expects that competition from small businesses with newly established past performance ratings may displace some small businesses that had established ratings in Federal contracting opportunities. A partial offset of this transfer impact among small businesses may occur with increased numbers of contracts set aside for small businesses through the Rule of Two, which states there is a reasonable expectation that the contracting officer will obtain offers from at least two small businesses and award will be made at fair market price.

3. *What are the alternatives to this rule?*

This final rule implements specific statutory provisions in Section 868 of the NDAA FY 2021. There are no alternatives that would meet the statutory requirements.

Executive Order 12988

This final rule meets applicable standards set forth in sections 3(a) and 3(b)(2) of Executive Order 12988, Civil Justice Reform, to minimize litigation, eliminate ambiguity, and reduce burden. The action does not have retroactive or preemptive effect.

Executive Order 13132

This final rule does not have federalism implications as defined in Executive Order 13132. It will not have substantial direct effects on the States, on the relationship between the National Government and the States, or on the distribution of power and responsibilities among the various levels of government, as specified in the Executive Order. As such it does not warrant the preparation of a Federalism Assessment.

[1] The median hourly wage for construction managers is $46.72, according to 2020 Bureau of Labor Statistics (BLS) data, and the hourly rate of $93.44 includes 100 percent more for benefits and overhead. Source for hourly rate: *https://www.bls.gov/ooh/management/construction-managers.htm.* Retrieved June 8, 2021.

[2] One of the goals of the SBA's Mentor-Protégé program is to promote the ability of small protégé businesses to successfully compete for government contracting opportunities. Protégé small businesses often form joint ventures with their mentors to pursue specific procurement requirements in order to gain experience and be able independently perform similar requirements in the future.

Executive Order 13175

This final rule does not have tribal implications under Executive Order 13175, Consultation and Coordination with Indian Tribal Governments, because it would not have a substantial direct effect on one or more Indian tribes, on the relationship between the Federal Government and Indian tribes, or on the distribution of power and responsibilities between the Federal Government and Indian tribes.

Executive Order 13563

This Executive Order directs agencies to, among other things: (a) afford the public a meaningful opportunity to comment through the internet on proposed regulations, with a comment period that should generally consist of not less than 60 days; (b) provide for an ''open exchange'' of information among government officials, experts, stakeholders, and the public; and (c) seek the views of those who are likely to be affected by the rulemaking, even before issuing a notice of proposed rulemaking. As far as practicable or relevant, SBA considers these requirements in developing this rule, as discussed below.

1. Did the agency use the best available techniques to quantify anticipated present and future costs when responding to E.O. 12866 (*e.g.,* identifying changing future compliance costs that might result from technological innovation or anticipated behavioral changes)?

To the extent possible the Agency utilized the most recent data available in the Federal Procurement Data System-Next Generation, System for Award Management, and Electronic Subcontracting Reporting System.

2. *Public participation*: Did the agency: (a) Afford the public a meaningful opportunity to comment through the internet on any proposed regulation, with a comment period that should generally consist of not less than 60 days; (b) provide for an ''open exchange'' of information among Government officials, experts, stakeholders, and the public; (c) provide timely online access to the rulemaking docket on *Regulations.gov*; and (d) seek the views of those who are likely to be affected by rulemaking, even before issuing a notice of proposed rulemaking?

The proposed rule had a 60-day comment period and was posted on *www.regulations.gov* to allow the public to comment meaningfully on its provisions. SBA received comments from 15 commenters in response to the Proposed Rule. SBA has reviewed all the comments while drafting this final rule. SBA submitted the final rule to OMB for interagency review.

3. *Flexibility*: Did the agency identify and consider regulatory approaches that reduce burdens and maintain flexibility and freedom of choice for the public?

Yes, the final rule implements statutory provisions that provide new methods for small business government contractors to obtain past performance ratings to be used with offers on prime contracts with the Federal Government. The final rule updates the requirements for small business subcontracting plans to add a requirement for prime contractors to provide past performance to a small business, first-tier subcontractor when requested by the small business first-tier subcontractor. The final rule enhances the small business' ability to compete for Federal Government prime contracting opportunities.

Congressional Review Act

Subtitle E of the Small Business Regulatory Enforcement Fairness Act of 1996 (codified at 5 U.S.C. 801–808), also known as the Congressional Review Act or CRA, generally provides that before a rule may take effect, the agency promulgating the rule must submit a rule report, which includes a copy of the rule, to each House of the Congress and to the Comptroller General of the United States. SBA will submit a report containing this rule and other required information to the U.S. Senate, the U.S. House of Representatives, and the Comptroller General of the United States. A major rule under the CRA cannot take effect until 60 days after it is published in the **Federal Register**. OMB's Office of Information and Regulatory Affairs has determined that this rule is not a ''major rule'' as defined by 5 U.S.C. 804(2).

Paperwork Reduction Act

This rule updates the requirements for small business subcontracting plans to add a requirement for prime contractors to provide past performance ratings to a first-tier small business subcontractor when requested. A FAR rule implementing this requirement will account for the additional burden in its existing information collection and clearance for the information collection will be obtained by the GSA for the FAR Council.

In this final rule, SBA provides for a small business concern to receive past performance consideration for the past performance of a joint venture of which the small business was a member. This does not require a new information collection because the burden is already accounted for when the Government contracting officer rates the joint venture entity serving as a prime contractor.

Regulatory Flexibility Act, 5 U.S.C. 601–612

The Regulatory Flexibility Act (RFA), 5 U.S.C. 601, requires administrative agencies to consider the effect of their actions on small entities, small nonprofit enterprises, and small local governments. Pursuant to the RFA, when an agency issues a rulemaking, the agency must prepare a regulatory flexibility analysis which describes the impact of the rule on small entities. However, section 605 of the RFA allows an agency to certify a rule, in lieu of preparing an analysis if the rulemaking is not expected to have a significant economic impact on a substantial number of small entities. The RFA defines ''small entity'' to include ''small businesses,'' ''small organization,'' and ''small governmental jurisdictions.''

This final rule provides new methods for small business contractors to obtain past performance ratings to be used with offers on prime contracts. As such, the rule relates to small business concerns but would not affect ''small organizations'' or ''small governmental jurisdictions'' because those programs generally apply only to ''business concerns'' as defined by SBA regulations; in other words, to small businesses organized for profit. ''Small organizations'' or ''small governmental jurisdictions'' are non-profits or governmental entities and do not generally qualify as ''business concerns'' within the meaning of SBA's regulations.

There are approximately 1,800 active SBA-approved Mentor-Protégé agreements and SBA estimates that half, or 900, small businesses with active agreements would request a past performance rating from its prime contractor in a year. Of the 24,000 subcontracting plans at the prime contract level in fiscal year 2015, SBA assumes for this analysis that up to 2,400 that are not in the Mentor-Protégé program may request a past performance rating each year. Additionally, in FY 2019 there were 2,082 commercial plans with small businesses. Assuming two to four subcontracts for each commercial plan, and half of them request a past performance rating, SBA estimates that up to 3,123 small businesses involved in commercial plans may request a past performance rating each year. The changes allow small business contractors to request a past performance rating from a prime contractor for whom they performed

work as a first-tier subcontractor or as a member of a joint venture. In addition, the final rule updates the requirements for small business subcontracting plans to add a responsibility for prime contractors to provide past performance of the first-tier when requested by that first-tier subcontractor.

As a result, SBA does not believe the final rule would have a disparate impact on small businesses or would impose any additional significant costs. For the reasons discussed, SBA certifies that this final rule does not have a significant economic impact on a substantial number of small business concerns.

List of Subjects in 13 CFR Part 125

Government contracts, Government procurement, Reporting and recordkeeping requirements, Small business subcontracting, Small businesses.

For the reasons stated in the preamble, SBA amends 13 CFR part 125 as follows:

PART 125—GOVERNMENT CONTRACTING PROGRAMS

■ 1. The authority citation for part 125 continues to read as follows:

Authority: 15 U.S.C. 632(p), (q), 634(b)(6), 637, 644, 657b, 657(f), and 657r.

■ 2. Amend § 125.3 by:
■ a. Removing the word ''and'' at the end of paragraphs (c)(1)(ix) and (x);
■ b. Removing the period at the end of paragraph (c)(1)(xi) and adding ''; and'' in its place; and
■ c. Adding paragraph (c)(1)(xii).

The addition reads as follows:

§ 125.3 What types of subcontracting assistance are available to small businesses?

* * * * *

(c) * * *

(1) * * *

(xii)(A) The prime contractor, upon request from a first-tier small business subcontractor, shall provide the subcontractor with a rating of the subcontractor's past performance. The prime contractor must provide the small business subcontractor the requested rating within 15 calendar days of the request. The rating provided by the prime contractor to the first-tier small business subcontractor shall utilize the five-scale ratings system found in FAR 42.1503 (48 CFR 42.1503): Exceptional, Very Good, Satisfactory, Marginal, and Unsatisfactory. If the subcontractor will use the rating for an offer on a prime contract, it must include, at a minimum, the following evaluation factors in the requested rating:

(*1*) Technical (quality of product or service);

(*2*) Cost control (not applicable for firm-fixed-price or fixed-price with economic price adjustment arrangements);

(*3*) Schedule/timeliness;

(*4*) Management or business relations; and

(*5*) Other (as applicable).

(B) The requirement in paragraph (c)(1)(xii)(A) of this section is not subject to the flow-down in paragraph (c)(1)(x) of this section.

(C) A first-tier small business subcontractor must make the request for a performance rating from the prime contractor within 30 calendar days after the completion of the period of performance for the prime contractor's contract with the Government. The prime contractor and the first-tier small business subcontractor may negotiate a later deadline for the request for a performance rating, but in no case can the prime contractor impose a deadline earlier than 30 calendar days after the completion of the period of performance for the prime contractor's contract with the Government.

(D) The rating provided by the prime contractor to the first-tier small business subcontractor shall utilize the five-scale ratings system found in FAR 42.1503 (48 CFR 42.1503): Exceptional, Very Good, Satisfactory, Marginal, and Unsatisfactory.

* * * * *

§ § 125.11 through 125.14 [Redesignated as §§ 125.12 through 125.15]

■ 3. Redesignate §§ 125.11 through 125.14 as §§ 125.12 through 125.15.

■ 4. Add new § 125.11 before subpart A to read as follows:

§ 125.11 Past performance ratings for certain small business concerns.

(a) *General.* In accordance with sections 15(e)(5) and 8(d)(17) of the Small Business Act, agencies are required to consider the past performance of certain small business offerors that have been members of joint ventures or have been first-tier subcontractors. The agencies shall consider the small business' past performance for the evaluated contract or order similarly to a prime-contract past performance.

(b) *Small business concerns that have been members of joint ventures*—(1) *Joint venture past performance.* (i) When submitting an offer for a prime contract, a small business concern that has been a member of a joint venture may elect to use the experience and past performance of the joint venture (whether or not the other joint venture partners were small business concerns) where the small business does not independently demonstrate past performance necessary for award. The small business concern, when making such an election, shall:

(A) Identify to the contracting officer the joint venture of which the small business concern is or was a member;

(B) Identify the contract or contracts of the joint venture that the small business elects to use for its experience and past performance for the prime contract offer; and

(C) Inform the contracting officer what duties and responsibilities the concern carried out or is carrying out as part of the joint venture.

(ii) A small business cannot identify and use as its own experience and past performance work that was performed exclusively by other partners to the joint venture.

(2) *Evaluation.* When evaluating the past performance of a small business concern that has submitted an offer on a prime contract, the contracting officer shall consider the joint venture past performance that the concern elected to use under paragraph (b)(1) of this section, giving due consideration to the information provided under paragraph (b)(1)(i)(C) of this section for the performance of the evaluated contract or order. This includes where the small business concern lacks a past performance rating as a prime contractor in the Contractor Performance Assessment Reporting System, or successor system used by the Federal Government to monitor or rate contractor past performance.

(c) *Small business concerns that have performed as first-tier subcontractors*—(1) *Responsibility of prime contractors.* A small business concern may request a rating of its subcontractor past performance from the prime contractor for a contract on which the concern was a first-tier subcontractor and which included a subcontracting plan. The prime contractor shall provide the rating to the small business concern within 15 calendar days of the request. The rating provided by the prime contractor to the first-tier small business subcontractor shall utilize the five-scale ratings system found in FAR 42.1503 (48 CFR 42.1503): Exceptional, Very Good, Satisfactory, Marginal, and Unsatisfactory. The prime contractor must include, at a minimum, the following evaluation factors in the requested rating:

(i) Technical (quality of product or service);

(ii) Cost control (not applicable for firm-fixed-price or fixed-price with economic price adjustment arrangements);

(iii) Schedule/timeliness;

(iv) Management or business relations; and

(v) Other (as applicable).

(2) *Responsibility of first-tier small business subcontractors.* A first-tier small business subcontractor must make the request for a performance rating from the prime contractor within 30 days after the completion of the period of performance for the prime contractor's contract with the Government. However, the prime contractor and the first-tier small business subcontractor may negotiate a later deadline for the request for a performance rating, but in no case can the prime contractor impose a deadline earlier than 30 days after the completion of the period of performance for the prime contractor's contract with the Government. The subcontractor may notify the contracting officer in the event that the prime contractor does not comply with its responsibility to submit a timely rating.

(3) *Joint ventures that performed as first-tier subcontractors.* A small business member of a joint venture may request a past performance rating under paragraph (c)(1) of this section, where a joint venture performed as a first-tier subcontractor. The joint venture member may then submit the subcontractor past performance rating to a procuring agency in accordance with paragraph (b) of this section.

(4) *Evaluation.* When evaluating the past performance of a small business concern that elected to use a rating for its offer on a prime contract, a contracting officer shall consider the concern's experience and rating of past performance as a first-tier subcontractor. This includes where the small business concern lacks a past performance rating as a prime contractor in the Contractor Performance Assessment Reporting System (CPARS), or successor system used by the Federal Government to monitor or rate contractor past performance.

§ 125.28 [Amended]

■ 5. Amend § 125.28 in paragraph (a) by removing ''§ 125.15(a)'' and adding ''§ 125.18(a)'' in its place.

§ 125.29 [Amended]

■ 6. Amend § 125.29 in paragraph (a) by removing ''§ 125.8'' and adding ''§ 125.12'' in its place.

§ 125.30 [Amended]

■ 7. Amend § 125.30 in paragraph (g)(4) by removing ''§ 125.8'' and adding ''§ 125.12'' in its place.

Isabella Casillas Guzman,

Administrator.

[FR Doc. 2022–15622 Filed 7–21–22; 8:45 am]

BILLING CODE 8026–09–P

DEPARTMENT OF HOMELAND SECURITY

U.S. Customs and Border Protection

19 CFR Part 122

[CBP Dec. 22–16]

Technical Amendment to List of User Fee Airports: Addition of Four Airports, Removal of Two Airports

AGENCY: U.S. Customs and Border Protection; DHS.

ACTION: Final rule; technical amendment.

SUMMARY: This document amends U.S. Customs and Border Protection (CBP) regulations by revising the list of user fee airports. User fee airports are airports that have been approved by CBP to receive, for a fee, the customs services of CBP officers for processing aircraft, passengers, and cargo entering the United States, but do not qualify for designation as international or landing rights airports. Specifically, this technical amendment reflects the designation of user fee status for four additional airports: Coeur d'Alene Airport in Hayden, Idaho; Ithaca Tompkins Regional Airport in Ithaca, New York; University of Illinois-Willard Airport in Savoy, Illinois; and Sheboygan County Memorial Airport in Sheboygan Falls, Wisconsin. This document also amends CBP regulations by removing the designation of user fee status for two airports: Ardmore Industrial Airpark, in Ardmore, Oklahoma, and Decatur Airport in Decatur, Illinois.

DATES: Effective July 22, 2022.

FOR FURTHER INFORMATION CONTACT: Ryan Flanagan, Director, Alternative Funding Program, Office of Field Operations, U.S. Customs and Border Protection at *Ryan.H.Flanagan@cbp.dhs.gov* or 202–550–9566.

SUPPLEMENTARY INFORMATION:

Background

Title 19, part 122, of the Code of Federal Regulations (19 CFR part 122) sets forth regulations relating to the entry and clearance of aircraft engaged in international commerce and the transportation of persons and cargo by aircraft in international commerce.[1] Generally, a civil aircraft arriving from outside the United States must land at an airport designated as an international airport. Alternatively, civil aircraft may request permission to land at a specific airport and, if landing rights are granted, the civil aircraft may land at that landing rights airport.[2]

Section 236 of the Trade and Tariff Act of 1984 (Pub. L. 98–573, 98 stat. 2948, 2994 (1984)), codified at 19 U.S.C. 58b, created an alternative option for civil aircraft seeking to land at an airport that is neither an international airport nor a landing rights airport. This alternative option allows the Commissioner of U.S. Customs and Border Protection (CBP) to designate an airport, upon request by the airport authority or other sponsoring entity, as a user fee airport.[3] Pursuant to 19 U.S.C. 58b, a requesting airport may be designated as a user fee airport only if CBP determines that the volume or value of business at the airport is insufficient to justify the unreimbursed availability of customs services at the airport and the governor of the state in which the airport is located approves the designation. As the volume or value of business cleared through this type of airport is insufficient to justify the availability of customs services at no cost, customs services provided by CBP at the airport are not funded by appropriations from the general treasury of the United States. Instead, the user fee airport pays for the customs services provided by CBP. The user fee airport must pay the fees charged, which must be in an amount equal to the expenses

[1] For purposes of this technical rule, an ''aircraft'' is defined as any device used or designed for navigation or flight in air and does not include hovercraft. 19 CFR 122.1(a).

[2] A landing rights airport is ''any airport, other than an international airport or user fee airport, at which flights from a foreign area are given permission by Customs to land.'' 19 CFR 122.1(f).

[3] Sections 403(1) and 411 of the Homeland Security Act of 2002 (Pub. L. 107–296, 116 stat. 2135, 2178–79 (2002)), codified at 6 U.S.C. 203(1) and 211, transferred certain functions, including the authority to designate user fee facilities, from the U.S. Customs Service of the Department of the Treasury to the U.S. Department of Homeland Security. The Secretary of Homeland Security delegated the authority to designate user fee facilities to the Commissioner of CBP through Department of Homeland Security Delegation, Sec. II.A., No. 7010.3 (May 11, 2006). The Commissioner subsequently delegated this authority to the Executive Assistant Commissioner (EAC) of the Office of Field Operations, on March 23, 2020, to designate new UFFs. On December 23, 2020, the broader authority to withdraw a facility's designation as a UFF, as well as execute, amend, or terminate Memorandum of Agreements, was also delegated to the EAC of the Office of Field Operations.

incurred by CBP in providing customs and related services at the user fee airport, including the salary and expenses of CBP employees to provide such services. *See* 19 U.S.C. 58b; *see also* 19 CFR 24.17(a)–(b).

CBP designates airports as user fee airports in accordance with 19 U.S.C. 58b and 19 CFR 122.15 on a case-by-case basis. If CBP decides that the conditions for designation as a user fee airport are satisfied, a Memorandum of Agreement (MOA) is executed between the Commissioner of CBP and the sponsor of the user fee airport. Pursuant to 19 CFR 122.15(c), the designation of an airport as a user fee airport must be withdrawn if either CBP or the airport authority gives 120 days written notice of termination to the other party or if any amounts due to CBP are not paid on a timely basis.

The list of designated user fee airports is set forth in 19 CFR 122.15(b). Periodically, CBP updates the list to include newly designated airports that were not previously on the list, to reflect any changes in the names of the designated user fee airports, and to remove airports that are no longer designated as user fee airports.

Recent Changes Requiring Updates to the List of User Fee Airports

This document updates the list of user fee airports in 19 CFR 122.15(b) by adding the following four airports: Coeur d'Alene Airport in Hayden, Idaho; Ithaca Tompkins Regional Airport in Ithaca, New York; University of Illinois-Willard Airport in Savoy, Illinois; and Sheboygan County Memorial Airport in Sheboygan Falls, Wisconsin. CBP has signed MOAs with the respective airport authorities designating each of these four airports as a user fee airport.[4]

Additionally, this document updates the list of user fee airports in 19 CFR 122.15(b) by removing two airports: Ardmore Industrial Airpark in Ardmore, Oklahoma and Decatur Airport in Decatur, Illinois. The airport authority of Ardmore Industrial Airpark requested to terminate its user fee status on March 19, 2020, and the airport authority and CBP mutually agreed to terminate the user fee status of Ardmore Industrial Airpark effective on July 17, 2020. The airport authority of Decatur Airport requested to terminate its user fee status on July 17, 2019, and the airport authority and CBP mutually agreed to terminate the user fee status of Decatur Airport effective on November 13, 2019.

Inapplicability of Public Notice and Delayed Effective Date Requirements

Under the Administrative Procedure Act (5 U.S.C. 553(b)), an agency is exempted from the prior public notice and comment procedures if it finds, for good cause, that such procedures are impracticable, unnecessary, or contrary to the public interest. This final rule makes conforming changes by updating the list of user fee airports to add four airports that have already been designated by CBP as user fee airports and by removing two airports for which CBP has withdrawn the user fee airport designation, in accordance with 19 U.S.C. 58b. Because this conforming rule has no substantive impact, is technical in nature, and does not impose additional burdens on or take away any existing rights or privileges from the public, CBP finds for good cause that the prior public notice and comment procedures are impracticable, unnecessary, and contrary to the public interest. For the same reasons, pursuant to 5 U.S.C. 553(d)(3), a delayed effective date is not required.

Regulatory Flexibility Act and Executive Order 12866

Because no notice of proposed rulemaking is required, the provisions of the Regulatory Flexibility Act (5 U.S.C. 601 *et seq.*) do not apply. This amendment does not meet the criteria for a ''significant regulatory action'' as specified in Executive Order 12866.

Paperwork Reduction Act

There is no new collection of information required in this document; therefore, the provisions of the Paperwork Reduction Act of 1995 (44 U.S.C. 3507) are inapplicable.

Signing Authority

This document is limited to a technical correction of CBP regulations. Accordingly, it is being signed under the authority of 19 CFR 0.1(b). Commissioner Chris Magnus, having reviewed and approved this document, is delegating the authority to electronically sign this document to Robert F. Altneu, who is the Director of the Regulations and Disclosure Law Division for CBP, for purposes of publication in the **Federal Register**.

List of Subjects in 19 CFR Part 122

Air carriers, Aircraft, Airports, Customs duties and inspection, Freight.

Amendments to Regulations

Part 122 of title 19 of the Code of Federal Regulations (19 CFR part 122) is amended as set forth below:

PART 122—AIR COMMERCE REGULATIONS

■ 1. The general authority citation for part 122 continues to read as follows:

Authority: 5 U.S.C. 301; 19 U.S.C. 58b, 66, 1431, 1433, 1436, 1448, 1459, 1590, 1594, 1623, 1624, 1644, 1644a, 2071 note.

* * * * *

■ 2. In § 122.15, amend the table in paragraph (b) as follows:

■ a. Remove the entries for ''Ardmore, Oklahoma'' and ''Decatur, Illinois''; and

■ b. Add entries in alphabetical order for ''Hayden, Idaho'', ''Ithaca, New York'', ''Savoy, Illinois'', and ''Sheboygan Falls, Wisconsin''.

The additions read as follows:

§ 122.15 User fee airports.

* * * * *

(b) * * *

Location	Name
* * * * *	
Hayden, Idaho	Coeur d'Alene Airport.
Ithaca, New York	Ithaca Tompkins Regional Airport.
* * * * *	
Savoy, Illinois	University of Illinois-Willard Airport.
* * * * *	
Sheboygan Falls, Wisconsin.	Sheboygan County Memorial Airport.
* * * * *	

* * * * *

Date: July 18, 2022.

Robert F. Altneu,

Director, Regulations & Disclosure, Law Division, Regulations & Rulings, Office of Trade, U.S. Customs and Border Protection.

[FR Doc. 2022–15678 Filed 7–21–22; 8:45 am]

BILLING CODE 9111–14–P

[4] The Executive Assistant Commissioner of the Office of Field Operations Pete Flores signed a MOA designating Coeur d'Alene Airport on May 6, 2022. Then-Acting Commissioner Mark A. Morgan signed an MOA designating University of Illinois-Willard Airport on February 25, 2020. Then-Executive Assistant Commissioner of the Office of Field Operations Todd C. Owen signed MOAs designating Ithaca Tompkins Regional Airport on June 26, 2020 and Sheboygan County Memorial Airport on May 21, 2020.

DEPARTMENT OF HOMELAND SECURITY

Coast Guard

33 CFR Part 165

[Docket Number USCG–2022–0616]

RIN 1625–AA00

Safety Zone; Fairport Harbor, Fairport, OH

AGENCY: Coast Guard, DHS.

ACTION: Temporary final rule.

SUMMARY: The Coast Guard is establishing a temporary safety zone for all navigable waters of Fairport Harbor, OH. The safety zone is necessary and intended to protect personnel, vessels, and the marine environment from hazards created by shoaling in the area.

DATES: This rule is effective without actual notice July 22, 2022 through November 15, 2022. For enforcement purposes, actual notice will be used from July 15, 2022, until July 22, 2022.

ADDRESSES: To view documents mentioned in this preamble as being available in the docket, go to *https://www.regulations.gov,* type USCG–2022–0616 in the ''SEARCH'' box and click ''SEARCH.'' Next, in the Document Type column, select ''Supporting & Related Material.''

FOR FURTHER INFORMATION CONTACT: If you have questions on this rule, call or email LT Jared Stevens, Waterways Management Division, U.S. Coast Guard; telephone 216–937–0124, email *D09–SMB–MSUCleveland–WWM@uscg.mil.*

SUPPLEMENTARY INFORMATION:

I. Table of Abbreviations

CFR Code of Federal Regulations
DHS Department of Homeland Security
FR Federal Register
NPRM Notice of proposed rulemaking
§ Section
U.S.C. United States Code

II. Background Information and Regulatory History

The Coast Guard is issuing this temporary rule without prior notice and opportunity to comment pursuant to authority under section 4(a) of the Administrative Procedure Act (APA) (5 U.S.C. 553(b)). This provision authorizes an agency to issue a rule without prior notice and opportunity to comment when the agency for good cause finds that those procedures are ''impracticable, unnecessary, or contrary to the public interest.'' Under 5 U.S.C. 553(b)(B), the Coast Guard finds that good cause exists for not publishing a notice of proposed rulemaking (NPRM) with respect to this rule because the Coast Guard has learned that significant shoaling has developed in the vicinity of the navigational channel, and the nature and location of the shoaling presents an imminent hazard to navigation. The safety zone must be established as soon as possible for the safety of all personnel, vessels, and the marine environment; thus, it is impracticable to publish an NPRM.

Under 5 U.S.C. 553(d)(3), the Coast Guard finds that good cause exists for making this rule effective less than 30 days after publication in the **Federal Register**. Delaying the effective date of this rule would be impracticable because immediate action is needed in order to mitigate the safety hazards associated with the shoaling in Fairport Harbor.

III. Legal Authority and Need for Rule

The Coast Guard is issuing this rule under authority in 46 U.S.C. 70034 (previously 33 U.S.C. 1231), 46 U.S.C 70051; 33 CFR 1.05–1, 6.04–1, 6.04–6, and 160.5; Department of Homeland Security Delegation No. 00170.1, Revision No. 01.2. The Captain of the Port (COTP) Buffalo has determined that the hazards associated with shoaling in Fairport Harbor, OH are a safety concern for all marine traffic. This rule is necessary to protect personnel, vessels, and the marine environment in the navigable waters within the safety zone until dredging can be completed in accordance with the U.S. Army Corps of Engineers' approved project depth for the federally maintained sections of the waterway.

IV. Discussion of the Rule

This rule establishes a safety zone for all federally maintained waters of Fairport Harbor, OH. The duration of the safety zone is intended to protect personnel, vessels, and the marine environment in these navigable waters while the federally maintained channel is dredged in accordance with the approved U.S. Army Corps of Engineers federal project depths. All vessels are prohibited from transiting the safety zone with an under keel clearance of less than one (1) foot and six (6) inches. Every vessel's under keel clearance shall be verified by the master prior to entry and departure from Fairport Harbor, OH. Further, draft readings shall be documented and retained on board. Additionally, vessels greater than 100 Gross Registered Tons shall not meet or pass another vessel while navigating within the safety zone.

The most recent U.S. Army Corps of Engineers project condition surveys and hydrological surveys can be found on their website: *https://www.lrb.usace.army.mil/Library/Maps-and-Charts/.*

V. Regulatory Analyses

We developed this rule after considering numerous statutes and Executive orders related to rulemaking. Below we summarize our analyses based on a number of these statutes and Executive orders, and we discuss First Amendment rights of protestors.

A. Regulatory Planning and Review

Executive Orders 12866 and 13563 direct agencies to assess the costs and benefits of available regulatory alternatives and, if regulation is necessary, to select regulatory approaches that maximize net benefits. This rule has not been designated a ''significant regulatory action,'' under Executive Order 12866. Accordingly, this rule has not been reviewed by the Office of Management and Budget (OMB).

This regulatory action determination is based on the size, location, and duration of the safety zone. Moreover, the Coast Guard will issue a Broadcast Notice to Mariners via VHF–FM marine channel 16 regarding the safety zone, and this regulatory action allows vessel traffic to transit within and around the safety zone under the conditions outlined in this rulemaking.

B. Impact on Small Entities

The Regulatory Flexibility Act of 1980, 5 U.S.C. 601–612, as amended, requires Federal agencies to consider the potential impact of regulations on small entities during rulemaking. The term ''small entities'' comprises small businesses, not-for-profit organizations that are independently owned and operated and are not dominant in their fields, and governmental jurisdictions with populations of less than 50,000. The Coast Guard certifies under 5 U.S.C. 605(b) that this rule will not have a significant economic impact on a substantial number of small entities.

While some owners or operators of vessels intending to transit the safety zone may be small entities, for the reasons stated in section V.A above, this rule will not have a significant economic impact on any vessel owner or operator.

Under section 213(a) of the Small Business Regulatory Enforcement Fairness Act of 1996 (Pub. L. 104–121), we want to assist small entities in understanding this rule. If the rule would affect your small business, organization, or governmental jurisdiction and you have questions

concerning its provisions or options for compliance, please call or email the person listed in the **FOR FURTHER INFORMATION CONTACT** section.

Small businesses may send comments on the actions of Federal employees who enforce, or otherwise determine compliance with, Federal regulations to the Small Business and Agriculture Regulatory Enforcement Ombudsman and the Regional Small Business Regulatory Fairness Boards. The Ombudsman evaluates these actions annually and rates each agency's responsiveness to small business. If you wish to comment on actions by employees of the Coast Guard, call 1–888–REG–FAIR (1–888–734–3247). The Coast Guard will not retaliate against small entities that question or complain about this rule or any policy or action of the Coast Guard.

C. Collection of Information

This rule will not call for a new collection of information under the Paperwork Reduction Act of 1995 (44 U.S.C. 3501–3520).

D. Federalism and Indian Tribal Governments

A rule has implications for federalism under Executive Order 13132, Federalism, if it has a substantial direct effect on the States, on the relationship between the National Government and the States, or on the distribution of power and responsibilities among the various levels of government. We have analyzed this rule under that Order and have determined that it is consistent with the fundamental federalism principles and preemption requirements described in Executive Order 13132.

Also, this rule does not have tribal implications under Executive Order 13175, Consultation and Coordination with Indian Tribal Governments, because it does not have a substantial direct effect on one or more Indian tribes, on the relationship between the Federal Government and Indian tribes, or on the distribution of power and responsibilities between the Federal Government and Indian tribes.

E. Unfunded Mandates Reform Act

The Unfunded Mandates Reform Act of 1995 (2 U.S.C. 1531–1538) requires Federal agencies to assess the effects of their discretionary regulatory actions. In particular, the Act addresses actions that may result in the expenditure by a State, local, or tribal government, in the aggregate, or by the private sector of $100,000,000 (adjusted for inflation) or more in any one year. Though this rule will not result in such an expenditure, we do discuss the effects of this rule elsewhere in this preamble.

F. Environment

We have analyzed this rule under Department of Homeland Security Directive 023–01, Rev. 1, associated implementing instructions, and Environmental Planning COMDTINST 5090.1 (series), which guide the Coast Guard in complying with the National Environmental Policy Act of 1969 (42 U.S.C. 4321–4370f), and have determined that this action is one of a category of actions that do not individually or cumulatively have a significant effect on the human environment. This rule involves a safety zone lasting approximately 120 days, or until cancelled. This rule requires all vessels to maintain a minimum of one (1) foot and six (6) inches under keel clearance while transiting the safety zone. Every vessel's under keel clearance shall be verified by the master prior to entry and departure from Fairport Harbor, OH. Further, draft readings shall be documented and retained on board. Additionally, vessels greater than 100 Gross Registered Tons shall not meet or pass another vessel while navigating within the safety zone. It is categorically excluded from further review under paragraph L60(a) of Appendix A, Table 1 of DHS Instruction Manual 023–01–001–01, Rev. 1. A Record of Environmental Consideration supporting this determination is available in the docket. For instructions on locating the docket, see the **ADDRESSES** section of this preamble.

G. Protest Activities

The Coast Guard respects the First Amendment rights of protesters. Protesters are asked to call or email the person listed in the **FOR FURTHER INFORMATION CONTACT** section to coordinate protest activities so that your message can be received without jeopardizing the safety or security of people, places, or vessels.

List of Subjects in 33 CFR Part 165

Marine safety, Navigation (water), Reporting and recordkeeping requirements, Waterways.

For the reasons discussed in the preamble, the Coast Guard amends 33 CFR part 165 as follows:

PART 165—SAFETY OF LIFE ON NAVIGABLE WATERS

■ 1. The authority citation for part 165 continues to read as follows:

Authority: 46 U.S.C. 70034, 70051; 33 CFR 1.05, 6.04–1, 6.04–6, and 160.5; Department of Homeland Security Delegation No. 00170.1, Revision No. 01.2

■ 2. Add § 165.T09–0616 to read as follows:

§ 165.T09–0616 Fairport Harbor Shoaling, Fairport, OH.

(a) *Location.* The following area is a safety zone: all federally maintained waters within Fairport Harbor, OH.

(b) *Definitions. Official Patrol Vessel* means a Coast Guard Patrol Commander, including a Coast Guard coxswain, petty officer, or other officer operating a Coast Guard vessel and a Federal, State, and local officer designated by or assisting the COTP Buffalo in the enforcement of the regulations in this section.

(c) *Regulations.* (1) All vessels are required to maintain a minimum of one (1) foot and six (6) inches under keel clearance while transiting the safety zone.

(2) The under keel clearance shall be verified by the vessel's master prior to entry and departure from Fairport Harbor, OH. Draft readings and under keel clearance shall be documented and retained on board, and be readily available for verification upon request by the U.S. Coast Guard.

(3) Vessels greater than 100 Gross Registered Tons shall not meet nor pass another vessel while navigating within the safety zone.

(4) The Coast Guard may patrol the safety zone under the direction of a designated Coast Guard Patrol Commander. The Patrol Commander may be contacted on Channel 16 VHF–FM (156.8 MHz) by the call sign ''PATCOM.''

(5) No vessel shall anchor, block, loiter, or impede the through transit of vessels in the regulated area during the effective dates and times, unless cleared by or through an official patrol vessel. The Patrol Commander may forbid and control the movement of all vessels in the regulated area. When hailed or signaled by an official patrol vessel, a vessel shall comply with the directions given. Failure to do so may result in expulsion from the area, citation for failure to comply, or both.

(6) Any vessel may anchor outside the regulated areas specified in this chapter, but may not anchor in, block, or loiter in a navigable channel.

(7) The Patrol Commander may terminate the operation of any vessel at any time it is deemed necessary for the protection of life or property.

(8) The Patrol Commander will terminate enforcement of the special regulations upon satisfactory completion of dredging operations in

consultation with U.S. Army Corps of Engineers and the COTP Buffalo.

(d) *Enforcement period.* This safety zone will be enforced from July 15, 2022, until November 15, 2022.

Dated: July 15, 2022.

M.I. Kuperman,

Captain, U.S. Coast Guard, Captain of the Port Buffalo.

[FR Doc. 2022–15565 Filed 7–21–22; 8:45 am]

BILLING CODE 9110–04–P

LIBRARY OF CONGRESS

Copyright Office

37 CFR Part 202

[Docket No. 2022–4]

Liberalizing the Deposit Requirements for Registering a Single Issue of a Serial Publication

AGENCY: U.S. Copyright Office, Library of Congress.

ACTION: Final rule.

SUMMARY: The U.S. Copyright Office is amending the rules for registering a single issue of a serial publication, such as an individual issue of a magazine or journal. Under the current regulations, two copies of the best edition are generally needed to register this type of work, and must be in a physical format if the issue was published in that form. The amended rule will liberalize the deposit requirements by letting copyright owners submit one copy of such works instead of two. It also gives copyright owners the option of uploading a digital copy through the electronic registration system, even if the issue was published in a physical format. Alternatively, copyright owners may mail one copy to the Office in a physical format, although mailing a physical copy will delay the examination of the claim and result in a later effective date of registration.

DATES: Effective August 22, 2022.

FOR FURTHER INFORMATION CONTACT: Suzanne V. Wilson, General Counsel and Associate Register of Copyrights, by email at *svwilson@copyright.gov,* or Robert J. Kasunic, Associate Register for Copyrights and Director of Registration Policy and Practice, by email at *rkas@copyright.gov.* Each person may be reached by telephone at 202–707–8050.

SUPPLEMENTARY INFORMATION:

Background

When Congress enacted the Copyright Act of 1976, it authorized the Register of Copyrights to issue regulations specifying administrative classes of works for the purpose of seeking a registration.[1] Pursuant to this authority, the Register established an administrative class for ''serials,'' known as Class SE.[2] For purposes of registration, a ''serial'' is defined as ''a work issued or intended to be issued in successive parts bearing numerical or chronological designations and intended to be continued indefinitely.'' [3] Examples of works that may qualify as a serial include issues of periodicals, newspapers, journals, and annuals.[4]

Section 408 of the Copyright Act states that an application for registration must be accompanied by ''two complete copies . . . of the best edition'' if the work has been published in the United States.[5] The ''best edition'' is defined as ''the edition, published in the United States at any time before the date of deposit, that the Library of Congress determines to be most suitable for its purposes.'' [6] Section 407 of the Copyright Act separately states that if a work has been published in this country, the copyright owner or the owner of the exclusive right of publication is required to deposit two complete copies of the best edition of that work with the Copyright Office within three months after publication.[7] This is known as the ''mandatory deposit requirement.''

Copies that are submitted to the Copyright Office to satisfy the section 407 mandatory deposit requirement are intended ''for the use or disposition of the Library of Congress.'' [8] Likewise, copies of published works that are submitted for registration under section 408 are made ''available to the Library of Congress for its collections.'' [9] To avoid duplication, section 408 specifies that copies deposited under section 407 ''may be used to satisfy the deposit provisions'' of section 408 ''if they are accompanied by the prescribed application and fee.'' [10]

Both sections 407 and 408 give the Register authority to issue regulations concerning the nature of the copies that must be deposited, and the ability to create exceptions to the deposit requirements set forth in the statute. Section 408 gives the Register authority to ''require or permit, for particular classes [of works], . . . the deposit of only one copy . . . where two would normally be required'' for copyright registration.[11] Similarly, section 407 gives the Register authority to issue regulations that ''require [the] deposit of only one copy'' for the purpose of mandatory deposit.[12]

The legislative history confirms that the Register may adjust the deposit requirements to reduce burdens on copyright owners and to improve efficiencies within the Copyright Office. In discussing the Register's authority under section 407, Congress made clear that the mandatory deposit requirement should be ''as flexible as possible, so that there will be no obligation to make deposits where it serves no purpose, so that only one copy . . . may be deposited where two are not needed, and so that reasonable adjustments can be made to meet practical needs in special cases.'' [13] Similarly, the legislative history for section 408 states that the ''[d]eposit of one copy . . . rather than two would probably be justifiable . . . in any case where the Library of Congress has no need for the deposit.'' [14]

In 2018, the Register exercised this authority to modify the mandatory deposit requirement for serials.[15] If a serial is published in the United States in a physical form, or in both a physical and electronic format, publishers are required to provide the Library with two complimentary subscriptions to that serial, unless they have been informed by the Office that the serial is not needed for the Library's collections.[16] By contrast, if a serial is published solely in electronic form, publishers have no affirmative obligation to provide a subscription, unless the Office issues a formal demand.[17]

Today, the Register exercises her authority to liberalize another deposit requirement related to serials, specifically for the registration of a single issue of a serial publication. First, the new rule lets copyright owners deposit one copy of the issue instead of two.[18] Second, it provides flexibility in

[1] 17 U.S.C. 408(c).

[2] 37 CFR 202.3(b)(1)(v).

[3] *Id.*

[4] *Id.*

[5] 17 U.S.C. 408(b)(2). If the work was first published in a foreign country but has not been published in the United States, the applicant must submit one complete copy of the foreign edition. *Id.* at 408(b)(3).

[6] *Id.* at 101.

[7] *Id.* at 407(a)(1), (b).

[8] *Id.* at 407(b).

[9] *Id.* at 704(b).

[10] *Id.* at 408(b).

[11] *Id.* at 408(c)(1).

[12] *Id.* at 407(c).

[13] H.R. Rep. No. 94–1476, at 151 (1976).

[14] *Id.* at 154.

[15] 83 FR 61546 (Nov. 30, 2018).

[16] 37 CFR 202.19(d)(2)(xi).

[17] *Id.* at 202.19(c)(5).

[18] The Office recently updated the regulations governing the deposit requirement for the group registration option for serial issues. 37 CFR 202.4(d)(3); 84 FR 60918 (Nov. 12, 2019); 83 FR 61546 (Nov. 30, 2018). Today's final rule only applies to claims involving a single issue of a serial

how to submit that copy to the Office. Under the current rules, if the issue was published solely in electronic format, copyright owners may upload one digital copy to the electronic registration system.[19] The new rule gives copyright owners of serials published in a physical formator in both a physical and electronic format the same ability to deposit an electronic copy for registration purposes. Copyright owners may still submit one physical copy, but as discussed below the inevitable additional time required for the Copyright Office to receive and process the copy will delay the examination of the claim and result in a later effective date of registration. To expedite examination of the claim and obtain an earlier effective date of registration, this rule allows copyright owners to upload a single digital copy of the issue if they comply with the following technical requirements.[20]

A digital copy submission must be contained in one electronic file, and the copy must be presented in an orderly form. A digital copy will be considered ''orderly'' if the cover and the entire content of the issue are included in the same file, the pages are arranged in sequential reading order, and the digital copy contains the same content as the physical copy. In addition, the file must be viewable and searchable, it must contain embedded fonts,[21] and it must be free from any access or copy restrictions that prevent the viewing, storage, or examination of the deposit, such as those implemented through digital rights management.

In addition, the file must be submitted in Portable Document Format (''PDF''), and it must be uploaded to the electronic registration system as an individual file (not in a .zip file). The size of the file must not exceed 500 megabytes. To meet this size limitation, applicants may compress the PDF file in accordance with instructions on the Office's website.

Applicants will be encouraged to follow the file-naming conventions specified on the Office's website.[22] Specifically, the file name should start with the International Standard Serial Number (''ISSN'') that has been assigned to the publication (if any), and it should include the publication date in ''YYYYMMDD'' format. For example, the file name for an issue published on January 1, 2022 under ISSN 1234–5678 would be ''12345678_20220101.pdf'' (leaving out the hyphen in the middle of the ISSN and adding an underscore between the ISSN and the publication date). If an ISSN number has not been assigned to the serial, the file name should include the title of the serial and the publication date for that issue.[23] For instance, the file name for a serial titled *Fashion Weekly* published on January 15, 2022 would be ''fashion_weekly_20220115.pdf''.

Over the next twelve months, the Copyright Office plans to contact copyright owners that routinely submit single serial issues to notify them about the change in the deposit requirements and the technical requirements for uploading a digital deposit. If an applicant uploads a digital deposit but fails to follow the technical requirements during this one-year transition period, the Office may communicate with the applicant to discuss the missing technical requirements and allow it to cure the deficiencies.

Accepting digital deposits in cases where the serial was published in a physical format will benefit both the Office and copyright owners by improving the efficiency of the registration process. Because a significantly larger percentage of single serial issues are submitted with physical deposits, the average processing time in FY21 for claims involving a single serial issue was significantly longer than claims involving other types of literary works.[24] The average processing time for a single serial issue with a physical deposit was 280 days in FY21; if correspondence was needed, the processing time jumped to 307 days. By contrast, the average processing time for a single serial issue with an electronic deposit was 72 days, which is comparable to the overall average for other types of literary works.[25]

There are many reasons for the disparity in the review time between physical and electronic submissions, the most significant one being related to the time required for the Office to receive mailed deposits. When an applicant uploads a digital file in an acceptable file format, the Office typically receives the application, filing fee, and deposit on the same date. The examiner can review the uploaded file as soon as the claim has been assigned, because the Office does not need physical copies to examine a serial for copyrightable authorship.

Conversely, when an applicant submits an online application and mails physical copies to the Office, the deposit may arrive long after the date that the application and filing fee were received, and in some cases it may take weeks to connect the application with the correct deposit. In addition to the inherent delay in mail versus electronic submission, physical mail sent to the Office faces additional delays. Before the physical deposit can be delivered to the Office, it must be sent offsite to be screened and decontaminated for possible pathogens.[26] Then the Office's Materials Control and Analysis Division (''MCA'') must manually match the deposit to the corresponding application. To facilitate this process, applicants are expected to print a ''shipping slip'' that contains a barcode generated by the electronic registration system, and attach that document to the physical deposits.[27] Unfortunately, many serials are submitted without the required shipping slip. In such cases, MCA must correspond with the applicant to obtain the case number that was assigned to the application, search for the application in the electronic registration system, and manually generate a new shipping slip with an identifying barcode.

In the vast majority of cases, the Serials Division of the Library of Congress does not need these physical copies for its collections. Physical deposits would be useful only if (1) the

publication. The requirements for registering two or more issues with the group registration option remain unchanged.

[19] This rule does not change the deposit requirements for registering a serial that is published solely in electronic format. Copyright owners are still required to submit ''all elements constituting the work in its published form, *i.e.,* the complete work as published, including metadata and authorship for which registration is not sought.'' 37 CFR 202.20(b)(2)(iii)(B). In other words, ''[p]ublication in an electronic only format requires submission of the digital file(s) in exact first-publication form and content.'' *Id.*

[20] To be clear, copyright owners must comply with these technical requirements if they want to upload a digital copy of a work that was published in a physical form. As discussed in footnote 19, they do not need to comply with these requirements when uploading a digital copy of a work that was published solely in electronic form.

[21] This means that the fonts that appeared within the issue when it was published must be included within the file itself.

[22] Guidance will be provided on the Registration Portal for the Literary Division, which is located at *https://copyright.gov/registration/literary-works/.* Similar guidance will be added to the *Compendium of U.S. Copyright Office Practices* at a later date.

[23] Copyright owners may obtain an ISSN by contacting the U.S. ISSN Center (*www.loc.gov/issn*).

[24] During this time, 75% of single serial issues were submitted with a physical deposit. For other types of literary works, the numbers were reversed: 75% of those claims were submitted with an electronic deposit, while 25% were submitted with a physical deposit.

[25] The average processing time for other literary works was 57 days in FY21.

[26] *See Compendium of U.S. Copyright Office Practices, Third Edition* 1508.6, 1508.6(A), and 1508.6(B) (2021) (''Compendium'').

[27] 37 CFR 202.3(b)(2)(i)(D) (''an applicant may send physical copies or phonorecords as necessary to satisfy the best edition requirements, by mail to the Copyright Office, using the required shipping slip generated during the online registration process'').

Library has selected the serial for its collections; (2) certain issues are missing from the collections (or previously deposited copies of such issues had been lost or damaged); and (3) the physical copies that were submitted for purposes of registration happened to be the precise issues that are needed to fill the gap in the collection. While this could theoretically happen, it does not happen often enough to justify the work and expense required on the part of both the claimant and the Office to submit and process physical copies within the Office.

For copyright owners, the rule will reduce the cost of seeking a registration by lowering the incremental cost of producing and mailing physical copies to the Office. It also provides them with certain benefits. When the Office registers a serial issue, the effective date of registration is the date that the Office received the application, filing fee, and deposit in proper form. As discussed above, when an applicant uploads a digital copy of the deposit to the electronic registration system, the Office typically receives the application, filing fee, and deposit on the same date. By comparison, as described above, when an applicant sends physical copies to the Office the deposit may arrive long after the date that the application and filing fee were received—thereby establishing a later effective date of registration. Moreover, if an applicant uploads a complete copy through the electronic registration system, the Office will retain a digital copy of the issue for twenty years.[28] Digital copies are much easier to track, store, and retrieve than physical copies. This is critical if the copyright owner or other interested parties need to obtain a copy of a particular issue for use in litigation or another purpose.

To be clear, copyright owners may continue to submit their deposits in a physical format if they wish to do so, and in such cases, one copy will be required instead of two.[29] For all of the reasons provided here, the Office strongly encourages applicants to upload copies to the electronic registration system, instead of sending them in a physical format.

This is a technical change to a ''rule[ ] of agency . . . procedure [and] practice,'' [30] By reducing the number of copies required for registering a single issue of a serial publication, and by giving copyright owners the option of submitting their deposits either in digital or physical format, it does not harm the interests of any parties and eases the deposit burden for some applicants. Accordingly, the Office finds good cause for publishing this as a final rule without first issuing a notice of proposed rulemaking.[31]

List of Subjects in 37 CFR Part 202

Copyright, Preregistration and registration of claims to copyright.

Final Regulations

For the reasons set forth in the preamble, the Copyright Office amends 37 CFR part 202 as follows:

PART 202—PREREGISTRATION AND REGISTRATION OF CLAIMS TO COPYRIGHT

■ 1. The authority citation for part 202 continues to read as follows:

Authority: 17 U.S.C. 408(f), 702.

■ 2. Amend § 202.20 by revising paragraph (c)(2) introductory text and by adding paragraph (c)(2)(i)(N) to read as follows:

§ 202.20 Deposit of copies and phonorecords for copyright registration.

* * * * *

(c) * * *

(2) In the case of certain works, the special provisions set forth in this clause shall apply. In any case where this clause specifies that one copy or phonorecord may be submitted, that copy or phonorecord shall represent the best edition, or the work as first published, as set forth in paragraph (c)(1) of this section, unless stated otherwise.

(i) * * *

(N) A single issue of a serial publication, for which the deposit may comply with the requirements set forth in paragraphs (b)(2)(iii)(B) or (c)(2)(i)(N)(*1*) or (*2*) of this section.

(*1*) If the issue was published in a physical format, the applicant may upload a digital copy to the electronic registration system provided that the following requirements have been met. The file must be submitted in Portable Document Format (PDF), it must be assembled in an orderly form, and it must be uploaded as one electronic file (*i.e.,* not in a .zip file). The file must be viewable and searchable, contain embedded fonts, and be free from any access or copy restrictions (such as those implemented through digital rights management) that prevent the viewing, storage, or examination of the issue. The file size for the upload must not exceed 500 megabytes, but the file may be compressed to comply with this requirement, consistent with instructions on the Office's website. Applicants are encouraged to use the file-naming convention specified on the Copyright Office's website.

(*2*) Alternatively, the applicant may submit a single physical copy of the issue. If the claim is submitted with the Standard Application, the copy must be accompanied by the required shipping slip generated by the electronic registration system, the shipping slip must be attached to the copy, the copy and the shipping slip must be included in the same package, and the package must be sent to the address specified on the shipping slip.

* * * * *

Dated: June 27, 2022.

Shira Perlmutter,

Register of Copyrights and Director of the U.S. Copyright Office.

Approved by:

Carla D. Hayden,

Librarian of Congress.

[FR Doc. 2022–15522 Filed 7–21–22; 8:45 am]

BILLING CODE 1410–30–P

[28] *See* Compendium 1510.1 (''Published deposit materials are currently stored for twenty years'').

[29] The rule also confirms that the copy must be sent in the same package with the shipping slip that is generated by the electronic system, as required by the current regulation.

[30] 5 U.S.C. 553(b)(A).

[31] *See* 5 U.S.C. 553(b)(B) (rules may be issued without notice of proposed rulemaking where the agency finds that an NPRM is ''unnecessary, or contrary to the public interest'').

DEPARTMENT OF VETERANS AFFAIRS

38 CFR Parts 17 and 70

RIN 2900–AQ44

VHA Claims and Appeals Modernization

AGENCY: Department of Veterans Affairs.

ACTION: Final rule.

SUMMARY: The Department of Veterans Affairs (VA) is amending its regulations concerning its claims and appeals process governing various programs administered by the Veterans Health Administration (VHA). The Veterans Appeals Improvement and Modernization Act of 2017 (hereafter referred to as the AMA) amended the procedures applicable to administrative review and appeal of VA decisions on claims for benefits, creating a new, modernized review system. This amendment will sunset certain VHA regulations which are inconsistent with the AMA.

DATES: *Effective date:* This rule is effective August 22, 2022.

FOR FURTHER INFORMATION CONTACT: Erik Shepherd, Chief, VHA Claims and

Appeals Modernization, Office of Regulations, Appeals, and Policy, Department of Veterans Affairs, 810 Vermont Ave. NW, Washington, DC 20420, (202) 450–7882 (This is not a toll-free number.).

SUPPLEMENTARY INFORMATION: In a document published in the **Federal Register** on February 21, 2020, VA published a proposed rule to revise 38 CFR 17.133, 17.276, 17.904, 17.1006, and 70.40 to make clear that VHA reconsideration is available only in legacy claims. VA also proposed to revise § 17.132 to clarify that appeal to the Board of Veterans' Appeals, as the sole avenue for disputing a VA decision regarding payment or reimbursement for care at a non-VA facility or by a non-VA provider, will apply only to payment decisions made for legacy claims. 85 FR 10118. VA provided a 60-day comment period, which ended on April 21, 2020. VA received six comments on the proposed rule. We adopt the proposed rule as final, with one technical change. The technical change removes the proposed amendments to 38 CFR 17.276 from this rulemaking for the reasons stated below.

Two comments expressed general support for VHA's adoption of processes contained in the AMA, but did not suggest any changes to the rule as proposed. To the extent that one comment indicated that the full potential has not yet been met for VHA appeals, and any opportunity to speed up the process should be considered and executed, VA has implemented the AMA as generally applicable to benefits administered throughout VA, to include benefits administered by VHA. The current rulemaking only addressed current VHA regulations that are inconsistent with the AMA and the VA Claim and Appeals Modernization regulatory amendments. As the proposed rule did not attempt to delineate any VHA specific appeals process updates, we believe that this portion of the comment is outside the scope of the proposed rulemaking. VA appreciates these comments and makes no changes based on these comments.

Two comments recommended that VA open new medical schools. Because the proposed rule sought to discontinue certain legacy processes associated with VA claims, and did not address other VA processes or more specifically the concept of VA establishing medical schools, these comments are beyond the scope of the proposed rule, and we make no changes based on these comments.

One comment alleged discrimination and referred to a Historically Underutilized Business Zone (HUB Zone) appeal. Without more information in the comment to link the alleged discrimination to the proposed rule, we believe a general reference to a HUB Zone appeal is beyond the scope of the proposed rule that sought to discontinue certain legacy processes associated with VA claims. We therefore make no changes based on this comment.

Lastly, one comment encouraged VA to revise § 17.133 as proposed to add U.S. Department of Housing and Urban Development-VA Supportive Housing (HUD–VASH) Program benefits as an enumerated benefit subject to reconsideration under the legacy administrative processes. VA's proposed rule contemplated neither expansion, contraction, nor clarification of the benefits subject to the legacy administrative processes. Instead, the preamble to the proposed rule merely stated that reconsiderations would only be available to legacy appeals as the term legacy appeal is defined in parts 3 and 19 of title 38 of the Code of Federal Regulations. As the proposed rule did not attempt to define or clarify what is contemplated in the definition of legacy appeal, we believe that this comment is also outside the scope of the proposed rulemaking. VA is not making any changes based on this comment.

In a related rulemaking, RIN 2900–AP02, VA proposed changes to 38 CFR 17.276. See 83 FR 2396. RIN 2900–AP02 was finalized and published first and, as such, any changes to 38 CFR 17.276 are removed and included in RIN 2900–AP02. See 87 FR 41594. VA received no comments on the proposed changes to 38 CFR 17.276 in either rulemaking. Given that the changes proposed to 38 CFR 17.276 are now addressed by RIN 2900–AP02, any changes in the original proposed rule related to 38 CFR 17.276 are removed from this rulemaking.

Executive Orders 12866, 13563

Executive Orders 12866 and 13563 direct agencies to assess the costs and benefits of available regulatory alternatives and, when regulation is necessary, to select regulatory approaches that maximize net benefits (including potential economic, environmental, public health and safety effects, and other advantages; distributive impacts; and equity). Executive Order 13563 (Improving Regulation and Regulatory Review) emphasizes the importance of quantifying both costs and benefits, reducing costs, harmonizing rules, and promoting flexibility. The Office of Information and Regulatory Affairs has determined that this rule is not a significant regulatory action under Executive Order 12866. The Regulatory Impact Analysis associated with this rulemaking can be found as a supporting document at *www.regulations.gov.*

Regulatory Flexibility Act

The Secretary hereby certifies that this rule will not have a significant economic impact on a substantial number of small entities as they are defined in the Regulatory Flexibility Act (5 U.S.C. 601–612). This rule only affects procedures regarding the appeals process; it does not affect the cost of filing an appeal nor any amount duly owed to a small entity. Therefore, pursuant to 5 U.S.C. 605(b), the initial and final regulatory flexibility analysis requirements of 5 U.S.C. 603 and 604 do not apply.

Unfunded Mandates

The Unfunded Mandates Reform Act of 1995 requires, at 2 U.S.C. 1532, that agencies prepare an assessment of anticipated costs and benefits before issuing any rule that may result in the expenditure by State, local, and tribal governments, in the aggregate, or by the private sector, of $100 million or more (adjusted annually for inflation) in any one year. This final rule would have no such effect on State, local, and tribal governments, or on the private sector.

Paperwork Reduction Act

This final rule contains no provisions constituting a collection of information under the Paperwork Reduction Act of 1995 (44 U.S.C. 3501–3521).

Assistance Listing

The Assistance Listing numbers and titles for the programs affected by this document are 64.009—Veterans Medical Care Benefits; 64.039—CHAMPVA.

Congressional Review Act

Pursuant to the Congressional Review Act (5 U.S.C. 801 *et seq.*), the Office of Information and Regulatory Affairs designated this rule as not a major rule, as defined by 5 U.S.C. 804(2).

List of Subjects in 38 CFR Parts 17 and 70

Administrative practice and procedure, Alcohol abuse, Alcoholism, Claims, Day care, Dental health, Drug abuse, Foreign relations, Government contracts, Grant programs-health, Grant programs-veterans, Health care, Health facilities, Health professions, Health records, Homeless, Medical and dental schools, Medical devices, Medical research, Mental health programs, Nursing homes, Philippines, Reporting and recordkeeping requirements,

Scholarships and fellowships, Travel and transportation expenses, Veterans.

Signing Authority

Denis McDonough, Secretary of Veterans Affairs, approved this document on June 17, 2022, and authorized the undersigned to sign and submit the document to the Office of the Federal Register for publication electronically as an official document of the Department of Veterans Affairs.

Consuela Benjamin,

Regulations Development Coordinator, Office of Regulation Policy & Management, Office of General Counsel, Department of Veterans Affairs.

For the reasons set out in the preamble, we amend 38 CFR parts 17 and 70 as set forth below:

PART 17—MEDICAL

■ 1. The authority citation for part 17 continues to read in part as follows:

Authority: 38 U.S.C. 501, and as noted in specific sections.

* * * * *

■ 2. Amend § 17.132 by:

■ a. Designating the undesignated paragraph as paragraph (b).

■ b. Adding paragraph (a).

The addition reads as follows:

§ 17.132 Appeals.

(a) This section applies only to legacy claims.

* * * * *

■ 3. Amend § 17.133 by revising paragraph (a) to read as follows:

§ 17.133 Procedures.

(a) *Scope.* This section sets forth reconsideration procedures regarding claims for benefits administered by the Veterans Health Administration (VHA). This section applies only to legacy claims.

* * * * *

■ 4. Amend § 17.904 by:

■ a. Designating the undesignated paragraph as paragraph (b).

■ b. Adding paragraph (a).

The addition reads as follows:

§ 17.904 Review and appeal process.

(a) This section applies only to legacy claims.

* * * * *

■ 5. Amend § 17.1006 by revising the final sentence to read as follows:

§ 17.1006 Decisionmakers.

* * * Any decision denying a benefit must be in writing and inform the claimant of VA appeal rights.

* * * * *

PART 70—VETERANS TRANSPORTATION PROGRAMS

■ 6. The authority citation for part 70 continues to read as follows:

Authority: 38 U.S.C. 101, 111, 111A, 501, 1701, 1714, 1720, 1728, 1782, 1783, and E.O. 11302, 31 FR 11741, 3 CFR, 1966–1970 Comp., p. 578, unless otherwise noted.

■ 7. Amend § 70.40 by:

■ a. Designating the undesignated paragraph as paragraph (b).

■ b. Adding paragraph (a).

The addition reads as follows:

§ 70.40 Administrative procedures.

(a) This section applies only to legacy claims.

* * * * *

[FR Doc. 2022–15572 Filed 7–21–22; 8:45 am]

BILLING CODE 8320–01–P

Proposed Rules

Federal Register
Vol. 87, No. 140
Friday, July 22, 2022

This section of the FEDERAL REGISTER contains notices to the public of the proposed issuance of rules and regulations. The purpose of these notices is to give interested persons an opportunity to participate in the rule making prior to the adoption of the final rules.

DEPARTMENT OF HOMELAND SECURITY

Office of the Secretary

6 CFR Part 5

[Docket No. USCBP–2022–0028]

Privacy Act of 1974: Implementation of Exemptions; Department of Homeland Security (DHS)/U.S. Customs and Border Protection (CBP)–027 Customs Broker Management (CBM) System of Records

AGENCY: U.S. Customs and Border Protection, Department of Homeland Security.

ACTION: Notice of proposed rulemaking.

SUMMARY: The Department of Homeland Security (DHS) is giving concurrent notice of a newly established system of records pursuant to the Privacy Act of 1974 for the ''DHS/U.S. Customs and Border Protection (CBP)-027 Customs Broker Management (CBM) System of Records'' and this proposed rulemaking. In this proposed rulemaking, the Department proposes to exempt portions of the system of records from one or more provisions of the Privacy Act because of criminal, civil, and administrative enforcement requirements.

DATES: Comments must be received on or before August 22, 2022.

ADDRESSES: You may submit comments, identified by docket number USCBP–2022–0028, by one of the following methods:

- *Federal e-Rulemaking Portal: http://www.regulations.gov.* Follow the instructions for submitting comments.
- *Fax:* 202–343–4010.
- *Mail:* Lynn Parker Dupree, Chief Privacy Officer, Privacy Office, Department of Homeland Security, Washington, DC 20528–0655.

Instructions: All submissions received must include the agency name and docket number USCBP–2022–0028. All comments received will be posted without change to *http://www.regulations.gov,* including any personal information provided.

Docket: For access to the docket to read background documents or comments received, go to *http://www.regulations.gov.*

FOR FURTHER INFORMATION CONTACT: For general questions please contact: Debra L. Danisek, (202) 344–1610, *privacy.cbp@cbp.dhs.gov,* CBP Privacy Officer, U.S. Customs and Border Protection, Ronald Reagan Building, 1300 Pennsylvania Avenue NW, Washington, DC 20229. For privacy questions, please contact: Lynn Parker Dupree, (202) 343–1717, *Privacy@hq.dhs.gov,* Chief Privacy Officer, Privacy Office, Department of Homeland Security, Washington, DC, 20528–0655.

SUPPLEMENTARY INFORMATION:

I. Background

In accordance with the Privacy Act of 1974, 5 U.S.C. 552a, the Department of Homeland Security (DHS) proposes to establish a new DHS system of records titled, ''DHS/U.S. Customs and Border Protection (CBP)–027 Customs Broker Management.'' The records in this system are currently covered under the ''DHS/CBP–010 Persons Engaged in International Trade in Customs and Border Protection Licensed/Regulated Activities Systems of Records'' (73 FR 77753, December 19, 2008), and historically under the ''Treasury/CS.069 Customs Brokers File'' (66 FR 52984, October 18, 2001). DHS/CBP is creating this new System of Records to distinguish the Customs Broker application, exam, license, and vetting records from the other records in ''DHS/CBP–010 Persons Engaged in International Trade in Customs and Border Protection Licensed/Regulated Activities Systems of Records'' (73 FR 77753, December 19, 2008). In addition, the new System of Records provides notice for a new collection and maintenance of information (*i.e.,* audio and video recordings) from individuals taking the Customs Broker License Exam (CBLE).

Customs Brokers are private individuals, associations, corporations, or partnerships licensed, regulated, and empowered by CBP to assist importers and exporters in meeting federal requirements governing imports and exports. Customs Brokers submit necessary information and appropriate payments to DHS/CBP on behalf of their clients and charge a fee for their service. Customs Brokers must have expertise in the entry procedures, admissibility requirements, classifications, valuation, and applicable rates of duties, taxes, and fees for imported merchandise.

Pursuant to 19 CFR 111.11, an individual is eligible to qualify for a Customs Broker license if he or she (1) is a U.S. citizen on the date of submission of the application referred to in 19 CFR 111.12(a) (OMB Control Number 1651–0034/CBP Form 3124) and is not an officer or employee of the U.S. government, (2) is the age of 21 prior to the date of submission of the application, (3) possesses good moral character, and (4) has passed the Customs Broker License Exam, by attaining a passing grade (75 percent or higher) on the examination taken within the 3-year period before submission of the application.

A partnership is eligible to qualify for a Customs Broker license if they have at least one member of the partnership who is a broker. *See* 19 CFR 111.11(b). An association or corporation is eligible to qualify for a Customs Broker license if (1) they are empowered under its articles of association or articles of incorporation to transact customs business as a broker, and (2) have at least one officer who is a broker. *See* 19 CFR 111.11(c).

DHS/CBP manages the Customs Broker's license program and collects information from applicants when they register to take the Customs Broker License Exam, during the administration of the Customs Broker License Exam, when they apply for a broker's license, throughout the background investigation processes, through the triennial reporting process, and through continuing education requirements.

The Customs Broker License Exam is offered to applicants twice a year. Applicants can go to *https://e.cbp.dhs.gov/ecbp/#/main* to register to take the exam. In addition to providing biographic information when registering, applicants are also required to pay a registration fee which is completed though the eCBP portal. Applicants can register for either an in-person or remotely proctored examination. DHS/CBP may video and/or audio record applicants taking either in-person or proctored exams. These recordings allow DHS/CBP to ensure a

fair and equitable examination and monitor compliance with examination procedures and requirements.

Once an applicant has successfully passed the exam, the applicant can apply for a Customs Broker license at a CBP facility near where the applicant plans to transact business as a Broker. The Customs Broker license package requires applicants to submit additional biographic information, via CBP Form 3124 (OMB Control No. 1651–0034), and fingerprints are collected at a CBP facility by a CBP Officer and sent to the CBP Trusted Worker Program System (TWP).[1] DHS/CBP will use this information to conduct a thorough background investigation which will include fingerprint analysis, review of character references, as well as reviews of credit reports and arrest records. DHS/CBP will use all available information to determinate whether to grant a Customs Broker license. Additionally, DHS/CBP conducts periodic reviews of Broker license holders to determine if a Broker's license should be revoked.

DHS/CBP stores information related to Broker's licenses in the Automated Commercial Environment system (ACE) and on designated CBP servers. Fingerprints collected as part of the background investigation process are stored in the DHS Office of Biometric Identity Management (OBIM) Automatic Biometric Identification System (IDENT). In addition, some information will be stored on DHS contractors' systems to assist in the administration of the Customs Broker License Examination. Any files related to appeals will be transferred to CBP and maintained on a CBP system.

Consistent with DHS' information sharing mission, information stored in the DHS/CBP–027 Customs Broker Management system of records may be shared with other DHS components that have a need to know the information to carry out their national security, law enforcement, immigration, intelligence, or other homeland security functions. In addition, DHS/CBP may share information with appropriate federal, state, local, tribal, territorial, foreign, or international government agencies consistent with the routine uses set forth in this system of records notice.

On September 10, 2021, CBP published a non-Privacy Act Notice of Proposed Rulemaking (NPRM) in the **Federal Register** (86 FR 50794) proposing to amend the CBP regulations to require continuing education for individual customs broker license holders (individual brokers) and to create a framework for administering this requirement. The Notice of Proposed Rulemaking provided for a 60-day comment period, which ended on November 9, 2021. Under the notice of proposed rulemaking, individual brokers must earn continuing education credits for a variety of training or educational activities, whether in-person or online, including the completion of coursework, seminars, workshops, symposia, or conventions, and, subject to certain limitations and requirements, the preparation and presentation of subject matter as an instructor, discussion leader, or speaker. Individual brokers must report and certify their compliance with the continuing broker education requirement upon the submission of the Triennial Status Report (TSR). CBP intends to publish a Final Rule which will effectuate the changes described above.

[1] *See* U.S. DEPARTMENT OF HOMELAND SECURITY, U.S. CUSTOMS AND BORDER PROTECTION, PRIVACY IMPACT ASSESSMENT FOR THE TRUSTED WORKER PROGRAM SYSTEM (TWP), DHS/CBP/PIA–062, *available at https://www.dhs.gov/privacy-documents-us-customs-and-border-protection.*

II. Privacy Act

The fair information practice principles found in the Privacy Act underpin the statutory framework governing the means by which Federal Government agencies collect, maintain, use, and disseminate personally identifiable information. The Privacy Act applies to information that is maintained in a ''system of records.'' A ''system of records'' is a group of any records under the control of an agency from which information is retrieved by the name of the individual or by some identifying number, symbol, or other identifying particular assigned to the individual. In the Privacy Act, an individual is defined to encompass U.S. citizens and lawful permanent residents. As a matter of policy, DHS extends administrative Privacy Act protections to all individuals where systems of records maintain information on U.S. citizens, lawful permanent residents, and visitors.

The Privacy Act allows government agencies to exempt certain records from the access and amendment provisions. If an agency claims an exemption, however, it must issue a Notice of Proposed Rulemaking to make clear to the public the reasons why a particular exemption is claimed.

DHS is claiming exemptions from certain requirements of the Privacy Act for DHS/CBP–027 Customs Broker Management System of Records. Some information in DHS/CBP–027 Customs Broker Management System of Records relates to official DHS national security, law enforcement, immigration, intelligence, or other homeland security functions. These exemptions are needed to protect information relating to DHS activities from disclosure to subjects or others related to these activities. Specifically, the exemptions are required to preclude subjects of these activities from frustrating these processes; to avoid disclosure of activity techniques; to protect the identities and physical safety of confidential informants and law enforcement personnel; to ensure DHS' ability to obtain information from third parties and other sources; to protect the privacy of third parties; and to safeguard classified information. Disclosure of information to the subject of the inquiry could also permit the subject to avoid detection or apprehension.

In appropriate circumstances, where compliance would not appear to interfere with or adversely affect the law enforcement purposes of this system and the overall law enforcement process, the applicable exemptions may be waived on a case by case basis.

A notice of system of records for DHS/CBP–027 Customs Broker Management System of Records is also published in this issue of the **Federal Register**.

List of Subjects in 6 CFR Part 5

Freedom of information, Privacy.

For the reasons stated in the preamble, DHS proposes to amend chapter I of title 6, Code of Federal Regulations, as follows:

PART 5—DISCLOSURE OF RECORDS AND INFORMATION

■ 1. The authority citation for Part 5 continues to read as follows:

Authority: 6 U.S.C. 101 *et seq.;* Pub. L. 107–296, 116 Stat. 2135; 5 U.S.C. 301. Subpart A also issued under 5 U.S.C. 552. Subpart B also issued under 5 U.S.C. 552a.

■ 2. In Appendix C to Part 5, add paragraph 88 to read as follows:

Appendix C to Part 5—DHS Systems of Records Exempt From the Privacy Act

88. The DHS/CBP–027 Customs Broker Management System of Records consists of electronic and paper records and will be used by DHS and its components. DHS/CBP Customs Broker Management System of Records is a repository of information held by DHS in connection with its several and varied missions and functions, including, but not limited to the enforcement of civil and criminal laws; investigations, inquiries, and proceedings there under; and national security and intelligence activities. DHS/CBP–027 Customs Broker Management System of Records maintains information about individuals, associations, corporations,

or partnerships to administer the Customs Broker License Exam, determine suitability for providing an individual a Customs Broker license, and determine whether a licensed Customs Broker continues to meet the eligibility requirements to maintain a Customs Broker license.

The Secretary of Homeland Security has exempted this system pursuant to exemption 5 U.S.C. 552a(j)(2) of the Privacy Act, portions of this system are exempt from 5 U.S.C. 552a(c)(3) and (4); (d); (e)(1), (e)(2), (e)(3), (e)(4)(G), (e)(4)(H), (e)(4)(I), (e)(5), and (e)(8); (f); and (g). Additionally, the Secretary has exempted this system pursuant to 5 U.S.C. 552a(k)(2) of the Privacy Act from subsections (c)(3), (d), (e)(1), (e)(4)(G), (e)(4)(H), (e)(4)(I), and (f). Exemptions from these particular subsections are justified, on a case-by-case basis to be determined at the time a request is made, for the following reasons:

(a) From subsection (c)(3) and (4) (Accounting for Disclosures) because release of the accounting of disclosures could alert the subject of an investigation of an actual or potential criminal, civil, or regulatory violation to the existence of that investigation and reveal investigative interest on the part of DHS as well as the recipient agency. Disclosure of the accounting would therefore present a serious impediment to law enforcement efforts and/or efforts to preserve national security. Disclosure of the accounting would also permit the individual who is the subject of a record to impede the investigation, to tamper with witnesses or evidence, and to avoid detection or apprehension, which would undermine the entire investigative process.

(b) From subsection (d) (Access to Records) because access to the records contained in this system of records could inform the subject of an investigation of an actual or potential criminal, civil, or regulatory violation to the existence of that investigation and reveal investigative interest on the part of DHS or another agency. Access to the records could permit the individual who is the subject of a record to impede the investigation, to tamper with witnesses or evidence, and to avoid detection or apprehension. Amendment of the records could interfere with ongoing investigations and law enforcement activities when weighing and evaluating all available information. Further, permitting amendment to records after an investigation has been completed could impose administrative burdens on investigators. In addition, permitting access and amendment to such information could disclose security-sensitive information that could be detrimental to homeland security.

(c) From subsection (e)(1) (Relevancy and Necessity of Information) because in the course of investigations into potential violations of federal law, the accuracy of information obtained or introduced occasionally may be unclear, or the information may not be strictly relevant or necessary to a specific investigation. In the interests of effective law enforcement, it is appropriate to retain all information that may aid in establishing patterns of unlawful activity.

(d) From subsection (e)(2) (Collection of Information from Individuals) because requiring that information be collected from the subject of an investigation would alert the subject to the nature or existence of the investigation, thereby interfering with that investigation and related law enforcement activities.

(e) From subsection (e)(3) (Notice to Subjects) because providing such detailed information could impede law enforcement by compromising the existence of a confidential investigation or reveal the identity of witnesses or confidential informants.

(f) From subsections (e)(4)(G), (e)(4)(H), and (e)(4)(I) (Agency Requirements) and (f) (Agency Rules), because portions of this system are exempt from the individual access provisions of subsection (d) for the reasons noted above, and therefore DHS is not required to establish requirements, rules, or procedures with respect to such access. Providing notice to individuals with respect to existence of records pertaining to them in the system of records or otherwise setting up procedures pursuant to which individuals may access and view records pertaining to themselves in the system would undermine investigative efforts and reveal the identities of witnesses, and potential witnesses, and confidential informants.

(g) From subsection (e)(5) (Collection of Information) because with the collection of information for law enforcement purposes, it is impossible to determine in advance what information is accurate, relevant, timely, and complete.

(h) From subsection (e)(8) (Notice on Individuals) because compliance would interfere with DHS's ability to obtain, serve, and issue subpoenas, warrants, and other law enforcement mechanisms that may be filed under seal and could result in disclosure of investigative techniques, procedures, and evidence.

(i) From subsection (g)(1) (Civil Remedies) to the extent that the system is exempt from other specific subsections of the Privacy Act.

Lynn P. Dupree,

Chief Privacy Officer, Department of Homeland Security.

[FR Doc. 2022–15706 Filed 7–21–22; 8:45 am]

BILLING CODE 9111–14–P

DEPARTMENT OF AGRICULTURE

Agricultural Marketing Service

7 CFR Part 66

[Doc. No. AMS–FTPP–20–0057]

RIN 0581–AD95

2020 Annual Updates to List of Bioengineered Foods

ACTION: Proposed rule.

SUMMARY: The Agricultural Marketing Service (AMS) of the United States Department of Agriculture (USDA) is soliciting comments and feedback on an update to the List of Bioengineered Foods (List) as it pertains to the National Bioengineered Food Disclosure Standard (the Standard or NBFDS).

DATES: Comments must be received on or before September 20, 2022.

ADDRESSES: We invite you to submit written comments via the internet at *https://www.regulations.gov.* Comments may also be filed with the Docket Clerk, 1400 Independence Ave. SW, Room 2069–South, Washington, DC 20250; Fax: (202) 260–8369. All comments submitted in response to this notice, including the identity of individuals or entities submitting comments, will be made available to the public on the internet via *https://www.regulations.gov.* All comments should reference the docket number and the date and page number of this issue of the **Federal Register** and will be available for public inspection at: *https://www.regulations.gov.*

FOR FURTHER INFORMATION CONTACT: Paul Lewis, Director, Food Disclosure and Labeling Division, Fair Trade Practices Program, Agricultural Marketing Service, U.S. Department of Agriculture, Telephone (202) 720–3252, Email: *pauli.lewis@usda.gov.*

SUPPLEMENTARY INFORMATION:

I. Background

On July 29, 2016, Public Law 114–216 amended the Agricultural Marketing Act of 1946 (7 U.S.C. 1621 *et. seq.*) (amended Act) to require USDA to establish a national, mandatory standard for disclosing any food that is or may be bioengineered (BE). USDA published a final rule promulgating the regulations (7 CFR part 66) to implement the Standard on December 21, 2018 (83 FR 65814). The regulations became effective on February 19, 2019, with a mandatory compliance date of January 1, 2022. Under 7 CFR 66.1, a bioengineered food is a food that, subject to certain factors, conditions, and limitations, contains genetic material that has been modified through *in vitro* recombinant deoxyribonucleic acid (rDNA) techniques and for which the modification could not otherwise be obtained through conventional breeding or found in nature.

The regulations, at 7 CFR 66.6, contain the List, which currently includes: alfalfa, apple (Arctic™ varieties), canola, corn, cotton, eggplant (BARI Bt Begun varieties), papaya (ringspot virus-resistant varieties), pineapple (pink flesh varieties), potato, salmon (AquAdvantage®), soybean, squash (summer), and sugarbeet. As stated in the preamble to the final rule,

at 83 FR 65852, the List establishes a presumption about what foods might require disclosure under the NBFDS, but does not absolve regulated entities from the requirement to disclose the bioengineered status of food and food ingredients produced with foods not on the List when the regulated entities have actual knowledge that such foods or food ingredients are bioengineered. As a result, if a regulated entity is using a food or ingredient produced from an item on the List, they must make a bioengineered food disclosure unless they have records demonstrating that the food or ingredient they are using is not bioengineered. Similarly, even if a food is not on the List, a regulated entity must make a bioengineered food disclosure if they have actual knowledge that a food or a food ingredient being used is a bioengineered food or a bioengineered food ingredient.

As stated in 7 CFR 66.7(a), AMS will review and consider updates to the List on an annual basis and will solicit recommendations regarding updates to the List through notification in the **Federal Register** and on the AMS website. The regulations further provide that:

(1) Recommendations regarding additions to and subtractions from the List may be submitted to AMS at any time or as part of the annual review process.

(2) Recommendations should be accompanied by data and other information to support the recommended action.

(3) AMS will post public recommendations on its website, along with information about other revisions to the List that the agency may be considering, including input based on consultation with the government agencies responsible for oversight of the products of biotechnology: USDA's Animal and Plant Health Inspection Service (USDA–APHIS), the U.S. Environmental Protection Agency (EPA), and the Department of Health and Human Services' Food and Drug Administration (FDA).

(4) AMS will consider whether foods proposed for inclusion on the List have been authorized for commercial production somewhere in the world, and whether the food is currently in legal commercial production for human food somewhere in the world.

(5) If AMS determines that an update to the List is appropriate following its review of all relevant information provided, AMS will modify the List.

On July 24, 2020, AMS published a Notice in the **Federal Register** seeking public comment on recommendations to update the List (85 FR 44791). In the Notice, AMS sought comments on adding sugarcane (insect-resistant) to the List, and amending ''squash (summer)'' to ''squash (summer, virus-resistant).'' As required at 7 CFR 66.7(a)(3), AMS consulted with the government agencies responsible for oversight of the products of biotechnology, APHIS, EPA, and FDA, on this matter.

AMS also sought public comment to determine whether additional information was publicly available regarding bioengineered versions of cowpea and rice. AMS understands that bioengineered versions of cowpea and rice are at various stages of authorization for commercial production but are not yet in legal commercial production for human food. AMS also requested comments on any other foods not mentioned in the Notice that it should consider for addition to the List.

The comment period for the Notice closed on August 24, 2020. AMS received a total of 17 comments. After reviewing the public comments, AMS is proceeding with the proposed rule to add sugarcane (Bt insect-resistant varieties) to the List and amend ''squash (summer)'' to ''squash (summer, mosaic virus-resistant varieties).'' AMS did not receive any comments on cowpea or rice and is not proposing any action related to those two crops at this time.

Table 1 summarizes the proposed addition and modification to the List.

TABLE 1—PROPOSED AMENDMENTS TO THE LIST

Crop	Regulation	Proposed rule action
Sugarcane	7 CFR 66.6	Add to the List as ''Sugarcane (Bt insect-resistant varieties)''.
Squash (summer) ...	7 CFR 66.6	Add additional description to the existing entry on the List to read ''squash (summer, mosaic virus-resistant varieties)''.

II. Overview of Proposed Rule

A. Addition to the List

AMS received comments that both supported and opposed adding sugarcane (Bt insect-resistant varieties) to the List.

Those in favor of adding sugarcane (Bt insect-resistant varieties) to the List generally agreed that it met the dual criteria identified at 7 CFR 66.7(a)(4) to be added to the List: (1) authorized for commercial production somewhere in the world and (2) currently in legal commercial production for human food somewhere in the world. Several commenters also noted that adding sugarcane (insect-resistant) to the List would provide consumers with more information about their food.

Commenters opposed to adding sugarcane (Bt insect-resistant varieties) to the List acknowledged that commercial production of that crop is authorized and taking place in Brazil and that such production is primarily for seedling bulk up, and not for human consumption. However, we have no evidence that seedling bulk up is the only use for the crop, and we believe sugarcane (Bt insect-resistant varieties) could be used for human food and should be included on the List. AMS requests comments with data or evidence that would support or refute the conclusion that seedling bulk up is the only current use for sugarcane (Bt insect-resistant varieties).

Another commenter suggested that sugarcane (insect-resistant) produced in Brazil is unlikely to end up in the United States. Whether a product is likely to end up in the United States is not a factor that AMS must consider under 7 CFR 66.7. The List reflects production of bioengineered foods on a global level and does not consider whether such foods are likely to end up in the United States.

Lastly, some commenters suggested that because sugar produced from sugarcane (insect-resistant) is highly refined and does not contain detectable modified genetic material, it is not a bioengineered food and should not be added to the List. As stated above, the List establishes a presumption about which foods are or may be bioengineered. Inclusion on the List does not affirmatively mean an item on the List, or a food produced from an item on the List, is a bioengineered food. Rather, being on the List establishes a presumption and requires a regulated entity to make a bioengineered food disclosure unless they maintain records, in accordance with 7 CFR 66.9, to demonstrate that

modified genetic material is not detectable.

AMS has considered all the information provided to the agency related to sugarcane (insect-resistant) and believes the criteria identified in 7 CFR 66.7(a)(4) are met. Accordingly, this action proposes to update the List to include sugarcane (insect-resistant). AMS invites comments on the proposed addition of insect resistant sugarcane to the List.

B. Amendment to the List

Commenters were generally supportive of adding an additional modifier (virus-resistant) to the existing entry for squash (summer). One commenter noted that the additional modifier increases transparency and provides more information to consumers.

Another commenter asked that AMS consider additional specificity by further amending the entry for squash to include the specific trade name, Performance Series. As mentioned in the preamble to the final rule (83 FR 65819), AMS will, where practical, include specific trade names ''to help distinguish bioengineered versions of those foods from their non-bioengineered counterparts.'' The List currently includes two foods with specific trade names: Arctic™ variety apples and AquAdvantage® brand salmon. In each instance, the BE food (Arctic™ variety apples or AquAdvantage® brand salmon) is the only one of its kind that, to AMS's knowledge, meets the criteria identified in 7 CFR 66.7(a)(4).[1] However, as explained in the preamble to the final rule, items on the List will necessarily become more generic as more than one variety of a BE food are available (83 FR 65819). Similar to potato, which does not have a specific trade name modifier on the List, there is more than one variety of squash (summer) that meets the criteria identified in 7 CFR 66.7(a)(4).[2] As a result, AMS is not proposing to add a specific trade name to summer squash.

Additionally, adding ''virus-resistant'' to the existing description would not impact the recordkeeping burden for regulated entities. These entities may still be subject to an examination of customary or reasonable records for summer squash following a BE audit outlined in § 66.402. If regulated entities marketing summer squash or sugarcane are unable to obtain records from suppliers, they can make a disclosure.

After reviewing the public comments, AMS is proceeding with this proposed rule to amend ''squash (summer)'' to ''squash (summer, mosaic virus-resistant varieties).'' AMS invites comments on the proposed revision to summer squash on the List to specify ''squash (summer, mosaic virus-resistant varieties).

III. Required Regulatory Analyses

A. Paperwork Reduction Act

In accordance with the Paperwork Reduction Act of 1995 (44 U.S.C. 3501–3520), the information collection related to the NBFDS has previously been approved by OMB and assigned OMB No. 0581–0315—National Bioengineered Food Disclosure Standard. AMS estimates that changes in recordkeeping burden due to the proposed revisions to the List would be minimal.

Generally, the records necessary to substantiate the need for a disclosure/label are customary and reasonable, and therefore maintained in the usual course of business. The same records would be required to substantiate a decision not to label under § 66.9. Limiting reporting to a specific variety of summer squash does not really reduce recordkeeping. These entities may still be subject to an examination of customary or reasonable records for summer squash following a BE audit outlined in § 66.402. It could, however, reduce the burden associated with making disclosures, since fewer labels would be required where summer squash is known not to be bioengineered for virus resistance. Data are not available to measure the change in the number of entities who would be required to comply with the revised disclosure and recordkeeping requirements associated with this proposal, given the seasonal nature of summer squash production and variations in production from year to year. AMS requests comments with data or information on market share or proportion of squash of virus-resistant varieties and the number of entities that might be impacted by this change.

AMS did not receive any substantive comments during the open comment period for the Information Collection renewal request published earlier this year.

B. Civil Rights Review

AMS has considered the potential civil rights implications of this proposed rule on minorities, women, or persons with disabilities to ensure that no person or group shall be discriminated against on the basis of race, color, national origin, gender, religion, age, disability, sexual orientation, marital or family status, political beliefs, parental status, or protected genetic information. This review included persons that are employees of the entities that are subject to these regulations.

This proposed rule offers several distinct avenues of compliance for regulated entities that can be tailored to the needs of their consumers. Applying this approach does not deny any persons or groups the benefits of the program or subject any persons or groups to discrimination. AMS's Civil Rights Impact Analysis (CRIA) will be published in the **Federal Register** and on the AMS BE Disclosure web page along with publication of this proposed rule. A 60-day comment period will be provided to allow interested persons to respond to the CRIA. All written comments received in response to the CRIA and the proposed rule by the date specified will be considered.

C. Executive Order 13175

This rule has been reviewed in accordance with the requirements of Executive Order 13175—Consultation and Coordination with Indian Tribal Governments. Executive Order 13175 requires Federal agencies to consult with tribes on a government-to-government basis on policies that have tribal implications, including regulations, legislative comments or proposed legislation, and other policy statements or actions that have substantial direct effects on one or more Indian tribes, on the relationship between the Federal Government and Indian tribes or the distribution of power and responsibilities between the Federal Government and Indian tribes.

This proposed rule may impact individual members of Indian tribes that operate as food manufacturers or retailers; however, it would not have a direct effect on tribes or the relationship or distribution of power and

[1] Okanagan Specialty Fruits, the producer of Arctic™ brand apples, is the only entity to apply for deregulated status for bioengineered apples and to consult with FDA on bioengineered apples. Similarly, AquaBounty Technologies, Inc., the producer of AquAdvantage® salmon, is the only entity to gain approval for production of bioengineered salmon. New Plant Variety Consultations, *https://www.cfsanappsexternal.fda.gov/scripts/fdcc/?set=NewPlantVarietyConsultations.* Petition for Determination of Nonregulated Status, *https://www.aphis.usda.gov/aphis/ourfocus/biotechnology/permits-notifications-petitions/petitions/petition-status.* 21 CFR 528.1092; Electronic Animal Drug Product Listing Directory, *https://www.fda.gov/industry/structured-product-labeling-resources/electronic-animal-drug-product-listing-directory.*

[2] Petitions for Determination of Nonregulated Status, *https://www.aphis.usda.gov/aphis/ourfocus/biotechnology/permits-notifications-petitions/petitions/petition-status.* New Plant Variety Consultations, *https://www.cfsanappsexternal.fda.gov/scripts/fdcc/index.cfm?set=NewPlantVarietyConsultations.*

responsibilities between the Federal Government and Indian tribes. Therefore, consultation under Executive Order 13175 is not required at this time. However, AMS hosts a quarterly teleconference with Tribal Leaders where matters of mutual interest regarding the marketing of agricultural products are discussed. During two quarterly teleconference calls on March 11, 2021, and July 22, 2021, AMS provided Tribal representatives with an overview of the upcoming proposed rule that would add ''sugarcane (insect-resistant)'' to the List and amend ''squash (summer)'' to ''squash (summer, mosaic virus-resistant varieties),'' and extended the opportunity for questions and requests for additional information. At that time, AMS received no questions or requests from Tribal representatives. AMS will continue to extend outreach to ensure tribe members are aware of the requirements and benefits under this proposed rule once final. Where Tribes request consultation on relevant matters that are not required under legislation, AMS will collaborate with the Office of Tribal Relations.

D. Executive Orders 12866 and 13563

USDA is issuing this proposed rule in conformance with Executive Orders 12866 and 13563, which direct agencies to assess all costs and benefits of available regulatory alternatives and, if regulation is necessary, to select regulatory approaches that maximize net benefits, which include potential economic, environmental, public health and safety effects, distributive impacts, and equity. Executive Order 13563 emphasizes the importance of quantifying both costs and benefits, reducing costs, harmonizing rules, and promoting flexibility. Pursuant to 7 CFR 66.7(b), ''[r]egulated entities will have 18 months following the effective date of the updated List of Bioengineered Foods to revise food labels to reflect changes to the List in accordance with the disclosure requirements of this part.'' As this rule has been designated ''Significant,'' it has been reviewed by the Office of Management and Budget.

Cost changes due to this action will be limited to the addition of sugarcane to the List because regulated entities have already incurred costs associated with the inclusion of summer squash on the List. The addition of sugarcane to the List would not increase the cost of federal enforcement. To estimate the cost of the proposed action, the Label Insight Database was used to determine the number of products that use cane sugar as an ingredient and which have no other ingredients that would otherwise require labeling of the product as bioengineered as described in the regulatory impact analysis for the final rule on page 19.[3] A total of 10,600 individual UPCs were identified using this criteria. The upper and lower bounds of the estimate were calculated by multiplying 10,600 UPC by the unit cost for testing (unit cost range: $153–$431) and for analytical costs (unit cost range: $376–$3,084) established in the 2018 Final Rule. AMS estimates that the costs associated with this action would range from $6 million to $37 million for the initial year, with no ongoing annual costs and no significant change in benefits. Most of the estimated costs are related to a one-time deliberation by food manufacturers to confirm the source of sugar used in their products and to comply with recordkeeping and labeling requirements. If regulated entities marketing summer squash or sugarcane are unable to obtain records from suppliers, they can make a disclosure.

The annualized cost of adding sugarcane to the list of potentially bioengineered products would be between $500,000 and $3.5 million (annualized over 20 years using a seven percent discount rate). The rule is, therefore, not considered to be economically significant under Executive Order 12866. Even considering only the first year (where all of the costs are expected to occur), the estimated costs do not exceed the $100 million threshold for economically significant.

E. Initial Regulatory Flexibility Analysis

AMS has examined the economic implications of this proposed rule as required by the Regulatory Flexibility Act (5 U.S.C. 601–612). If a rule has significant economic impact on a substantial number of small entities, the Regulatory Flexibility Act requires agencies to analyze regulatory options that would lessen the economic effect of the rule on small entities, consistent with statutory objectives. AMS has concluded that the proposed rule, if finalized, would not have a significant economic impact on a substantial number of small entities.

The proposed addition of sugarcane (insect-resistant) and proposed amendment of ''squash (summer)'' to ''squash (summer, mosaic virus-resistant varieties)'' to the List would directly affect three industry sectors: cane sugar manufacturers, processed food manufacturers who use cane sugar or summer squash as ingredients, and grocery or other retailers who sell raw sugarcane (insect-resistant) or summer squash.

According to the 2017 Study of U.S. Business (SUSB) from the US Census, there were 37 cane sugar manufacturers in the United States. Approximately 32 of the total cane sugar manufacturers would meet the Small Business Administration definition of small. Of the 32 small firms, 11 would also qualify as very small manufacturers under the NBFDS regulations and would be exempt from disclosure requirements. Accordingly, those 11 firms would incur no costs associated with the addition of sugarcane (insect-resistant) to the List of Bioengineered Foods. The remaining 21 small firms would not likely face significant costs as they only have one product and are likely to know where the cane for their sugar originates. At this time sugarcane (insect-resistant) is grown commercially only in Brazil. If sugarcane (insect-resistant) becomes more prevalent, cane sugar producers could potentially be required to keep records on the origin of the cane processed into sugar and could incur certification costs associated with demonstrating that the final product has no detectable rDNA. Assuming that the refinement of cane sugar, like beet sugar, would support such a certification, cane sugar producers would face minimal labeling costs.

Food manufacturers who only use cane sugar as an ingredient will need to determine the certification status of the sugar they use—assuming sugar made from sugarcane (insect-resistant) makes it into the U.S. market. Most food manufacturers will already face costs associated with confirming the ingredients of their products and the marginal cost associated with an additional ingredient is expected to be small. As with beet sugar, it is unlikely that refined cane sugar would contain traceable levels of rDNA. As a result, regulated entities may not have additional labeling costs due to the addition of sugarcane (insect-resistant) to the List as there is a means to exempt their products from disclosure.

Food manufacturers whose products contain summer squash and retailers who sell uncooked summer squash will see no change or, potentially, a slight reduction in costs as the proposal would reduce the varieties of squash that require labeling. Food manufacturers whose products contain summer squash and retailers who sell uncooked summer squash are already maintaining records in accordance with the NBFDS.

Food manufacturers who use summer squash are likely concentrated in Fruit and Vegetable Preserving and Specialty

[3] *https://www.regulations.gov/document/AMS-TM-17-0050-14035.*

Food Manufacturing (NAICS 3114). This industry sector had 1,540 firms listed in the 2017 SUSB. Of these, approximately 1,475 would be classified as small. An additional 904 firms would be classified as very small by the NBFDS rule and, therefore, be exempt. Food manufacturers already face the administrative costs associated with using a product on the List of Bioengineered Foods. The proposal would make it easier for regulated entities, who are already maintaining records in compliance with the NBFDS, to demonstrate that labeling is not required if they know they are not receiving virus-resistant varieties. The proposal could also result in a slight decrease in the cost of labeling products containing summer squash if it is possible and desirable to avoid virus-resistant varieties. However, we do not attempt to quantify this reduction in any way. Costs to small food producers using summer squash therefore will remain unchanged or be reduced by this proposal.

Similarly, retailers will be primarily affected by the change in the definition of summer squash. Their costs will remain the same as they are now or be reduced slightly if they do not need to label as many products.

For these reasons, AMS is certifying that the proposal to add sugarcane (Bt insect-resistant varieties) to the List of Bioengineered Foods and limiting the varieties of squash listed as bioengineered foods to virus-resistant varieties will not have a significant economic impact on a substantial number of small entities.

F. Executive Order 12988

This proposed rule has been reviewed under Executive Order 12988, Civil Justice Reform. The proposed rule is not intended to have retroactive effect. There are no administrative procedures that must be exhausted prior to any judicial challenge to the provisions of this rule.

List of Subjects in 7 CFR Part 66

Agricultural commodities, Food labeling, Reporting and recordkeeping requirements.

For the reasons set forth in the preamble, the Agricultural Marketing Service proposes to amend 7 CFR part 66 as follows:

PART 66—NATIONAL BIOENGINEERED FOOD DISCLOSURE STANDARD

■ 1. The authority citation for 7 CFR part 66 continues to read as follows:

Authority: 7 U.S.C. 1621 *et seq.*

■ 2. Revise § 66.6 to read as follows:

§ 66.6 List of Bioengineered Foods.

The List of Bioengineered Foods consists of the following: Alfalfa, apple (Arctic™ varieties), canola, corn, cotton, eggplant (BARI Bt Begun varieties), papaya (ringspot virus-resistant varieties), pineapple (pink flesh varieties), potato, salmon (AquAdvantage®), soybean, squash (summer, mosaic virus-resistant varieties), sugarbeet, and sugarcane (Bt insect-resistant varieties).

Erin Morris,

Associate Administrator, Agricultural Marketing Service.

[FR Doc. 2022–15728 Filed 7–21–22; 8:45 am]

BILLING CODE 3410–02–P

DEPARTMENT OF TRANSPORTATION

Federal Aviation Administration

14 CFR Part 71

[Docket No. FAA–2022–0901; Airspace Docket No. 21–ANE–5]

RIN 2120–AA66

Proposed Amendment and Revocation of VOR Federal Airways; Northeast United States

AGENCY: Federal Aviation Administration (FAA), DOT.

ACTION: Notice of proposed rulemaking (NPRM).

SUMMARY: This action proposes to amend VHF Omnidirectional Range (VOR) Federal airways V–1, V–16, and V–290, and remove airways V–93 and V–229. This action is necessary to support the FAA's VOR Minimum Operational Network (MON) program.

DATES: Comments must be received on or before September 6, 2022.

ADDRESSES: Send comments on this proposal to the U.S. Department of Transportation, Docket Operations, 1200 New Jersey Avenue SE, West Building Ground Floor, Room W12–140, Washington, DC 20590; telephone: (800) 647–5527 or (202) 366–9826. You must identify FAA Docket No. FAA–2022–0901; Airspace Docket No. 21–ANE–5 at the beginning of your comments. You may also submit comments through the internet at *https://www.regulations.gov.*

FAA Order JO 7400.11F, Airspace Designations and Reporting Points, and subsequent amendments can be viewed online at *https://www.faa.gov/air_traffic/publications/.* For further information, you can contact the Rules and Regulations Group, Federal Aviation Administration, 800 Independence Avenue SW, Washington, DC 20591; telephone: (202) 267–8783.

FOR FURTHER INFORMATION CONTACT: Paul Gallant, Rules and Regulations Group, Office of Policy, Federal Aviation Administration, 800 Independence Avenue SW, Washington, DC 20591; telephone: (202) 267–8783.

SUPPLEMENTARY INFORMATION:

Authority for This Rulemaking

The FAA's authority to issue rules regarding aviation safety is found in Title 49 of the United States Code. Subtitle I, Section 106 describes the authority of the FAA Administrator. Subtitle VII, Aviation Programs, describes in more detail the scope of the agency's authority. This rulemaking is promulgated under the authority described in Subtitle VII, Part A, Subpart I, Section 40103. Under that section, the FAA is charged with prescribing regulations to assign the use of the airspace necessary to ensure the safety of aircraft and the efficient use of airspace. This regulation is within the scope of that authority as it would modify the VOR Federal airway route structure in the eastern United States to maintain the efficient flow of air traffic.

Comments Invited

Interested parties are invited to participate in this proposed rulemaking by submitting such written data, views, or arguments as they may desire. Comments that provide the factual basis supporting the views and suggestions presented are particularly helpful in developing reasoned regulatory decisions on the proposal. Comments are specifically invited on the overall regulatory, aeronautical, economic, environmental, and energy-related aspects of the proposal.

Communications should identify both docket numbers (FAA Docket No. FAA–2022–0901; Airspace Docket No. 21–ANE–5) and be submitted in triplicate to the Docket Management Facility (see **ADDRESSES** section for address and phone number). You may also submit comments through the internet at *https://www.regulations.gov.*

Commenters wishing the FAA to acknowledge receipt of their comments on this action must submit with those comments a self-addressed, stamped postcard on which the following statement is made: ''Comments to FAA Docket No. FAA–2022–0901; Airspace Docket No. 21–ANE–5.'' The postcard will be date/time stamped and returned to the commenter.

All communications received on or before the specified comment closing

date will be considered before taking action on the proposed rule. The proposal contained in this action may be changed in light of comments received. A report summarizing each substantive public contact with FAA personnel concerned with this rulemaking will be filed in the docket.

Availability of NPRM's

An electronic copy of this document may be downloaded through the internet at *https://www.regulations.gov.* Recently published rulemaking documents can also be accessed through the FAA's web page at *https://www.faa.gov/air_traffic/publications/airspace_amendments/.*

You may review the public docket containing the proposal, any comments received and any final disposition in person in the Dockets Office (see **ADDRESSES** section for address and phone number) between 9:00 a.m. and 5:00 p.m., Monday through Friday, except Federal holidays. An informal docket may also be examined during normal business hours at the office of the Eastern Service Center, Federal Aviation Administration, Room 210, 1701 Columbia Ave., College Park, GA 30337.

Availability and Summary of Documents for Incorporation by Reference

This document proposes to amend FAA Order JO 7400.11F, Airspace Designations and Reporting Points, dated August 10, 2021, and effective September 15, 2021. FAA Order JO 7400.11F is publicly available as listed in the **ADDRESSES** section of this proposed rule. FAA Order JO 7400.11F lists Class A, B, C, D, and E airspace areas, air traffic service routes, and reporting points.

The Proposal

The FAA is proposing an amendment to 14 CFR part 71 to amend VOR Federal airways V–1, V–16, and V–290, and remove airways V–93 and V–229. This action is necessary to support the FAA's VOR Minimum Operational Network (MON) program. The proposed route changes are described below.

V–1: V–1 extends from Craig, FL, to Boston, MA. The FAA proposes to remove the airway segments from Cofield, NC, to Boston, MA. As a result, V–1 would extend from Craig, FL, to Kinston, NC. The wording ''The portions within R–5002A, R–5002C and R–5002D are excluded during their times of use. The airspace within R–4006 is excluded.'' would be removed from the route description because the amended route would no longer pass by those areas. United States Area Navigation (RNAV) route T–303 will be published as an overlay of V–1.

V–16: V–16 consists of two parts: From Los Angeles, CA, to Holly Springs, MS; and From Shelbyville, TN, to Boston, MA. The FAA proposes to amend the second part of the route by removing the segments from the intersection of the Richmond, VA, 039° and the Patuxent, MD, 228° radials, to Boston, MA. As amended, the second part of V–16 would extend from Shelbyville, TN, to Richmond, VA. The first part of the route, from Los Angeles, CA, to Holly Springs, MS, would remain unchanged as currently charted. The wording ''The airspace within Restricted Areas R–5002A, R–5002C, and R–5002D is excluded. The airspace within Restricted Areas R–4005 and R–4006 is excluded.'' would be removed from the route description because the amended route would no longer pass by those areas. RNAV route T–224 would be extended as an overlay of V–16.

V–93: V–93 consists of two parts: From Patuxent River, MD, to the intersection of the Wilkes-Barre, PA 037° and the Sparta, NJ 300° radials; and From the intersection of the Sparta 018° and the Kingston, NY 270° radials, to Chester, MA. The FAA proposes to remove V–93 in its entirety. RNAV route T–295 currently overlays part of V–93, and T–324 is being extended as a partial overlay and replacement for V–93.

V–229: V–229 extends from Patuxent, MD, to Hartford, CT. The FAA proposes to remove V–229 in its entirety. RNAV route T–315 is being extended as an overlay of V–229.

V–290: V–290 consists of two parts: From Rainelle, WV, to Flat Rock, VA; and From Tar River, NC, to the intersection of the Tar River 109° and the New Bern, NC 042° radials. The FAA proposes to remove the segments from Rainelle, WV, to Flat Rock, VA, due to the planned decommissioning of the Rainelle, WV, (RNL) VOR. As amended, V–290 would extend from Tar River, NC, to the intersection of the Tar River 109° radial and New Bern, NC 042° radial. RNAV route T–360 is being extended as a partial overlay and replacement for V–290.

Domestic VOR Federal airways are published in paragraph 6010(a) of FAA Order JO 7400.11F, dated August 10, 2021, and effective September 15, 2021, which is incorporated by reference in 14 CFR 71.1. The VOR Federal airways listed in this document would be subsequently published and removed from FAA Order JO 7400.11.

FAA Order JO 7400.11, Airspace Designations and Reporting Points, is published yearly and effective on September 15.

Regulatory Notices and Analyses

The FAA has determined that this proposed regulation only involves an established body of technical regulations for which frequent and routine amendments are necessary to keep them operationally current. It, therefore: (1) is not a ''significant regulatory action'' under Executive Order 12866; (2) is not a ''significant rule'' under Department of Transportation (DOT) Regulatory Policies and Procedures (44 FR 11034; February 26, 1979); and (3) does not warrant preparation of a regulatory evaluation as the anticipated impact is so minimal. Since this is a routine matter that will only affect air traffic procedures and air navigation, it is certified that this proposed rule, when promulgated, will not have a significant economic impact on a substantial number of small entities under the criteria of the Regulatory Flexibility Act.

Environmental Review

This proposal will be subject to an environmental analysis in accordance with FAA Order 1050.1F, ''Environmental Impacts: Policies and Procedures'' prior to any FAA final regulatory action.

List of Subjects in 14 CFR Part 71

Airspace, Incorporation by reference, Navigation (air).

The Proposed Amendment

In consideration of the foregoing, the Federal Aviation Administration proposes to amend 14 CFR part 71 as follows:

PART 71—DESIGNATION OF CLASS A, B, C, D, AND E AIRSPACE AREAS; AIR TRAFFIC SERVICE ROUTES; AND REPORTING POINTS

■ 1. The authority citation for 14 CFR part 71 continues to read as follows:

Authority: 49 U.S.C. 106(f), 106(g); 40103, 40113, 40120; E.O. 10854, 24 FR 9565, 3 CFR, 1959–1963 Comp., p. 389.

§ 71.1 [Amended]

■ 2. The incorporation by reference in 14 CFR 71.1 of FAA Order JO 7400.11F, Airspace Designations and Reporting Points, dated August 10, 2021, and effective September 15, 2021, is amended as follows:

Paragraph 6010(a) Domestic VOR Federal Airways.

* * * * *

V–1 [Amended]

From Craig, FL, via INT Craig 020° and Charleston, SC, 214° radials; Charleston; Grand Strand, SC; INT Grand Strand 031° and Kinston, NC, 214° radials; to Kinston. Excluding the airspace below 2,700 feet MSL outside the United States between STARY INT and Charleston, SC.

* * * * *

V–16 [Amended]

From Los Angeles, CA; Paradise, CA; Palm Springs, CA; Blythe, CA; Buckeye, AZ; Phoenix, AZ; INT Phoenix 155° and Stanfield, AZ, 105° radials; Tucson, AZ; San Simon, AZ; INT San Simon 119° and Columbus, NM, 277° radials; Columbus; El Paso, TX; Salt Flat, TX; Wink, TX; INT Wink 066° and Big Spring, TX, 260° radials; Big Spring; Abilene, TX; Bowie, TX; Bonham, TX; Paris, TX; Texarkana, AR; Pine Bluff, AR; Marvell, AR; to Holly Springs, MS. From Shelbyville, TN; Hinch Mountain, TN; Volunteer, TN; Holston Mountain, TN; Pulaski, VA; Roanoke, VA; Lynchburg, VA; Flat Rock, VA; to Richmond, VA. The airspace within Mexico and the airspace below 2,000 feet MSL outside the United States is excluded.

* * * * *

V–93 [Removed]

* * * * *

V–229 [Removed]

* * * * *

V–290 [Amended]

From Tar River, NC; to INT Tar River 109° radial and New Bern, NC, 042° radial.

* * * * *

Issued in Washington, DC, on July 18, 2022.

Scott M. Rosenbloom,

Manager, Airspace Rules and Regulations.

[FR Doc. 2022–15618 Filed 7–21–22; 8:45 am]

BILLING CODE 4910–13–P

DEPARTMENT OF TRANSPORTATION

Federal Aviation Administration

14 CFR Part 71

[Docket No. FAA–2022–0902; Airspace Docket No. 21–ANE–6]

RIN 2120–AA66

Proposed Amendment and Revocation of VOR Federal Airways; Northeast United States

AGENCY: Federal Aviation Administration (FAA), DOT.

ACTION: Notice of proposed rulemaking (NPRM).

SUMMARY: This action proposes to amend VHF Omnidirectional Range (VOR) Federal airways V–44, V–139 and V–268, and remove airways V–34, V–167, and V–308. This action supports the FAA's VOR Minimum Operational Network (MON) program.

DATES: Comments must be received on or before September 6, 2022.

ADDRESSES: Send comments on this proposal to the U.S. Department of Transportation, Docket Operations, 1200 New Jersey Avenue SE, West Building Ground Floor, Room W12–140, Washington, DC 20590; telephone: (800) 647–5527 or (202) 366–9826. You must identify FAA Docket No. FAA–2022–0902; Airspace Docket No. 21–ANE–6 at the beginning of your comments. You may also submit comments through the internet at *https://www.regulations.gov.*

FAA Order JO 7400.11F, Airspace Designations and Reporting Points, and subsequent amendments can be viewed online at *https://www.faa.gov/air_traffic/publications/.* For further information, you can contact the Rules and Regulations Group, Federal Aviation Administration, 800 Independence Avenue SW, Washington, DC 20591; telephone: (202) 267–8783.

FOR FURTHER INFORMATION CONTACT: Paul Gallant, Rules and Regulations Group, Office of Policy, Federal Aviation Administration, 800 Independence Avenue SW, Washington, DC 20591; telephone: (202) 267–8783.

SUPPLEMENTARY INFORMATION:

Authority for This Rulemaking

The FAA's authority to issue rules regarding aviation safety is found in Title 49 of the United States Code. Subtitle I, Section 106 describes the authority of the FAA Administrator. Subtitle VII, Aviation Programs, describes in more detail the scope of the agency's authority. This rulemaking is promulgated under the authority described in Subtitle VII, Part A, Subpart I, Section 40103. Under that section, the FAA is charged with prescribing regulations to assign the use of the airspace necessary to ensure the safety of aircraft and the efficient use of airspace. This regulation is within the scope of that authority as it would modify the VOR Federal airway route structure in the eastern United States to maintain the efficient flow of air traffic.

Comments Invited

Interested parties are invited to participate in this proposed rulemaking by submitting such written data, views, or arguments as they may desire. Comments that provide the factual basis supporting the views and suggestions presented are particularly helpful in developing reasoned regulatory decisions on the proposal. Comments are specifically invited on the overall regulatory, aeronautical, economic, environmental, and energy-related aspects of the proposal.

Communications should identify both docket numbers (FAA Docket No. FAA–2022–0902; Airspace Docket No. 21–ANE–6) and be submitted in triplicate to the Docket Management Facility (see **ADDRESSES** section for address and phone number). You may also submit comments through the internet at *https://www.regulations.gov.*

Commenters wishing the FAA to acknowledge receipt of their comments on this action must submit with those comments a self-addressed, stamped postcard on which the following statement is made: ''Comments to FAA Docket No. FAA–2022–0902; Airspace Docket No. 21–ANE–6.'' The postcard will be date/time stamped and returned to the commenter.

All communications received on or before the specified comment closing date will be considered before taking action on the proposed rule. The proposal contained in this action may be changed in light of comments received. A report summarizing each substantive public contact with FAA personnel concerned with this rulemaking will be filed in the docket.

Availability of NPRM's

An electronic copy of this document may be downloaded through the internet at *https://www.regulations.gov.* Recently published rulemaking documents can also be accessed through the FAA's web page at *https://www.faa.gov/air_traffic/publications/airspace_amendments/.*

You may review the public docket containing the proposal, any comments received and any final disposition in person in the Dockets Office (see **ADDRESSES** section for address and phone number) between 9:00 a.m. and 5:00 p.m., Monday through Friday, except Federal holidays. An informal docket may also be examined during normal business hours at the office of the Eastern Service Center, Federal Aviation Administration, Room 210, 1701 Columbia Ave., College Park, GA, 30337.

Availability and Summary of Documents for Incorporation by Reference

This document proposes to amend FAA Order JO 7400.11F, Airspace Designations and Reporting Points, dated August 10, 2021, and effective September 15, 2021. FAA Order JO 7400.11F is publicly available as listed in the **ADDRESSES** section of this proposed rule. FAA Order JO 7400.11F lists Class A, B, C, D, and E airspace

areas, air traffic service routes, and reporting points.

The Proposal

The FAA is proposing an amendment to 14 CFR part 71 to amend VOR Federal airways V–44, V–139 and V–268; and remove airways V–34, V–167, and V–308. The proposed route changes are described below.

V–34: V–34 extends from Rochester, NY, to Nantucket, MA. The FAA proposes to remove V–34 in its entirety. United States Area Navigation (RNAV) route T–318 will be published as a partial overlay and replacement for V–34.

V–44: V–44 consists of two parts: From Columbia, MO, to Samsville, IL; and From Falmouth, KY, to Albany, NY. This notice proposes to amend the second part of the route by removing the segments from the intersection of the Martinsburg, WV 094° and the Baltimore, MD 300° radials, to Deer Park, NY. Therefore, the second part of the route would extend From Falmouth, KY; York, KY; Parkersburg, WV; Morgantown, WV; to Martinsburg, WV. A third part of V–44 would extend from the intersection of the Deer Park 041° and Bridgeport, CT, 133° radials; Bridgeport; INT Bridgeport 324° and Pawling, NY, 160° radials; Pawling; INT Pawling 342° and Albany, NY, 181° radials; to Albany. As amended, V–44 would consist of three parts: From Columbia, MO, to Samsville, IL (as currently charted); From Falmouth, KY, to Martinsburg, WV; and From the intersection INT Deer Park 041° and Bridgeport, CT, 133° radials; to Albany, NY. RNAV route T–287 will be amended as a partial overlay and replacement for V–44. The wording ''The airspace within R–4001B, R–5002A, R–5002B, and R–5002E is excluded when active. The airspace within V–139 and V–308 airways is excluded.'' is removed from the route description.

V–139: V–139 extends from Florence, SC, to Kennebunk, ME. The FAA proposes to remove the route segments from Norfolk, VA, to Kennebunk, ME. As amended, V–139 would extend from Florence, SC, to the intersection of the New Bern, NC 006° and Norfolk, VA, 209° radials. The words ''The airspace below 2,000 feet MSL outside the United States, the airspace below 3,000 feet MSL between the Kennedy, NY, 087° and 141° radials, and the airspace within R–5202 and R–6604 are excluded.'' would be removed from the amended route because V–139 would no longer pass through that airspace. RNAV route T–287 will be amended as a partial overlay and replacement for V–139.

V–167: V–167 extends from Hancock, NY, to Kennebunk, ME. The FAA proposes to remove the route in its entirety. RNAV route T–318 will be published as a partial overlay and replacement for V–167.

V–268: V–268 extends from the intersection of the Morgantown, WV 010° and the Johnstown, PA 260° radials to Augusta, ME. This proposal would remove the segments from Westminster, MD, to Augusta, ME. As amended, V–268 would extend from the intersection of the Morgantown, WV 010° and the Johnstown, PA 260° radials, to Hagerstown, MD. The words ''The airspace within R–4001B and the airspace below 2,000 feet MSL outside the United States is excluded'' would be removed from the description because the V–268 would no longer pass through that airspace. RNAV route T–358 will be published as a partial overlay and replacement for V–268.

V–308: V–308 extends from Nottingham, MD, to Norwich, CT. The FAA proposes to remove the route in its entirety. RNAV route T–320 will be published as a partial overlay and replacement for V–308.

The full descriptions of the above routes are listed in the amendments to part 71 set forth below.

Domestic VOR Federal airways are published in paragraph 6010(a) of FAA Order JO 7400.11F, dated August 10, 2021, and effective September 15, 2021, which is incorporated by reference in 14 CFR 71.1. The VOR Federal airways listed in this document would be subsequently published or removed from FAA Order JO 7400.11.

FAA Order JO 7400.11, Airspace Designations and Reporting Points, is published yearly and effective on September 15.

Regulatory Notices and Analyses

The FAA has determined that this proposed regulation only involves an established body of technical regulations for which frequent and routine amendments are necessary to keep them operationally current. It, therefore: (1) is not a ''significant regulatory action'' under Executive Order 12866; (2) is not a ''significant rule'' under Department of Transportation (DOT) Regulatory Policies and Procedures (44 FR 11034; February 26, 1979); and (3) does not warrant preparation of a regulatory evaluation as the anticipated impact is so minimal. Since this is a routine matter that will only affect air traffic procedures and air navigation, it is certified that this proposed rule, when promulgated, will not have a significant economic impact on a substantial number of small entities under the criteria of the Regulatory Flexibility Act.

Environmental Review

This proposal will be subject to an environmental analysis in accordance with FAA Order 1050.1F, ''Environmental Impacts: Policies and Procedures'' prior to any FAA final regulatory action.

List of Subjects in 14 CFR Part 71

Airspace, Incorporation by reference, Navigation (air).

The Proposed Amendment

In consideration of the foregoing, the Federal Aviation Administration proposes to amend 14 CFR part 71 as follows:

PART 71—DESIGNATION OF CLASS A, B, C, D, AND E AIRSPACE AREAS; AIR TRAFFIC SERVICE ROUTES; AND REPORTING POINTS

■ 1. The authority citation for 14 CFR part 71 continues to read as follows:

Authority: 49 U.S.C. 106(f), 106(g); 40103, 40113, 40120; E.O. 10854, 24 FR 9565, 3 CFR, 1959–1963 Comp., p. 389.

§ 71.1 [Amended]

■ 2. The incorporation by reference in 14 CFR 71.1 of FAA Order JO 7400.11F, Airspace Designations and Reporting Points, dated August 10, 2021, and effective September 15, 2021, is amended as follows:

Paragraph 6010(a) Domestic VOR Federal Airways.

* * * * *

V–34 [Removed]

* * * * *

V–44 [Amended]

From Columbia, MO; INT Columbia 131° and Foristell, MO, 262° radials; Foristell; Centralia, IL; to Samsville, IL. From Falmouth, KY; York, KY; Parkersburg, WV; Morgantown, WV; to Martinsburg, WV. From: INT Deer Park 041° and Bridgeport, CT, 133° radials; Bridgeport; INT Bridgeport 324° and Pawling, NY, 160° radials; Pawling; INT Pawling 342° and Albany, NY, 181° radials; to Albany. The airspace below 2,000 feet MSL outside the United States is excluded.

* * * * *

V–139 [Amended]

From Florence, SC, via Wilmington, NC; New Bern, NC; to INT New Bern 006° and Norfolk, VA, 209° radials.

* * * * *

V–167 [Removed]

* * * * *

V–268 [Amended]

From INT Morgantown, WV, 010° and Johnstown, PA, 260° radials; Indian Head, PA; to Hagerstown, MD.

* * * * *

V–308 [Removed]

* * * * *

Issued in Washington, DC, on July 18, 2022.

Scott M. Rosenbloom,

Manager, Airspace Rules and Regulations.

[FR Doc. 2022–15619 Filed 7–21–22; 8:45 am]

BILLING CODE 4910–13–P

DEPARTMENT OF TRANSPORTATION

Federal Aviation Administration

14 CFR Part 71

[Docket No. FAA–2022–0905; Airspace Docket No. 21–AEA–26]

RIN 2120–AA66

Proposed Amendment and Revocation of VOR Federal Airways; Northeast United States

AGENCY: Federal Aviation Administration (FAA), DOT.

ACTION: Notice of proposed rulemaking (NPRM).

SUMMARY: This action proposes to amend VHF Omnidirectional Range (VOR) Federal airway V–10, and remove airways V–33, V–99, V–377, V–403, and V–405. This action supports the FAA's VOR Minimum Operational Network (MON) program.

DATES: Comments must be received on or before September 6, 2022.

ADDRESSES: Send comments on this proposal to the U.S. Department of Transportation, Docket Operations, 1200 New Jersey Avenue SE, West Building Ground Floor, Room W12–140, Washington, DC 20590; telephone: (800) 647–5527 or (202) 366–9826. You must identify FAA Docket No. FAA–2022–0905; Airspace Docket No. 21–AEA–26 at the beginning of your comments. You may also submit comments through the internet at *https://www.regulations.gov.*

FAA Order JO 7400.11F, Airspace Designations and Reporting Points, and subsequent amendments can be viewed online at *https://www.faa.gov/air_traffic/publications/.* For further information, you can contact the Rules and Regulations Group, Federal Aviation Administration, 800 Independence Avenue SW, Washington, DC 20591; telephone: (202) 267–8783.

FOR FURTHER INFORMATION CONTACT: Paul Gallant, Rules and Regulations Group, Office of Policy, Federal Aviation Administration, 800 Independence Avenue SW, Washington, DC 20591; telephone: (202) 267–8783.

SUPPLEMENTARY INFORMATION:

Authority for This Rulemaking

The FAA's authority to issue rules regarding aviation safety is found in Title 49 of the United States Code. Subtitle I, Section 106 describes the authority of the FAA Administrator. Subtitle VII, Aviation Programs, describes in more detail the scope of the agency's authority. This rulemaking is promulgated under the authority described in Subtitle VII, Part A, Subpart I, Section 40103. Under that section, the FAA is charged with prescribing regulations to assign the use of the airspace necessary to ensure the safety of aircraft and the efficient use of airspace. This regulation is within the scope of that authority as it would modify the VOR Federal airway route structure in the eastern United States to maintain the efficient flow of air traffic.

Comments Invited

Interested parties are invited to participate in this proposed rulemaking by submitting such written data, views, or arguments as they may desire. Comments that provide the factual basis supporting the views and suggestions presented are particularly helpful in developing reasoned regulatory decisions on the proposal. Comments are specifically invited on the overall regulatory, aeronautical, economic, environmental, and energy-related aspects of the proposal.

Communications should identify both docket numbers (FAA Docket No. FAA–2022–0905; Airspace Docket No. 21–AEA–26) and be submitted in triplicate to the Docket Management Facility (see **ADDRESSES** section for address and phone number). You may also submit comments through the internet at *https://www.regulations.gov.*

Commenters wishing the FAA to acknowledge receipt of their comments on this action must submit with those comments a self-addressed, stamped postcard on which the following statement is made: ''Comments to FAA Docket No. FAA–2022–0905; Airspace Docket No. 21–AEA–26.'' The postcard will be date/time stamped and returned to the commenter.

All communications received on or before the specified comment closing date will be considered before taking action on the proposed rule. The proposal contained in this action may be changed in light of comments received. A report summarizing each substantive public contact with FAA personnel concerned with this rulemaking will be filed in the docket.

Availability of NPRM's

An electronic copy of this document may be downloaded through the internet at *https://www.regulations.gov.* Recently published rulemaking documents can also be accessed through the FAA's web page at *https://www.faa.gov/air_traffic/publications/airspace_amendments/.*

You may review the public docket containing the proposal, any comments received and any final disposition in person in the Dockets Office (see **ADDRESSES** section for address and phone number) between 9:00 a.m. and 5:00 p.m., Monday through Friday, except Federal holidays. An informal docket may also be examined during normal business hours at the office of the Eastern Service Center, Federal Aviation Administration, Room 210, 1701 Columbia Ave., College Park, GA, 30337.

Availability and Summary of Documents for Incorporation by Reference

This document proposes to amend FAA Order JO 7400.11F, Airspace Designations and Reporting Points, dated August 10, 2021, and effective September 15, 2021. FAA Order JO 7400.11F is publicly available as listed in the **ADDRESSES** section of this proposed rule. FAA Order JO 7400.11F lists Class A, B, C, D, and E airspace areas, air traffic service routes, and reporting points.

The Proposal

The FAA is proposing an amendment to 14 CFR part 71 to amend VOR Federal airway V–10, and remove airways V–33, V–99, V–377, V–403, and V–405. The proposed route changes are described below.

V–10: V–10 consists of three parts extending from Pueblo, CO, to the intersection of the Bradford, IL 058° and the Joliet, IL 287° radials; from the intersection of the Chicago Heights, IL 358° and the Gipper, IL 271° radials to Litchfield, MI; and from Youngstown, OH, to Lancaster, PA. The FAA proposes to remove the segments from Youngstown, OH, to Lancaster, PA. These segments are no longer used by air traffic control (ATC) and no overlay is required.

V–33: V–33 extends from Harcum, VA, to Keating, PA. This action proposes to remove V–33 in its entirety. United States Area Navigation (RNAV) route T–291 is being extended to replace a segment of V–33, and T–307 will be

published as a partial overlay and replacement for V–33.

V–99: V–99 extends from LaGuardia, NY, to Hartford, CT. The FAA proposes to remove this route in its entirety. The route is no longer used by ATC and no overlay is required.

V–377: V–377 extends from Montebello, VA, to Harrisburg, PA. This action proposes to remove V–377 in its entirety. RNAV route T–299 will be amended as an overlay and replacement for V–377.

V–403: V–403 extends from Solberg, NJ, to the intersection of the Pottstown, PA 222° and the Baltimore, MD 034° radials. The FAA proposes to remove this route in tis entirety. RNAV route T–443 will be published as an overlay and replacement for V–403.

V–405: V–405 extends from the intersection of the Pottstown, PA 222° and the Baltimore, MD 034° radials to Marthas Vinyard, MA. The FAA proposes to remove the route in its entirety. The route is no longer used by ATC and no overlay is required.

The full descriptions of the above routes are listed in the amendments to part 71 set forth below.

Domestic VOR Federal airways are published in paragraph 6010(a) of FAA Order JO 7400.11F, dated August 10, 2021, and effective September 15, 2021, which is incorporated by reference in 14 CFR 71.1. The VOR Federal airways listed in this document would be subsequently published and removed from FAA Order JO 7400.11.

FAA Order JO 7400.11, Airspace Designations and Reporting Points, is published yearly and effective on September 15.

Regulatory Notices and Analyses

The FAA has determined that this proposed regulation only involves an established body of technical regulations for which frequent and routine amendments are necessary to keep them operationally current. It, therefore: (1) is not a ''significant regulatory action'' under Executive Order 12866; (2) is not a ''significant rule'' under Department of Transportation (DOT) Regulatory Policies and Procedures (44 FR 11034; February 26, 1979); and (3) does not warrant preparation of a regulatory evaluation as the anticipated impact is so minimal. Since this is a routine matter that will only affect air traffic procedures and air navigation, it is certified that this proposed rule, when promulgated, will not have a significant economic impact on a substantial number of small entities under the criteria of the Regulatory Flexibility Act.

Environmental Review

This proposal will be subject to an environmental analysis in accordance with FAA Order 1050.1F, ''Environmental Impacts: Policies and Procedures'' prior to any FAA final regulatory action.

List of Subjects in 14 CFR Part 71

Airspace, Incorporation by reference, Navigation (air).

The Proposed Amendment

In consideration of the foregoing, the Federal Aviation Administration proposes to amend 14 CFR part 71 as follows:

PART 71—DESIGNATION OF CLASS A, B, C, D, AND E AIRSPACE AREAS; AIR TRAFFIC SERVICE ROUTES; AND REPORTING POINTS

■ 1. The authority citation for 14 CFR part 71 continues to read as follows:

Authority: 49 U.S.C. 106(f), 106(g); 40103, 40113, 40120; E.O. 10854, 24 FR 9565, 3 CFR, 1959–1963 Comp., p. 389.

§ 71.1 [Amended]

■ 2. The incorporation by reference in 14 CFR 71.1 of FAA Order JO 7400.11F, Airspace Designations and Reporting Points, dated August 10, 2021, and effective September 15, 2021, is amended as follows:

Paragraph 6010(a) Domestic VOR Federal Airways

* * * * *

V–10 [Amended]

From Pueblo, CO; 18 miles, 48 miles, 60 MSL, Lamar, CO; Garden City, KS; Dodge City, KS; Hutchinson, KS; Emporia, KS; INT Emporia 063°and Napoleon, MO, 243° radials; Napoleon; Kirksville, MO; Burlington, IA; Bradford, IL; to INT Bradford 058° and Joliet, IL, 287° radials. From INT Chicago Heights, IL, 358° and Gipper, MI, 271° radials; Gipper; to Litchfield, MI.

* * * * *

V–33 [Removed]

* * * * *

V–99 [Removed]

* * * * *

V–377 [Removed]

* * * * *

V–403 [Removed]

* * * * *

V–405 [Removed]

* * * * *

Issued in Washington, DC, on July 18, 2022.

Scott M. Rosenbloom,

Manager, Airspace Rules and Regulations.

[FR Doc. 2022–15617 Filed 7–21–22; 8:45 am]

BILLING CODE 4910–13–P

ENVIRONMENTAL PROTECTION AGENCY

40 CFR Part 52

[EPA–R06–OAR–2016–0688; FRL–9955–01–R6]

Air Approval Plans; Louisiana; Repeal of Excess Emissions Related Provisions

AGENCY: Environmental Protection Agency (EPA).

ACTION: Proposed rule.

SUMMARY: Pursuant to the Federal Clean Air Act (CAA, the Act), the Environmental Protection Agency (EPA) is proposing to approve a State Implementation Plan (SIP) revision submitted by the State of Louisiana, through the Louisiana Department of Environmental Quality (LDEQ), on November 20, 2016. The submittal is in response to the EPA's national SIP call of June 12, 2015, concerning excess emissions during periods of Startup, Shutdown, and Malfunction (SSM). The submittal requests the removal of certain provisions identified in the 2015 SIP call from the Louisiana SIP. EPA is also proposing to determine that the removal of the substantially inadequate provisions from the SIP corrects certain deficiencies identified in the June 12, 2015 SIP call.

DATES: Comments must be received on or before August 22, 2022.

ADDRESSES: Submit your comments, identified by Docket No. EPA–R06–OAR–2016–0688 at *https://www.regulations.gov* or via email to *Shar.alan@epa.gov.* Follow the online instructions for submitting comments. Once submitted, comments cannot be edited or removed from *Regulations.gov*. EPA may publish any comment received to its public docket. Do not submit electronically any information you consider to be Confidential Business Information (CBI) or other information whose disclosure is restricted by statute. Multimedia submissions (audio, video, etc.) must be accompanied by a written comment. The written comment is considered the official comment and should include discussion of all points you wish to make. EPA will generally not consider comments or comment contents located outside of the primary

submission (*i.e.,* on the web, cloud, or other file sharing system). For additional submission methods, please contact Mr. Alan Shar, (214) 665–6691, *Shar.alan@epa.gov.* For the full EPA public comment policy, information about CBI or multimedia submissions, and general guidance on making effective comments, please visit *https://www.epa.gov/dockets/commenting-epa-dockets.*

Docket: The index to the docket for this action is available electronically at *www.regulations.gov* and in hard copy at the EPA Region 6 Office, 1201 Elm Street, Suite 500, Dallas, Texas 75270. While all documents in the docket are listed in the index, some information may be publicly available only at the hard copy location (*e.g.,* copyrighted material), and some may not be publicly available at either location (*e.g.,* CBI).

FOR FURTHER INFORMATION CONTACT: Mr. Alan Shar, Regional Haze and SO_2 Section, EPA Region 6 Office, 1201 Elm Street, Suite 500, Dallas, Texas 75270, (214) 665–6691, *Shar.Alan@epa.gov.* Out of an abundance of caution for members of the public and our staff, the EPA Region 6 office may be closed to the public to reduce the risk of transmitting COVID–19. We encourage the public to submit comments via *https://www.regulations.gov,* as there will be a delay in processing mail and no courier or hand deliveries will be accepted. Please call or email the contact listed above if you need alternative access to material indexed but not provided in the docket.

SUPPLEMENTARY INFORMATION: Throughout this document ''we,'' ''us,'' and ''our'' means the EPA.

Table of Contents

I. Background
A. EPA's 2015 SSM SIP Action
B. Louisiana's Provisions Related to Excess Emissions
II. Analysis of SIP Submission
A. Removal of LAC 33:III.1507(A) and LAC 33:III.1507(B) Exemptions
B. Removal of LAC 33:III.1107(A) Exemption
C. Removal of LAC 33:III.2153(B)(1)(i) Exemption
D. Removal of LAC 33:III.2307(C)(1)(a) and LAC 33:III.2307(C)(2)(a) Exemptions
III. Proposed Action
IV. Incorporation by Reference
V. Environmental Justice Considerations
VI. Statutory and Executive Orders Reviews

I. Background

A. EPA's 2015 SSM SIP Action

On February 22, 2013, the EPA issued a **Federal Register** notice of proposed rulemaking outlining EPA's policy at the time with respect to SIP provisions related to periods of SSM. EPA analyzed specific SSM SIP provisions and explained how each one either did or did not comply with the CAA with regard to excess emission events.[1] For each SIP provision that the EPA determined to be inconsistent with the CAA, the EPA proposed to find that the existing SIP provision was substantially inadequate to meet CAA requirements and thus proposed to issue a SIP call under CAA section 110(k)(5). On September 17, 2014, the EPA issued a document supplementing and revising what the Agency had previously proposed on February 22, 2013, in light of a D.C. Circuit decision that determined the CAA precludes authority of the EPA to create affirmative defense provisions. EPA outlined its updated policy that affirmative defense SIP provisions are not consistent with CAA requirements. EPA proposed in the supplemental proposal document to apply its revised interpretation of the CAA to specific affirmative defense SIP provisions and proposed SIP calls for those provisions where appropriate (79 FR 55920, September 17, 2014).

On June 12, 2015, pursuant to CAA section 110(k)(5), the EPA finalized ''State Implementation Plans: Response to Petition for Rulemaking; Restatement and Update of EPA's SSM Policy Applicable to SIPs; Findings of Substantial Inadequacy; and SIP Calls To Amend Provisions Applying to Excess Emissions During Periods of Startup, Shutdown and Malfunction,'' (80 FR 33839 June 12, 2015), hereafter referred to as the ''2015 SSM SIP Action.'' The 2015 SSM SIP Action clarified, restated, and updated the EPA's interpretation that SSM exemption and affirmative defense SIP provisions are inconsistent with CAA requirements. The 2015 SSM SIP Action found that certain SIP provisions in 36 states were substantially inadequate to meet CAA requirements and issued a SIP call to those states to submit SIP revisions to address the inadequacies. EPA established an 18-month deadline by which the affected states had to submit such SIP revisions. States were required to submit corrective revisions to their SIPs in response to the SIP calls by November 22, 2016.

EPA issued a Memorandum in October 2020 (2020 Memorandum), which stated that certain provisions governing SSM periods in SIPs could be viewed as consistent with CAA requirements.[2] Importantly, the 2020 Memorandum stated that it ''did not alter in any way the determinations made in the 2015 SSM SIP Action that identified specific state SIP provisions that were substantially inadequate to meet the requirements of the Act.'' Accordingly, the 2020 Memorandum had no direct impact on the SIP call issued to Louisiana in 2015. The 2020 Memorandum did, however, indicate the EPA's intent at the time to review SIP calls that were issued in the 2015 SSM SIP Action to determine whether the EPA should maintain, modify, or withdraw particular SIP calls through future agency actions.

On September 30, 2021, EPA's Deputy Administrator withdrew the 2020 Memorandum and announced EPA's return to the policy articulated in the 2015 SSM SIP Action (2021 Memorandum).[3] As articulated in the 2021 Memorandum, SIP provisions that contain exemptions or affirmative defense provisions are not consistent with CAA requirements and, therefore, generally are not approvable if contained in a SIP submission. This policy approach is intended to ensure that all communities and populations, including overburdened communities, receive the full health and environmental protections provided by the CAA.[4] The 2021 Memorandum also retracted the prior statement from the 2020 Memorandum of EPA's plans to review and potentially modify or withdraw particular SIP calls. That statement no longer reflects the EPA's intent. EPA intends to implement the principles laid out in the 2015 SSM SIP Action as the agency takes action on SIP submissions, including Louisiana's SIP submittal provided in response to the 2015 SIP call.

B. Louisiana's Provisions Related to Excess Emissions

As a part of EPA's June 12, 2015 SSM SIP Action, EPA made a finding that certain provisions in the Louisiana SIP are substantially inadequate to meet CAA requirements because they contain exemptions from otherwise applicable SIP emission limitations, and thus

[1] State Implementation Plans: Response to Petition for Rulemaking; Findings of Substantial Inadequacy; and SIP Calls To Amend Provisions Applying to Excess Emissions During Periods of Startup, Shutdown, and Malfunction, (78 FR 12460) Feb. 22, 2013.

[2] October 9, 2020, Memorandum ''Inclusion of Provisions Governing Periods of Startup, Shutdown, and Malfunctions in State Implementation Plans,'' from Andrew R. Wheeler, Administrator.

[3] September 30, 2021, Memorandum ''Withdrawal of the October 9, 2020, Memorandum Addressing Startup, Shutdown, and Malfunctions in State Implementation Plans and Implementation of the Prior Policy,'' from Janet McCabe, Deputy Administrator.

[4] Section J, June 12, 2015 (80 FR 33985).

issued a SIP call[5] with respect to these provisions. The SIP-called provisions included the following sections of the Louisiana Administrative Code (LAC), Title 33, Part III air rules that had been previously approved into the Louisiana SIP: 33:III.2153(B)(1)(i), LAC 33:III.2201(C)(8), LAC 33:III.1107(A), LAC 33:III.1507(A)(1), LAC 33:III.1507(B)(1), LAC 33:III.2307(C)(1)(a) and LAC 33:III.2307(C)(2)(a).

On October 20, 2016, LDEQ repealed LAC 33:III.2153(B)(1)(i), LAC 33:III.1107(A), LAC 33:III.1507(A)(1), LAC 33:III.1507(B)(1), LAC 33:III.2307(C)(1)(a) and LAC 33:III.2307(C)(2)(a) from State law. Then by letter dated November 22, 2016, LDEQ requested the removal of the aforementioned provisions from the Louisiana SIP, in response to EPA's 2015 SSM SIP Action.[6]

II. Analysis of SIP Submission

A. Removal of LAC 33:III.1507(A) and LAC 33:III.1507(B) Exemptions

LAC 33:III.1507(A) and LAC 33:III.1507(B) were approved by the EPA into the Louisiana SIP on July 15, 1993 (80 FR 33975–6). These provisions apply to sulfuric acid plants not subject to the requirements in 40 CFR 60.82 and 60.83 of 40 CFR part 60, subpart H. LAC 33:III.1507(A) states that ''a four-hour (continuous) start-up exemption from the SO_2 and sulfuric acid mist emission limitations of LAC 33:III.1503(A) will be authorized by the administrative authority for facilities not subject to 40 CFR 60.82 and 60.83.''[7] LAC 33:III.1507(B) provides a similar exemption from the SO_2 and sulfuric acid mist emission limitations in LAC 33:III.1503(A) ''where upsets have caused excessive emissions and on-line operating changes will eliminate a temporary condition.''[8] In its November 22, 2016 SIP submittal, LDEQ reports that no sulfuric acid plants are eligible for the aforementioned exemptions because 40 CFR part 60, subpart H (Standards of Performance for Sulfuric Acid Plants) applies to every sulfuric acid plant located within the State. If EPA approves the removal of these repealed provisions from the SIP, all sulfuric acid plants in Louisiana will be subject to the emission limitations in LAC 33:III.1503(A) of the Louisiana SIP and no longer be able to use the two exemptions that were provided by LAC 33:III.1507(A) and LAC 33:III.1507(B).[9] Furthermore, the removal of these two exemptions from the Louisiana SIP will not result in any emission increases and will not interfere with the attainment of the National Ambient Air Quality Standards (NAAQS), reasonable further progress, or any other requirement of the CAA. Therefore, the proposed approval to remove LAC 33:III.1507(A) and LAC 33:III.1507.B from the Louisiana SIP is consistent with the requirements of CAA sections 110(l) and 193.

B. Removal of LAC 33:III.1107(A) Exemption

LAC 33:III.1107(A) was originally approved by the EPA into the Louisiana SIP on March 8, 1989 (54 FR 9795), and later codified on July 5, 2011 (76 FR 38977). LAC 33:III.1107(A) allows LDEQ to grant an exemption from the provisions of LAC 33:III.1105 (establishing a 20% opacity limit during certain flaring events) ''during start-up and shutdown periods if the flaring was not the result of failure to maintain or repair equipment.'' If EPA approves the removal of these repealed provisions from the SIP, sources with flaring events covered by LAC 33:III.1105 will no longer be able to use the exemption that had been provided by LAC 33:III.1107(A).[10] Furthermore, the removal of this exemption from the Louisiana SIP will not result in any emission increases and will not interfere with the attainment of the NAAQS, reasonable further progress, or any other requirement of the CAA. Therefore, the proposed approval to remove LAC 33:III.1107(A) from the Louisiana SIP is consistent with the requirements of CAA sections 110(l) and 193.

C. Removal of LAC 33:III.2153(B)(1)(i) Exemption

LAC 33:III.2153(B)(1)(i) was originally approved by the EPA into the Louisiana SIP on June 20, 2002 (67 FR 41840), and later codified on July 5, 2011 (76 FR 38977). LAC 33:III.2153 (limiting volatile organic compound (VOC) emissions from industrial wastewater) requires ''affected VOC wastewater streams'' to be controlled. More specifically, LAC 33:III.2153(B)(1)(d)(i) requires vents on covers and on certain junction boxes to be ''equipped with either a control device or a vapor recovery system that maintains a minimum control efficiency of 90 percent VOC removal or a VOC concentration of less than or equal to 50 parts per million by volume.'' LAC 33:III.2153(B)(1)(i) provides that the requisite control device or recovery device is ''not . . . required to meet the 90 percent removal efficiency or 50 parts per million volume basis concentration during periods of malfunction or maintenance on the devices for periods not to exceed 336 hours per year.'' If EPA approves the removal of these repealed provisions from the SIP, sources with affected VOC wastewater streams subject to LAC 33:III.2153 will no longer be able to use the exemption that had been provided by LAC 33:III.2153(b)(1)(i).[11] Furthermore, the removal of this exemption from the Louisiana SIP will not result in any emission increases and will not interfere with the attainment of the NAAQS, reasonable further progress, or any other requirement of the CAA. Therefore, the proposed approval to remove LAC 33:III.2153(B)(1)(i) from the Louisiana SIP is consistent with the requirements of CAA sections 110(l) and 193.

[5] CAA section 110(k)(5).

[6] On June 9, 2017, LDEQ submitted a SIP revision related to LAC 33:III.2201(C)(8); however, we are not proposing to act on that SIP submittal at this time. We intend to take action on the revisions to LAC 33:III.2201(C)(8) separately in a future rulemaking action.

[7] EPA issued a SIP call for LAC 33:III.1507(A)(1) on June 12, 2015 (80 FR 33967). However, LDEQ's November 22, 2016 SIP submittal requests removal of LAC 33:III.1507(A) (comprised of (A)(1) and (A)(2)) from the Louisiana SIP. LAC 33:III.1507(A)(2) states, ''[t]his provision is applicable to infrequent start-ups only. Before the exemption can be granted the administrative authority must determine the excess emissions were not the result of failure to maintain or repair equipment. In addition, the duration of excess emission must be minimized and no ambient air quality standard may be jeopardized.'' LAC 33:III.1507(A)(2) and LAC 33:III.1507(A)(1) are interrelated and the EPA is proposing to approve LDEQ's request to remove both provisions—LAC 33:III.1507(A)(1) and (A)(2)—from the Louisiana SIP.

[8] EPA issued a SIP call for LAC 33:III.1507(B)(1) on June 12, 2015 (80 FR 33967). However, LDEQ's November 22, 2016 SIP submittal requests removal of LAC 33:III.1507(B) (comprised of (B)(1) and (B)(2)) from the Louisiana SIP. LAC 33:III.1507(B)(2) states, ''[t]his provision is applicable to infrequent on-line adjustments only. Before the exemption can be granted the administrative authority must determine the excess emissions were not the result of failure to maintain or repair equipment. In addition, the duration of excess emissions must be minimized and no ambient air quality standard may be jeopardized.'' LAC 33:III.1507(B)(2) and LAC 33:III.1507(B)(1) are interrelated and the EPA is proposing to approve LDEQ's request to remove both provisions—LAC 33:III.1507(B)(1) and (B)(2)—from the Louisiana SIP.

[9] As noted earlier, LDEQ repealed the exemptions in LAC 33:III.1507(A) and LAC 33:III.1507(B) as a matter of state law on October 20, 2016.

[10] As noted earlier, LDEQ repealed the exemption in LAC 33:III.1107(A) as a matter of state law on October 20, 2016.

[11] As noted earlier, LDEQ repealed the exemption in LAC 33:III.2153(B)(1)(i) as a matter of state law on October 20, 2016.

D. Removal of LAC 33:III.2307(C)(1)(a) and LAC 33:III.2307(C)(2)(a) Exemptions

LAC 33:III.2307(C)(1)(a) and LAC33:III.2307(C)(2)(a) were originally approved by the EPA into the Louisiana SIP on March 8, 1989 (54 FR 9795), and later codified on July 5, 2011 (76 FR 38977). LAC 33:III.2307(C) applies to nitric acid plants that are not subject to 40 CFR part 60, subpart G (Standards of Performance for Nitric Acid Plants). LAC 33:III.2307(C)(1)(a) provides a four-hour start-up exemption from the NO_X emission limitation of LAC 33:III.2307(D), while LAC 33:III.2307(C)(2)(a) provides a similar exemption where upsets have caused excessive emissions and on-line operating changes will eliminate a temporary condition. If EPA approves the removal of these repealed provisions from the SIP, nitric acid plants subject to the NO_X emission limitation of LAC III.2307(D) will no longer be able to use the exemptions that had been provided by LAC 33:III.2307(C)(1)(a) and LAC 33:III.2307(C)(2)(a).[12] Furthermore, the removal of this exemption from the Louisiana SIP will not result in any emission increases and will not interfere with the attainment of the NAAQS, reasonable further progress, or any other requirement of the CAA. Therefore, the proposed approval to remove LAC 33:III.2307(C)(1)(a) and LAC 33:III.2307(C)(2)(a) from the Louisiana SIP is consistent with the requirements of CAA sections 110(l) and 193.

III. Proposed Action

The EPA is proposing to approve a revision to the Louisiana SIP submitted by LDEQ on November 22, 2016, in response to EPA's national SIP call of June 12, 2015 concerning excess emissions during periods of SSM. We are proposing to approve the removal of LAC 33:III.1107(A), LAC 33:III.1507(A), LAC 33:III.1507(B), LAC 33:III.2153(B)(1)(i), LAC 33:III.2307(C)(1)(a), and LAC 33:III.2307(C)(2)(a) from the Louisiana SIP in accordance with section 110 of the Act. The EPA is further proposing to determine that this SIP revision corrects the deficiencies identified in the June 12, 2015 SIP call related to the above-referenced provisions. EPA is not reopening the 2015 SSM SIP Action and is only taking comment on whether the proposed SIP revision is consistent with CAA requirements and whether it address the substantial inadequacies in the specific Louisiana SIP provisions identified in the 2015 SSM SIP Action.

IV. Incorporation by Reference

In this action, we are proposing to include in a final rule regulatory text that includes incorporation by reference. In accordance with the requirements of 1 CFR 51.5, we are proposing to incorporate by reference revisions to Louisiana's regulations, as described in the Proposed Action section above. The EPA has made, and will continue to make, these documents generally available electronically through *www.regulations.gov* and in hard copy at the EPA Region 6 office.

V. Environmental Justice Considerations

Executive Order 12898 (Federal Actions To Address Environmental Justice in Minority Populations and Low-Income Populations, 59 FR 7629, Feb. 16, 1994) directs federal agencies to identify and address ''disproportionately high and adverse human health or environmental effects'' of their actions on minority populations and low-income populations to the greatest extent practicable and permitted by law. The EPA defines environmental justice (EJ) as ''the fair treatment and meaningful involvement of all people regardless of race, color, national origin, or income with respect to the development, implementation, and enforcement of environmental laws, regulations, and policies.'' The EPA further defines the term fair treatment to mean that ''no group of people should bear a disproportionate burden of environmental harms and risks, including those resulting from the negative environmental consequences of industrial, governmental, and commercial operations or programs and policies.''[13] EPA is providing additional analysis of environmental justice associated with this action for the purpose of providing information to the public.

EPA reviewed demographic data, which provides an assessment of individual demographic groups of the populations living within Louisiana.[14] The EPA then compared the data to the national average for each of the demographic groups.[15] The results of the demographic analysis indicate that, for populations within Louisiana, the percent people of color (persons who reported their race as a category other than White alone (not Hispanic or Latino)) is similar to the national average (41.6 percent of Louisiana's population compared to 39.9 percent nationally). The percent of persons who reported their race as Black or African American alone is significantly higher than the national average (32.8 percent versus 13.4 percent). The percentage of Louisiana's population living in poverty is 17.8 percent, which is higher than the national average of 11.4 percent. The percent of people over 25 with a high school diploma in Louisiana is similar to the national average (85.9 percent versus 88.5 percent), while the percent with a Bachelor's degree or higher is lower than the national average (24.9 percent versus 32.9 percent).

Communities in close proximity to industrial sources may be subject to disproportionate environmental impacts of excess emissions. Short- and/or long-term exposure to air pollution has been associated with a wide range of human health effects including increased respiratory symptoms, hospitalization for heart or lung diseases, and even premature death.[16] Excess emissions during startups, shutdowns, and malfunctions can be considerably higher than emissions under normal steady-state operations. As to all population groups within Louisiana, as explained below, we believe that this proposed action will be beneficial and may reduce impacts. Exemptions for excess emissions during periods of SSM undermine the ability of the SIP to attain and maintain the NAAQS, to protect Prevention of Significant Deterioration increments, to improve visibility and to meet other CAA requirements. Such exemption provisions have the potential to lessen the incentive for development of control strategies that are effective at reducing emissions during certain modes of sources' operations such as startups and shutdowns or to take prompt steps to rectify malfunctions. Removal of these exemption provisions from the

[12] As noted earlier, LDEQ repealed the exemptions in LAC 33:III.2307(C)(1)(a) and LAC 33:III.2307(C)(2)(a) as a matter of state law on October 20, 2016. In its November 22, 2016 SIP submittal, LDEQ notes that it identified only one nitric acid plant not subject to 40 CFR part 60, subpart G—namely, the Nitric Acid Train 4 (NNA4–1, EQT 0007) located at PCS Nitrogen Fertilizer's (PCS's) Geismar Agricultural Nitrogen & Phosphate Plant (Agency Interest No. 3732). LDEQ also noted that a Consent Decree between EPA, LDEQ, and PCS (Civil Action No. 14–707–BAJ–SCR), entered February 26, 2014, required PCS to install NO_X control equipment (*i.e.,* selective catalytic reduction, or SCR) on Nitric Acid Train 4, and therefore the exemptions provided by LAC 33:III.2307(C) are no longer needed.

[13] *https://www.epa.gov/environmentaljustice/learn-about-environmental-justice.*

[14] See the United States Census Bureau's QuickFacts on Louisiana at *https://www.census.gov/quickfacts/fact/table/LA,US/PST045221.*

[15] *Id.*

[16] *https://www.epa.gov/air-quality-management-process/managing-air-quality-human-health-environmental-and-economic#what* (URL dated 03/16/2022).

Louisiana SIP will bring the treatment of excess emissions in the SIP into line with CAA requirements; thus, sources in the State will no longer be able to use the repealed exemptions and will have greater incentives to control their air emissions. This proposed action is intended to ensure that all communities and populations across Louisiana and downwind areas, including overburdened communities, receive the full human health and environmental protection provided by the CAA. We believe that this rule, if finalized, will not have disproportionately high or adverse human health or environmental effects on communities with environmental justice concerns.

VI. Statutory and Executive Order Reviews

Under the Act, the Administrator is required to approve a SIP submission that complies with the provisions of the Act and applicable Federal regulations. 42 U.S.C. 7410(k); 40 CFR 52.02(a). Thus, in reviewing SIP submissions, EPA's role is to approve state choices, provided that they meet the criteria of the Act. Accordingly, this action merely proposes to approve state law as meeting Federal requirements and does not impose additional requirements beyond those imposed by state law. For that reason, this action:

- Is not a ''significant regulatory action'' subject to review by the Office of Management and Budget under Executive Order 12866 (58 FR 51735, October 4, 1993) and 13563 (76 FR 3821, January 21, 2011);
- Does not impose an information collection burden under the provisions of the Paperwork Reduction Act (44 U.S.C. 3501 *et seq.*);
- Is certified as not having a significant economic impact on a substantial number of small entities under the Regulatory Flexibility Act (5 U.S.C. 601 *et seq.*);
- Does not contain any unfunded mandate or significantly or uniquely affect small governments, as described in the Unfunded Mandates Reform Act of 1995 (Pub. L. 104–4);
- Does not have federalism implications as specified in Executive Order 13132 (64 FR 43255, August 10, 1999);
- Is not an economically significant regulatory action based on health or safety risks subject to Executive Order 13045 (62 FR 19885, April 23, 1997);
- Is not a significant regulatory action subject to Executive Order 13211 (66 FR 28355, May 22, 2001);
- Is not subject to requirements of section 12(d) of the National Technology Transfer and Advancement Act of 1995 (15 U.S.C. 272 note) because application of those requirements would be inconsistent with the Act; and
- Does not provide EPA with the discretionary authority to address, as appropriate, disproportionate human health or environmental effects, using practicable and legally permissible methods, under Executive Order 12898 (59 FR 7629, February 16, 1994).

In addition, the SIP is not approved to apply on any Indian reservation land or in any other area where EPA or an Indian tribe has demonstrated that a tribe has jurisdiction. In those areas of Indian country, the proposed rule does not have tribal implications and will not impose substantial direct costs on tribal governments or preempt tribal law as specified by Executive Order 13175 (65 FR 67249, November 9, 2000).

List of Subjects in 40 CFR Part 52

Environmental protection, Air pollution control, Carbon monoxide, Hydrocarbons, Incorporation by reference, Intergovernmental relations, Lead, Nitrogen dioxide, Particulate matter, Sulfur dioxide, Reporting and recordkeeping requirements, Volatile organic compounds.

(Authority: 42 U.S.C. 7401 *et seq.*)

Dated: July 13, 2022.

Earthea Nance,

Regional Administrator, Region 6.

[FR Doc. 2022–15422 Filed 7–21–22; 8:45 am]

BILLING CODE 6560–50–P

ENVIRONMENTAL PROTECTION AGENCY

40 CFR Parts 52 and 81

[EPA–R09–OAR–2022–0525; FRL–9961–01–R9]

Finding of Failure To Attain and Reclassification of Las Vegas Area as Moderate for the 2015 Ozone National Ambient Air Quality Standard

AGENCY: Environmental Protection Agency (EPA).

ACTION: Proposed rule.

SUMMARY: The Environmental Protection Agency (EPA) is proposing to determine that the Las Vegas, Nevada nonattainment area (''Las Vegas'') for the 2015 ozone National Ambient Air Quality Standard (NAAQS) failed to attain by its applicable ''Marginal'' area attainment date of August 3, 2021. The effect of failing to attain by the attainment date is that Las Vegas will be reclassified by operation of law to ''Moderate'' upon the effective date of the final reclassification notice. Consequently, the Nevada Division of Environmental Protection (NDEP) must submit state implementation plan (SIP) revisions required to satisfy the statutory and regulatory requirements for Moderate areas for the 2015 ozone NAAQS. The EPA is proposing deadlines for submission of those SIP revisions and implementation of the related control requirements. This action, if finalized as proposed, will fulfill the EPA's statutory obligation to determine whether the Las Vegas ozone nonattainment area attained the NAAQS by the attainment date.

DATES: Comments must be received on or before August 22, 2022.

ADDRESSES: Submit your comments, identified by Docket ID No. EPA–R09–OAR–2022–0525, at *https://www.regulations.gov.* Follow the online instructions for submitting comments. Once submitted, comments cannot be edited or removed from *regulations.gov.* The EPA may publish any comment received to our public docket. Do not submit electronically any information you consider to be Confidential Business Information (CBI) or other information whose disclosure is restricted by statute. Multimedia submissions (audio, video, etc.) must be accompanied by a written comment. The written comment is considered the official comment and should include discussion of all points you wish to make. The EPA will generally not consider comments or comment contents located outside of the primary submission (*i.e.,* on the Web, Cloud, or other file sharing system). For additional submission methods, please contact the person identified in the **FOR FURTHER INFORMATION CONTACT** section. For the full EPA public comment policy, information about CBI or multimedia submissions, and general guidance on making effective comments, please visit *https://www.epa.gov/dockets/commenting-epa-dockets.* If you need assistance in a language other than English or if you are a person with disabilities who needs a reasonable accommodation at no cost to you, please contact the person identified in the **FOR FURTHER INFORMATION CONTACT** section.

FOR FURTHER INFORMATION CONTACT: Karina O'Connor, Air Planning Office (AIR–2), EPA Region IX, 75 Hawthorne Street, San Francisco, CA 94105; By phone: (775) 434–8176 or by email at *oconnor.karina@epa.gov.*

SUPPLEMENTARY INFORMATION: Throughout this document ''we,'' ''us,'' or ''our'' means the EPA.

Table of Contents

I. Background

A. What is the background for the proposed actions?
B. Overview of Proposal
C. What is the statutory authority for the proposed actions?
D. How does the EPA determine whether an area has attained the 2015 ozone standard?
II. What is the EPA proposing and what is the rationale?
A. Evaluation of Design Value Data and Exceptional Events Documentation
B. Extension of the Marginal Area Attainment Date
C. Determination of Failure To Attain and Reclassification
D. Moderate Area Requirements and Proposed Schedule
1. Required Submission Elements
a) RACM and RACT
b) Vehicle Inspection and Maintenance (I/M)
2. SIP Submission and Implementation Deadline
E. Summary of Proposed Action
III. Statutory and Executive Order Reviews

I. Background

A. What is the background for the proposed actions?

The CAA requires the EPA to establish primary and secondary NAAQS for certain pervasive pollutants that ''may reasonably be anticipated to endanger public health and welfare.'' The primary NAAQS is designed to protect public health with an adequate margin of safety, and the secondary NAAQS is designed to protect public welfare and the environment. The EPA has set NAAQS for six common air pollutants, referred to as criteria pollutants, including ozone. The NAAQS represent the air quality levels an area must meet to comply with the CAA. Ozone is a gas composed of three oxygen atoms and is created by chemical reactions between volatile organic compounds (VOC) and oxides of nitrogen (NO_X) in the atmosphere in the presence of sunlight. Ground-level ozone can harm human health and the environment. Ozone exposure has been associated with increases in susceptibility to respiratory infections, medication use by asthmatics, doctor visits, and emergency department visits and hospital admissions for individuals with respiratory disease. Ozone exposure may also contribute to premature death, especially in people with heart and lung disease.

In October 2015, the EPA strengthened the primary and secondary eight-hour ozone NAAQS from 0.075 parts per million (ppm) to 0.070 ppm (''2015 ozone NAAQS'').[1] In accordance with section 107(d) of the CAA, the EPA must designate an area ''nonattainment'' if it is violating the NAAQS or if it is contributing to a violation of the NAAQS in a nearby area. With respect to the ozone NAAQS, the EPA further classifies nonattainment areas as ''Marginal,'' ''Moderate,'' ''Serious,'' ''Severe,'' or ''Extreme,'' depending upon the ozone design value for an area.[2] As a general matter, higher classified ozone nonattainment areas are subject to a greater number of, and more stringent, CAA planning requirements than lower classified areas but are allowed more time to demonstrate attainment of the ozone NAAQS.[3]

Effective August 3, 2018, the EPA designated and classified the Las Vegas portion of Clark County as a ''Marginal'' nonattainment area for the 2015 ozone NAAQS.[4] The EPA's classification of Las Vegas as a Marginal ozone nonattainment area established a requirement that the area attain the 2015 ozone NAAQS as expeditiously as practicable, but no later than three years from the date of designation as nonattainment, *i.e.,* August 3, 2021.[5]

B. Overview of Proposal

The EPA is required to determine whether areas designated nonattainment for an ozone NAAQS attained the standard by the applicable attainment date, and to take certain steps for areas that failed to attain.[6] For a concentration-based standard, such as the 2015 ozone NAAQS,[7] a determination of attainment is based on a nonattainment area's design value.[8]

The 2015 ozone NAAQS is met at an ambient monitoring site when the design value does not exceed 0.070 parts per million (ppm). For areas classified as Marginal nonattainment for the 2015 ozone NAAQS, the attainment date is August 3, 2021. Because the design value is based on the three most recent, complete calendar years of data, attainment must occur no later than December 31 of the year prior to the attainment date (*i.e.,* December 31, 2020, in the case of Marginal nonattainment areas for the 2015 ozone NAAQS). As such, the EPA's proposed determination is based upon the complete, quality-assured, and certified ozone monitoring data from calendar years 2018, 2019, and 2020.

On November 30, 2020, the Clark County Department of Environment and Sustainability (DES) submitted an initial notification for an intended exceptional event (EE) demonstration, and on July 1, 2021, submitted EE demonstrations for 2 days in 2018 and 6 days in 2020 with exceedances of the standard. On September 2, 2021, the Clark County DES submitted additional EE demonstrations for 13 days in 2018 and for 7 days in 2020. The EPA's actions on these demonstrations affect the determinations of attainment by the attainment date for the Las Vegas area.[9] The EE initial notifications, EE demonstrations, and the EPA's responses to the initial notifications are provided in the docket for this rulemaking.

The data used to calculate both the 2018–2020 design values and the 2020 fourth highest daily maximum 8-hour averages can be found in the docket for this rulemaking.[10] Based on this data and as explained further below, the EPA proposes to determine that Las Vegas did not attain by the attainment date because the area's 2018–2020 design value is greater than 0.070 ppm. Additionally, the area does not qualify for a 1-year extension of the attainment date because the fourth highest daily 8-hour average value in 2020 is greater than 0.070 ppm. If the EPA finalizes the determination that the Las Vegas nonattainment area failed to attain by the Marginal attainment date consistent with CAA section 181(b)(2)(A), the Las Vegas nonattainment area will be reclassified to Moderate by operation of law and will then be subject to the Moderate area requirement to attain the

[1] 80 FR 65291 (October 26, 2015).

[2] See CAA section 181(a)(1). For the 2015 ozone NAAQS, the design value at each monitoring site is the annual fourth-highest daily maximum 8-hour average ozone concentration, averaged over three years. The design value for an area is the highest design value among the monitoring sites in the area.

[3] See, generally, subpart 2 of part D of title I of the CAA.

[4] 83 FR 25776 (June 4, 2018).

[5] See 40 CFR 51.1303(a).

[6] See CAA section 181(b)(2).

[7] Because the 2015 primary and secondary NAAQS for ozone are identical, for convenience, the EPA refers to them in the singular as ''the 2015 ozone NAAQS'' or as ''the standard.''

[8] A design value is a statistic used to compare data collected at an ambient air quality monitoring site to the applicable NAAQS to determine compliance with the standard. The design value for the 2015 ozone NAAQS is the 3-year average of the annual fourth highest daily maximum 8-hour average ozone concentration. The design value is calculated for each air quality monitor in an area and the area's design value is the highest design value among the individual monitoring sites in the area.

[9] CAA section 319(b) defines an exceptional event as an event that (i) affects air quality; (ii) is not reasonably controllable or preventable; (iii) is an event caused by human activity that is unlikely to recur at a particular location or a natural event; and (iv) is determined by the Administrator through the process established in the regulations to be an exceptional event.

[10] United States Environment Protection Agency, Air Quality System, Design Value Report, 2018–2020, Clark County, NV, dated June 7, 2022. Note that design values reported for a given year reflect data from that year and the two previous years, *e.g.,* the design value for 2020 reflects data from 2018–2020.

2015 ozone NAAQS as expeditiously as practicable, but not later than August 3, 2024.

Once reclassified as Moderate, NDEP must submit to the EPA the SIP revisions that satisfy the statutory and regulatory requirements applicable to Moderate areas established in CAA section 182(c) and in the SIP Requirements Rule for the 2015 ozone NAAQS.[11] The EPA proposes to establish deadlines for submitting SIP revisions for this reclassified area, consistent with CAA section 182(i). As discussed in Section II.D. of this notice, the EPA proposes that the SIP revisions will be due on January 1, 2023.

C. What is the statutory authority for the proposed actions?

The statutory authority for the actions proposed in this notice is provided by the CAA, as amended (42 U.S.C. 7401 *et seq.*). Relevant portions of the CAA include, but are not necessarily limited to, CAA sections 181(a)(5) and 181(b)(2).

CAA section 107(d) provides that when the EPA establishes or revises a NAAQS, the agency must designate areas of the country as nonattainment, attainment, or unclassifiable based on whether an area is not meeting (or contributing to air quality in a nearby area that is not meeting) the NAAQS, meeting the NAAQS or cannot be classified as meeting or not meeting the NAAQS, respectively. Subpart 2 of part D of title I of the CAA governs the classification, state planning, and emissions control requirements for any areas designated as nonattainment for a revised primary ozone NAAQS. In particular, CAA section 181(a)(1) requires each area designated as nonattainment for a revised ozone NAAQS to be classified at the same time as the area is designated based on the extent of the ozone problem in the area (as determined based on the area's design value). Classifications for ozone nonattainment areas range from ''Marginal'' to ''Extreme'' based on the severity of the area's air quality problem.

CAA section 182 provides the specific attainment planning and additional requirements that apply to each ozone nonattainment area based on its classification. CAA section 182, as interpreted by the EPA's implementing regulations in the Code of Federal Regulations (CFR) at 40 CFR 51.1308 through 51.1317, also establishes the timeframes by which air agencies must submit and implement SIP revisions to satisfy the applicable attainment planning elements, and the timeframes by which nonattainment areas must attain the 2015 ozone NAAQS. For reclassified areas, CAA section 182(i) provides that the Administrator may adjust applicable deadlines other than attainment dates if such adjustment is necessary or appropriate to assure consistency among the required submissions.

Section 181(b)(2)(A) of the CAA requires that within 6 months following the applicable attainment date, the EPA shall determine whether an ozone nonattainment area attained the ozone standard based on the area's design value as of that date. For nonattainment areas that the EPA determines to have not timely attained, CAA section 181(a)(5) gives the EPA the discretion to grant a 1-year extension of the attainment date for qualifying areas upon application by any state. In the event an area fails to attain the ozone NAAQS by the applicable attainment date and is not granted a 1-year attainment date extension, CAA section 181(b)(2)(A) requires the EPA to make the determination that an ozone nonattainment area failed to attain the ozone standard by the applicable attainment date, and requires the area to be reclassified by operation of law to the higher of: (1) the next higher classification for the area, or (2) the classification applicable to the area's design value as of the determination of failure to attain.[12] Section 181(b)(2)(B) of the CAA requires the EPA to publish the determination of failure to attain and accompanying reclassification in the **Federal Register** no later than 6 months after the attainment date, which in the case of the Las Vegas Marginal nonattainment area, would have been no later than February 3, 2022.

Once an area is reclassified, the state is required to submit certain SIP revisions in accordance with its more stringent classification. The SIP revisions are intended to, among other things, demonstrate how the area will attain the NAAQS as expeditiously as practicable, but no later than August 3, 2024, the Moderate area attainment date for the 2015 ozone NAAQS. According to CAA section 182(i), a state with a reclassified ozone nonattainment area must submit the applicable attainment plan requirements ''according to the schedules prescribed in connection with such requirements'' in CAA section 182(b) for Moderate areas, but the EPA ''may adjust applicable deadlines (other than attainment dates) to the extent such adjustment is necessary or appropriate to assure consistency among the required submissions.''

D. How does the EPA determine whether an area has attained the 2015 ozone standard?

Under the EPA regulations at 40 CFR part 50, Appendix U, the 2015 ozone NAAQS is attained at a site when the 3-year average of the annual fourth highest daily maximum 8-hour average ambient air quality ozone concentration (*i.e.,* design value) does not exceed 0.070 ppm. When the design value does not exceed 0.070 ppm at each ambient air quality monitoring site within the area, the area is deemed to be attaining the ozone NAAQS. The rounding convention in Appendix U dictates that concentrations shall be reported in ''ppm'' to the third decimal place, with additional digits to the right being truncated. Thus, a computed 3-year average ozone concentration of 0.071 ppm is greater than 0.070 ppm and would exceed the standard, but a design value of 0.0709 is truncated to 0.070 and attains the 2015 ozone NAAQS.

The EPA's determination of attainment is based upon data that have been collected and quality-assured in accordance with 40 CFR part 58 and recorded in the EPA's Air Quality System (AQS) database.[13] Ambient air quality monitoring data for the 3-year period preceding the attainment date (*i.e.,* 2018–2020 for the Marginal area attainment date of August 3, 2021) must meet the data completeness requirements in Appendix U.[14] The completeness requirements are met for the 3-year period at a monitoring site if daily maximum 8-hour average concentrations of ozone are available for at least 90 percent of the days within the ozone monitoring season, on average, for the 3-year period, and no single year has less than 75 percent data completeness.

II. What is the EPA proposing and what is the rationale?

The EPA is proposing this action to fulfill its statutory obligation under

[11] See 83 FR 62998, December 6, 2018.

[12] The Las Vegas nonattainment area would be classified to the next highest classification of Moderate. The area does not have a design value that would otherwise place it in a higher classification (*i.e.,* see CAA section 181(b)(2)(A) reference to Extreme areas).

[13] The EPA maintains the AQS, a database that contains ambient air pollution data collected by the EPA, state, local, and tribal air pollution control agencies. The AQS also contains meteorological data, descriptive information about each monitoring station (including its geographic location and its operator) and data quality assurance/quality control information. The AQS data is used to: (1) assess air quality, (2) assist in attainment/non-attainment designations, (3) evaluate SIPs for non-attainment areas, (4) perform modeling for permit review analysis, and (5) prepare reports for Congress as mandated by the CAA. Access is through the website at *https://www.epa.gov/aqs.*

[14] See 40 CFR part 50, Appendix U, section 4(b).

CAA section 181(b)(2) to determine whether Las Vegas attained the 2015 ozone NAAQS as of the attainment date of August 3, 2021.

A. Evaluation of Design Value Data and Exceptional Events Documentation

The EPA evaluated air quality data to determine if the Las Vegas Marginal nonattainment area attained the 2015 ozone NAAQS by the attainment date of August 3, 2021 and, if the area did not attain, to determine if the area is eligible for a 1-year extension of the attainment date. The area's ozone design values for 2018–2020 are shown in Table 1. Based on the certified, complete data from 2018–2020, the design value for the area is 0.074 ppm and the 2020 4th highest daily maximum 8-hour average is 0.078 ppm.

TABLE 1—2015 OZONE DESIGN VALUES AND 2020 4TH HIGHEST DAILY 8-HOUR AVERAGE IN THE LAS VEGAS AREA

Location	AQ site ID	2018–2020 Design value (ppm)	2020 4th Highest daily maximum 8-hour average (ppm)
Paul Meyer	320030043	0.073	0.077
Walter Johnson	320030071	0.073	0.077
Palo Verde	320030073	0.067	0.067
Joe Neal	320030075	0.074	0.078
Green Valley	320030298	0.072	0.071
Jerome Mack-Ncore	320030540	0.069	0.067

On November 30, 2020, the Clark County DES submitted an initial notification for an intended EE demonstration, and on July 1, 2021, submitted EE demonstrations for two days in 2018 and six days in 2020 with exceedances of the standard. On September 2, 2021, the Clark County DES submitted additional EE demonstrations for thirteen days in 2018 and for seven days in 2020. The EPA's actions on these demonstrations affect the determination of attainment by the attainment date for the Las Vegas area.[15] The EE initial notifications, EE demonstrations, and the EPA's responses to the initial notifications are provided in the docket for this rulemaking.

In order for the Las Vegas nonattainment area to have an attaining 2018–2020 design value for the 2015 ozone NAAQS, the EPA would have to concur on most of the EE demonstrations that the Clark County DES submitted for 2018 and 2020. Furthermore, to qualify for an extension of the attainment date, the EPA would have to concur on most of the EE demonstrations submitted for 2020. The EPA responded to Clark County's EE Initial Notification submittal for intended EE demonstrations, dated November 20, 2020, indicating that the events described may affect a future regulatory decision.[16] Because regulatory significance is required for EPA concurrence on an EE demonstration and subsequent exclusion of the event-influenced data from the design value, the EPA therefore determined it would evaluate the demonstrations submitted by Clark County under the Exceptional Events Rule (EER).[17] In an April 26, 2021 letter, the EPA clarified that the demonstrations for seven of the events, listed in Table 2, would be critical and analytically complex. Based on the nature of the events and the anticipated timing of the EPA's determination of whether the Las Vegas nonattainment area attained by the applicable attainment date, the EPA requested these demonstrations be submitted by June 1, 2021.[18] The EPA requested the demonstrations for the remaining demonstrations be submitted by August 1, 2021.[19] The dates for submittals of the demonstrations were revised in a May 4, 2021 letter to be no later than July 1, 2021 and September 3, 2021, respectively.

TABLE 2—SUMMARY OF CRITICAL AND ANALYTICALLY COMPLEX EXCEPTIONAL EVENT DEMONSTRATIONS IN CLARK COUNTY

Event date	Type of event	Monitoring sites affected
June 19–20, 2018	Wildfire	Green Valley, Paul Meyer, Walter Johnson.
May 6, 2020	Stratospheric Ozone Intrusion	Green Valley, Joe Neal, Paul Meyer, Walter Johnson.
May 9, 2020	Stratospheric Ozone Intrusion	Paul Meyer, Walter Johnson.
May 28, 2020	Stratospheric Ozone Intrusion	Paul Meyer, Walter Johnson.
June 22, 2020	Wildfire	Joe Neal, Paul Meyer, Walter Johnson.
June 26, 2020	Wildfire	Paul Meyer.
September 2, 2020	Wildfire	Paul Meyer, Walter Johnson.

The EPA started review of the EE packages by focusing on five of the events: June 19–20, 2018, May 6, 2020, May 9, 2020, June 22, 2020, and June 26, 2020. After reviewing the EE documentation, in a letter dated April 11, 2022, the EPA determined that Clark County DES did not adequately demonstrate that the exceedances for

[15] CAA section 319(b) defines an exceptional event as an event that (i) affects air quality; (ii) is not reasonably controllable or preventable; (iii) is an event caused by human activity that is unlikely to recur at a particular location or a natural event; and (iv) is determined by the Administrator through process established in regulation to be an exceptional event.

[16] Letter from Elizabeth J. Adams, Director, R9 Air and Radiation Division to Michael Sword, Air Planning Manager, Clark County Department of Environment and Sustainability (January 26, 2021).

[17] Id.

[18] Letter from Elizabeth J. Adams, Director, R9 Air and Radiation Division to Marci Henson, Director, Clark County Department of Environment and Sustainability (April 26, 2021).

[19] Id.

these five events satisfy the requirements for exclusion of the data due to an exceptional event as defined under the EER.[20]

The 2007 EER and 2016 EER[21] contain the procedural requirements and the criteria that the EPA uses to evaluate EE demonstrations. The demonstration must satisfy all of the EER criteria for the EPA to concur with excluding the air quality data from regulatory decisions. If any one of the criteria are not met, the EPA will nonconcur with the demonstration. In addition to the procedural requirements, the demonstrations must include: (1) a narrative conceptual model describing the event(s) causing the exceedance or violation and a discussion of how the emissions from the event(s) led to the exceedance or violation, (2) a demonstration of a clear causal relationship between the event and the monitored exceedance or violation, (3) analyses comparing the event-influenced concentration to concentrations at the same monitoring site at other times to support the clear causal relationship, (4) a demonstration that the event was both not reasonably controllable and not reasonably preventable, and (5) a demonstration that the event was a human activity unlikely to recur at a particular location or was a natural event.

The EPA reviewed the Clark County DES EE demonstrations for wildfire events that occurred on June 19–20, 2018, June 22, 2020 and June 26, 2020. For all three events the EPA nonconcurred based on the conclusion that the events do not meet the requirements in the EER because the demonstrations have not sufficiently shown a clear causal relationship between the specific events and the monitored exceedances. These conclusions were based on review of the evidence presented in the demonstrations, including meteorological information, fire emission information, trajectory analysis, smoke modeling data, ground level monitoring data, and statistical modeling analysis. More information about the EPA's analysis on these EE demonstrations for wildfire events can be found in the docket for this action.[22]

The EPA also reviewed the Clark County DES demonstrations for stratospheric ozone intrusion (SOI) events that occurred on May 6, 2020, and May 9, 2020. The EPA nonconcurred on these events based on the conclusion that the information presented in the demonstrations did not sufficiently show a clear causal relationship between the specific events and the monitored exceedances of the 2015 ozone NAAQS in the Las Vegas nonattainment area. These conclusions were based on review of the evidence presented in the demonstrations including satellite imagery and atmospheric models, trajectory analysis, skew-T diagrams, vertical ozone profiles, meteorological information, ground level monitoring data, matching day analysis, and statistical modeling analysis. The information presented in the SOI event submittals supported that SOI events had occurred, but the weight of evidence did not support the finding that ozone-rich stratospheric air was transported to the surface in the Las Vegas nonattainment area and caused the exceedances of the 2015 ozone NAAQS measured at the Las Vegas area monitors. More information about the EPA's analysis of these EE demonstrations for SOI events can be found in the docket for this action.[23]

Based on the EPA's nonconcurrence on five exceptional event demonstrations, the 2018–2020 design value for the Las Vegas area remains above the 2015 ozone standard, at 0.074 ppm. In the 2016 revisions to the EER, ''regulatory significance'' was clarified to mean that the demonstrations affect the outcome of a regulatory action.[24] Even if the EPA concurred on the additional EE demonstrations submitted by the Clark County DES, the design value would still be above the standard; therefore, the remaining exceptional events no longer have regulatory significance for determining that the area attained by the Marginal area attainment date.

B. Extension of Marginal Area Attainment Date

In a letter dated September 9, 2021, the Clark County DES requested an extension of the Las Vegas area Marginal area attainment date; the letter is provided in the docket for this rulemaking.[25] Section 181(a)(5) of the CAA provides the EPA discretion to extend an area's applicable attainment date by one additional year upon application by any state if the state meets the two criteria under CAA section 181(a)(5) as interpreted by the EPA in 40 CFR 51.1307. The two criteria are that (1) the state has complied with all requirements and commitments pertaining to the area in the applicable implementation plan; and (2) for a first attainment date extension, an area's fourth highest daily maximum 8-hour value for the attainment year must not exceed the level of the standard.[26] Based on the EPA's nonconcurrence on four exceptional event demonstrations for exceedances that occurred in 2020, the 2020 4th highest daily maximum 8-hour average remains above 0.070 ppm, at 0.078 ppm; therefore the area is not be eligible for a one-year extension. In the 2016 revisions to the EER, ''regulatory significance'' was clarified to mean that the demonstrations affect the outcome of a regulatory action.[27] Even if the EPA concurred on additional EE demonstrations, the 2020 4th highest daily maximum 8-hour average would still be above 0.070 ppm, therefore, the remaining exceptional events no longer have regulatory significance.

[20] Letter from Elizabeth J. Adams, Director, R9 Air and Radiation Division to Marci Henson, Director, Clark County Department of Environment and Sustainability, re: EPA Review of Clark County Department of Environment and Sustainability Exceptional Event Demonstrations for the 2015 Ozone NAAQS Las Vegas Nevada Nonattainment Area (Apr. 11, 2022).

[21] The EPA promulgated the EER in 2007, pursuant to the 2005 amendment of CAA section 319. In 2016, the EPA finalized revisions to the EER, which superseded the 2007 EER. The 2007 EER and 2016 EER revisions added sections 40 CFR 50.1(j)–(r); 50.14; and 51.930 to title 40 of the CFR.

[22] Letter from Elizabeth J. Adams, Director, R9 Air and Radiation Division to Marci Henson, Director, Clark County Department of Environment and Sustainability, re: EPA Review of Clark County Department of Environment and Sustainability Exceptional Event Demonstrations for the 2015 Ozone NAAQS Las Vegas Nevada Nonattainment Area (April 11, 2022), Enclosures: Technical Support Document for EPA Nonconcurrence on O_3 Exceedances Measured in Clark County, Nevada on June 19, 2018, as a Wildfire Exceptional Event; Technical Support Document for EPA Nonconcurrence on O_3 Exceedances Measured in Clark County, Nevada on June 22, 2020, as a Wildfire Exceptional Event; Technical Support Document for EPA Nonconcurrence on O_3 Exceedances Measured in Clark County, Nevada on June 26, 2020, as a Wildfire Exceptional Event.

[23] Letter from Elizabeth J. Adams, Director, R9 Air and Radiation Division to Marci Henson, Director, Clark County Department of Environment and Sustainability, re: EPA Review of Clark County Department of Environment and Sustainability Exceptional Event Demonstrations for the 2015 Ozone NAAQS Las Vegas Nevada Nonattainment Area (April 11, 2022), Enclosures: Technical Support Document for EPA Nonconcurrence on O3 Exceedances Measured in Clark County, Nevada on May 6, 2020, as a Stratospheric O_3 Intrusion Exceptional Event; Technical Support Document for EPA Nonconcurrence on O_3 Exceedances Measured in Clark County, Nevada on May 9, 2020, as a Stratospheric O_3 Intrusion Exceptional Event.

[24] 81 FR 68269 (October 3, 2016).

[25] Marci Henson, Director, Clark County DES, ''Request for a Determination of Attainment or One-year Extension of the 2015 Ozone NAAQS for the Las Vegas Valley Nonattainment Area.'' To Greg Lovato, Administatrator, Nevada Division of Environmental Protection, September 9, 2021.

[26] The attainment year is the calendar year corresponding with the final ozone season for determining attainment; ''attainment year ozone season'' is defined as the ozone season immediately preceding a nonattainment area's maximum attainment date (*see* 40 CFR 51.1300(g)).

[27] 81 FR 68269 (October 3, 2016).

C. Determination of Failure To Attain and Reclassification

The EPA proposes to determine that the Las Vegas nonattainment area did not attain the 2015 ozone NAAQS by the August 3, 2021, attainment date and does not qualify for a 1-year attainment date extension because the area does not meet the two extension criteria under CAA section 181(a)(5) as interpreted by the EPA in 40 CFR 51.1307. As discussed previously, the area has a 2018–2020 design value greater than 0.070 ppm.

If we finalize our action as proposed, the Las Vegas nonattainment area will be reclassified to Moderate, the next higher classification, as provided under CAA section 181(b)(2)(A)(i) and codified at 40 CFR 51.1303. The area is required to attain the standard ''as expeditiously as practicable'' but no later than 6 years after the initial designation as nonattainment, which in this case would be no later than August 3, 2024. After reclassification to Moderate, if the area attains the 2015 ozone NAAQS prior to the Moderate area attainment date, the state of Nevada may seek a Clean Data Determination, in which certain attainment planning SIPs would be suspended under 40 CFR 51.1318 or a redesignation to attainment.[28]

D. Moderate Area Requirements and Proposed Schedule

Marginal nonattainment areas that failed to attain the 2015 ozone NAAQS by the attainment date will be reclassified as Moderate by operation of law upon the effective date of the final reclassification notice. Each responsible state air agency must submit SIP revisions that satisfy the general air quality planning requirements under CAA section 172(c) and specific requirements for Moderate areas under CAA section 182(b), as interpreted and described in the final SIP Requirements Rule for the 2015 ozone NAAQS.[29] This section describes the required Moderate area submission elements, provides additional discussion of the vehicle inspection and maintenance program requirement, and proposes a submission and implementation deadline for Moderate area SIP revisions.

1. Required Submission Elements

For each new Moderate ozone nonattainment area, the SIP revision requirements include: (1) an attainment demonstration (CAA section 182(b) and 40 CFR 51.1308); (2) provisions for reasonably available control measures (RACM) (CAA section 172(c)(1) and 40 CFR 51.1312(c)) and reasonable available control technology (RACT) (CAA section 182(b)(2) and 40 CFR 51.1312(a)–(b)); (3) reasonable further progress (RFP) reductions in volatile organic compounds (VOC) and/or nitrogen oxide (NO_X) emissions in the area (CAA sections 172(c)(2) and 182(b)(1) and 40 CFR 51.1310); (4) contingency measures to be implemented in the event of failure to meet a milestone or to attain the standard (CAA section 172(c)(9)); (5) NO_X and VOC emission offsets at a ratio of 1.15 to 1 for major source permits (CAA section 182(b)(5) and 40 CFR 51.165(a)); and, (6) a vehicle inspection and maintenance program, if applicable, which is discussed in the following section of this notice (CAA section 181(b)(4) and 40 CFR 51.350).[30] We are providing additional discussion in the following sections for these Moderate area requirements: (a) RACM and RACT; and (b) vehicle inspection and maintenance.

a. RACM and RACT

States must provide an analysis of—and adopt all—RACM, including RACT needed for purposes of meeting RFP or timely attainment of the ozone NAAQS. The EPA interprets the RACM provision at CAA section 172(c) to require a demonstration that the state has adopted all reasonable measures (including RACT) to meet RFP requirements and to demonstrate attainment as expeditiously as practicable and thus that no additional measures that are reasonably available will advance the attainment date or contribute to RFP for the area.[31] For areas reclassified as Moderate, such an analysis should include an evaluation of RACT controls for sources emitting 100 tons per year or more that are currently reasonably available.

The EPA has long taken the position that the statutory requirement for states to assess and adopt RACT for sources in ozone nonattainment areas classified Moderate and higher generally exists independently from the attainment planning requirements for such areas.[32] In addition to the independent RACT requirement, states have a statutory obligation to apply RACM (including such reductions in emissions from existing sources in the area as may be obtained through implementation of RACT) to meet RFP requirements and to demonstrate attainment as expeditiously as practicable. Therefore, to the extent that a state adopts new or additional RACT controls to meet RFP requirements or to demonstrate attainment as expeditiously as practicable, those states must include such RACT revisions with the other SIP elements due as part of the attainment plan required under CAA sections 172(c) and 182(b).

b. Vehicle Inspection and Maintenance (I/M)

A Basic I/M program is required for all urbanized Moderate areas under the 2015 ozone NAAQS. The Las Vegas nonattainment area is currently operating I/M programs as part of the maintenance plan for the 1971 carbon monoxide standard for which the area had been classified as Serious nonattainment and subsequently redesignated. If we finalize our action as proposed, the Clark County DES and NDEP would need to conduct and submit a performance standard modeling analysis as well as make any necessary program revisions as part of their Moderate area SIP submissions to ensure that the I/M program is operating at or above the Basic I/M performance standard level for the 2015 ozone NAAQS. The Clark County DES and NDEP may determine through the performance standard modeling analysis that the existing SIP-approved program would meet the performance standard for purposes of the 2015 ozone NAAQS without modification. In this case, the Clark County DES and NDEP could submit a SIP revision with the associated performance modeling and a written statement certifying their determination in lieu of submitting new revised regulations. The applicable requirements for Moderate ozone nonattainment areas that are required to

[28] The EPA's Clean Data Policy, as codified for the 2015 ozone NAAQS at 40 CFR 51.1318, suspends the requirements for states to submit certain attainment planning SIPs such as the attainment demonstrations, reasonably available control measures (RACM), reasonable further progress (RFP), and contingency measures for so long as an area continues to attain the standard.

[29] See 40 CFR 51.1300 *et seq.*

[30] See also the requirements for Moderate ozone nonattainment areas set forth in CAA section 182(b) and the general nonattainment plan provisions required under CAA section 172(c).

[31] See 80 FR 12264, 12282, March 6, 2015; and 40 CFR 1112(c).

[32] See Memo from John Seitz, ''Reasonable Further Progress, Attainment Demonstration, and Related Requirements for Ozone Nonattainment Areas Meeting the Ozone National Ambient Air Quality Standard'' (1995), at 5 (explaining that Subpart 2 requirements linked to the attainment demonstration are suspended by a finding that a nonattainment area is attaining but that requirements such as RACT must be met whether or not an area has attained the standard); see also 40 CFR 51.1318 (suspending attainment demonstrations, RACM, RFP, contingency measures, and other attainment planning SIPs with a finding of attainment).

adopt a Basic I/M program are described in sections 182(a)(2)(B), and 182(b)(4), of the CAA and further defined in the EPA's I/M rule (40 CFR part 51, subpart S). The performance standard [33] of a model Basic I/M program is established in the CAA and further detailed in the I/M rule.[34] A more detailed description of the requirements for the SIP submittal demonstrating that the current I/M program meets the CAA requirements was included in the EPA's April 13, 2022 proposed rule for other 2015 ozone nonattainment areas under consideration for reclassification to Moderate.[35] The I/M SIP submissions are due at the same time as the other Moderate area submission elements.[36]

2. SIP Submission and Implementation Deadline

On August 3, 2018, when final nonattainment designations became effective for the 2015 ozone NAAQS, states responsible for areas initially classified as Moderate were required to prepare and submit SIP revisions by deadlines relative to that effective date. For those areas, the submission deadlines ranged from 2 to 3 years after the effective date of designation, depending on the SIP element required (*e.g.,* 2 years for the RACT SIP, and 3 years for the attainment plan with RACM and attainment demonstration). Initial Moderate areas were also required to implement RACT as expeditiously as practicable but no later than January 1 of the 5th year after the effective date of designations, *i.e.,* January 1, 2023. However, the SIP submission deadlines for initial Moderate areas have passed and the EPA is proposing to use its discretion under CAA section 182(i) to adjust the SIP deadlines that would otherwise apply.[37] The EPA recently proposed similar adjustments in SIP revision and RACT implementation deadlines for other reclassified Moderate areas in an April 13, 2022 rulemaking.[38]

The EPA is proposing that the state of Nevada submit SIP revisions addressing all Moderate area requirements no later than January 1 of the 5th year after the effective date of designations, *i.e.,* January 1, 2023. The ''schedule prescribed in connection with'' the attainment planning requirements for Moderate areas is 3 years from designation.[39] However, given that the Las Vegas nonattainment area is being reclassified rather than newly designated as a Moderate areas, the EPA is proposing that aligning the Las Vegas nonattainment area's deadline with the deadlines proposed for other reclassified areas is appropriate and necessary for ''consistency among the submissions'' of all reclassified Moderate areas across the country.

The EPA's implementing regulations for the 2015 ozone NAAQS do not address SIP submission deadlines for reclassified areas, except for RACT SIPs. Specifically, 40 CFR 1312(a)(ii) establishes a RACT SIP submission deadline for areas classified Moderate or higher of either 24 months from the reclassification effective date or a deadline established by the Administrator in the reclassification action. In the case of the potential newly reclassified Moderate area addressed in this proposal, a RACT SIP submission deadline of 24 months after an anticipated 2023 effective date would fall in 2025. Because a 2025 deadline would exceed the applicable Moderate area maximum attainment date of August 3, 2024, we rejected a 24-month submission deadline and are instead proposing to use the Administrator's discretion under CAA section 182(i) to establish a January 1, 2023, SIP submission deadline that would apply for RACT (per 40 CFR 1312(a)(ii)) and all other required Moderate area SIP submissions. Our objective is to establish a single deadline that would not extend beyond our proposed deadline for implementing RACT and to provide for consistency among the required SIP submissions. The EPA adopted this approach previously for Marginal areas reclassified to Moderate for failure to timely attain the 2008 ozone NAAQS.[40]

As mentioned previously, we are proposing that the state must provide for implementation of all RACT needed for purposes of meeting RFP or timely attaining the ozone NAAQS as expeditiously as practicable but no later than January 1, 2023. The EPA's implementing regulations for the 2015 ozone NAAQS require that the state shall provide for implementation of such RACT as expeditiously as practicable, but no later than the start of the attainment year ozone season associated with the area's new attainment deadline, or January 1 of the third year after the associated SIP submission deadline, whichever is earlier; or the deadline established by the Administrator in the final action issuing the area reclassification.[41]

Because January 1 of the third year after the proposed January 1, 2023 SIP submission deadline would fall on January 1, 2026, this date would exceed the applicable Moderate area maximum attainment date of August 3, 2024. The EPA's implementing regulations for the 2015 ozone NAAQS require that, for areas initially classified as Moderate or higher, a state shall provide for implementation of RACT as expeditiously as practicable but no later than January 1 of the 5th year after the effective date of designation, which corresponds with the beginning of the attainment year for initial Moderate areas (January 1, 2023).[42] The modeling and attainment demonstration requirements for 2015 ozone NAAQS areas classified Moderate or higher require that a state must provide for implementation of all control measures needed for attainment no later than the beginning of the attainment year ozone season, notwithstanding any alternative deadline established per 40 CFR 1312.[43] These regulations allow a comparable amount of time for sources to meet RACT requirements as originally anticipated under the 1990 CAA Amendments, with the objective that RACT measures be in place to influence an area's attainment year air quality and design value.[44]

The start of the ozone season varies among states and is either January or March for potential reclassified Moderate areas addressed in the April

[33] An I/M performance standard is a collection of program design elements which defines a benchmark program to which a state's proposed program is compared in terms of its potential to reduce emissions of the ozone precursors, VOC and NO_X. The EPA intends to provide appropriate guidance for Basic I/M programs under the 2015 ozone NAAQS separate from this rulemaking.

[34] See 40 CFR 51.352(e)). The EPA is not proposing changes to its I/M regulations in this notice; however, additional clarification in this preamble is provided to assist the state in understanding specific I/M program requirements due to being reclassified as Moderate.

[35] 87 FR 21842.

[36] 40 CFR 51.372(b)(2) states—''A SIP revision required as a result of a change in an area's designation or classification under a NAAQS for ozone, including all necessary legal authority and the items specified in paragraphs (a)(1) through (8) of this section, shall be submitted no later than the deadline for submitting the area's attainment SIP for the NAAQS in question.''

[37] CAA section 182(i) provides that areas reclassified under CAA section 181(b)(2) shall generally meet the requirements associated with their new classifications ''according to the schedules prescribed in connection with such requirements, except that the Administrator may adjust any applicable deadlines (other than attainment dates) to the extent such adjustment is necessary or appropriate to assure consistency among the required submissions.''

[38] 87 FR 21842.

[39] See CAA section 182(i).

[40] ''Final Rule—Determinations of Attainment by the Attainment Date, Extensions of the Attainment Date, and Reclassification of Several Areas for the 2008 Ozone National Ambient Air Quality Standards'' (81 FR 26697, 26705, May 4, 2016).

[41] See 40 CFR 1312(a)(3)(ii).

[42] See 40 CFR 51.1312(a)(3)(i).

[43] See 40 CFR 51.1308(d).

[44] See CAA section 182(b)(2).

13, 2022 national proposal.[45] For this reason, the EPA rejected an approach that would establish variable RACT implementation deadlines corresponding to an area's defined ozone season starting month and proposed a single RACT implementation deadline for all newly reclassified Moderate areas corresponding with the beginning of the applicable attainment year, *i.e.,* January 1, 2023. Because the start of the ozone season for the Las Vegas ozone nonattainment area is January,[46] the January 2023 deadline is consistent with the beginning of the applicable attainment year for the area, is the same as the single RACT implementation deadline for all initial Moderate areas per 40 CFR 51.1312(a)(3) and would require implementation of any identified RACT as early as possible in the attainment year to influence an area's air quality and 2021–2023 attainment design value. Aligning the SIP submission and RACT implementation deadline would also ensure that SIPs requiring control measures needed for attainment, including RACM, would be submitted no later than when those controls are required to be implemented. Our proposed deadline for the Las Vegas Moderate area SIP submissions and RACT implementation would also treat states consistently, in keeping with CAA section 182(i).

The EPA requests comment on our proposal to align the SIP submission deadline and RACT implementation deadline for the Las Vegas nonattainment area, if reclassified to Moderate, and requiring that any RACT needed for meeting RFP or timely attainment of the 2015 ozone NAAQS be implemented as expeditiously as practicable but no later than the beginning of the applicable attainment year, *i.e.,* January 1, 2023.

With respect to the implementation deadline for any revisions to the current I/M program that may be necessary, if Clark County DES and NDEP wish to use emissions reductions from their revised I/M program for the 2015 ozone NAAQS, they would need to have such revisions fully established and start testing as expeditiously as practicable but no later than the beginning of the applicable attainment year, *i.e.,* January 1, 2023. However, we also request comment on two alternative implementation deadlines for the I/M program revisions (whose emission reductions are not intended to be relied upon for attainment or RFP) that are consistent with the EPA's proposed action for other areas, for new and revised Basic I/M programs: the first to allow newly required I/M programs to be fully implemented no later than 4 years after the effective date of reclassification; and the second to align the I/M implementation deadline with the attainment date for Moderate areas under the 2015 ozone NAAQS. A more detailed description of these I/M implementation date options for certain situations can be found in the EPA's April 13, 2022, proposed rule for other 2015 ozone nonattainment areas under consideration for reclassification to Moderate.[47]

E. Summary of Proposed Action

The EPA is proposing to determine that the Las Vegas nonattainment area failed to attain the 2015 ozone standard by its Marginal area attainment date of August 3, 2021, based on a 2018–2020 design value of 0.074 ppm. The EPA is also proposing to determine that the Las Vegas nonattainment area is not eligible for a one-year extension of the Marginal area attainment date because the area's 2020 4th highest daily maximum 8-hour average is 0.078 ppm. CAA section 181(b)(2) requires areas that have failed to attain by their attainment date be reclassified to the higher of (i) the next highest classification, or (ii) the classification that corresponds with the area's design value as of the time that the EPA publishes the document identifying the areas that have failed to attain by their attainment date. Accordingly, the EPA is proposing that the Las Vegas Marginal nonattainment area failed to attain the 2015 ozone NAAQS by August 3, 2021, and therefore the area must be reclassified as Moderate. The EPA is further proposing that the state of Nevada must submit SIP revisions to fulfill the CAA's Moderate area requirements by January 1, 2023. The EPA is taking comment for 30 days on the determination of failure to attain and subsequent reclassification from Marginal to Moderate.

III. Statutory and Executive Order Reviews

Additional information about these statutes and Executive Orders can be found at *https://www2.epa.gov/laws-regulations/laws-and-executive-orders.*

A. Executive Order 12866, Regulatory Planning and Review and Executive Order 13563: Improving Regulation and Regulatory Review

This proposed action is not a significant regulatory action and was therefore not submitted to the Office of Management and Budget (OMB) for review.

B. Paperwork Reduction Act

This rule does not impose any new information collection burden under the PRA not already approved by the OMB.

C. Regulatory Flexibility Act

I certify that this action will not have a significant economic impact on a substantial number of small entities under the RFA. This action will not impose any requirements on small entities.

D. Unfunded Mandates Reform Act

This action does not contain any unfunded mandate as described in UMRA, 2 U.S.C. 1531–1538, and does not significantly or uniquely affect small governments. This action imposes no enforceable duty on any state, local or tribal governments, or the private sector.

E. Executive Order 13132, Federalism

This action does not have federalism implications. It will not have substantial direct effects on the states, tribes, or the relationship between the national government and the states and tribes, or on the distribution of power and responsibilities among the various levels of government.

F. Executive Order 13175, Coordination With Indian Tribal Governments

Executive Order 13175, entitled ''Consultation and Coordination with Indian Tribal Governments'' (65 FR 67249, November 9, 2000), requires the EPA to develop an accountable process to ensure ''meaningful and timely input by tribal officials in the development of regulatory policies that have tribal implications.'' ''Policies that have tribal implications'' is defined in the Executive Order to include regulations that have ''substantial direct effects on one or more Indian tribes, on the relationship between the Federal government and the Indian tribes, or on the distribution of power and responsibilities between the Federal government and Indian Tribes.''

The Las Vegas Tribe of Paiute Indians of the Las Vegas Indian Colony have areas of Indian country located within the Las Vegas Valley nonattainment area for the 2015 ozone NAAQS. The EPA has concluded that the proposed rule may have tribal implications for this

[45] 87 FR 21842. See also 40 CFR part 58, appendix D, section 4.1, Table D–3).

[46] Id., at Table D–3.

[47] See 87 FR 21856.

tribe for the purposes of Executive Order 13175, but would not impose substantial direct costs upon the tribes, nor would it preempt tribal law. A tribe that is part of a Marginal nonattainment area that is reclassified Moderate is not required to submit a TIP revision to address new Moderate area requirements. However, if the EPA finalizes the determination of failure to attain proposed in this action, the nonattainment new source review major source threshold and offset requirements would change for stationary sources seeking preconstruction permits in any nonattainment areas newly reclassified as Moderate, including on tribal lands within these nonattainment areas.

In a letter dated July 16, 2021, the EPA invited the Las Vegas Tribe of Paiute Indians of the Las Vegas Indian Colony to consult on our evaluation and determination of whether the Las Vegas nonattainment area attained or failed to attain by its Marginal area attainment date. The EPA intends to notify the Las Vegas Tribe of Paiute Indians of the Las Vegas Indian Colony of this proposed action and we will initiate government-to-government consultation if requested.

G. Executive Order 13045, Protection of Children From Environmental Health Risks and Safety Risks

The EPA interprets Executive Order 13045 as applying only to those regulatory actions that concern environmental health or safety risks that the EPA has reason to believe may disproportionately affect children, per the definition of ''covered regulatory action'' in section 2–202 of the Executive Order. This action is not subject to Executive Order 13045 because it does not concern an environmental health risk or safety risk.

H. Executive Order 13211, Actions That Significantly Affect Energy Supply, Distribution, or Use

This proposed action is not subject to Executive Order 13211 (66 FR 28355, May 22, 2001) because it is not a significant regulatory action under Executive Order 12866.

I. National Technology Transfer and Advancement Act

This rulemaking does not involve technical standards.

J. Executive Order 12898: Federal Actions To Address Environmental Justice in Minority Populations and Low-Income Population

Executive Order (E.O.) 12898 (59 FR 7629 (Feb. 16, 1994)) establishes federal executive policy on environmental justice. Its main provision directs federal agencies, to the greatest extent practicable and permitted by law, to make environmental justice part of their mission by identifying and addressing, as appropriate, disproportionately high and adverse human health or environmental effects of their programs, policies, and activities on minority populations and low-income populations in the United States. Upon review, the EPA did not identify any particular facts or circumstances that would indicate this action will have potential disproportionately high and adverse human health or environmental effects on minority, low-income, or indigenous populations.

Furthermore, with respect to the determinations of whether areas have attained the NAAQS by the attainment date, the EPA has no discretionary authority to address environmental justice in these determinations. The CAA directs that within 6 months following the applicable attainment date, the Administrator shall determine, based on the area's design value as of the attainment date, whether the area attained the standard by that date. CAA section 181(b)(2)(A). Except for any Severe or Extreme area, any area that the Administrator finds has not attained the standard by that date shall be reclassified by operation of law to either the next higher classification or the classification applicable to the area's design value.

List of Subjects

40 CFR Part 52

Environmental protection, Administrative practice and procedure, Air pollution control, Designations and classifications, Incorporation by reference, Intergovernmental relations, Nitrogen oxides, Ozone, Reporting and recordkeeping requirements and Volatile organic compounds.

40 CFR Part 81

Environmental protection, Administrative practice and procedure, Air pollution control, Designations and classifications, Intergovernmental relations, Nitrogen oxides, Ozone, Reporting and recordkeeping requirements, and Volatile organic compounds.

Dated: July 16, 2022.

Martha Guzman Aceves,

Regional Administrator, Region IX.

[FR Doc. 2022–15674 Filed 7–21–22; 8:45 am]

BILLING CODE 6560–50–P

ENVIRONMENTAL PROTECTION AGENCY

40 CFR Part 372

[EPA–HQ–OPPT–2022–0387; FRL–9529–01–OCSPP]

RIN 2070–AL09

Community Right-To-Know; Adopting 2022 North American Industry Classification System (NAICS) Codes for Toxics Release Inventory (TRI) Reporting

AGENCY: Environmental Protection Agency (EPA).

ACTION: Proposed rule.

SUMMARY: EPA is proposing to update the list of North American Industry Classification System (NAICS) codes subject to reporting under the Toxics Release Inventory (TRI) to reflect the Office of Management and Budget (OMB) 2022 NAICS code revision. OMB updates the NAICS codes every five years. EPA currently uses 2017 NAICS codes and is proposing to implement the 2022 codes for TRI Reporting Year 2022 (*i.e.,* facilities reporting to TRI would be required to use 2022 NAICS codes on reports that are due to the Agency by July 1, 2023). The actual data required by a TRI form will not change as a result of this rulemaking, nor will the rule affect the universe of TRI reporting facilities that are required to submit reports to the Agency under the Emergency Planning and Community Right-to-Know Act (EPCRA).

DATES: Comments must be received on or before September 20, 2022.

ADDRESSES: Submit your comments, identified by docket identification (ID) number EPA–HQ–OPPT–2022–0387, through the Federal eRulemaking Portal at *https://www.regulations.gov.* Follow the online instructions for submitting comments. Do not submit electronically any information you consider to be Confidential Business Information (CBI) or other information whose disclosure is restricted by statute. Additional instructions on commenting or visiting the docket, along with more information about dockets generally, is available at *https://www.epa.gov/dockets.*

FOR FURTHER INFORMATION CONTACT:

For technical information contact: Rachel Dean, Data Collection Branch, Data Gathering and Analysis Division (Mailcode: 7406M), Office of Pollution Prevention and Toxics, Environmental Protection Agency, 1200 Pennsylvania Ave. NW, Washington, DC 20460; telephone number: (202) 566–1303; email address: *dean.rachel@epa.gov.*

For general information contact: The Emergency Planning and Community Right-to-Know Information Center; telephone number: (800) 424–9346 or (703) 348–5070 in the Washington, DC Area and International; website: *https://www.epa.gov/aboutepa/epa-hotlines.*

SUPPLEMENTARY INFORMATION:

I. Executive Summary

A. Does this action apply to me?

You may be potentially affected by this action if you own or operate facilities that have 10 or more full-time employees or the equivalent of 20,000 employee hours per year that manufacture, process, or otherwise use toxic chemicals listed on the TRI, and that are required under section 313 of EPCRA or section 6607 of the Pollution Prevention Act (PPA) to report annually to EPA and States or Tribes their environmental releases or other waste management quantities of covered chemicals. (A rule was published on April 19, 2012 (77 FR 23409; FRL–9660–9), requiring facilities located in Indian country to report to the appropriate tribal government official and EPA instead of to the state and EPA.)

The following list of 2017 North American Industrial Classification System (NAICS) codes is not intended to be exhaustive, but rather provides a guide to help readers determine whether this document applies to them. Potentially affected entities may include:

- Facilities included in the following NAICS manufacturing codes (corresponding to Standard Industrial Classification (SIC) codes 20 through 39): 311*, 312*, 313*, 314*, 315*, 316, 321, 322, 323*, 324, 325*, 326*, 327, 331, 332, 333, 334*, 335*, 336, 337*, 339*, 111998*, 113310, 211130* (corresponds to SIC 2819), 212324*, 212325*, 212393*, 212399*, 488390*, 511110, 511120, 511130, 511140*, 511191, 511199, 512230*, 512250*, 519130*, 541713*, 541715*, or 811490*.

(*Exceptions and/or limitations exist for these NAICS codes.)

- Facilities included in the following NAICS manufacturing codes (corresponding to SIC codes other than 20–39): 211130 (corresponds to SIC code 1321); or 212111, 212112, 212113, (corresponds to SIC code 12, Coal Mining (except 1241)); 212221, 212222, 212230, 212299 (corresponds to SIC code 10, Metal Mining (except 1011, 1081, and 1094)); or 22111*, 221121, 221122, 221330 (limited to facilities that combust coal and/or oil for the purpose of generating power distribution in commerce) (corresponds to SIC codes 4911, 4931, and 4939, Electric Utilities); or 424690, 425110, 425120 (limited to facilities previously classified in SIC code 5169, Chemicals and Allied Products, Not Elsewhere Classified); or 424710 (corresponds to SIC code 5171, Petroleum Bulk Terminals and Plants); or 562112 (limited to facilities primarily engaged in solvent recovery services on a contract or fee basis (previously classified under SIC code 7389, Business Services, Not Elsewhere Classified)); or 562211, 562212, 562213, 562219, 562920 (limited to facilities regulated under the Resource Conservation and Recovery Act, subtitle C, 42 U.S.C. 6921 *et seq.*) (corresponds to SIC code 4953, Refuse Systems).

(*Exceptions and/or limitations exist for these NAICS codes.)

- Federal facilities.

If you have any questions regarding the applicability of this action to a particular entity, consult the technical person listed in the **FOR FURTHER INFORMATION CONTACT** section.

B. What is the Agency's authority for taking this action?

EPA is taking this action under EPCRA sections 313(g)(1) and 328, 42 U.S.C. 11023(g)(1) and 11048. In general, EPCRA section 313 requires owners and operators of covered facilities in specified SIC codes that manufacture, process, or otherwise use listed toxic chemicals in amounts above specified threshold levels to report certain facility specific information about such chemicals, including the annual releases and other waste management quantities. EPCRA section 313(g)(1) requires EPA to publish a uniform toxic chemical release form for these reporting purposes, and it also prescribes, in general terms, the types of information that must be submitted on the form. Congress also granted EPA broad rulemaking authority to allow the Agency to fully implement the statute. EPCRA section 328 authorizes EPA to ''prescribe such regulations as may be necessary to carry out this chapter.'' 42 U.S.C. 11048.

C. Why is EPA taking this action?

In the **Federal Register** of April 9, 1997 (62 FR 17288), OMB published a final decision to adopt the NAICS economic classification system, replacing the Standard Industry Classification (SIC) system which had traditionally been used by the Federal Government for collecting and organizing industry-related statistics. Consistent with EPCRA section 313 and PPA section 6607, on June 6, 2006, EPA amended 40 CFR part 372 to change TRI reporting from requiring SIC codes to requiring NAICS codes (71 FR 32464; FRL–8180–2) (Ref. 1). This amendment to the regulation included the 2002 NAICS codes for TRI reporting. OMB revises the NAICS codes every five years. Therefore, EPA subsequently updated the NAICS codes in:

- June 9, 2008 (73 FR 32466; FRL–8577–1) to include the 2007 codes,
- July 18, 2013 (78 FR 42875; FRL–9825–8) (Ref. 2) to include the 2012 NAICS codes,
- December 26, 2017 (82 FR 60906; FRL–9970–02) to include the 2017 NAICS codes.

In the **Federal Register** of December 21, 2021, OMB announced updated NAICS codes for 2022 (86 FR 72277). In this document EPA is proposing to amend 40 CFR part 372 to reflect OMB's updated 2022 NAICS codes.

NAICS codes are used by EPA's TRI program, which provides the ability to track releases and other waste management (among other information) of chemicals by a sector and/or facility basis. This detailed information is made public so that community members, industrial facilities, research organizations, and federal government can make informed decisions that impact human health and the environment. Also, comparative analysis by sector or facility can demonstrate the volume of a specific chemical released to air, water, and land. In addition, NAICS codes help provide a snapshot of pollution prevention efforts at each facility by demonstrating results of toxic emissions reductions across industry sectors.

D. What action is the Agency taking?

Given OMB's revisions to the NAICS codes that became effective January 1, 2022, EPA is proposing to amend 40 CFR part 372 to update the 2022 NAICS codes for TRI reporting. In addition, EPA is proposing to include NAICS codes in 40 CFR part 372 for facilities that are covered under TRI's SIC codes but had been inadvertently excluded in past TRI NAICS rulemakings. EPA is also proposing to update the CFR to account for the discretionary authority provision provided in EPCRA section 313(b)(2) (42 U.S.C. 11023(b)(2)).

1. NAICS Codes Updated To Conform With the 2022 NAICS Code Modifications

Under this action, TRI reporting requirements would remain unchanged. However, due to the 2022 NAICS code modifications, some facilities will need to modify their reported NAICS codes as outlined in Table 1 in Unit I.D., which identifies only the revised TRI NAICS

reporting codes and is not an exhaustive list of all NAICS reporting codes subject to EPCRA section 313 and PPA section 6607. Table 1 also includes notes where a 2022 NAICS code is the result of merging 2017 NAICS codes. In those cases, EPA is clarifying which subset of the 2022 NAICS code is covered by TRI. (Note that non-TRI-covered NAICS codes will not be listed in the table.) A complete listing of all TRI-covered facilities can be found in the regulations at 40 CFR 372.23.

TABLE 1—MODIFIED TRI REPORTING NAICS CODES

2017 NAICS code	2017 NAICS and U.S. description	2022 NAICS code	2022 NAICS and U.S. description
212111	Bituminous Coal and Lignite Surface Mining	212114	Surface Coal Mining.
212112	Bituminous Coal Underground Mining	212115	Underground Coal Mining.
212113	Anthracite Mining—*anthracite surface mining* activity	212114	Surface Coal Mining.
212113	Anthracite Mining—*anthracite underground mining* activity.	212115	Underground Coal Mining.
212221	Gold Ore Mining	212220	Gold Ore and Silver Ore Mining.
212222	Silver Ore Mining	”	”
212299	All Other Metal Ore Mining	212290.	Other Metal Ore Mining. *This merges both TRI-covered and non-TRI-covered NAICS codes. Only 212299: All Other Metal Ore Mining was covered by TRI. TRI will note that only “All Other Metal Ore Mining” facilities under NAICS code 212290 are required to report.*
212324	Kaolin and Ball Clay Mining	212323	Kaolin, Clay, and Ceramic and Refractory Minerals Mining.
212325	Clay and Ceramic and Refractory Minerals Mining	”	”
212393	Other Chemical and Fertilizer Mineral Mining	212390	Other Nonmetallic Mineral Mining and Quarrying.
212399	All Other Nonmetallic Mineral Mining	”	” *This merges both TRI-covered and non-TRI-covered NAICS codes. Only 212393 and 212399 were covered by TRI. TRI will note that only “Other Chemical and Fertilizer Mineral Mining” and “All Other Nonmetallic Mineral Mining” facilities under NAICS code 212390 are required to report.*
315110	Hosiery and Sock Mills	315120	Apparel Knitting Mills.
315190	Other Apparel Knitting Mills	”	”
315220	Men’s and Boys’ Cut and Sew Apparel Manufacturing	315250	Cut and Sew Apparel Manufacturing (except Contractors).
315240	Women’s, Girls’, and Infants’ Cut and Sew Apparel Manufacturing.	”	”
315280	Other Cut and Sew Apparel Manufacturing	”	”
316992	Women’s Handbag and Purse Manufacturing	316990	Other Leather and Allied Product Manufacturing.
316998	All Other Leather Good and Allied Product Manufacturing.	”	”
321213	Engineered Wood Member (except Truss) Manufacturing.	321215	Engineered Wood Member Manufacturing
321214	Truss Manufacturing	”	”
322121	Paper (except Newsprint) Mills	322120	Paper Mills.
322122	Newsprint Mills	”	”
325314	Fertilizer (Mixing Only) Manufacturing	325315, 325314	Compost Manufacturing Fertilizer (Mixing Only) Manufacturing.
333244	Printing Machinery Equipment Manufacturing	333248	All Other Industrial Machinery Manufacturing.
333249	Other Industrial Machinery Manufacturing	”	”
333314	Optical Instrument and Lens Manufacturing	333310	Commercial and Service Industry Machinery Manufacturing.
333316	Photographic and Photocopying Equipment Manufacturing.	”	”
333318	Other Commercial and Service Industry Machinery Manufacturing.	”	”
333997	Scale and Balance Manufacturing	333998	All Other Miscellaneous General Purpose Machinery Manufacturing.
333999	All Other Miscellaneous General Purpose Machinery Manufacturing.	”	”
334613	Blank Magnetic and Optical Recording Media Manufacturing.	334610	Manufacturing and Reproducing Magnetic and Optical Media.
334614	Software and Other Prerecorded Compact Disc, Tape, and Record Reproducing.	”	”
335121	Residential Electric Lighting Fixture Manufacturing	335131	Residential Electric Lighting Fixture Manufacturing.
335122	Commercial, Industrial, and Institutional Electric Lighting Fixture Manufacturing.	335132	Commercial, Industrial, and Institutional Electric Lighting Fixture Manufacturing.
335110	Electric Lamp Bulb and Part Manufacturing	335139	Electric Lamp Bulb and Other Lighting Equipment Manufacturing.
335129	Other Lighting Equipment Manufacturing	”	”
335911	Storage Battery Manufacturing	335910	Battery Manufacturing.
335912	Primary Battery Manufacturing	”	”

TABLE 1—MODIFIED TRI REPORTING NAICS CODES—Continued

2017 NAICS code	2017 NAICS and U.S. description	2022 NAICS code	2022 NAICS and U.S. description
336111	Automobile Manufacturing	336110	Automobile and Light Duty Motor Vehicle Manufacturing.
336112	Light Truck and Utility Vehicle Manufacturing	”	”
337124	Metal Household Furniture Manufacturing	337126	Household Furniture (except Wood and Upholstered) Manufacturing.
337125	Household Furniture (except Wood and Metal) Manufacturing.	”	”
425110	Business to Business Electronic Markets	425120	Wholesale Trade Agents and Brokers.
511110	Newspaper Publishers	513110	Newspaper Publishers.
519130	Internet Publishing and Broadcasting and Web Search Portals—*Internet Newspaper Publishers* activity.	”	”
511120	Periodical Publishers	513120	Periodical Publishers.
519130	Internet Publishing and Broadcasting and Web Search Portals—*Internet Periodical Publishers* activity.	”	”
511130	Book Publishers	513130	Book Publishers.
519130	Internet Publishing and Broadcasting and Web Search Portals—*Internet Book Publishers* activity.	”	”
511140	Directory and Mailing List Publishers	513140	Directory and Mailing List Publishers.
519130	Internet Publishing and Broadcasting and Web Search Portals—*Internet Directory and Mailing List Publishers* activity.	”	”
511191	Greeting Card Publishers	513191	Greeting Card Publishers.
519130	Internet Publishing and Broadcasting and Web Search Portals for *Internet Greeting Card Publishers* activity.	”	”
511199	All Other Publishers	513199	All Other Publishers.
519130	Internet Publishing and Broadcasting and Web Search Portals for *All other Internet Publishers* activity.	”	”
519130	Internet Publishing and Broadcasting and Web Search Portals—*Internet Broadcasting* activity.	516210	Media Streaming Distribution Services, Social Networks, and Other Media Networks and Content Providers. *This merges both TRI-covered and non-TRI-covered NAICS codes. Only 519130: Internet Publishing and Broadcasting and Web Search Portals was covered by TRI. TRI will note that only certain ‘‘Internet Broadcasting’’ facilities under NAICS code 516210 are required to report.*
519130	Internet Publishing and Broadcasting and Web Search Portals—*Web Search Portals* activity.	519290	Web Search Portals and All Other Information Services. *This merges both TRI-covered and non-TRI-covered NAICS codes. Only 519130: Internet Publishing and Broadcasting and Web Search Portals was covered by TRI. TRI will note that only certain ‘‘Web Search Portals’’ facilities under NAICS code 519290 are required to report.*

2. Listing of Certain NAICS Codes in the Utilities Industry Sector

Additionally, facilities included in the following NAICS manufacturing codes will be listed at 40 CFR 372.23 and will be subject to TRI reporting requirements (see 40 CFR part 372—[AMENDED]): 221114—Solar Electric Power Generation; 221115—Wind Electric Power Generation; 221116—Geothermal Electric Power Generation; and 221117—Biomass Electric Power Generation). In 1997, when EPA added the electric utility industry sector to the scope of the TRI, the Agency qualified the addition to include all facilities which ‘‘burn any quantity of coal or oil to generate power for distribution in commerce.’’ (62 FR 23834, May 1, 1997; FRL–5578–3) (Ref. 3). Further, the Agency clearly stated that this addition includes any facility classified under SIC codes 4911, 4931, or 4939 that combusts coal and/or oil for the purpose of generating power for distribution in commerce. EPA clearly stated that this coverage includes a facility that burns ‘‘any quantity’’ of coal or oil to generate power for distribution in commerce, noting examples where a facility might burn coal or oil for purposes other than distribution in commerce and thus not fit the qualifier provided for the industry sector. (62 FR 23834, 23863) (Ref. 3).

The 2007 NAICS to 2012 NAICS revision split NAICS 221119 (a NAICS code at the time covered by TRI due to its crosswalk to SIC codes 4911, 4931, and 4939) into multiple codes (*i.e.,* 221114, 221115, 221116, 221117, and 221118). When EPA updated the set of 2007 NAICS codes used by TRI to conform to the 2012 NAICS revision, the Agency listed only 221118, neglecting to include 221114, 221115, 221116, and 221117. (78 FR 42875) (Ref. 2). However, as provided by the 1997 rule that included electricity generating facilities that combust coal and/or oil for the purpose of generating power for distribution in commerce, these NAICS codes should have been included in the

CFR. Further, because the CFR lists SIC codes 4911, 4931, and 4939 as being regulated by TRI, facilities in NAICS codes 221114, 221115, 221116, and 221117 would be regulated by TRI should they combust coal and/or oil for the purpose of generating power for distribution in commerce despite the Agency's oversight in terms of failing to list these NAICS codes in the CFR. Therefore, facilities identifying with these NAICS codes (*i.e.,* 221114, 221115, 22116, and 221117) are covered under TRI reporting regulation and EPA proposes to address its previous oversight by adding these NAICS codes to 40 CFR 372.23. Similarly, in the 2006 rule to include NAICS codes in the regulations for TRI, EPA neglected to include NAICS code 221210. SIC codes 4931 and 4939 are covered TRI reporting codes (40 CFR 372.23(b), 62 FR 23834). Both of these SIC codes crosswalk to multiple NAICS codes which are listed on the CFR, except for 221210. EPA acknowledges it was an oversight not to include 221210 in the 2006 rule adopting NAICS codes for TRI reporting (71 FR 32464) (Ref. 1) and proposes to add 221210 to 40 CFR 372.23 for this NAICS update rule.

Crosswalk tables between all 2017 NAICS codes and 2022 NAICS codes can be found on the internet at *https://www.census.gov/naics/.*

3. Updates to 40 CFR Part 372 To Accommodate EPCRA Section 313(b)(2)

As authorized under EPCRA section 313(b)(2), the EPA Administrator may determine that a particular facility is subject to the requirements of EPCRA section 313(a) on the basis of the toxicity of a chemical, the facility's proximity to other facilities that release the chemical or to population centers, the history of releases of the chemical at the facility, or other factors the Administrator deems appropriate. This authority has been codified previously in TRI regulations, describing the process for modifying the list of covered facilities (40 CFR 372.20(b)). EPA is proposing to also codify this discretionary authority at 40 CFR 372.22, which describes the criteria to determine whether a facility must report to TRI for a certain calendar year. This proposed edit is a conforming edit to accommodate the longstanding discretionary authority under EPCRA section 313(b)(2), and this edit would not alter the universe of EPCRA section 313 reporters or any TRI reporting requirements. This additional criteria for facilities reporting to TRI will be added to 40 CFR 372.22 (see part 372—[AMENDED]).

E. What are the incremental impacts of this action?

EPA analyzed the potential costs and benefits associated with this action and determined that since this action will not add or remove any reporting requirements, there is no net increase in respondent burden or other economic impacts to consider.

F. Are there potentially disproportionate impacts for children health?

EPA interprets Executive Order 13045 (62 FR 19885, April 23, 1997), as applying only to those regulatory actions that concern health or safety risks that the EPA has reason to believe may disproportionately affect children, per the definition of ''covered regulatory action'' in section 2–202 of the Executive Order. This action is not subject to Executive Order 13045 because it does not concern an environmental health risk or safety risk.

II. References

The following is a listing of the documents that are specifically referenced in this document. The docket includes these documents and other information considered by EPA, including documents that are referenced within the documents that are included in the docket, even if the referenced document is not physically located in the docket. For assistance in locating these other documents, please consult the technical person listed under **FOR FURTHER INFORMATION CONTACT**.

1. U.S. EPA. Community Right-to-Know; Toxic Chemical Release Reporting Using North American Industry Classification System (NAICS); Final Rule. **Federal Register**. 71 FR 32464, June 6, 2006 (FRL–8180–2).
2. U.S. EPA. Community Right-to-Know; Adoption of 2012 North American Industry Classification System (NAICS) Codes for Toxics Release Inventory (TRI) Reporting; Final Rule. **Federal Register**. 78 FR 42875, July 18, 2013 (FRL–9825–8).
3. U.S. EPA. Addition of Facilities in Certain Industry Sectors; Revised Interpretation of Otherwise Use; Toxic Release Inventory Reporting; Community Right-to-Know; Final Rule. **Federal Register**. 62 FR 23834, May 1, 1997 (FRL–5578–3).

III. Statutory and Executive Order Reviews

Additional information about these statutes and Executive Orders can be found at *https://www.epa.gov/laws-regulations/laws-and-executive-orders.*

A. Executive Order 12866: Regulatory Planning and Review and Executive Order 13563: Improving Regulation and Regulatory Review

This action is not a significant regulatory action and was therefore not submitted to the Office of Management and Budget (OMB) for review under Executive Order 12866 (58 FR 51735, October 4, 1993) and Executive Order 13563 (76 FR 3821, January 21, 2011).

B. Paperwork Reduction Act (PRA)

This action does not impose any new information collection burden under the PRA, 44 U.S.C. 3501 *et seq.* Facilities that are affected by the rule are already required to report their industrial classification codes on the approved reporting forms under EPCRA section 313 and PPA section 6607. In addition, OMB has previously approved the information collection activities involving Form R and Form A as contained in 40 CFR part 372 under OMB Control No. 20070–0212 (EPA ICR No. 2613.04).

Under the PRA, an agency may not conduct or sponsor, and a person is not required to respond to, a collection of information, unless it displays a currently valid OMB control number. The OMB control numbers are displayed either by publication in the **Federal Register** or by other appropriate means, such as on the related collection instrument or form, if applicable. The display of OMB control numbers for certain EPA regulations is consolidated in 40 CFR part 9.

C. Regulatory Flexibility Act (RFA)

I certify that this action will not have a significant economic impact on a substantial number of small entities under the RFA, 5 U.S.C. 601 *et seq.* In making this determination, EPA concludes that the impact of concern for this rule is any significant adverse economic impact on small entities and that the agency is certifying that this rule will not have a significant economic impact on a substantial number of small entities if the rule has no net burden on the small entities subject to the rule. This proposed rule adds no new reporting requirements, and there would be no net increase in respondent burden and costs. This rule would only update the NAICS codes already reported by respondents. As such, this action will not impose any new requirements on small entities.

D. Unfunded Mandates Reform Act (UMRA)

This action does not contain any unfunded mandate as described in UMRA, 2 U.S.C. 1531–1538, and does

not significantly or uniquely affect small governments. The action would impose no enforceable duty on any state, local or tribal governments or the private sector.

E. Executive Order 13132: Federalism

This action does not have federalism implications as specified in Executive Order 13132 (64 FR 43255, August 10, 1999), because it will not have substantial direct effects on the states, on the relationship between the national government and the states, or on the distribution of power and responsibilities among the various levels of government.

F. Executive Order 13175: Consultation and Coordination With Indian Tribal Governments

This action does not have tribal implications as specified in Executive Order 13175 (65 FR 67249, November 9, 2000), because it does not impose substantial direct compliance costs on Indian tribal governments. Thus, Executive Order 13175 does not apply to this action.

G. Executive Order 13045: Protection of Children From Environmental Health Risks and Safety Risks

EPA interprets Executive Order 13045 (62 FR 19885, April 23, 1997) as applying only to those regulatory actions that concern health or safety risks that the EPA has reason to believe may disproportionately affect children, per the definition of ''covered regulatory action'' in section 2–202 of the Executive Order. This action is not subject to Executive Order 13045 because it does not concern an environmental health risk or safety risk.

H. Executive Order 13211: Actions Concerning Regulations That Significantly Affect Energy Supply, Distribution, or Use

This action is not a ''significant energy action'' under Executive Order 13211 (66 FR 28355, May 22, 2001) because it is not likely to have a significant adverse effect on the supply, distribution or use of energy and has not otherwise been designated by the Administrator of OMB's Office of Information and Regulatory Affairs as a ''significant energy action.'' This action is not expected to affect energy use, energy supply or energy prices.

I. National Technology Transfer and Advancement Act (NTTAA)

This rulemaking does not involve technical standards. As such, NTTAA section 12(d), 15 U.S.C. 272 note, does not apply to this action.

J. Executive Order 12898: Federal Actions To Address Environmental Justice in Minority Populations and Low-Income Populations and Executive Order 14008: Tackling the Climate Crisis at Home and Abroad

In accordance with Executive Order 12898 (59 FR 7629, February 16, 1994) and Executive Order 14008 (86 FR 7619, January 27, 2021), EPA finds that this action will not result in disproportionately high and adverse human health, environmental, climate-related, or other cumulative impacts on disadvantaged communities because this action does not establish an environmental health or safety standard.

List of Subjects in 40 CFR Part 372

Environmental protection, Community right-to-know, Reporting and recordkeeping requirements, Toxic chemicals.

Dated: July 13, 2022.

Michal Freedhoff,

Assistant Administrator, Office of Chemical Safety and Pollution Prevention.

Therefore, for the reasons set forth in the preamble, it is proposed that 40 CFR chapter I be amended as follows:

PART 372—TOXIC CHEMICAL RELEASE REPORTING: COMMUNITY RIGHT-TO-KNOW

■ 1. The authority citation for part 372 continues to read as follows:

Authority: 42 U.S.C. 11023 and 11048.

■ 2. Amend § 372.22 by revising the introductory paragraph and adding paragraph (d) to read as follows:

§ 372.22 Covered facilities for toxic chemical release reporting.

A facility is a covered facility for a particular calendar year, and must report under 40 CFR 372.30, if the facility meets either all of the criteria in paragraphs (a) through (c), or all of the criteria in paragraphs (c) and (d), for that calendar year.

* * * * *

(d) The Administrator determined that applying the 42 U.S.C. 11023 requirements to the facility was warranted, pursuant to 42 U.S.C. 11023(b)(2) and 40 CFR 372.20(b).

■ 3. Amend § 372.23 by revising paragraphs (b) and (c) to read as follows:

§ 372.23 SIC and NAICS codes to which this Part applies.

* * * * *

(b) NAICS codes that correspond to SIC codes 20–39.

311—Food Manufacturing	Except 311119—Exception is limited to facilities previously classified under SIC 0723, Crop Preparation Services for Market, Except Cotton Ginning. Except 311340—Exception is limited to facilities previously classified under SIC 5441, Candy, Nut, and Confectionery Stores. Except 311352—Exception is limited to facilities previously classified under SIC 5441, Candy, Nut, and Confectionery Stores. Except 311611—Exception is limited to facilities previously classified under SIC 0751, Livestock Services, Except Veterinary. Except 311612—Exception is limited to facilities previously classified under SIC 5147, Meats and Meat Products. Except 311811—Exception is limited to facilities previously classified under SIC 5461, Retail Bakeries.
312—Beverage and Tobacco Product Manufacturing.	Except 312112—Exception is limited to facilities previously classified under SIC 5149, Groceries and Related Products, Not Elsewhere Classified. Except 312230—Exception is limited to facilities previously classified under SIC 7389, Business Services, Not Elsewhere Classified, except facilities primarily engaged in solvent recovery services on a contract or fee basis.
313—Textile Mills	Except 313310—Exception is limited to facilities previously classified under SIC 5131, Piece Goods, Notions, and Other Dry Goods; and facilities previously classified under SIC 7389, Business Services, Not Elsewhere Classified, except facilities primarily engaged in solvent recovery services on a contract or fee basis.
314—Textile Product Mills	Except 314120—Exception is limited to facilities previously classified under SIC 5714, Drapery, Curtain, and Upholstery Stores. Except 314999—Exception is limited to facilities previously classified under SIC 7389, Business Services, Not Elsewhere Classified, except facilities primarily engaged in solvent recovery services on a contract or fee basis.

315—Apparel Manufacturing	Except 315290—Exception is limited to facilities previously classified under SIC 5699, Miscellaneous Apparel and Accessory Stores.
316—Leather and Allied Product Manufacturing.	
321—Wood Product Manufacturing	
322—Paper Manufacturing	
323—Printing and Related Support Activities.	Except 323111—Exception is limited to facilities previously classified under SIC 7334, Photocopying and Duplicating Services.
324—Petroleum and Coal Products Manufacturing.	
325—Chemical Manufacturing	Except 325998—Exception is limited to facilities previously classified under SIC 7389, Business Services, Not Elsewhere Classified.
326—Plastics and Rubber Products Manufacturing.	Except 326212—Exception is limited to facilities previously classified under SIC 7534, Tire Retreading and Repair Shops.
327—Nonmetallic Mineral Product Manufacturing.	Except 327110—Exception is limited to facilities previously classified under SIC 5719, Miscellaneous Home Furnishings Stores.
331—Primary Metal Manufacturing	
332—Fabricated Metal Product Manufacturing.	
333—Machinery Manufacturing	
334—Computer and Electronic Product Manufacturing.	Except 334610—Exception is limited to facilities previously classified under SIC 7372, Prepackaged Software; and to facilities previously classified under SIC 7819, Services Allied to Motion Picture Production.
335—Electrical Equipment, Appliance, and Component Manufacturing.	Except 335312—Exception is limited to facilities previously classified under SIC 7694, Armature Rewinding Shops.
336—Transportation Equipment Manufacturing.	
337—Furniture and Related Product Manufacturing.	Except 337110—Exception is limited to facilities previously classified under SIC 5712, Furniture Stores.
	Except 337121—Exception is limited to facilities previously classified under SIC 5712, Furniture Stores.
	Except 337122—Exception is limited to facilities previously classified under SIC 5712, Furniture Stores.
339—Miscellaneous Manufacturing	Except 339113—Exception is limited to facilities previously classified under SIC 5999, Miscellaneous Retail Stores, Not Elsewhere Classified.
	Except 339115—Exception is limited to lens grinding facilities previously classified under SIC 5995, Optical Goods Stores.
	Except 339116—Exception is limited to facilities previously classified under SIC 8072, Dental Laboratories.
111998—All Other Miscellaneous Crop Farming.	Limited to facilities previously classified under SIC 2099, Food Preparations, Not Elsewhere Classified.
113310—Logging	
211130—Natural Gas Extraction	Limited to facilities that recover sulfur from natural gas and previously classified under SIC 2819, Industrial Inorganic Chemicals, Not Elsewhere Classified.
212323—Kaolin, Clay, and Ceramic and Refractory Minerals Mining.	Limited to facilities operating without a mine or quarry and previously classified under SIC 3295, Minerals and Earths, Ground or Otherwise Treated.
212390—Other Nonmetallic Mineral Mining and Quarrying.	Limited to facilities previously classified under SIC 3295, Minerals and Earths, Ground or Otherwise Treated.
488390—Other Support Activities for Water Transportation.	Limited to facilities previously classified under SIC 3731, Shipbuilding and Repairing.
512230—Music Publishers	Except facilities previously classified under SIC 8999, Services, Not Elsewhere Classified.
512250—Record Production and Distribution.	Limited to facilities previously classified under SIC 3652, Phonograph Records and Prerecorded Audio Tapes and Disks.
5131—Publishing Industries	Except for facilities primarily engaged in web search portals and except for facilities previously classified under SIC 7331, Direct Mail Advertising Services and SIC 8999, Services Not Elsewhere Classified.
516210—Media Streaming Distribution Services, Social Networks, and Other Media Networks and Content Providers.	Limited to Internet publishing facilities previously classified under SIC 2711, Newspapers: Publishing, or Publishing and Printing; facilities previously classified under SIC 2721, Periodicals: Publishing, or Publishing and Printing; facilities previously classified under SIC 2731, Books: Publishing, or Publishing and Printing; facilities previously classified under SIC 2741, Miscellaneous Publishing; facilities previously classified under SIC 2771, Greeting Cards; Except for facilities primarily engaged in web search portals.
519290—Web Search Portals and All Other Information Services.	Limited to Internet publishing facilities previously classified under SIC 2711, Newspapers: Publishing, or Publishing and Printing; facilities previously classified under SIC 2721, Periodicals: Publishing, or Publishing and Printing; facilities previously classified under SIC 2731, Books: Publishing, or Publishing and Printing; facilities previously classified under SIC 2741, Miscellaneous Publishing; facilities previously classified under SIC 2771, Greeting Cards; Except for facilities primarily engaged in web search portals.
541713—Research and Development in Nanotechnology.	Limited to facilities previously classified under SIC 3764, Guided Missile and Space Vehicle Propulsion Units and Propulsion Unit Parts; and facilities previously classified under SIC 3769, Guided Missile and Space Vehicle Parts and Auxiliary Equipment, Not Elsewhere Classified.
541715—Research and Development in the Physical, Engineering, and Life Sciences (except Nanotechnology and Biotechnology).	Limited to facilities previously classified under SIC 3764, Guided Missile and Space Vehicle Propulsion Units and Propulsion Unit Parts; and facilities previously classified under SIC 3769, Guided Missile and Space Vehicle Parts and Auxiliary Equipment, Not Elsewhere Classified.
811490—Other Personal and Household Goods Repair and Maintenance.	Limited to facilities previously classified under SIC 3732, Boat Building and Repairing.

(c) NAICS codes that correspond to SIC codes other than SIC codes 20–39.

211130—Natural Gas Extraction	Limited to facilities classified under SIC 1321, Natural Gas Liquids.
212114—Surface Coal Mining.	
212115—Underground Coal Mining	
212220—Gold Ore and Silver Ore Mining.	
212230—Copper, Nickel, Lead and Zinc Mining.	
212290—Other Metal Ore Mining ...	Limited to facilities previously classified under SIC 1061, Ferroalloy Ores, Except Vanadium (nickel); and facilities previously classified under SIC 1099, Miscellaneous Metal Ores, Not Elsewhere Classified.
221111—Hydroelectric Power Generation.	Limited to facilities that combust coal and/or oil for the purpose of generating power for distribution in commerce.
221112—Fossil Fuel Electric Power Generation.	Limited to facilities that combust coal and/or oil for the purpose of generating power for distribution in commerce.
221113—Nuclear Electric Power Generation.	Limited to facilities that combust coal and/or oil for the purpose of generating power for distribution in commerce.
221114—Solar Electric Power Generation.	Limited to facilities that combust coal and/or oil for the purpose of generating power for distribution in commerce.
221115—Wind Electric Power Generation.	Limited to facilities that combust coal and/or oil for the purpose of generating power for distribution in commerce.
221116—Geothermal Electric Power Generation.	Limited to facilities that combust coal and/or oil for the purpose of generating power for distribution in commerce.
221117—Biomass Electric Power Generation.	Limited to facilities that combust coal and/or oil for the purpose of generating power for distribution in commerce.
221118—Other Electric Power Generation.	Limited to facilities that combust coal and/or oil for the purpose of generating power for distribution in commerce.
221121—Electric Bulk Power Transmission and Control.	Limited to facilities that combust coal and/or oil for the purpose of generating power for distribution in commerce.
221122—Electric Power Distribution	Limited to facilities that combust coal and/or oil for the purpose of generating power for distribution in commerce.
221210—Natural Gas Distribution ..	Limited to facilities previously classified under SIC 4931, Electric and Other Services Combined and facilities previously classified under SIC 4939, Combination Utilities, Not Elsewhere Classified.
221330—Steam and Air Conditioning Supply.	Limited to facilities previously classified under SIC 4939, Combination Utilities, Not Elsewhere Classified.
424690—Other Chemical and Allied Products Merchant Wholesalers.	
424710—Petroleum Bulk Stations and Terminals.	
425120—Wholesale Trade Agents and Brokers.	Limited to facilities previously classified in SIC 5169, Chemicals and Allied Products, Not Elsewhere Classified.
562112—Hazardous Waste Collection.	Limited to facilities primarily engaged in solvent recovery services on a contract or fee basis and previously classified under SIC 7389, Business Services, Not Elsewhere Classified;
562211—Hazardous Waste Treatment and Disposal.	Limited to facilities regulated under the Resource Conservation and Recovery Act, subtitle C, 42 U.S.C. 6921 *et seq.*
562212—Solid Waste Landfill	Limited to facilities regulated under the Resource Conservation and Recovery Act, subtitle C, 42 U.S.C. 6921 *et seq.*
562213—Solid Waste Combustors and Incinerators.	Limited to facilities regulated under the Resource Conservation and Recovery Act, subtitle C, 42 U.S.C. 6921 *et seq.*
562219—Other Nonhazardous Waste Treatment and Disposal.	Limited to facilities regulated under the Resource Conservation and Recovery Act, subtitle C, 42 U.S.C. 6921 *et seq.*
562920—Materials Recovery Facilities.	Limited to facilities regulated under the Resource Conservation and Recovery Act, subtitle C, 42 U.S.C. 6921 *et seq.*

* * * * *

[FR Doc. 2022–15287 Filed 7–21–22; 8:45 am]

BILLING CODE 6560–50–P

Notices

Federal Register

Vol. 87, No. 140

Friday, July 22, 2022

This section of the FEDERAL REGISTER contains documents other than rules or proposed rules that are applicable to the public. Notices of hearings and investigations, committee meetings, agency decisions and rulings, delegations of authority, filing of petitions and applications and agency statements of organization and functions are examples of documents appearing in this section.

DEPARTMENT OF AGRICULTURE

Submission for OMB Review; Comment Request

July 18, 2022.

The Department of Agriculture will submit the following information collection requirement(s) to OMB for review and clearance under the Paperwork Reduction Act of 1995, Public Law 104–13 on or after the date of publication of this notice. Comments are requested regarding: (1) whether the collection of information is necessary for the proper performance of the functions of the agency, including whether the information will have practical utility; (2) the accuracy of the agency's estimate of burden including the validity of the methodology and assumptions used; (3) ways to enhance the quality, utility and clarity of the information to be collected; and (4) ways to minimize the burden of the collection of information on those who are to respond, including through the use of appropriate automated, electronic, mechanical, or other technological collection techniques or other forms of information technology.

Comments regarding these information collections are best assured of having their full effect if received by August 22, 2022. Written comments and recommendations for the proposed information collection should be submitted within 30 days of the publication of this notice on the following website *www.reginfo.gov/public/do/PRAMain.* Find this particular information collection by selecting ''Currently under 30-day Review—Open for Public Comments'' or by using the search function.

An agency may not conduct or sponsor a collection of information unless the collection of information displays a currently valid OMB control number and the agency informs potential persons who are to respond to the collection of information that such persons are not required to respond to the collection of information unless it displays a currently valid OMB control number.

National Agricultural Statistics Service (NASS)

Title: Agricultural Resource Management and Chemical Use Surveys—Substantive Change.

OMB Control Number: 0535–0218.

Summary of Collection: General authority for these data collection activities is granted under U.S. Code Title 7, Section 2204 which specifies that ''The Secretary of Agriculture shall procure and preserve all information concerning agriculture which he can obtain . . . by the collection of statistics . . .''. The primary objective of the National Agricultural Statistics Service (NASS) is to provide data users with timely and reliable agricultural production and economic statistics, as well as environmental and specialty agricultural related statistics. To accomplish this objective, NASS relies on the use of diverse surveys that show changes within the farming industry over time.

The National Agricultural Statistics Service (NASS) is requesting a substantive change to the ARMS and Chemical Use Survey information collection request (OMB No. 0535–0218) for the 2022 ARMS Phase 2, and Vegetable Chemical Use Surveys. The change is needed to accommodate the addition of the 2022 ARMS Phase 2 and 2022 Vegetable Chemical Use questionnaires and respondent booklets.

The target commodities for the 2022 cycle are: wheat, potatoes, and vegetable chemical use. Previously the wheat data were collected on three different versions (Durum, other spring, and winter), but this year the three varieties are all included on the wheat version.

There is a decrease of 370 hours of burden in this substantive change request resulting in a new total of 106,015 hours. The decrease was due to the removal of questions from the Production Practices Report (Potatoes) that were previously requested by the USDA Office of Pest Management Policy (OPMP). The removal of questions reduced the average time per respondent from 50 to 35 minutes.

Need and Use of the Information: These changes will provide updated chemical use data for wheat, potatoes, and vegetables that are essential for evaluating the economic and environmental consequences of farm chemical regulations.

Description of Respondents: Farms and Ranches.

Number of Respondents: 105,850.

Frequency of Responses: Reporting: Less than five times per year.

Total Burden Hours: 106,015.

Levi Harrell,

Departmental Information Collection Clearance Officer.

[FR Doc. 2022–15738 Filed 7–21–22; 8:45 am]

BILLING CODE 3410–20–P

DEPARTMENT OF AGRICULTURE

Rural Housing Service

[Docket No. RHS–22–CF–0010]

60-Day Notice of Proposed Information Collection: Debt Settlement, Community and Business Programs; OMB Control No.: 0575–0124

AGENCY: Rural Housing Service, USDA.

ACTION: Notice; request for comments.

SUMMARY: In accordance with the Paperwork Reduction Act of 1995, the United States Department of Agriculture (USDA), Rural Housing Service (RHS) announces its' intention to request an extension of a currently approved information collection and invites comments on this information collection.

DATES: Comments on this notice must be received by September 20, 2022 to be assured of consideration.

ADDRESSES: *Comments may be submitted by the Federal eRulemaking Portal:* Go to *http://www.regulations.gov* and, in the ''Search Field'' box, labeled ''Search for Rules, Proposed Rules, Notices or Supporting Documents,'' enter the following docket number: (RHS–22–CF–0010). To submit or view public comments, click the ''Search'' button, select the ''Documents'' tab, then select the following document title (Debt Settlement, Community and Business Programs) from the ''Search Results,'' and select the ''Comment'' button. Before inputting your comments, you may also review the ''Commenter's Checklist'' (optional). Insert your comments under the ''Comment'' title, click ''Browse'' to attach files (if available). Input your email address and select ''Submit

Comment.'' Information on using *Regulations.gov*, including instructions for accessing documents, submitting comments, and viewing the docket after the close of the comment period, is available through the site's ''FAQ'' link.

FOR FURTHER INFORMATION CONTACT: MaryPat Daskal, Chief, Branch 1, Rural Development Innovation Center—Regulations Management Division, United States Department of Agriculture, 1400 Independence Avenue SW, South Building, Washington, DC 20250–1522. Telephone: (202) 720–7853. Email *MaryPat.Daskla@usda.gov.*

SUPPLEMENTARY INFORMATION: The Office of Management and Budget's (OMB) regulation (5 CFR part 1320) implementing provisions of the Paperwork Reduction Act of 1995 (Pub. L. 104–13) requires that interested members of the public and affected agencies have an opportunity to comment on information collection and recordkeeping activities (see 5 CFR 1320.8(d)). This notice identifies the following information collection that RHS is submitting to OMB as extension to an existing collection with Agency adjustment.

Title: 7 CFR part 1956–C, Debt Settlement—Community and Business Programs.

OMB Control Number: 0575–0124.

Expiration Date of Approval: December 31, 2022.

Type of Request: Revision of a currently approved information collection.

Estimate of Burden: Public reporting for this collection of information is estimated to average 6.2 hours per response.

Respondents: Not-for-profit institutions and other businesses.

Estimated Number of Respondents: 97.

Estimated Number of Responses: 205.

Estimated Number of Responses per Respondent: 7.5.

Estimated Total Annual Burden on Respondents: 1,265.

Abstract: Rural Development (including the Rural Housing Service (RHS), the Rural Business-Cooperative Service (RBS), and the Rural Utilities Service (RUS), hereinafter referred to as Agency, are the credit agencies for agricultural and rural development for the United States Department of Agriculture. The Agency offers supervised credit to develop, improve, and operate family farms, modest housing, essential community facilities, and business and industry across rural communities. Rural Development offers loans, grants, and loan guarantees to help create jobs and support economic development and essential services such as housing; health care; first responder services and equipment; and water, electric and communications infrastructure.

The Community Facilities loan program of RHS is authorized by Section 306 of the Consolidated Farm and Rural Development Act (7 U.S.C. 1926). The purpose of the Community Facilities loan program is to make loans to public entities, nonprofit corporations, and Indian tribes for the development of essential community facilities for public use in rural areas.

The Business and Industry program is authorized by Section 310 B 7 (U.S.C. 1932) (Pub. L. 92–419, August 30, 1972) of the Consolidated Farm and Rural Development Act to improve, develop, or finance business, industry, and employment and improve the economic and environmental climate in rural communities. The Business and Industry programs eligible for debt settlement under this provision are limited to Business and Industry direct loans. Debt Settlement of Economic Opportunity Cooperative Loans, Claims Against Third Party Converters, Non-program loans, Rural Business Enterprise/Television Demonstration grants, Rural Development Loan Fund loans, Intermediary Relending Program loans, and Nonprofit National Corporation loans and grants, are not authorized. Under independent statutory authority, settlement under these programs is handled pursuant to the Federal Claims Collection Joint Standards, 4 CFR parts 101 through 105.

The debt settlement program provides the delinquent client with an equitable tool for the compromise, adjustment, cancellation, or charge-off of a debt owed to the Agency. The term settlement is used for convenience in referring to compromise, adjustment, cancellation, or charge off actions individually or collectively. If a debt is eligible for settlement, the debt settlement authorities are extended to the debtor. All debtors are entitled to impartial treatment and uniform consideration under this subpart. The information collected is similar to that required by a commercial lender in similar circumstances.

The information collected is similar to that required by a commercial lender in similar circumstances. Information will be collected by the field offices from borrowers, consultants, lenders, and attorneys. Failure to collect information could result in improper servicing of these loans.

Comments are invited on:

(a) Whether the collection of information is necessary for the proper performance of the functions of the agency, including whether the information will have practical utility.

(b) the accuracy of the agency's estimate of the burden of the collection of information including the validity of the methodology and assumptions used.

(c) ways to enhance the quality, utility, and clarity of the information to be collected; and (d) ways to minimize the burden of the collection of information on respondents, including through the use of appropriate automated, electronic, mechanical, or other technological collection techniques or other forms of information technology. All responses to this notice will be summarized and included in the request for OMB approval. All comments will become a matter of public record.

Copies of this information collection can be obtained from Arlette Mussington, Rural Development Innovation Center—Regulations Management Division, at (202) 720–7853. Email: *arlette.mussington@usda.gov*.

All responses to this notice will be summarized and included in the request for OMB approval. All comments will also become a matter of public record.

Joaquin Altoro,

Administrator, Rural Housing Service.

[FR Doc. 2022–15651 Filed 7–21–22; 8:45 am]

BILLING CODE 3410–XV–P

DEPARTMENT OF AGRICULTURE

Rural Housing Service

[Docket No. RHS–22–NONE–0013]

60-Day Notice of Proposed Information Collection: Analyzing Credit Needs and Graduation of Borrowers; OMB Control No.: 0575–0093

AGENCY: Rural Housing Service, USDA.

ACTION: Notice; request for comments.

SUMMARY: In accordance with the Paperwork Reduction Act of 1995, as amended, the United States Department of Agriculture (USDA), the Rural Housing Service (Agency) announces its' intention to request an extension of a currently approved information collection and invites comments on this information collection.

DATES: Comments on this notice must be received by September 20, 2022 to be assured of consideration.

ADDRESSES: Comments may be submitted electronically by the Federal eRulemaking Portal: Go to *http://www.regulations.gov* and, in the ''Search Field'' box, labeled ''Search for

Rules, Proposed Rules, Notices or Supporting Documents,'' enter the following docket number: (RHS–22–NONE–0013). To submit or view public comments, click the ''Search'' button, select the ''Documents'' tab, then select the following document title: (60-Day Notice of Proposed Information Collection: Analyzing Credit Needs and Graduation of Borrowers; OMB Control No.: 0575–0093) from the ''Search Results'' and select the ''Comment'' button. Before inputting your comments, you may also review the ''Commenter's Checklist'' (optional). Insert your comments under the ''Comment'' title, click ''Browse'' to attach files (if available). Input your email address and select ''Submit Comment.''

Information on using *Regulations.gov*, including instructions for accessing documents, submitting comments, and viewing the docket after the close of the comment period, is available through the site's ''FAQ'' link.

Other Information: Additional information about Rural Development and its programs is available on the internet at *https://www.rd.usda.gov.*

All comments will be available for public inspection online at the Federal eRulemaking Portal (*https://www.regulations.gov*).

FOR FURTHER INFORMATION CONTACT: Crystal Pemberton, Management Analyst, Branch 1, Rural Development Innovation Center—Regulations Management Division, United States Department of Agriculture, 1400 Independence Avenue SW, South Building, Washington, DC 20250–1522. Telephone: 202–260–8621. Email *Crystal.Pemberton@usda.gov.*

SUPPLEMENTARY INFORMATION: The Office of Management and Budget's (OMB) regulation (5 CFR 1320) implementing provisions of the Paperwork Reduction Act of 1995 (Pub. L. 104–13) requires that interested members of the public and affected agencies have an opportunity to comment on information collection and recordkeeping activities (see, 5 CFR 1320.8(d)). This notice identifies the following information collection that the Agency is submitting to OMB as extension to an existing collection with Agency adjustment.

Title: 7 CFR part 1951; subpart F, Analyzing Credit Needs and Graduation of Borrowers.

OMB Control Number: 0575–0093.

Expiration Date of Approval: November 30, 2022.

Type of Request: Extension of a currently approved information collection.

Estimate of Burden: Public reporting burden for this collection of information is estimated to average 1 hours per response.

Respondents: Public bodies, Not for Profits, or Indian Tribes.

Estimated Number of Respondents: 437.

Estimated Number of Responses per Respondent: 1.

Estimated Number of Hours per Response: 2.

Estimated Total Annual Burden on Respondents: 884.

Abstract: Section 333 of the Consolidated Farm and Rural Development Act (CONACT) (7 U.S.C. 1983) requires the Agencies to graduate their direct loan borrowers to other credit when possible. Graduation is required because the Government loans are not to be extended beyond a borrower's need for subsidized rates or Government credit. Borrowers must refinance their direct Government loan when other credit becomes available at reasonable rates and terms. If other credit is not available, the Agencies will continue to periodically review the account for possible graduation intervals. The information collected to carry out these statutory mandates is financial data such as amount of income, operating expenses, asset values and liabilities. This information collection is then submitted by the Agencies to private creditors. The reporting burden covered by this collection of information consists of forms, documents and written burden to support a request for funding for analyzing credit needs and graduation of borrowers.

Comments are invited on:

(a) Whether the proposed collection of information is necessary for the proper performance of the functions of the Agency, including whether the information will have practical utility;

(b) the accuracy of the Agency's estimate of the burden of the proposed collection of information including the validity of the methodology and assumptions used;

(c) ways to enhance the quality, utility and clarity of the information to be collected; and

(d) ways to minimize the burden of the collection of information on those who are to respond, including through the use of appropriate automated, electronic, mechanical, or other technological collection techniques or other forms of information technology.

Copies of this information collection can be obtained from Crystal Pemberton, Rural Development Innovation Center—Regulations Management Division, at 202–260–8621. Email: *Crystal.Pemberton@usda.gov.*

All responses to this notice will be summarized and included in the request for OMB approval. All comments will also become a matter of public record.

Joaquin Altoro,

Administrator, Rural Housing Service.

[FR Doc. 2022–15650 Filed 7–21–22; 8:45 am]

BILLING CODE 3410–XV–P

DEPARTMENT OF AGRICULTURE

Rural Housing Service

[Docket No. RHS–22–SFH–0001]

60-Day Notice of Proposed Information Collection: Form RD 410–8 ''Applicant Reference Letter'' (A Request for Credit References); OMB Control No.: 0575–0091

AGENCY: Rural Housing Service (RHS), USDA.

ACTION: Notice; request for comments.

SUMMARY: In accordance with the Paperwork Reduction Act of 1995, as amended, the United States Department of Agriculture (USDA), Rural Housing Service (RHS), announces its' intention to request an extension of a currently approved information collection and invites comments on this information collection.

DATES: Comments on this notice must be received by September 20, 2022 to be assured of consideration.

ADDRESSES: Comments may be submitted by the Federal eRulemaking Portal: Go to *http://www.regulations.gov* and, in the ''Search Field'' box, labeled ''Search for Rules, Proposed Rules, Notices, or Supporting Documents,'' enter the following docket number: (RHS–22–SFH–0001). To submit or view public comments, click the ''Documents'' tab, then select the following document title: (Applicant Reference Letter (A Request for Credit Reference) from the ''Search Results,'' and select the ''Comment'' button. Before inputting your comments, you may also review the ''Commenter's Checklist'' (optional). Insert your comments under the ''Comment'' title, click ''Browse'' to attach files (if available). Input your email address and select ''Submit Comment.'' Information on using *Regulations.gov*, including instructions for accessing documents, submitting comments, and viewing the docket after the close of the comment period, is available through the site's ''FAQ'' link.

FOR FURTHER INFORMATION CONTACT: MaryPat Daskal, Chief, Branch 1, Rural

Development Innovation Center—Regulations Management Division, United States Department of Agriculture, 1400 Independence Avenue SW, South Building, Washington, DC 20250–1522. Telephone: (202) 720–7853. Email *MaryPat.Daskla@usda.gov.*

SUPPLEMENTARY INFORMATION: The Office of Management and Budget's (OMB) regulation (5 CFR part 1320) implementing provisions of the Paperwork Reduction Act of 1995 (Pub. L. 104–13) requires that interested members of the public and affected agencies have an opportunity to comment on information collection and recordkeeping activities (see 5 CFR 1320.8(d)). This notice identifies the following information collection that Rural Housing Service is submitting to OMB as extension to an existing collection with Agency adjustment.

Title: Form RD 410–8 ''Applicant Reference Letter'' (A request for Credit Reference).

OMB Control Number: 0575–0091.

Expiration Date of Approval: November 30, 2022.

Type of Request: Revision of a currently approved information collection.

Estimate of Burden: Public reporting for this collection of information is estimated to average 3 hour per response.

Respondents: Individuals or Households.

Estimated Number of Respondents: 1.

Estimated Number of Annual Responses: 1.

Estimated Number of Annual Responses per Respondent: 1.

Estimated Total Annual Burden on Respondents: 1 hour.

Abstract: The Rural Housing Service (RHS), under Section 502 of Title V of the Housing Act of 1949, as amended, provides financial assistance to construct, improve, alter, repair, replace, or rehabilitate dwellings, which will provide modest, decent, safe, and sanitary housing to eligible individuals in rural areas. To receive a loan or grant, applicants must provide the Agency with a standard housing application (used by government and private lenders), and provide documentation, including their credit history, to support the same.

Form RD 410–8, ''Applicant Reference Letter'' is used by the Agency to obtain information about an applicant's credit history that does not appear on a credit report. The form can be used to document the applicant's ability to handle credit effectively in cases where an applicant has used nontraditional sources of credit which do not appear on a credit report. It also provides a mechanism for verifying repayment history for debts reported by the applicant on the loan application that do not appear on the credit report. This form asks only for specific, relevant information to determine the applicant's creditworthiness and to establish the applicant's history of prompt payments on debts. This information enables RHS to make better creditworthiness decisions.

Comments are invited on:

(a) Whether the collection of information is necessary for the proper performance of the functions of the agency, including whether the information will have practical utility.

(b) the accuracy of the agency's estimate of the burden of the collection of information including the validity of the methodology and assumptions used.

(c) ways to enhance the quality, utility, and clarity of the information to be collected; and (d) ways to minimize the burden of the collection of information on respondents, including through the use of appropriate automated, electronic, mechanical, or other technological collection techniques or other forms of information technology. All responses to this notice will be summarized and included in the request for OMB approval. All comments will become a matter of public record.

Copies of this information collection can be obtained from Arlette Mussington, Rural Development Innovation Center—Regulations Management Division, at (202) 720–2825. Email: *arlette.mussington@usda.gov.*

All responses to this notice will be summarized and included in the request for OMB approval. All comments will also become a matter of public record.

Joaquin Altoro,

Administrator, Rural Housing Service.

[FR Doc. 2022–15649 Filed 7–21–22; 8:45 am]

BILLING CODE 3410–XV–P

COMMISSION ON CIVIL RIGHTS

Notice of Public Meeting of the Nebraska Advisory Committee to the U.S. Commission on Civil Rights

AGENCY: U.S. Commission on Civil Rights.

ACTION: Announcement of meeting.

SUMMARY: Notice is hereby given, pursuant to the provisions of the rules and regulations of the U.S. Commission on Civil Rights (Commission) and the Federal Advisory Committee Act that the Nebraska Advisory Committee (Committee) to the U.S. Commission on Civil Rights will hold a meeting on Tuesday, August 9, 2022 at 12:00 p.m.–1:00 p.m. Central time. The purpose for the meeting is to discuss and brainstorm potential civil rights topics for their first study of the 2021–2025 term.

DATES: The meeting will take place on Tuesday, August 9, 2022, from 12:00 p.m.–1:00 p.m. Central Time.

ADDRESSES:

Online Registration (Audio/Visual): https://civilrights.webex.com/civilrights/j.php?MTID=m468961b6e3bcae43ea744f619f156c5b.

Telephone (Audio Only): Dial 800–360–9505 USA Toll Free; Access code: 2761 318 1831#.

FOR FURTHER INFORMATION CONTACT: Victoria Moreno at *vmoreno@usccr.gov* or by phone at 434–515–0204.

SUPPLEMENTARY INFORMATION: This meeting is available to the public through WebEx link above. If joining only via phone, callers can expect to incur charges for calls they initiate over wireless lines and the Commission will not refund any incurred charges.

Individuals who are deaf, deafblind and hard of hearing may also follow the proceedings by first calling the Federal Relay Service at 1–800–877–8339 and providing the Service with the conference call number and conference ID number.

Members of the public are also entitled to submit written comments; the comments must be received in the regional office within 30 days following the meeting. Written comments may be emailed to Victoria Moreno at *vmoreno@usccr.gov.* All written comments received will be available to the public.

Persons who desire additional information may contact the Regional Programs Unit at (202) 809–9618. Records and documents discussed during the meeting will be available for public viewing as they become available at *www.facadatabase.gov*. Persons interested in the work of this Committee are advised to go to the Commission's website, *http://www.usccr.gov,* or may contact the Regional Programs Unit at the above email or email address.

Agenda

I. Welcome and Roll Call

II. Chair's Comments

III. Discuss Civil Rights Topics

IV. Next Steps

V. Public Comment

VI. Adjournment

Dated: July 19, 2022.

David Mussatt,

Supervisory Chief, Regional Programs Unit.

[FR Doc. 2022–15710 Filed 7–21–22; 8:45 am]

BILLING CODE P

COMMISSION ON CIVIL RIGHTS

Notice of Public Meeting of the New York Advisory Committee to the U.S. Commission on Civil Rights

AGENCY: U.S. Commission on Civil Rights.

ACTION: Notice of meeting.

SUMMARY: Notice is hereby given, pursuant to the provisions of the rules and regulations of the U.S. Commission on Civil Rights (Commission) and the Federal Advisory Committee Act, that the New York Advisory Committee (Committee) will hold web meetings via Webex at 1:00 p.m. ET on Friday, August 19, 2022, and Friday, September 16, 2022, for the purpose of discussing their project on the child welfare system in New York.

DATES: The meetings will take place from 1:00 p.m.–2:30 p.m. ET on Friday, August 19, 2022, and Friday, September 16, 2022.

—To join the meeting, please click the following link: *https://tinyurl.com/3efrtr3d*; Password: USCCR

—To join by phone only, dial: (800) 360–9505; Access Code: 2762 833 1443

FOR FURTHER INFORMATION CONTACT: Ana Fortes, DFO, at *afortes@usccr.gov* or (202) 519–2938.

SUPPLEMENTARY INFORMATION: Committee meetings are available to the public through the conference link above. Any interested member of the public may listen to the meeting. An open comment period will be provided to allow members of the public to make a statement as time allows. If joining via phone, callers can expect to incur regular charges for calls they initiate over wireless lines, according to their wireless plan. The Commission will not refund any incurred charges. Individuals who are deaf, deafblind, and hard of hearing may also follow the proceedings by first calling the Federal Relay Service at (800) 877–8339 and providing the Service with the conference details found through registering at the web link above. To request additional accommodations, please email *afortes@usccr.gov* at least ten (10) days prior to the meeting.

Members of the public are also entitled to submit written comments; the comments must be received within 30 days following the meeting. Written comments may be emailed to Liliana Schiller at *lschiller@usccr.gov*. Persons who desire additional information may contact the Regional Programs Coordination Unit at (312) 353–8311.

Records generated from this meeting may be inspected and reproduced at the Regional Programs Coordination Unit, as they become available, both before and after the meeting. Records of the meeting will be available via *www.facadatabase.gov* under the Commission on Civil Rights, New York Advisory Committee link. Persons interested in the work of this Committee are directed to the Commission's website, *http://www.usccr.gov,* or may contact the Regional Programs Coordination Unit at the above phone number.

Agenda

I. Welcome and Roll Call
II. Approval of Minutes
III. Project Discussion
IV. Public Comment
V. Next Steps
VI. Adjournment

Dated: July 18, 2022.

David Mussatt,

Supervisory Chief, Regional Programs Unit.

[FR Doc. 2022–15638 Filed 7–21–22; 8:45 am]

BILLING P

DEPARTMENT OF COMMERCE

Bureau of Industry and Security

In the Matter of: Scott Douglas Browning, 1455 H Bullard Road, Hope Mills, NC 28348–9458;

Order Denying Export Privileges

On August 9, 2019, in the U.S. District Court for the Eastern District of North Carolina, Scott Douglas Browning (''Browning'') was convicted of violating Section 38 of the Arms Export Control Act (22 U.S.C 2778) (''AECA''). Specifically, Browning was convicted of willfully exporting and causing to be exported from the United States to the Netherlands defense articles, that is, Image Intensifier Generation 3 MX–10130, Image Intensifier Generation 3 MX–10160, Image Intensifier Generation 3 MX–11769, and the BAE Systems OASYS SkeetIR Micro Thermal Imaging Monocular 640x480, which are all designated as defense articles on the United States Munitions List, without having first obtained from the Department of State a license for such export or written authorization for such export. Browning was also placed on the Department of State's debarred list. As a result of his conviction, the Court sentenced Browning to probation, $100 assessment, and $1,854,000 restitution.

Pursuant to Section 1760(e) of the Export Control Reform Act (''ECRA''),[1] the export privileges of any person who has been convicted of certain offenses, including, but not limited to, Section 38 of the AECA, may be denied for a period of up to ten (10) years from the date of his/her conviction. *See* 50 U.S.C. 4819(e). In addition, any Bureau of Industry and Security (''BIS'') licenses or other authorizations issued under ECRA, in which the person had an interest at the time of the conviction, may be revoked. *Id.*

BIS received notice of Browning's conviction for violating Section 38 of the AECA. BIS provided notice and opportunity for Browning to make a written submission to BIS, as provided in Section 766.25 of the Export Administration Regulations (''EAR'' or the ''Regulations''). 15 CFR 766.25.[2] BIS has not received a written submission from Browning.

Based upon my review of the record and consultations with BIS's Office of Exporter Services, including its Director, and the facts available to BIS, I have decided to deny Browning's export privileges under the Regulations for a period of seven years from the date of Browning's conviction. The Office of Exporter Services has also decided to revoke any BIS-issued licenses in which Browning had an interest at the time of his conviction.[3]

Accordingly, it is hereby Ordered:

First, from the date of this Order until August 9, 2026, Scott Douglas Browning, with a last known address of 1455 H Bullard Road, Hope Mills, NC 28348–9458, and when acting for or on his behalf, his successors, assigns, employees, agents or representatives (''the Denied Person''), may not directly or indirectly participate in any way in any transaction involving any commodity, software or technology (hereinafter collectively referred to as ''item'') exported or to be exported from the United States that is subject to the Regulations, including, but not limited to:

A. Applying for, obtaining, or using any license, license exception, or export control document;

[1] ECRA was enacted on August 13, 2018, as part of the John S. McCain National Defense Authorization Act for Fiscal Year 2019, and as amended is codified at 50 U.S.C. 4801–4852.

[2] The Regulations are currently codified in the Code of Federal Regulations at 15 CFR parts 730 through 774 (2022).

[3] The Director, Office of Export Enforcement, is now the authorizing official for issuance of denial orders, pursuant to recent amendments to the Regulations (85 FR 73411, November 18, 2020).

B. Carrying on negotiations concerning, or ordering, buying, receiving, using, selling, delivering, storing, disposing of, forwarding, transporting, financing, or otherwise servicing in any way, any transaction involving any item exported or to be exported from the United States that is subject to the Regulations, or engaging in any other activity subject to the Regulations; or

C. Benefitting in any way from any transaction involving any item exported or to be exported from the United States that is subject to the Regulations, or from any other activity subject to the Regulations.

Second, no person may, directly or indirectly, do any of the following:

A. Export, reexport, or transfer (in-country) to or on behalf of the Denied Person any item subject to the Regulations;

B. Take any action that facilitates the acquisition or attempted acquisition by the Denied Person of the ownership, possession, or control of any item subject to the Regulations that has been or will be exported from the United States, including financing or other support activities related to a transaction whereby the Denied Person acquires or attempts to acquire such ownership, possession or control;

C. Take any action to acquire from or to facilitate the acquisition or attempted acquisition from the Denied Person of any item subject to the Regulations that has been exported from the United States;

D. Obtain from the Denied Person in the United States any item subject to the Regulations with knowledge or reason to know that the item will be, or is intended to be, exported from the United States; or

E. Engage in any transaction to service any item subject to the Regulations that has been or will be exported from the United States and which is owned, possessed or controlled by the Denied Person, or service any item, of whatever origin, that is owned, possessed or controlled by the Denied Person if such service involves the use of any item subject to the Regulations that has been or will be exported from the United States. For purposes of this paragraph, servicing means installation, maintenance, repair, modification or testing.

Third, pursuant to Section 1760(e) of ECRA (50 U.S.C. 4819(e)) and Sections 766.23 and 766.25 of the Regulations, any other person, firm, corporation, or business organization related to Browning by ownership, control, position of responsibility, affiliation, or other connection in the conduct of trade or business may also be made subject to the provisions of this Order in order to prevent evasion of this Order.

Fourth, in accordance with Part 756 of the Regulations, Browning may file an appeal of this Order with the Under Secretary of Commerce for Industry and Security. The appeal must be filed within 45 days from the date of this Order and must comply with the provisions of Part 756 of the Regulations.

Fifth, a copy of this Order shall be delivered to Browning and shall be published in the **Federal Register**.

Sixth, this Order is effective immediately and shall remain in effect until August 9, 2026.

John Sonderman,

Director, Office of Export Enforcement.

[FR Doc. 2022–15654 Filed 7–21–22; 8:45 am]

BILLING CODE 3510–DT–P

DEPARTMENT OF COMMERCE

Bureau of Industry and Security

In the Matter of: Ismael Gomez, Jr., 1119 Galveston Street, Laredo, TX 78043;

Order Denying Export Privileges

On July 22, 2019, in the U.S. District Court for the Southern District of Texas, Ismael Gomez, Jr. (''Gomez'') was convicted of violating 18 U.S.C. 554(a). Specifically, Gomez was convicted of fraudulently and knowingly exporting and sending or attempting to export and send from the United States to Mexico, one thousand and ten (1,010) rounds of .223 caliber ammunition, in violation of 18 U.S.C. 554. As a result of his conviction, the Court sentenced Gomez to 46 months in prison, three years supervised release, and a $100 assessment.

Pursuant to Section 1760(e) of the Export Control Reform Act (''ECRA''),[1] the export privileges of any person who has been convicted of certain offenses, including, but not limited to, 18 U.S.C. 554, may be denied for a period of up to ten (10) years from the date of his/her conviction. 50 U.S.C. 4819(e). In addition, any Bureau of Industry and Security (''BIS'') licenses or other authorizations issued under ECRA, in which the person had an interest at the time of the conviction, may be revoked. *Id.*

BIS received notice of Gomez's conviction for violating 18 U.S.C. 554. As provided in Section 766.25 of the Export Administration Regulations (''EAR'' or the ''Regulations''), BIS provided notice and opportunity for Gomez to make a written submission to BIS. 15 CFR 766.25.[2] BIS has not received a written submission from Gomez.

Based upon my review of the record and consultations with BIS's Office of Exporter Services, including its Director, and the facts available to BIS, I have decided to deny Gomez's export privileges under the Regulations for a period of 10 years from the date of Gomez's conviction. The Office of Exporter Services has also decided to revoke any BIS-issued licenses in which Gomez had an interest at the time of his conviction.[3]

Accordingly, it is hereby Ordered:

First, from the date of this Order until July 22, 2029, Ismael Gomez, Jr., with a last known address of 1119 Galveston Street, Laredo, TX 78043, and when acting for or on his behalf, his successors, assigns, employees, agents or representatives (''the Denied Person''), may not directly or indirectly participate in any way in any transaction involving any commodity, software or technology (hereinafter collectively referred to as ''item'') exported or to be exported from the United States that is subject to the Regulations, including, but not limited to:

A. Applying for, obtaining, or using any license, license exception, or export control document;

B. Carrying on negotiations concerning, or ordering, buying, receiving, using, selling, delivering, storing, disposing of, forwarding, transporting, financing, or otherwise servicing in any way, any transaction involving any item exported or to be exported from the United States that is subject to the Regulations, or engaging in any other activity subject to the Regulations; or

C. Benefitting in any way from any transaction involving any item exported or to be exported from the United States that is subject to the Regulations, or from any other activity subject to the Regulations.

Second, no person may, directly or indirectly, do any of the following:

A. Export, reexport, or transfer (in-country) to or on behalf of the Denied

---

[1] ECRA was enacted on August 13, 2018, as part of the John S. McCain National Defense Authorization Act for Fiscal Year 2019, and as amended is codified at 50 U.S.C. 4801–4852.

[2] The Regulations are currently codified in the Code of Federal Regulations at 15 CFR parts 730 through 774 (2022).

[3] The Director, Office of Export Enforcement, is the authorizing official for issuance of denial orders pursuant to recent amendments to the Regulations (85 FR 73411, November 18, 2020).

Person any item subject to the Regulations;

B. Take any action that facilitates the acquisition or attempted acquisition by the Denied Person of the ownership, possession, or control of any item subject to the Regulations that has been or will be exported from the United States, including financing or other support activities related to a transaction whereby the Denied Person acquires or attempts to acquire such ownership, possession or control;

C. Take any action to acquire from or to facilitate the acquisition or attempted acquisition from the Denied Person of any item subject to the Regulations that has been exported from the United States;

D. Obtain from the Denied Person in the United States any item subject to the Regulations with knowledge or reason to know that the item will be, or is intended to be, exported from the United States; or

E. Engage in any transaction to service any item subject to the Regulations that has been or will be exported from the United States and which is owned, possessed or controlled by the Denied Person, or service any item, of whatever origin, that is owned, possessed or controlled by the Denied Person if such service involves the use of any item subject to the Regulations that has been or will be exported from the United States. For purposes of this paragraph, servicing means installation, maintenance, repair, modification or testing.

Third, pursuant to Section 1760(e) of ECRA and Sections 766.23 and 766.25 of the Regulations, any other person, firm, corporation, or business organization related to Gomez by ownership, control, position of responsibility, affiliation, or other connection in the conduct of trade or business may also be made subject to the provisions of this Order in order to prevent evasion of this Order.

Fourth, in accordance with Part 756 of the Regulations, Gomez may file an appeal of this Order with the Under Secretary of Commerce for Industry and Security. The appeal must be filed within 45 days from the date of this Order and must comply with the provisions of Part 756 of the Regulations.

Fifth, a copy of this Order shall be delivered to Gomez and shall be published in the **Federal Register**.

Sixth, this Order is effective immediately and shall remain in effect until July 22, 2029.

John Sonderman,

Director, Office of Export Enforcement.

[FR Doc. 2022–15653 Filed 7–21–22; 8:45 am]

BILLING CODE 3510–DT–P

DEPARTMENT OF COMMERCE

International Trade Administration

[A–301–803]

Citric Acid and Certain Citrate Salts From Colombia: Preliminary Results of Antidumping Duty Administrative Review; 2020–2021

AGENCY: Enforcement and Compliance, International Trade Administration, Department of Commerce.

SUMMARY: The U.S. Department of Commerce (Commerce) preliminarily determines that Sucroal S.A. (Sucroal) sold subject merchandise in the United States at prices below normal value during the July 1, 2020, through June 30, 2021, period of review (POR). We invite interested parties to comment on these preliminary results.

DATES: Applicable July 22, 2022.

FOR FURTHER INFORMATION CONTACT: David Lindgren, AD/CVD Operations, Office III, Enforcement and Compliance, International Trade Administration, U.S. Department of Commerce, 1401 Constitution Avenue NW, Washington, DC 20230; telephone: (202) 482–1671.

SUPPLEMENTARY INFORMATION:

Background

On July 25, 2018, Commerce published the antidumping duty (AD) order on citric acid and certain citrate salts (citric acid) from Colombia in the **Federal Register**.[1] On September 7, 2021, pursuant to section 751(a)(1) of the Tariff Act of 1930, as amended (the Act), Commerce initiated an AD administrative review of the *Order.*[2] During the course of this administrative review, Sucroal responded to Commerce's initial questionnaire and supplemental questionnaires. On March 4, 2022, Commerce extended the deadline for issuing the preliminary results of this review.[3] For further details, *see* the accompanying Preliminary Decision Memorandum.[4]

Scope of the Order

The merchandise covered by this *Order* includes all grades and granulation sizes of citric acid, sodium citrate, and potassium citrate in their unblended forms, whether dry or in solution, and regardless of packaging type. For a full description of the scope of the *Order, see* the Preliminary Decision Memorandum.[5]

Methodology

Commerce is conducting this review in accordance with section 751(a) of the Act. Export price has been calculated in accordance with section 772 of the Act, and normal value was calculated in accordance with section 773 of the Act. For a full description of the methodology underlying our conclusions, *see* the Preliminary Decision Memorandum. A list of the topics discussed in the Preliminary Decision Memorandum is attached as an appendix to this notice. The Preliminary Decision Memorandum is a public document and is on file electronically via Enforcement and Compliance's Antidumping and Countervailing Duty Centralized Electronic Service System (ACCESS). ACCESS is available to registered users at *https://access.trade.gov.* In addition, a complete version of the Preliminary Decision Memorandum can be accessed directly at *https://access.trade.gov/public/FRNoticesListLayout.aspx.*

Preliminary Results of the Review

Commerce preliminarily determines that the following weighted-average dumping margin exists for the period July 1, 2020, through June 30, 2021:

Exporter/producer	Estimated weighted-average dumping margin (percent)
Sucroal S.A	1.14

Disclosure and Public Comment

Commerce intends to disclose the calculations performed in these preliminary results to parties in this proceeding within five days of the date of publication of this notice.[6] Pursuant

[1] *See Citric Acid and Certain Citrate Salts from Belgium, Colombia and Thailand: Antidumping Duty Orders,* 83 FR 35214 (July 25, 2018) (*Order*).

[2] *See Initiation of Antidumping and Countervailing Duty Administrative Reviews,* 86 FR 50034 (September 7, 2021).

[3] *See* Memorandum, ''Extension of Deadline for Preliminary Results,'' dated March 4, 2022.

[4] *See* Memorandum, ''Decision Memorandum for the Preliminary Results of the Antidumping Duty Administrative Review: Citric Acid and Certain Citrate Salts from Colombia; 2020–2021,'' dated concurrently with, and hereby adopted by, this notice (Preliminary Decision Memorandum).

[5] *Id.*

[6] *See* 19 CFR 351.224(b).

to 19 CFR 351.309(c), interested parties may submit case briefs not later than 30 days after the date of publication of this notice. Rebuttal briefs, limited to issues raised in the case briefs, may be filed no later than seven days after the date for filing case briefs.[7] Parties who submit case briefs or rebuttal briefs in this proceeding are requested to submit with each argument: (1) a statement of the issue, (2) a brief summary of the argument, and (3) a table of authorities.[8] Executive summaries should be limited to five pages total, including footnotes. Case and rebuttal briefs should be filed using ACCESS[9] and must be served on interested parties.[10]

Pursuant to 19 CFR 351.310(c), interested parties who wish to request a hearing must submit a written request to the Assistant Secretary for Enforcement and Compliance, filed electronically via ACCESS. An electronically-filed request must be received successfully in its entirely by 5:00 p.m. Eastern Time within 30 days of the date of publication of this notice in the **Federal Register**.[11] Requests should contain: (1) the party's name, address, and telephone number; (2) the number of participants; and (3) a list of the issues to be discussed. If a request for a hearing is made, Commerce intends to hold the hearing at a time and date to be determined.[12] Parties should confirm the date, time and location of the hearing by telephone two days before the scheduled date.

Commerce intends to issue the final results of this administrative review, including the results of our analysis of the issues raised in any the written briefs, no later than 120 days after the date of publication of this notice, unless otherwise extended, pursuant to 751(a)(3)(A) of the Act.

Assessment Rates

Upon completion of the administrative review, Commerce shall determine, and U.S. Customs and Border Protection (CBP) shall assess, antidumping duties on all appropriate entries. If the weighted-average dumping margin for Sucroal (*i.e.,* the sole individually-examined respondent in this review) is not zero or *de minimis* (*i.e.,* greater than or equal to 0.5 percent) in the final results of this review, we will calculate importer-specific *ad valorem* assessment rates for the merchandise based on the ratio of the total amount of dumping calculated for the examined sales made during the POR to each importer and the total entered value of those same sales, in accordance with 19 CFR 351.212(b)(1). Where an importer-specific *ad valorem* assessment rate is zero or *de minimis* in the final results of the review, we will instruct CBP to liquidate the appropriate entries without regard to antidumping duties.[13] If a respondent's weighted-average dumping margin is zero or *de minimis* in the final results of the review, we will instruct CBP not to assess duties on any of its entries in accordance with the *Final Modification for Reviews, i.e.,* ''{w}here the weighted-average margin of dumping for the exporter is determined to be zero or *de minimis,* no antidumping duties will be assessed.''[14]

For entries of subject merchandise during the POR produced by Sucroal for which the producer did not know its merchandise was destined for the United States, we will instruct CBP to liquidate unreviewed entries at the all-others rate if there is no rate for the intermediate company (or companies) involved in the transaction.[15]

Commerce intends to issue assessment instructions to CBP no earlier than 35 days after the date of publication of the final results of this review in the **Federal Register**. If a timely summons is filed at the U.S. Court of International Trade, the assessment instructions will direct CBP not to liquidate relevant entries until the time for parties to file a request for a statutory injunction has expired (*i.e.,* within 90 days of publication).

Cash Deposit Requirements

The following cash deposit requirements will be effective upon publication of the final results of this administrative review for all shipments of the subject merchandise entered, or withdrawn from warehouse, for consumption on or after the publication date of the final results of this administrative review, as provided by section 751(a)(2)(C) of the Act: (1) the cash deposit rate for Sucroal will be equal to the weighted-average dumping margin established in the final results of this administrative review, except if the rate is less than 0.50 percent, and therefore, *de minimis* within the meaning of 19 CFR 351.106(c)(1), in which case the cash deposit rate will be zero; (2) for previously reviewed or investigated companies not listed above, the cash deposit rate will continue to be the company-specific rate published for the most recently completed segment of this proceeding in which the company participated; (3) if the exporter is not a firm covered in this review, a prior review, or in the investigation but the producer is, the cash deposit rate will be the rate established for the most recently completed segment of this proceeding for the producer of the merchandise; and (4) the cash deposit rate for all other producers or exporters will continue to be the all-others rate of 28.48 percent, the rate established in the investigation of this proceeding.[16] These cash deposit requirements, when imposed, shall remain in effect until further notice.

Notification to Importers

This notice serves as a preliminary reminder to importers of their responsibility under 19 CFR 351.402(f)(2) to file a certificate regarding the reimbursement of antidumping duties prior to liquidation of the relevant entries during this review period. Failure to comply with this requirement could result in Commerce's presumption that reimbursement of antidumping duties occurred and the subsequent assessment of double antidumping duties.

Notification to Interested Parties

We are issuing and publishing these preliminary results in accordance with sections 751(a)(1) and 777(i) of the Act, and 19 CFR 351.213(h)(1).

Dated: July 15, 2022.

Lisa W. Wang,

Assistant Secretary for Enforcement and Compliance.

Appendix

List of Topics Discussed in the Preliminary Decision Memorandum

I. Summary
II. Background
III. Scope of the *Order*
IV. Discussion of the Methodology
V. Recommendation

[FR Doc. 2022–15624 Filed 7–21–22; 8:45 am]

BILLING CODE 3510–DS–P

[7] *See* 19 CFR 351.309(d); *see also Temporary Rule Modifying AD/CVD Service Requirements Due to COVID–19; Extension of Effective Period,* 85 FR 41363 (July 10, 2020).

[8] *See* 19 CFR 351.309(c)(2) and (d)(2).

[9] *See generally* 19 CFR 351.303.

[10] *See* 19 CFR 351.303(f).

[11] *See* 19 CFR 351.310(c).

[12] *See* 19 CFR 351.310(d).

[13] *See* 19 CFR 351.106(c)(2).

[14] *See Antidumping Proceedings: Calculation of the Weighted-Average Dumping Margin and Assessment Rate in Certain Antidumping Proceedings; Final Modification,* 77 FR 8101, 8102 (February 14, 2012) (*Final Modification for Reviews*).

[15] *See Antidumping and Countervailing Duty Proceedings: Assessment of Antidumping Duties,* 68 FR 23954 (May 6, 2003).

[16] *See Order,* 83 FR at 35215.

DEPARTMENT OF COMMERCE

International Trade Administration

[A–201–847]

Heavy Walled Rectangular Welded Steel Pipes and Tubes From Mexico: Notice of Court Decision Not in Harmony With the Results of Antidumping Administrative Review; Notice of Amended Final Results

AGENCY: Enforcement and Compliance, International Trade Administration, Department of Commerce.

SUMMARY: On July 6, 2022, the U.S. Court of International Trade (CIT) issued its final judgment in *Productos Laminados de Monterrey S.A. de C.V.* v. *United States,* Court No. 20–00166, sustaining the U.S. Department of Commerce's (Commerce) remand results pertaining to the administrative review of the antidumping duty (AD) order on heavy walled rectangular welded steel pipes and tubes (HWR pipes and tubes) from Mexico covering the period September 1, 2017, through August 31, 2018. Commerce is notifying the public that the CIT's final judgment is not in harmony with Commerce's final results of the administrative review and that Commerce is amending the final results with respect to the dumping margin assigned to Productos Laminados de Monterrey S.A. de C.V. (Prolamsa).

DATES: Applicable July 16, 2022.

FOR FURTHER INFORMATION CONTACT: David Crespo, AD/CVD Operations, Office II, Enforcement and Compliance, International Trade Administration, U.S. Department of Commerce, 1401 Constitution Avenue NW, Washington, DC 20230; telephone: (202) 482–3693.

SUPPLEMENTARY INFORMATION:

Background

On July 13, 2020, Commerce published its *Final Results.*[1] In the *Final Results,* we rejected Prolamsa's claim that it sold HWR pipes and tubes in the home market (HM) at two levels of trade (LOT) and found that Prolamsa failed to adequately support its claims with quantitative evidence. We further stated that the burden was on Prolamsa to establish its eligibility for an LOT adjustment.[2] For these reasons, we found that all sales in the HM were at a single LOT and, thus, denied an LOT adjustment for Prolamsa.

Prolamsa appealed Commerce's *Final Results.* On December 17, 2021, the CIT remanded the *Final Results* to Commerce to reconsider Commerce's finding that Prolamsa made HM sales at one LOT and, thus, was not entitled to an LOT adjustment.[3] Specifically, the CIT held that Commerce's final LOT determination was based on findings that were either: (1) not supported by substantial evidence on the record; or (2) vague and conclusory.[4] In the *Final Remand,* issued in April 2022, Commerce reconsidered the facts on the record and found that Prolamsa made its HM sales at two LOTs.[5] On July 6, 2022, the CIT sustained Commerce's *Final Remand.*[6]

Timken Notice

In its decision in *Timken,*[7] as clarified by *Diamond Sawblades,*[8] the U.S. Court of Appeals for the Federal Circuit held that, pursuant to section 516A(c) and (e) of the Act, Commerce must publish a notice of court decision that is not ''in harmony'' with a Commerce determination and suspend liquidation of entries pending a ''conclusive'' court decision. The CIT's July 6, 2022, judgment constitutes a final decision of the CIT that is not in harmony with Commerce's *Final Results.* Thus, this notice is published in fulfillment of the publication requirements of *Timken.*

Amended Final Results

Because there is now a final court judgment, Commerce is amending its *Final Results* with respect to Prolamsa as follows:

Producer/exporter	Weighted-average dumping margin (percent)
Productos Laminados de Monterrey S.A. de C.V	0.89

Cash Deposit Requirements

Because Prolamsa has a superseding cash deposit rate, *i.e.,* there have been final results published in a subsequent administrative review, we will not issue revised cash deposit instructions to U.S. Customs and Border Protection (CBP). This notice will not affect the current cash deposit rate.

Liquidation of Suspended Entries

At this time, Commerce remains enjoined by CIT order from liquidating entries that were produced and/or exported by Prolamsa and were entered, or withdrawn from warehouse, for consumption during the period September 1, 2017, through August 31, 2018. These entries will remain enjoined pursuant to the terms of the injunction during the pendency of any appeals process.

In the event that the CIT's ruling is not appealed, or, if appealed, upheld by a final and conclusive court decision, Commerce intends to instruct CBP to assess antidumping duties on unliquidated entries of subject merchandise produced and/or exported by Prolamsa in accordance with 19 CFR 351.212(b). We will instruct CBP to assess antidumping duties on all appropriate entries covered by this review when the importer-specific *ad valorem* assessment rate is not zero or *de minimis.* Where an importer-specific *ad valorem* assessment rate is zero or *de minimis,*[9] we will instruct CBP to liquidate the appropriate entries without regard to antidumping duties.

Notification to Interested Parties

This notice is issued and published in accordance with sections 516A(c) and (e) and 777(i)(1) of the Act.

Dated: July 18, 2022.

Lisa W. Wang,

Assistant Secretary for Enforcement and Compliance.

[FR Doc. 2022–15723 Filed 7–21–22; 8:45 am]

BILLING CODE 3510–DS–P

[1] *See Heavy Walled Rectangular Welded Carbon Steel Pipes and Tubes from Mexico: Final Results of Antidumping Duty Administrative Review and Final Determination of No Shipments; 2017–2018,* 85 FR 41962 (July 13, 2020) (*Final Results*), and accompanying Issues and Decision Memorandum (IDM).

[2] *Id.* at Comment 7.

[3] *See Productos Laminados de Monterrey S.A. de C.V.* v. *United States,* 554 F. Supp. 3d 1355 (CIT 2021).

[4] *Id.*

[5] *See Final Results of Redetermination Pursuant to Court Remand, Productos Laminados de Monterrey S.A. de C.V.* v. *United States,* 554 F. Supp. 3d 1355 (CIT 2021), dated April 7, 2022 (*Final Remand*).

[6] *See Productos Laminados de Monterrey S.A. de C.V.* v. *United States,* Ct. No. 20–00166, Slip Op. 22–77 (CIT July 6, 2022).

[7] *See Timken Co.* v. *United States,* 893 F.2d 337 (Fed. Cir. 1990) (*Timken*).

[8] *See Diamond Sawblades Mfrs. Coal.* v. *United States,* 626 F.3d 1374 (Fed. Cir. 2010) (*Diamond Sawblades*).

[9] *See* 19 CFR 351.106(c)(2).

DEPARTMENT OF COMMERCE

National Oceanic and Atmospheric Administration

[RTID 0648–XC182]

Fisheries of the South Atlantic; South Atlantic Fishery Management Council; Public Meeting

AGENCY: National Marine Fisheries Service (NMFS), National Oceanic and Atmospheric Administration (NOAA), Commerce.

ACTION: Notice of a joint public meeting.

SUMMARY: The South Atlantic Fishery Management Council (Council) will hold a meeting involving advisory panel (AP) chairs, vice chairs, and other representatives to provide input on the draft Comprehensive Acceptable Biological Catch (ABC) Control Rule Amendment.

DATES: The meeting will be held via webinar on August 10, 2022, from 9 a.m. until 12 p.m., EDT.

ADDRESSES:

Meeting address: The meeting will be held via webinar. The webinar is open to members of the public. Registration is required. Webinar registration, an online public comment form, and briefing book materials will be available one week prior to the meeting at: *https://safmc.net/advisory-council-meetings/.*

Council address: South Atlantic Fishery Management Council, 4055 Faber Place Drive, Suite 201, N Charleston, SC 29405.

FOR FURTHER INFORMATION CONTACT: Kim Iverson, Public Information Officer, SAFMC; phone: (843) 571–4366 or toll free: (866) SAFMC–10; fax: (843) 769–4520; email: *kim.iverson@safmc.net.*

SUPPLEMENTARY INFORMATION: The ABC Control Rule Amendment considers revisions to the ABC control rule for the Dolphin Wahoo, Golden Crab, and Snapper Grouper Fishery Management Plans. These revisions include changes to the structure of the control rule in how risk and uncertainty components are handled, allowance of phasing in ABC changes over multiple years, and allowance for unharvested portions of annual catch limits (ACL) to be carried over to increase ACL in the following year. The AP representatives will discuss each of these actions, providing comments and recommendations for the Council's consideration.

Special Accommodations

The meeting is physically accessible to people with disabilities. Requests for auxiliary aids should be directed to the Council office (see **ADDRESSES**) 5 days prior to the meeting.

Note: The times and sequence specified in this agenda are subject to change.

Authority: 16 U.S.C. 1801 *et seq.*

Dated: July 18, 2022.

Rey Israel Marquez,

Acting Deputy Director, Office of Sustainable Fisheries, National Marine Fisheries Service.

[FR Doc. 2022–15641 Filed 7–21–22; 8:45 am]

BILLING CODE 3510–22–P

DEPARTMENT OF COMMERCE

National Oceanic and Atmospheric Administration

[RTID 0648–XC194]

Mid-Atlantic Fishery Management Council (MAFMC); Public Meetings

AGENCY: National Marine Fisheries Service (NMFS), National Oceanic and Atmospheric Administration (NOAA), Commerce.

ACTION: Notice of public meetings.

SUMMARY: The Mid-Atlantic Fishery Management Council (Council) will hold public meetings of the Council including joint sessions with the Atlantic States Marine Fisheries Commission's Bluefish and Summer Flounder, Scup, and Black Sea Bass Management Boards.

DATES: The meetings will be held Monday, August 8 through Thursday, August 11, 2022. For agenda details, see **SUPPLEMENTARY INFORMATION**.

ADDRESSES:

Meeting address: The meeting will be held at The Notary Hotel (21 N. Juniper Street, Philadelphia, PA 19107); telephone: (215) 496–3200.

This meeting will be conducted in a hybrid format, with options for both in person and webinar participation. Webinar registration details will be available on the Council's website at *https://www.mafmc.org/briefing/august-2022.*

Council address: Mid-Atlantic Fishery Management Council, 800 N. State St., Suite 201, Dover, DE 19901; telephone: (302) 674–2331; *www.mafmc.org.*

FOR FURTHER INFORMATION CONTACT: Christopher M. Moore, Ph.D., Executive Director, Mid-Atlantic Fishery Management Council; telephone: (302) 526–5255. The Council's website, *www.mafmc.org* also has details on the meeting location, proposed agenda, webinar listen-in access, and briefing materials.

SUPPLEMENTARY INFORMATION: The following items are on the agenda, although agenda items may be addressed out of order (changes will be noted on the Council's website when possible.)

Monday, August 8, 2022

Council Meeting With the ASMFC Bluefish Management Board

Bluefish 2023 Specifications

Review recommendations from the Scientific and Statistical Committee (SSC), Monitoring Committee, Advisory Panel, and staff

Review previously adopted commercial and recreational catch and landings limits for 2023 and review as necessary

Review and review 2023 commercial and recreational measures if needed

ASMFC Bluefish Board Only

Tuesday, August 9, 2022

Council Meeting With the ASMFC Summer Flounder, Scup, and Black Sea Bass Management Board

EAFM Recreational Summer Flounder Management Strategy Evaluation

Review MSE model results and work group recommendations

Provide feedback and direction for potential application of MSE results

Summer Flounder 2023 Specifications

Review recommendations from the SSC, Monitoring Committee, Advisory Panel, and staff

Review previously adopted commercial and recreational catch and landings limits for 2023 and revise as necessary

Review and revise 2023 commercial measures if needed

Scup 2023 Specifications

Review recommendations from the SSC, Monitoring Committee, Advisory Panel, and staff

Review previously adopted commercial and recreational catch and landings limits for 2023 and revise as necessary

Review and revise 2023 commercial measures if needed

Black Sea Bass 2023 Specifications

Review recommendations from the SSC, Monitoring Committee, Advisory Panel, and staff

Review previously adopted commercial and recreational catch and landings limits for 2023 and revise as necessary

Review and revise 2023 commercial measures if needed

ASMFC Summer Flounder, Scup, Black Sea Bass Board Only

Wednesday, August 10, 2022

BOEM Guidance for Mitigating Impact of Offshore Wind Energy Projects on Commercial and Recreational Fisheries

Review draft guidance and discuss Council comments

Community Offshore Wind Project (lease OCS–A–0539 off New Jersey)

Presentation by RWE representatives

East Coast Climate Change Scenario Planning

Update on draft scenarios and next steps

Ecosystem and Ocean Planning (EOP) Committee Report

Report on EOP Committee and Advisory Panel meeting on potential designation of Hudson Canyon National Marine Sanctuary

Update on New England Fishery Management Council Activities Affecting Mid-Atlantic

Monkfish specifications update
Potential winter flounder accountability measures for squid fishery
New England response to Sturgeon Draft Action Plan
Next steps regarding SCOQ Nantucket Shoals Habitat Management Area

Butterfish 2023–2024 Specifications

Review recommendations from the Advisory Panel, SSC, and staff
Approve 2023–2024 specifications

Report on Illex Squid Research Track Assessment Process

Review report from Consensus Building Institute (CBI)
Discussion and recommendations on next steps

Illex Preliminary 2023 Specifications

Review recommendations from the Advisory Panel, SSC, and staff
Approve preliminary 2023 specifications

Update on Illex Permit Amendment (Amendment 22 to the Mackerel, Squid, Butterfish FMP)

Overview of alternatives that were selected as preferred at final action
Update on current status of NMFS rulemaking

Acknowledgement of Outgoing Council Members

Thursday, August 11, 2022

Swearing In of New and Reappointed Council Members

Election of Officers
Business Session

Committee Reports (SSC); Executive Director's Report; Organization Reports; and Liaison Reports

Other Business and General Public Comment

Although non-emergency issues not contained in this agenda may come before this group for discussion, in accordance with the Magnuson-Stevens Fishery Conservation and Management Act (Magnuson-Stevens Act), those issues may not be the subject of formal action during these meetings. Actions will be restricted to those issues specifically identified in this notice and any issues arising after publication of this notice that require emergency action under Section 305(c).

Special Accommodations

These meetings are physically accessible to people with disabilities. Requests for sign language interpretation or other auxiliary aid should be directed to Shelley Spedden, (302) 526–5251, at least 5 days prior to the meeting date.

Authority: 16 U.S.C. 1801 *et seq.*

Dated: July 18, 2022.

Rey Israel Marquez,

Acting Deputy Director, Office of Sustainable Fisheries, National Marine Fisheries Service.

[FR Doc. 2022–15643 Filed 7–21–22; 8:45 am]

BILLING CODE 3510–22–P

DEPARTMENT OF COMMERCE

National Oceanic and Atmospheric Administration

Draft Revised Management Plan for the He'eia National Estuarine Research Reserve

AGENCY: Office for Coastal Management, National Ocean Service, National Oceanic and Atmospheric Administration, U.S. Department of Commerce.

ACTION: Request for comments on draft revised management plan.

SUMMARY: The National Oceanic and Atmospheric Administration (NOAA) is soliciting comments from the public regarding a proposed revision of the management plan for the He'eia National Estuarine Research Reserve. A management plan provides a framework for the direction and timing of a reserve's programs; allows reserve managers to assess a reserve's success in meeting its goals and to identify any necessary changes in direction; and is used to guide programmatic evaluations of the reserve. Plan revisions are required at least every five years. This revised plan is intended to replace the plan approved in 2016.

DATES: Comments must be received at the appropriate address (see **ADDRESSES**) on or before 30 days after the publication date of the **Federal Register** Notice.

ADDRESSES: The draft revised management plan can be downloaded or viewed at: *https://heeianerr.org/request-for-comments-on-draft-revised-management-plan/*. The document is also available by sending a written request to the point of contact identified below (see **FOR FURTHER INFORMATION CONTACT**).

You may submit comments by:

Electronic Submission: Submit all electronic public comments by email to *jean.tanimoto@noaa.gov*. Include ''Comments on Draft He'eia National Estuarine Research Reserve Management Plan'' in the subject line of the message.

FOR FURTHER INFORMATION CONTACT: Jean Tanimoto of NOAA's Office for Coastal Management by email at *jean.tanimoto@noaa.gov,* phone at (808) 725–5253, or mail—1845 Wasp Blvd., Bldg 176 Honolulu, HI 96816.

SUPPLEMENTARY INFORMATION: Pursuant to 15 CFR 921.33(c), a State must revise the management plan for the research reserve at least every five years. If approved by NOAA, the He'eia National Estuarine Research Reserve's revised plan will replace the plan previously approved in 2016.

A management plan outlines the reserve's strategic goals and objectives; administrative structure; programs for conducting research and monitoring, education, and training; programs that address resource protection and restoration; public access and visitor use plans; consideration for future land acquisition; and facility development.

This draft revised management plan is a minor update of the prior plan, and maintains a strong foundation that honors the past by using indigenous resource management practices to support the sustainable co-management of the He'eia estuary. Core to the plan is the *ahupua'a*—the Hawaiian conceptualization of community that extends from mountain to oceans; and *'āina momona*—using indigenous approaches to manage resources toward a state of sustainable abundance. Changes outlined in the plan relate to updated strategies and goals for the reserve's education, research, stewardship, and coastal training programs; staffing and organizational needs; and planned facilities and infrastructure development.

Since its designation in 2016, this reserve has supported community-led ahupua'a scale restoration in the He'eia estuary with the removal of 20 acres (80,000 square meters) of invasive mangroves and plants replacing them with native plant species; agroforestry and lo'i cultivation; produced publications on Native Hawaiian land and sea management practices; and restored the He'eia fishpond. As a newly established reserve, the reserve hired a staff team consisting of a reserve manager, research coordinator, education coordinator, coastal training program coordinator, and research technician. These staff play an important role in building community-

supported education, research, stewardship, and training programming across the He'eia community. The reserve also installed and launched monitoring equipment across the ahupua'a to monitor water quality and abiotic and biotic features and changes related to sea level rise and coastal inundation; completed needs assessments for education and training needs in He'eia; and supported various graduate assistants, fellows, and research interns. The revised management plan, once approved, would serve as the guiding document for the 1,385-acre (5.6 square kilometers) research reserve for the next five years.

NOAA's Office for Coastal Management analyzes the environmental impacts of the proposed approval of this draft revised management plan in accordance with section 102(2)(C) of the National Environmental Policy Act of 1969, as amended, 42 U.S.C. 4332(2)(C), and the Council on Environmental Quality Regulations for Implementing the Procedural Provisions of NEPA (40 CFR 1500 through 1508). The public is invited to comment on the draft revised management plan. NOAA will take these comments into consideration in deciding whether to approve the draft revised management plan in whole or in part.

(Authority: 16 U.S.C. 1451 *et seq.;* 15 CFR 921.33)

Keelin S. Kuipers,

Deputy Director, Office for Coastal Management, National Ocean Service, National Oceanic and Atmospheric Administration.

[FR Doc. 2022–15709 Filed 7–21–22; 8:45 am]

BILLING CODE 3510–NK–P

DEPARTMENT OF COMMERCE

National Oceanic and Atmospheric Administration

[RTID 0648–XC190]

Caribbean Fishery Management Council; Public Meeting

AGENCY: National Marine Fisheries Service (NMFS), National Oceanic and Atmospheric Administration (NOAA), Commerce.

ACTION: Notice of public hybrid meeting (in-person/virtual hybrid).

SUMMARY: The Caribbean Fishery Management Council (CFMC) will hold the 179th public hybrid meeting to address the items contained in the tentative agenda included in the **SUPPLEMENTARY INFORMATION**.

DATES: The 179th CFMC public hybrid meeting will be held on August 11, 2022, from 9 a.m. to 4:30 p.m., and on August 12, 2022, from 9 a.m. to 4 p.m., AST.

ADDRESSES:

Meeting address: The meeting will be held at the Courtyard by Marriott Isla Verde Beach Resort, 7012 Boca de Cangrejos Avenue, Carolina, Puerto Rico 00979.

You may join the 179th CFMC public hybrid meeting via Zoom, from a computer, tablet or smartphone by entering the following address:

Join Zoom Meeting
https://us02web.zoom.us/j/83060685915?pwd=VmVsc1orSUtKck8xYk1XOXNDY1ErZz09
Meeting ID: 830 6068 5915
Passcode: 995658
One tap mobile
+17879451488,,83060685915#,,,,,,0#,,995658# Puerto Rico
+17879667727,,83060685915#,,,,,,0#,,995658# Puerto Rico
Dial by your location
+1 787 945 1488 Puerto Rico
+1 787 966 7727 Puerto Rico
+1 939 945 0244 Puerto Rico
Meeting ID: 830 6068 5915
Passcode: 995658

In case there are problems and we cannot reconnect via Zoom, the meeting will continue using GoToMeeting.

You can join the meeting from your computer, tablet or smartphone. *https://global.gotomeeting.com/join/971749317.* You can also dial in using your phone. United States: +1 (408) 650–3123 Access Code: 971–749–317.

FOR FURTHER INFORMATION CONTACT: Miguel A. Rolón, Executive Director, Caribbean Fishery Management Council, 270 Muñoz Rivera Avenue, Suite 401, San Juan, Puerto Rico 00918–1903, telephone: (787) 398–3717.

SUPPLEMENTARY INFORMATION: The following items included in the tentative agenda will be discussed:

August 11, 2022

9 a.m.–10 a.m.

—Call to Order
—Roll Call
—Swearing in New Council Member
—Election of Officials
—Adoption of Agenda
—Consideration of 178th Council Meeting Verbatim Transcriptions
—Executive Director's Report

10 a.m.–12 p.m.

—Puerto Rico Spiny Lobster Accountability Measure (AM) Application Discussion—NOAA Fisheries
—Island-based Fishery Management Plans ([IBFMPs]/Regulations and Amendments Update—María López-Mercer and Sarah Stephenson, NOAA Fisheries
—Potential Actions for IBFMPs Amendments:
  —Federal Permits for CFMC Fisheries—Maria Lopez, NOAA Fisheries
  —Pelagic Species Management, Options Paper—Sarah Stephenson, NOAA Fisheries

12 p.m.–1 p.m.

—Lunch

1 p.m.–2:30 p.m.

—Scientific and Statistical Committee (SSC) Report—Richard Appeldoorn, SSC Chair
—NOAA Fisheries Southeast Fisheries Science Center (SEFSC) Update—Kevin McCarthy, NOAA Fisheries
—Ecosystem-Based Fishery Management Technical Advisory Panel (EBFM TAP) Report—Sennai Habtes, EBFMTAP Chair
—Report on July 20, 2022, District Advisory Panels (DAPs) Meeting on Deep-Water Reef Fish Fishing—Marcos Hanke, CFMC, and DAP Chairs

2:30 p.m.–3:30 p.m.

—Descending Devices in Caribbean Fisheries—Marcos Hanke, CFMC
—Nassau Grouper Kits
—U.S.V.I. Fish Traps Reduction Plan and Possible Compatibility in EEZ—Carlos Farchette

3:30 p.m.–3:45 p.m.

—Break

3:45 p.m.–4:30 p.m.

—NOAA Fisheries Draft Strategy for Advancing Equity and Environmental Justice (EEJ)—Heather Blough and Brent Stoffle, NOAA Fisheries
—Public Comment Period (5-Minute Presentations)

4:30 p.m.

—Adjourn for the day

4:30 p.m.–5 p.m.

—Closed Session

August 12, 2022

9 a.m.–9:30 a.m.

—Western Central Atlantic Fishery Commission (WECAFC) 18th Session Update—Laura Cimo, NOAA Fisheries
—WECAFC Spawning Aggregations Working Group, Big Fish Campaign—Ana Salceda

9:30 a.m.–9:45 a.m.

—NOAA Fisheries Protected Resources Update—NOAA Fisheries/SERO Staff

9:45 a.m.–10:45 a.m.

—Outreach and Education Report—Alida Ortiz, OEAP Chair
—Social Media Report—Cristina Olán, CFMC

10:45 a.m.–11 a.m.

—Break

11 a.m.–11:15 a.m.

—Gliders, Sail Drones and Autonomous Oceanographic Observations in the U.S. Caribbean—Patricia Chardón, Caribbean Coastal Ocean Observing System (CARICOOS)

11:15 a.m.–12 p.m.

—Liaison Officers Reports (15 minutes each)
  —St. Croix, U.S.V.I.—Mavel Maldonado,
  —St. Thomas/St. John, U.S.V.I.—Nicole Greaux
—Puerto Rico—Wilson Santiago

12 p.m.–1:30 p.m.

—Lunch Break

1:30 p.m.–2:30 p.m.

—Enforcement Reports (15-minutes each):
—Puerto Rico–DNER
  —USVI—DPNR
  —U.S. Coast Guard
  —NMFS/NOAA

2:30 p.m.–3 p.m.

—CFMC Advisory Bodies Membership
—Code of Conduct and Conflict of Interest

3 p.m.–3:30 p.m.

—Other Business

3:30 p.m.–4 p.m.

—Public Comment Period (5-Minute Presentations)
—Next Meeting
—Adjourn

Note (1): Other than starting time and dates of the meetings, the established times for addressing items on the agenda may be adjusted as necessary to accommodate the timely completion of discussion relevant to the agenda items. To further accommodate discussion and completion of all items on the agenda, the meeting may be extended from, or completed prior to the date established in this notice. Changes in the agenda will be posted to the CFMC website, Facebook, Twitter and Instagram as practicable.

Note (2): Financial disclosure forms are available for inspection at this meeting, as per 50 CFR part 601.

The order of business may be adjusted as necessary to accommodate the completion of agenda items. The meeting will begin on August 11, 2022, at 9 a.m. AST, and will end on August 12, 2022 at 4 p.m. AST. Other than the start time on the first day of the meeting, interested parties should be aware that discussions may start earlier or later than indicated in the agenda, at the discretion of the Chair.

Special Accommodations

Simultaneous interpretation will be provided.

For simultaneous interpretation English-Spanish-English follow your Zoom screen instructions. You will be asked which language you prefer when you join the meeting.

For any additional information on this public virtual meeting, please contact Diana Martino, Caribbean Fishery Management Council, 270 Muñoz Rivera Avenue, Suite 401, San Juan, Puerto Rico, 00918–1903, telephone: (787) 226–8849.

Authority: 16 U.S.C. 1801 *et seq.*

Dated: July 18, 2022.

Rey Israel Marquez,

Acting Deputy Director, Office of Sustainable Fisheries, National Marine Fisheries Service.

[FR Doc. 2022–15642 Filed 7–21–22; 8:45 am]

BILLING CODE 3510–22–P

DEPARTMENT OF COMMERCE

National Oceanic and Atmospheric Administration

[RTID 0648–XC165]

Fisheries of the South Atlantic, Gulf of Mexico, and Caribbean; Southeast Data, Assessment, and Review (SEDAR); Public Meeting

AGENCY: National Marine Fisheries Service (NMFS), National Oceanic and Atmospheric Administration (NOAA), Commerce.

ACTION: Notice of SEDAR Webinar VII for SEDAR Procedural Workshop 8: Fishery Independent Index Development Under Changing Survey Design.

SUMMARY: The SEDAR Procedural Workshop 8 for Fishery Independent Index Development will consist of a series of webinars, and an in-person workshop. See **SUPPLEMENTARY INFORMATION**.

DATES: The SEDAR Procedural Workshop 8 Webinar VII will be held on August 9, 2022, from 1 p.m. to 3 p.m., Eastern.

ADDRESSES:

Meeting address: The meeting will be held via webinar. The webinar is open to members of the public. Those interested in participating should contact Julie A. Neer at SEDAR (see **FOR FURTHER INFORMATION CONTACT**) to request an invitation providing webinar access information. Please request webinar invitations at least 24 hours in advance of each webinar.

SEDAR address: 4055 Faber Place Drive, Suite 201, North Charleston, SC 29405.

FOR FURTHER INFORMATION CONTACT: Julie A. Neer, SEDAR Coordinator; (843) 571–4366; email: *Julie.neer@safmc.net*

SUPPLEMENTARY INFORMATION: The Gulf of Mexico, South Atlantic, and Caribbean Fishery Management Councils, in conjunction with NOAA Fisheries and the Atlantic and Gulf States Marine Fisheries Commissions have implemented the Southeast Data, Assessment and Review (SEDAR) process, a multi-step method for determining the status of fish stocks in the Southeast Region. SEDAR is a multi-step process including: (1) Data Workshop; (2) Assessment Process utilizing webinars; and (3) Review Workshop. The product of the Data Workshop is a data report that compiles and evaluates potential datasets and recommends which datasets are appropriate for assessment analyses. The product of the Assessment Process is a stock assessment report that describes the fisheries, evaluates the status of the stock, estimates biological benchmarks, projects future population conditions, and recommends research and monitoring needs. The assessment is independently peer reviewed at the Review Workshop. The product of the Review Workshop is a Summary documenting panel opinions regarding the strengths and weaknesses of the stock assessment and input data. Participants for SEDAR Workshops are appointed by the Gulf of Mexico, South Atlantic, and Caribbean Fishery Management Councils and NOAA Fisheries Southeast Regional Office, HMS Management Division, and Southeast Fisheries Science Center. Participants include data collectors and database managers; stock assessment scientists, biologists, and researchers; constituency representatives including fishermen, environmentalists, and NGO's; International experts; and staff of Councils, Commissions, and state and federal agencies.

The items of discussion in the webinar are as follows:

Participants will discuss data analysis for the SEDAR Procedural Workshop 8.

Although non-emergency issues not contained in this agenda may come before this group for discussion, those issues may not be the subject of formal action during this meeting. Action will be restricted to those issues specifically identified in this notice and any issues arising after publication of this notice that require emergency action under section 305(c) of the Magnuson-Stevens Fishery Conservation and Management Act, provided the public has been notified of the intent to take final action to address the emergency.

Special Accommodations

The meeting is physically accessible to people with disabilities. Requests for sign language interpretation or other auxiliary aids should be directed to the Council office (see **ADDRESSES**) at least 10 business days prior to each workshop.

Note: The times and sequence specified in this agenda are subject to change.

Authority: 16 U.S.C. 1801 *et seq.*

Dated: July 18, 2022.

Rey Israel Marquez,

Acting Deputy Director, Office of Sustainable Fisheries, National Marine Fisheries Service.

[FR Doc. 2022–15639 Filed 7–21–22; 8:45 am]

BILLING CODE 3510–22–P

DEPARTMENT OF COMMERCE

National Oceanic and Atmospheric Administration

[RTID 0648–XC180]

Fisheries of the South Atlantic; South Atlantic Fishery Management Council; Public Meetings

AGENCY: National Marine Fisheries Service (NMFS), National Oceanic and Atmospheric Administration (NOAA), Commerce.

ACTION: Notice of South Atlantic Fishery Management Council (Council) Seminar Series presentation.

SUMMARY: The Council will host a presentation on FISHstory, a pilot project developed through the Council's Citizen Science Program, on August 9, 2022 via webinar.

DATES: The webinar presentation will be held on Tuesday, August 9, 2022, from 1 p.m. until 2:30 p.m.

ADDRESSES:

Meeting address: The presentation will be provided via webinar. The webinar is open to members of the public. Information, including a link to webinar registration will be posted on the Council's website at: *https://safmc.net/safmc-seminar-series/* as it becomes available.

Council address: South Atlantic Fishery Management Council, 4055 Faber Place Drive, Suite 201, N Charleston, SC 29405.

FOR FURTHER INFORMATION CONTACT: Kim Iverson, Public Information Officer, SAFMC; phone: (843) 302–8439 or toll free: (866) SAFMC–10; fax: (843) 769–4520; email: *kim.iverson@safmc.net.*

SUPPLEMENTARY INFORMATION: As part of its ongoing Seminar Series, the Council will host a presentation on FISHstory, a citizen science pilot project to analyze historical photographs from the for-hire industry before many recreational data collection systems were in place. The talk will focus on describing the catch from the historical photographs, the technique used to estimate lengths of king mackerel in the photos, and lessons learned during the pilot project. A question-and-answer session will follow the presentation. Members of the public will have the opportunity to participate in the discussion. The presentation is for informational purposes only and no management actions will be taken.

Special Accommodations

The meeting is physically accessible to people with disabilities. Requests for auxiliary aids should be directed to the Council office (see **ADDRESSES**) 5 days prior to the meeting.

Note: The times and sequence specified in this agenda are subject to change.

Authority: 16 U.S.C. 1801 *et seq.*

Dated: July 18, 2022.

Rey Israel Marquez,

Acting Deputy Director, Office of Sustainable Fisheries, National Marine Fisheries Service.

[FR Doc. 2022–15640 Filed 7–21–22; 8:45 am]

BILLING CODE 3510–22–P

DEPARTMENT OF COMMERCE

National Oceanic and Atmospheric Administration

Agency Information Collection Activities; Submission to the Office of Management and Budget (OMB) for Review and Approval; Comment Request; National Oceanic and Atmospheric Administration, Office of Education, Higher Education Scholarship, Fellowship and Internship Programs

The Department of Commerce will submit the following information collection request to the Office of Management and Budget (OMB) for review and clearance in accordance with the Paperwork Reduction Act of 1995, on or after the date of publication of this notice. We invite the general public and other Federal agencies to comment on proposed, and continuing information collections, which helps us assess the impact of our information collection requirements and minimize the public's reporting burden. Public comments were previously requested via the **Federal Register** on March 28, 2022 (87 FR 17271) during a 60-day comment period. This notice allows for an additional 30 days for public comments.

Agency: National Oceanic and Atmospheric Administration, Commerce.

Title: National Oceanic and Atmospheric Administration, Office of Education, Higher Education Scholarship, Fellowship and Internship Programs.

OMB Control Number: 0648–0568.

Form Number(s): None.

Type of Request: Regular submission. Revision and extension of a current information collection.

Number of Respondents: 4,016.

Average Hours per Response: Hollings and EPP/MSI Application—12 hours; Hollings and EPP/MSI Reference—1 hour; Alumni Update Form—0.1 hours; Student Tracker Form—28 hours; EPP/MSI Graduate Fellowship Application—12 hours; EPP/MSI Graduate Fellowship References—1 hour; Student Training Record Form—0.5 hours; Hollings and EPP/MSI Student Surveys—0.25 hours; Hollings and EPP/MSI Applicant Survey—0.1 hours; Hollings and EPP/MSI Mentor Surveys—0.5 hours; Hollings Preparation Program Application—1 hour; Hollings Preparation Program Surveys—0.33 hours; Student Opportunities Optional Demographic Data Collection—0.25 hours.

Total Annual Burden Hours: 11,916.

Needs and Uses: This request is for extension and revision of a current information collection.

The National Oceanic and Atmospheric Administration (NOAA) Office of Education is sponsoring the information collection herein described. The Administrator of NOAA is authorized by section 4002 of the America COMPETES Act, Public Law 110–69, to establish and administer a Graduate Sciences Program and two undergraduate scholarship programs to enhance understanding of ocean, coastal, Great Lakes, and atmospheric science and stewardship by the general public and other coastal stakeholders, including underrepresented groups in ocean and atmospheric science and policy careers. In addition, NOAA's Administrator is authorized by section

214 of the Consolidated Appropriations Act, 2005, *Public Law 108–447,* to establish and administer the Ernest F. Hollings Undergraduate Scholarship Program to support undergraduate studies in oceanic and atmospheric science, research, technology, and education that support NOAA's mission and programs.

The NOAA Office of Education collects, evaluates, and assesses student data and information for the purpose of selecting successful candidates for scholarships, fellowships and internships, generating internal NOAA reports, and articles to demonstrate the success of its program.

The purpose of the NOAA Educational Partnership Program with Minority Serving Institutions (EPP/MSI) is to educate, train and graduate students in NOAA mission-aligned disciplines to build a pool of candidates eligible for the future NOAA workforce. The EPP/MSI program is strongly committed to broadening the participation of Minority Serving Institutions such as Historically Black Colleges and Universities, Hispanic Serving Institutions, Indian Tribally Controlled Colleges and Universities, Alaska Native-Serving Institutions, and Native Hawaiian-Serving Institutions. The EPP/MSI program has five program components: the Undergraduate Scholarship Program (USP); the Cooperative Science Centers (CSCs); Graduate Fellowship Program (GFP); the Graduate Sciences Program (GSP); and the Environmental Entrepreneurship Program (EEP). The GSP and EEP programs are no longer actively supporting students, however alumni of those programs may provide updates to EPP/MSI of educational and career changes.

The Ernest F. Hollings Undergraduate Scholarship Program was established to increase undergraduate training in oceanic and atmospheric science, research, technology, and education and foster multidisciplinary training opportunities. In an effort to increase the diversity of candidates applying to the Hollings Scholarship, the Hollings Preparation Program (HPP) was established in 2019.

The NOAA Office of Education requires all applicants to NOAA's Undergraduate Scholarship Programs to complete an application in order to be considered. The application package requires two faculty and/or academic advisors to complete a student scholar reference form in support of the scholarship application. Undergraduate scholarship recipients are required to complete a Student Scholarship Training Record to track their time, attendance, and accomplishments during their internships. Student scholar alumni are also requested to provide information to NOAA for internal tracking purposes. This information informs NOAA whether NOAA-funded students pursue and complete post-graduate NOAA-related science degrees, are employed by NOAA or a NOAA contractor, or in fields related to NOAA's mission.

NOAA EPP/MSI CSC grant award recipients are required to update the student tracker database with the required student information in order to assess compliance with award performance measures. While supported by NOAA scholarship and internship programs, the Office of Education surveys students and mentors to gain feedback on experiences and to assess program impact. Feedback collected from surveys will be used to improve programs to ensure the highest quality experience for supported students.

In compliance with Service Equity Assessment (*E.O. 13985,* Section 5) NOAA identified a lack of demographic information on people that work for (FTE, contractor, or grantee), or are interns, students or grantees of NOAA as a barrier to measuring the success of stated Diversity, Equity, Inclusion, and Justice (DEIJ) goals, and gaining approval to collect such data will be important moving forward. NOAA has a continuing commitment to monitor the operation of its review and award processes to identify and address any inequities based on gender, race, ethnicity, or disability of its proposed applicants. To gather information needed for this important task, the applicant(s) should submit the requested information for each identified applicant(s) with each proposal using the proposed optional demographic survey. Submission of the requested information is voluntary and is not a precondition of award unless otherwise noted by the opportunity. Any individual not wishing to submit some or all the information should check the box provided for this purpose. Upon receipt of the application, this form will be separated from the application. This form will not be duplicated, and it will not be a part of the review process (unless specified by the opportunity). Data will be confidential.

The collected data supports the Office of Education's program performance measures. To measure the impact of these programs, the data collected are compared to the available data in the national education databases (*e.g.,* National Science Foundation and National Center for Education Statistics) and NOAA workforce management database. Furthermore, the student data collection identifies degree and NOAA mission-aligned discipline pipeline areas, guiding NOAA's effort to recruit for its mission-aligned educational and training programs and future workforce.

This information collection includes several changes to the type and amount of information being collected as described below:

1. Updates to Student Scholarship Application and Reference Forms
2. Addition of Student and Mentor Surveys
3. Addition of the Hollings Preparation Program Application and Surveys
4. Graduate Fellowship Program Application and References
5. Addition of Student Opportunities Optional Demographic Data Collection
6. Removal of the Dr. Nancy Foster and the National Marine Fisheries Service (NMFS) Recruiting, Training, and Research (RTR) Program
7. Revision of the title collection.

Affected Public: Individuals or households; business or other for-profit; not-for-profit institutions; Federal, State, Local or Tribal Government.

Frequency: On occasion, depending on the collection instrument.

Respondent's Obligation: Voluntary or Required to Obtain or Retain Benefits depending on the collection instrument.

Legal Authority: The America COMPETES Act, Public Law 110–69, Section 4002; The Consolidated Appropriations Act, 2005, *Public Law 108–447,* Section 214; Executive Orders 13985 and 14035.

This information collection request may be viewed at *www.reginfo.gov.* Follow the instructions to view the Department of Commerce collections currently under review by OMB.

Written comments and recommendations for the proposed information collection should be submitted within 30 days of the publication of this notice on the following website *www.reginfo.gov/public/do/PRAMain.* Find this particular information collection by selecting ''Currently under 30-day Review—Open for Public Comments'' or by using the search function and entering either the title of the collection or the OMB Control Number 0648–0568.

Sheleen Dumas,

Department PRA Clearance Officer, Office of the Chief Information Officer, Commerce Department.

[FR Doc. 2022–15677 Filed 7–21–22; 8:45 am]

BILLING CODE 3510–12–P

DEPARTMENT OF COMMERCE

National Telecommunications and Information Administration

Agency Information Collection Activities; Submission to the Office of Management and Budget (OMB) for Review and Approval; Comment Request; State Digital Equity Planning Grant Program

AGENCY: National Telecommunications and Information Administration (NTIA), Commerce.

ACTION: Notice of information collection, request for comment.

SUMMARY: The Department of Commerce, following the Paperwork Reduction Act of 1995 (PRA), invites the public and other Federal agencies to comment on proposed and continuing information collections, which helps us assess the impact of our information collection requirements and minimize the public's reporting burden. This Notice of Information Collection is for the State Digital Equity Planning Grant Program Semi-Annual Performance (Technical) Report and a Public Annual Report. The purpose of this notice is to allow for 60 days of public comment preceding the submission of the collection to OMB.

DATES: To ensure consideration, comments regarding this proposed information collection must be received on or before September 20, 2022.

ADDRESSES: Interested persons are invited to submit written comments to Teri Caswell, Broadband Program Specialist, Grants Management and Compliance, at *tcaswell@ntia.gov.* Please reference SDEPG Data Collection in the subject line of your comments. Do not submit Confidential Business Information or otherwise sensitive or protected information.

FOR FURTHER INFORMATION CONTACT: Requests for additional information or specific questions related to collection activities should be directed Teri Caswell, Broadband Program Specialist, Grants Management and Compliance, Office of internet Connectivity and Growth, National Telecommunication and Information Administration, U.S. Department of Commerce, 1401 Constitution Avenue NW, Room 4826, Washington, DC 20230, or by email to *broadbandusa@ntia.gov* or via telephone at (202) 482–2048.

SUPPLEMENTARY INFORMATION:

I. Abstract

The State Digital Equity Planning Grant Program (SDEPG), authorized by Section 60304(c) of the Infrastructure Investment and Jobs Act of 2021, Public Law 117–58, 135 Stat. 429 (November 15, 2021) (Infrastructure Act or Act), provides new federal funding for grants to eligible applicants for the purpose of developing State Digital Equity Plans. Through these Plans, each State will, among other things, identify barriers to digital equity in the State and strategies for overcoming those barriers. Further, U.S. territories and possessions (other than Puerto Rico), Indian Tribes, Alaska Native entities, and Native Hawaiian organizations may also seek grants, cooperative agreements, or contracts to develop their own digital equity plans and, in the case of Tribal entities, to provide input into the digital equity plans of the States in which they are located. The purpose of SDEPG is to promote the achievement of digital equity, support digital inclusion activities, and build capacity for efforts by States relating to the adoption of broadband by residents of those States.

On May 13, 2022, NTIA published the program's Notice of Funding Opportunity (NOFO) on internetforall.gov to describe the requirements under which it will award grants for the SDEPG.[1] The NOFO required award recipients to submit financial reports, performance (technical) reports, and annual reports to the NTIA Federal Program Officer and the NIST Grants Officer and Grants Specialist. Award recipients must follow the reporting requirements described in Sections A.01, Reporting Requirement, of the Department of Commerce Financial Assistance Standard Terms and Conditions (dated November 12, 2020). Additionally, in accordance with 2 CFR part 170, all recipients of a federal award made on or after October 1, 2010, must comply with reporting requirements under the Federal Funding Accountability and Transparency Act of 2006 (Pub. L. 109–282).

NTIA will use the information collected from each award recipient to effectively administer and monitor the grant program to ensure the achievement of Digital Equity program purposes and account for the expenditure of federal funds to deter waste, fraud, and abuse.

II. Method of Collection

State Digital Equity Planning Grant Program

Award recipients will submit financial and performance reports on a semi-annual basis for the periods ending March 31st and September 30th of each year, and an annual report no later than one year after receiving grant funds and until they have expended all funds. NTIA will collect data through electronic submission.

III. Data

OMB Control Number: 0660–XXXX.

Form Number(s): TBD.

Type of Review: New information collection.

Affected Public: Grant award recipients consisting of States, territories or possessions of the United States, Indian Tribes, Alaska Native entities, and Native Hawaiian organizations.

Estimated Number of Respondents: 606.

Estimated Time per Response: 33.22.

Estimated Total Annual Burden Hours: 60,393.96.

Estimated Total Annual Cost to Public: $2,882,603.71.

Respondent's Obligation: Mandatory.

Legal Authority: Section 60304(c) of the Infrastructure Investment and Jobs Act of 2021, Public Law 117–58, 135 Stat. 429 (November 15, 2021).

IV. Request for Comments

We are soliciting public comments to permit the Department/Bureau to:

(a) Evaluate whether the proposed information collection is necessary for the proper functions of the Department, including whether the information will have practical utility.

(b) Evaluate the accuracy of our estimate of the time and cost burden for this proposed collection, including the validity of the methodology and assumptions used.

(c) Evaluate ways to enhance the quality, utility, and clarity of the information to be collected.

(d) Minimize the reporting burden on those who are to respond, including the use of automated collection techniques or other forms of information technology.

Comments that you submit in response to this notice are a matter of public record. We will include or summarize each comment in our request to OMB to approve this ICR. Before including your address, phone number, email address, or other personal identifying information in your comment, you should be aware that your entire comment—including your personal identifying information—may be made publicly available at any time. While you may ask us in your comment to withhold your personal identifying information from public review, we

[1] *See* State Digital Equity Planning Grant Program (DE) Notice of Funding Opportunity (NOFO) (May 13, 2022), *https://www.internetforall.gov/program/digital-equity-act-programs.*

cannot guarantee that we will be able to do so.

Sheleen Dumas,

Department PRA Clearance Officer, Office of the Chief Information Officer, Department of Commerce.

[FR Doc. 2022–15672 Filed 7–21–22; 8:45 am]

BILLING CODE 3510–60–P

COMMITTEE FOR PURCHASE FROM PEOPLE WHO ARE BLIND OR SEVERELY DISABLED

Procurement List; Addition

AGENCY: Committee for Purchase From People Who Are Blind or Severely Disabled.

ACTION: Additions to and deletions from the Procurement List.

SUMMARY: This action adds service(s) to the Procurement List that will be furnished by nonprofit agencies employing persons who are blind or have other severe disabilities.

DATES: *Date added to the Procurement List:* August 21, 2022.

ADDRESSES: Committee for Purchase From People Who Are Blind or Severely Disabled, 355 E Street SW, Suite 325, Washington, DC 20024–3243.

FOR FURTHER INFORMATION CONTACT: Michael R. Jurkowski, Telephone: (703) 785–6404 or email *CMTEFedReg@AbilityOne.gov.*

SUPPLEMENTARY INFORMATION:

Additions

On 12/10/2021, the Committee for Purchase From People Who Are Blind or Severely Disabled published notice of proposed additions to the Procurement List. This notice is published pursuant to 41 U.S.C. 8503 (a)(2) and 41 CFR 51–2.3.

After consideration of the material presented to it concerning capability of qualified nonprofit agencies to provide the product(s) and service(s) and impact of the additions on the current or most recent contractors, the Committee has determined that the product(s) and service(s) listed below are suitable for procurement by the Federal Government under 41 U.S.C. 8501–8506 and 41 CFR 51–2.4.

Regulatory Flexibility Act Certification

I certify that the following action will not have a significant impact on a substantial number of small entities. The major factors considered for this certification were:

1. The action will not result in any additional reporting, recordkeeping or other compliance requirements for small entities other than the small organizations that will furnish the product(s) and service(s) to the Government.

2. The action will result in authorizing small entities to furnish the product(s) and service(s) to the Government.

3. There are no known regulatory alternatives which would accomplish the objectives of the Javits-Wagner-O'Day Act (41 U.S.C. 8501–8506) in connection with the product(s) and service(s) proposed for addition to the Procurement List.

End of Certification

Accordingly, the following service is added to the Procurement List:

Service(s)

Service Type: Section 508 Compliance
Mandatory for: Defense Contract Management Agency (DCMA), DCMA Headquarters, Fort Lee, VA
Designated Source of Supply: Columbia Lighthouse for the Blind, Washington, DC
Contracting Activity: DEFENSE INFORMATION SYSTEMS AGENCY (DISA), DEFENSE INFORMATION SYSTEMS AGENCY

The Committee finds good cause to dispense with the 30-day delay in the effective date normally required by the Administrative Procedure Act. See 5 U.S.C. 553(d). This addition to the Committee's Procurement List is effectuated because of the expiration of the Defense Contract Management Agency contract. The Federal customer contacted and has worked diligently with the AbilityOne Program to fulfill this service need under the AbilityOne Program. To avoid performance disruption, and the possibility that the Defense Contract Management Agency will refer its business elsewhere, this addition must be effective on August 7, 2022, ensuring timely execution for an August 10, 2022, start date while still allowing 16 days for comment. Pursuant to its own regulation 41 CFR 51–2.4, the Committee has been in contact with one of the affected parties, the incumbent of the expiring contract, since May 2021 and determined that no severe adverse impact exists. The Committee also published a notice of proposed Procurement List addition in the **Federal Register** on December 10, 2021 and did not receive any comments from any interested persons, including from the incumbent contractor. This addition will not create a public hardship and has limited effect on the public at large, but, rather, will create new jobs for other affected parties—people with significant disabilities in the AbilityOne program who otherwise face challenges locating employment. Moreover, this addition will enable Federal customer operations to continue without interruption.

Michael R. Jurkowski,

Acting Director, Business Operations.

[FR Doc. 2022–15705 Filed 7–21–22; 8:45 am]

BILLING CODE 6353–01–P

COMMITTEE FOR PURCHASE FROM PEOPLE WHO ARE BLIND OR SEVERELY DISABLED

Procurement List; Proposed Additions and Deletions

AGENCY: Committee for Purchase From People Who Are Blind or Severely Disabled.

ACTION: Proposed additions to and deletions from the Procurement List.

SUMMARY: The Committee is proposing to add product(s) to the Procurement List that will be furnished by nonprofit agencies employing persons who are blind or have other severe disabilities, and delete a service previously furnished by such agencies.

DATES: Comments must be received on or before: August 21, 2022.

ADDRESSES: Committee for Purchase From People Who Are Blind or Severely Disabled, 355 E Street SW, Suite 325, Washington, DC, 20024–3243.

FOR FURTHER INFORMATION CONTACT: For further information or to submit comments contact: Michael R. Jurkowski, Telephone: (703) 785–6404 or email *CMTEFedReg@AbilityOne.gov.*

SUPPLEMENTARY INFORMATION: This notice is published pursuant to 41 U.S.C. 8503 (a)(2) and 41 CFR 51–2.3. Its purpose is to provide interested persons an opportunity to submit comments on the proposed actions.

Additions

If the Committee approves the proposed additions, the entities of the Federal Government identified in this notice will be required to procure the product(s) and service(s) listed below from nonprofit agencies employing persons who are blind or have other severe disabilities.

The following product(s) are proposed for addition to the Procurement List for production by the nonprofit agencies listed:

Product(s)

NSN(s)—Product Name(s):
6515–00–NIB–9762—Gloves, Exam, Powder-Free, Nitrile, Textured, Skyblue, Chemo-tested, Small

6515–00–NIB–9763—Gloves, Exam, Powder-Free, Nitrile, Textured, Skyblue, Chemo-tested, Medium
6515–00–NIB–9764—Gloves, Exam, Powder-Free, Nitrile, Textured, Skyblue, Chemo-tested, Large
6515–00–NIB–9765—Gloves, Exam, Powder-Free, Nitrile, Textured, Skyblue, Chemo-tested, X-Large
Designated Source of Supply: BOSMA Enterprises, Indianapolis, IN
Contracting Activity: DEFENSE LOGISTICS AGENCY, DLA TROOP SUPPORT
Distribution: B-List
Mandatory for: Broad Government Requirement

Deletions

The following service(s) are proposed for deletion from the Procurement List:

Service(s)

Service Type: Transcription Services
Mandatory for: US Army, US Army War College, Carlisle, PA (Offsite: 5590 Derry Street, Harrisburg, PA 17111)
Designated Source of Supply: InspiriTec, Inc., Philadelphia, PA
Contracting Activity: DEPT OF THE ARMY, W6QM MICC–CARLISLE BARRACKS

Michael R. Jurkowski,

Acting Director, Business Operations.

[FR Doc. 2022–15703 Filed 7–21–22; 8:45 am]

BILLING CODE 6353–01–P

COMMODITY FUTURES TRADING COMMISSION

Agency Information Collection Activities: Notice of Intent To Renew Collection Number 3038–0067, Part 162—Protection of Consumer Information Under the Fair Credit Reporting Act

AGENCY: Commodity Futures Trading Commission.

ACTION: Notice.

SUMMARY: The Commodity Futures Trading Commission (''Commission'') is announcing an opportunity for public comment on the proposed renewal of a collection of certain information by the agency. Under the Paperwork Reduction Act (''PRA''), Federal agencies are required to publish notice in the **Federal Register** concerning each proposed collection of information, including each proposed extension of an existing collection of information, and to allow 60 days for public comment. This notice solicits comments on the collections of information mandated by Part 162 of the Commission's regulations (Protection of Consumer Information under the Fair Credit Reporting Act).

DATES: Comments must be submitted on or before September 20, 2022.

ADDRESSES: You may submit comments, identified by ''OMB Control Number 3038–0067,'' by any of the following methods:

- The Agency's website, at *https://comments.cftc.gov/.* Follow the instructions for submitting comments through the website.
- *Mail:* Christopher Kirkpatrick, Secretary of the Commission, Commodity Futures Trading Commission, Three Lafayette Centre, 1155 21st Street NW, Washington, DC 20581.
- *Hand Delivery/Courier:* Same as Mail above.

Please submit your comments using only one method. All comments must be submitted in English, or if not, accompanied by an English translation. Comments will be posted as received to *https://www.cftc.gov.*

FOR FURTHER INFORMATION CONTACT: Andrew Chapin, Associate Chief Counsel, Market Participants Division, Commodity Futures Trading Commission, (202) 418–5465, email: *achapin@cftc.gov.*

SUPPLEMENTARY INFORMATION: Under the PRA,[1] Federal agencies must obtain approval from the Office of Management and Budget (''OMB'') for each collection of information they conduct or sponsor. ''Collection of Information'' is defined in 44 U.S.C. 3502(3) and 5 CFR 1320.3 and includes agency requests or requirements that members of the public submit reports, keep records, or provide information to a third party. Section 3506(c)(2)(A) of the PRA, 44 U.S.C. 3506(c)(2)(A), requires Federal agencies to provide a 60-day notice in the **Federal Register** concerning each proposed collection of information, including each proposed extension of an existing collection of information, before submitting the collection to OMB for approval. To comply with this requirement, the Commission is publishing notice of the proposed collection of information listed below.

Title: Part 162—Protection of Consumer Information under the Fair Credit Reporting Act (OMB Control No. 3038–0067). This is a request for an extension of currently approved information collection.

Abstract: On July 21, 2010, the President signed into law the Dodd-Frank Wall Street Reform and Consumer Protection Act (''Dodd-Frank Act'').[2] Title X of the Dodd-Frank Act, which is titled the Consumer Financial Protection Act of 2010 (''CFP Act''), amends a number of federal consumer protection laws enacted prior to the Dodd-Frank Act including, in relevant part, the Fair Credit Reporting Act (''FCRA'')[3] and the Fair and Accurate Credit Transactions Act of 2003 (''FACT Act'').[4] Specifically, Section 1088 of the CFP Act sets out certain amendments to the FCRA and the FACT Act directing the Commission to promulgate regulations that are intended to provide privacy protections to certain consumer information held by an entity that is subject to the jurisdiction of the Commission.

Section 1088 amends section 214(b) of the FACT Act—which added section 624 to the FCRA in 2003—and directs the Commission to implement the provisions of section 624 of the FCRA with respect to persons that are subject to the Commission's enforcement jurisdiction. Section 624 of the FCRA gives a consumer the right to block affiliates of an entity subject to the Commission's jurisdiction from using certain information obtained from such entity to make solicitations to that consumer (hereinafter referred to as the ''affiliate marketing rules'').[5] Under the affiliate marketing rules, the entities covered by the regulations are expected to prepare and provide clear, conspicuous and concise opt-out notices to any consumers with whom such entities have a pre-existing business relationship. A covered entity only has to provide an opt-out notice to the extent that an affiliate of the covered entity plans to make a solicitation to any of the covered entity's consumers. The purpose of the opt-out notice is to provide consumers with the ability to prohibit marketing solicitations from affiliate businesses that do not have a pre-existing business relationship with the consumers, but that do have access to such consumers' nonpublic, personal information. A covered entity is required to send opt-out notices at the maximum of once every five years.

Section 1088 of the CFP Act also amends section 628 of the FCRA and mandates that the Commission implement regulations requiring persons subject to the Commission's jurisdiction who possess or maintain consumer report information in connection with their business activities to properly dispose of that information (hereinafter referred to as the ''disposal

[1] 44 U.S.C. 3501 *et seq.*

[2] Public Law 111–203, 124 Stat. 1376 (2010).

[3] 15 U.S.C. 1681–1681x.

[4] Public Law 108–159, 117 Stat. 1952, 1980 (2003).

[5] The affiliate marketing rules are found in Part 162, Subpart A (Business Affiliate Marketing Rules) of the CFTC's regulations. 17 CFR part 162, subpart A.

rules'').[6] Under the disposal rules, the entities covered by the regulations are expected to develop and implement a written disposal plan with respect to any consumer information within such entities' possession. The regulations provide that a covered entity develop a written disposal plan that is tailored to the size and complexity of such entity's business. The purpose of the written disposal plan is to establish a formal plan for the disposal of nonpublic, consumer information, which otherwise could be illegally confiscated and used by unauthorized third parties. Under the rules, a covered entity is required to develop a written disposal plan only once, but may subsequently amend such plan from time to time.

In addition, Section 1088 of the CFP Act amended the FCRA by adding the CFTC and the Securities and Exchange Commission (''SEC,'' together with the CFTC, the ''Commissions'') to the list of federal agencies required to jointly prescribe and enforce identity theft red flags rules and guidelines and card issuer rules. Thus, the Dodd-Frank Act provides for the transfer of rulemaking responsibility and enforcement authority to the CFTC and SEC with respect to the entities under their respective jurisdiction. Accordingly, the Commissions have issued final rules and guidelines (hereinafter referred to as the ''identity theft rules'')[7] to implement new statutory provisions enacted by the CFP Act that amend section 615(e) of the FCRA and direct the Commissions to prescribe rules requiring entities that are subject to the Commissions' jurisdiction to address identity theft. Under the identity theft rules, entities covered by the regulation are required to develop and implement reasonable policies and procedures to identify, detect, and respond to relevant red flags for identity theft that are appropriate to the size and complexity of such entity's business and, in the case of entities that issue credit or debit cards, to assess the validity of, and communicate with cardholders regarding, address changes.[8] They are also required to provide for the continued administration of identity theft policies and procedures.

With respect to the collection of information, the Commission invites comments on:

- Whether the proposed collection of information is necessary for the proper performance of the functions of the Commission, including whether the information will have a practical use;
- The accuracy of the Commission's estimate of the burden of the proposed collection of information, including the validity of the methodology and assumptions used;
- Ways to enhance the quality,usefulness, and clarity of the information to be collected; and
- Ways to minimize the burden of collection of information on those whoare to respond, including through the use of appropriate automated electronic, mechanical, or other technological collection techniques or other forms of information technology; *e.g.,* permitting electronic submission of responses.

You should submit only information that you wish to make available publicly. If you wish the Commission to consider information that you believe is exempt from disclosure under the Freedom of Information Act, a petition for confidential treatment of the exempt information may be submitted according to the procedures established in § 145.9 of the Commission's regulations.[9]

The Commission reserves the right, but shall have no obligation, to review, pre-screen, filter, redact, refuse or remove any or all of your submission from *https://www.cftc.gov* that it may deem to be inappropriate for publication, such as obscene language. All submissions that have been redacted or removed that contain comments on the merits of the information collection request will be retained in the public comment file and will be considered as required under the Administrative Procedure Act and other applicable laws, and may be accessible under the Freedom of Information Act.

Burden Statement: The Commission is revising its burden estimate for this collection to reflect its estimate of the current number of CFTC registrants subject to the requirements of Part 162 regulations. The respondent burden for this collection is estimated to be as follows:

Estimated Number of Respondents: 4,420.

Estimated Total Annual Burden Hours: 58,090.

Frequency of Collection: As applicable.

There are no capital costs or operating and maintenance costs associated with this collection.

(Authority: 44 U.S.C. 3501 *et seq.*)

Dated: July 19, 2022.

Robert Sidman,

Deputy Secretary of the Commission.

[FR Doc. 2022–15698 Filed 7–21–22; 8:45 am]

BILLING CODE 6351–01–P

[6] The disposal rules are found in Part 162, Subpart B (Disposal Rules) of the CFTC's regulations. 17 CFR part 162, subpart B.

[7] The CFTC's identity theft rules are found in Part 162, Subpart C (Identity Theft Red Flags) of the CFTC's regulations. 17 CFR part 162, subpart C.

[8] The CFTC understands that CFTC-regulated entities generally do not issue credit or debit cards, but instead may partner with other entities, such as banks, that issue cards on their behalf. These other entities, which are not regulated by the CFTC, are already subject to substantially similar change of address obligations pursuant to other federal regulators' identity theft red flags rules. Therefore, the CFTC does not expect that any CFTC-regulated entities will be subject to the related information collection requirements under the CFTC's identity theft rules.

[9] 17 CFR 145.9.

U.S. INTERNATIONAL DEVELOPMENT FINANCE CORPORATION

[DFC–013]

Submission for OMB Review; Comments Request

AGENCY: U.S. International Development Finance Corporation (DFC).

ACTION: Notice of information collection; request for comment.

SUMMARY: Under the provisions of the Paperwork Reduction Act, agencies are required to publish a Notice in the **Federal Register** notifying the public that the agency is renewing an existing information collection for OMB review and approval and requests public review and comment on the submission. The agencies received no comments in response to the sixty (60) day notice. The purpose of this notice is to allow an additional thirty (30) days for public comments to be submitted. Comments are being solicited on the need for the information; the accuracy of the burden estimate; the quality, practical utility, and clarity of the information to be collected; and ways to minimize reporting the burden, including automated collected techniques and uses of other forms of technology.

DATES: Comments must be received by September 20, 2022.

ADDRESSES: Comments and requests for copies of the subject information collection may be sent by any of the following methods:

- *Mail:* Deborah Papadopoulos, Agency Submitting Officer, U.S. International Development Finance Corporation, 1100 New York Avenue NW, Washington, DC 20527.
- *Email: fedreg@dfc.gov.*

Instructions: All submissions received must include the agency name and agency form number or OMB form number for this information collection. Electronic submissions must include the agency form number in the subject line to ensure proper routing. Please note that all written comments received in response to this notice will be considered public records.

FOR FURTHER INFORMATION CONTACT: Agency Submitting Officer: Deborah Papadopoulos, (202) 357–3979.

SUPPLEMENTARY INFORMATION: The agency received no comments in response to the sixty (60) day notice published in **Federal Register** volume 87 pages 30208–30209 on May 18, 2022. Upon publication of this notice, DFC will submit to OMB a request for approval of the following information collection.

Summary Form Under Review

Title of Collection: Loan Transaction and Qualifying Loan Schedule Reports.

Type of Review: Extension without change of a currently approved information collection.

Agency Form Number: DFC–013.

OMB Form Number: 3015–0011.

Frequency: Semi-annual.

Affected Public: Business or other for-profit.

Total Estimated Number of Annual Number of Respondents: 300.

Estimated Time per Respondent: 4 hours.

Total Estimated Number of Annual Burden Hours: 2,400.

Abstract: Semi-annual reporting by partner financial institutions via the Loan Transaction and Qualifying Loan Schedule Reports will be required to monitor financial compliance with the business terms in loan and bond guarantees administered by the DFC's Office of Development Credit and to analyze the guaranty portfolio and loans placed under guaranty coverage. The information collected in the reports may also play a role, when coupled with other methods and tools, in evaluating program effectiveness.

Dated: July 19, 2022.

Nichole Skoyles,

Administrative Counsel, Office of the General Counsel.

[FR Doc. 2022–15750 Filed 7–21–22; 8:45 am]

BILLING CODE 3210–01–P

U.S. INTERNATIONAL DEVELOPMENT FINANCE CORPORATION

[DFC–001A; DFC–001B; DFC–002; DFC–003; DFC–004; DFC–005; DFC–006]

Submission for OMB Review; Comments Request

AGENCY: U.S. International Development Finance Corporation (DFC).

ACTION: Notice of information collection; request for comment.

SUMMARY: Under the provisions of the Paperwork Reduction Act, agencies are required to publish a Notice in the **Federal Register** notifying the public that the agency is renewing an existing information collection for OMB review and approval and requests public review and comment on the submission. The agencies received no comments in response to the sixty (60) day notice. The purpose of this notice is to allow an additional thirty (30) days for public comments to be submitted. Comments are being solicited on the need for the information; the accuracy of the burden estimate; the quality, practical utility, and clarity of the information to be collected; and ways to minimize reporting the burden, including automated collected techniques and uses of other forms of technology.

DATES: Comments must be received by August 22, 2022.

ADDRESSES: Comments and requests for copies of the subject information collection may be sent by any of the following methods:

- *Mail:* Deborah Papadopoulos, Agency Submitting Officer, U.S. International Development Finance Corporation, 1100 New York Avenue NW, Washington, DC 20527.
- *Email: fedreg@dfc.gov.*

Instructions: All submissions received must include the agency name and agency form number or OMB form number for this information collection. Electronic submissions must include the agency form number in the subject line to ensure proper routing. Please note that all written comments received in response to this notice will be considered public records.

FOR FURTHER INFORMATION CONTACT: Agency Submitting Officer: Deborah Papadopoulos, (202) 357–3979.

SUPPLEMENTARY INFORMATION: The agency received no comments in response to the sixty (60) day notice published in **Federal Register** volume 87 page 30209 on May 18, 2022. Upon publication of this notice, DFC will submit to OMB a request for approval of the following information collections.

Summary Forms Under Review

Title of Collection: Application for Finance. Application for Direct Equity Investment.

Type of Review: Extension without change of a currently approved information collection.

Agency Form Number: DFC–001A, DFC–001B.

OMB Form Number: 3015–0004.

Frequency: Once per investor per project.

Affected Public: Business or other for-profit; not-for-profit institutions; individuals.

Total Estimated Number of Annual Number of Respondents: 320.

Estimated Time per Respondent: 1.5 hours.

Total Estimated Number of Annual Burden Hours: 480 hours.

Abstract: The Application for Finance will be the principal document used by DFC to determine the proposed transaction's eligibility for debt financing and will collect information for financial underwriting analysis. The Application for Direct Equity Investment will collect information for direct equity applications.

Title of Collection: Request for Registration for Political Risk Insurance.

Type of Review: Extension without change of a currently approved information collection.

Agency Form Number: DFC–002.

OMB Form Number: 3015–0008.

Frequency: Once per investor per project.

Affected Public: Business or other for-profit; not-for-profit institutions; individuals.

Total Estimated Number of Annual Number of Respondents: 220.

Estimated Time per Respondent: 30 minutes.

Total Estimated Number of Annual Burden Hours: 110 hours.

Abstract: The Request for Registration for Political Risk Insurance will be the initial document used by DFC to determine the investors' and the project's eligibility for political risk insurance coverage.

Title of Collection: Application for Political Risk Insurance.

Type of Review: Extension without change of a currently approved information collection.

Agency Form Number: DFC–003.

OMB Form Number: 3015–0003.

Frequency: Once per investor per project.

Affected Public: Business or other for-profit; not-for-profit institutions; individuals.

Total Estimated Number of Annual Number of Respondents: 220.

Estimated Time per Respondent: 1.5 hours.

Total Estimated Number of Annual Burden Hours: 330 hours.

Abstract: The Application for Political Risk Insurance will be the principal document used by DFC to determine the investors' and the project's eligibility for political risk insurance coverage.

Title of Collection: Investment Funds Application.

Type of Review: Extension without change of a currently approved information collection.

Agency Form Number: DFC–004.

OMB Form Number: 3015–0006.

Frequency: Once per investor per project.

Affected Public: Business or other for-profit; not-for-profit institutions; individuals.

Total Estimated Number of Annual Number of Respondents: 150.

Estimated Time per Respondent: 2 hours.

Total Estimated Number of Annual Burden Hours: 300 hours.

Abstract: The Investment Funds Application will be the principal document used by the agency to determine the investor's and the project's eligibility for funding and will collect information for underwriting analysis.

Title of Collection: Personal Financial Statement.

Type of Review: Extension without change of a currently approved information collection.

Agency Form Number: DFC–005.

OMB Form Number: 3015–0007.

Frequency: Once per investor per project.

Affected Public: Individuals.

Total Estimated Number of Annual Number of Respondents: 75.

Estimated Time per Respondent: 1 hour.

Total Estimated Number of Annual Burden Hours: 75 hours.

Abstract: The Personal Financial Statement will be used by the agency to determine if individuals who are providing equity investment in or credit support to a proposed transaction have sufficient financial wherewithal to meet their expected obligations under the proposed terms of the agency's financing.

Title of Collection: Personal Identification Form.

Type of Review: Extension without change of a currently approved information collection.

Agency Form Number: DFC–006.

OMB Form Number: 3015–0010.

Frequency: Once per party per project.

Affected Public: Business or other for-profit; not-for-profit institutions; individuals.

Total Estimated Number of Annual Number of Respondents: 975.

Estimated Time per Respondent: 1 hour.

Total Estimated Number of Annual Burden Hours: 975 hours.

Abstract: The Personal Identification Form will used by the agency in its Know Your Customer procedures. The agency will perform a robust due diligence review on each party that has a significant relationship to the projects the agency supports, and this collection is one aspect of that review.

Dated July 19, 2022.

Nichole Skoyles,

Administrative Counsel, Office of the General Counsel.

[FR Doc. 2022–15749 Filed 7–21–22; 8:45 am]

BILLING CODE 3210–01–P

DEPARTMENT OF EDUCATION

National Assessment Governing Board

Notice of Meeting

AGENCY: National Assessment Governing Board, Department of Education.

ACTION: Notice of open and closed meetings.

SUMMARY: This notice sets forth the agenda, time, and instructions to access or participate in the National Assessment Governing Board (hereafter referred to as Governing Board or Board) meetings scheduled for August 3–5, 2022 in Charleston, South Carolina. This notice provides information about the meetings to members of the public who may be interested in attending the meetings and/or providing written comments related to the work of the Governing Board. Notice of the meetings is required under Section 10(a)(2) of the Federal Advisory Committee Act (FACA).

ADDRESSES: Hyatt House, 560 King Street, Charleston, South Carolina, 29403.

DATES: August 3–5, 2022.

FOR FURTHER INFORMATION CONTACT: Munira Mwalimu, Executive Officer/Designated Federal Official for the Governing Board, 800 North Capitol Street NW, Suite 825, Washington, DC 20002, telephone: (202) 357–6906, fax: (202) 357–6945, email: *Munira.Mwalimu@ed.gov.*

SUPPLEMENTARY INFORMATION:

Statutory Authority and Function: The Governing Board is established under the National Assessment of Educational Progress Authorization Act, Title III of Public Law 107–279 (20 U.S.C. 9621). Information on the Governing Board and its work can be found at *www.nagb.gov.*

The Governing Board formulates policy for the National Assessment of Educational Progress (NAEP) administered by the National Center for Education Statistics (NCES). The Governing Board's responsibilities include:

''(1) selecting the subject areas to be assessed; (2) developing appropriate student achievement levels; (3) developing assessment objectives and testing specifications that produce an assessment that is valid and reliable, and are based on relevant widely accepted professional standards; (4) developing a process for review of the assessment which includes the active participation of teachers, curriculum specialists, local school administrators, parents, and concerned members of the public; (5) designing the methodology of the assessment to ensure that assessment items are valid and reliable, in consultation with appropriate technical experts in measurement and assessment, content and subject matter, sampling, and other technical experts who engage in large scale surveys; (6) measuring student academic achievement in grades 4, 8, and 12 in the authorized academic subjects; (7) developing guidelines for reporting and disseminating results; (8) developing standards and procedures for regional and national comparisons; (9) taking appropriate actions needed to improve the form, content use, and reporting of results of an assessment; and (10) planning and executing the initial public release of NAEP reports.''

Standing Committee Meetings

The Governing Board's standing committees will meet to conduct regularly scheduled work planned for the quarterly board meeting and any items undertaken by standing committees for consideration by the full Governing Board. (Please see committee meeting minutes for previous meetings, available at *https://www.nagb.gov/governing-board/quarterly-board-meetings.html*). Standing committee meeting agendas and meeting materials will be posted on the Governing Board's website, *www.nagb.gov,* no later than five business days prior to the meetings.

Standing Committee Meetings

Wednesday, August 3, 2022

Nominations Committee (Closed Session)

11:15 a.m.–12:15 p.m.

The Nominations Committee will meet in closed session on August 3, 2022 from 11:15 a.m. to 12:15 p.m. to discuss plans for reviewing applications and conducting ratings for board vacancies for the 2022–2023 term. These discussions pertain solely to internal personnel rules and practices of an agency and information of a personal nature where disclosure would constitute a clearly unwarranted invasion of personal privacy. As such, the discussions are protected by exemptions 2 and 6 of the Government Sunshine Act, 5 U.S.C. 552b(c).

Thursday, August 4, 2022

Executive Committee Meeting

8:30 a.m.–9:15 a.m. (Open Session)
9:15 a.m.–10:00 a.m. (Closed Session)

The Executive Committee will meet in closed session on August 4, 2022 from 9:15 a.m. to 10:00 a.m. to discuss the NAEP Budget and Assessment Schedule. These discussions with NCES may impact current and future NAEP contracts and budgets and must be kept confidential to maintain the integrity of the federal acquisition process. Public disclosure of this confidential information would significantly impede implementation of the NAEP assessment program if conducted in open session. Such matters are protected by exemption 9(B) of the Government Sunshine Act, 5 U.S.C. 552b(c).

Friday, August 5, 2022

Reporting and Dissemination Committee (R&D)

8:30 a.m.–10:30 a.m. (Open Session)

Friday, August 5, 2022

Assessment Development Committee (ADC)

8:30 a.m.–9:00 a.m. (Open Session)
9:00 a.m.–10:30 a.m. (Closed Session)

The Assessment Development Committee will meet in closed session on August 4, 2022 from 9:00 a.m. to 10:30 a.m. to review secure NAEP assessment items. These items have not been released to the public. Public disclosure of this confidential information would significantly impede implementation of the NAEP assessment program if conducted in open session. Such matters are protected by exemption 9(B) of the Government Sunshine Act, 5 U.S.C. 552b(c).

Friday, August 5, 2022

Committee on Standards, Design and Methodology

8:30 a.m.–10:30 a.m. (Open Session)

Quarterly Governing Board Meeting

The plenary sessions of the Governing Board's August 2022 quarterly meeting will be held on the following dates and times:

Thursday, August 4, 2022: Open Meeting: 10:15 a.m.–12:00 p.m.; Closed Meeting 12:15 p.m.–1:45 p.m.; Open Meeting: 2:00 p.m.–4:45 p.m.

Friday, August 5, 2022: Open Meeting: 10:45 a.m.–11:45 a.m.; Closed Meeting: 12:00 p.m.–2:00 p.m.; Open Meeting: 2:10 p.m.–3:45 p.m.

August 4, 2022 Meeting

On Thursday, August 4, 2022, the plenary session of the Governing Board meeting will meet in open session from 10:15 a.m. to 12:10 p.m. The meeting will start with Beverly Perdue, Chair of the Governing Board, welcoming members and asking for a motion to approve the August 4–5, 2022 quarterly Governing Board meeting agenda as well as the minutes from the May 12–13, 2022 quarterly Governing Board meeting. Thereafter, from 10:20 a.m. to 12:00 p.m., Charleston Mayor, John Tecklenberg, will welcome the Board, which will precede a panel discussion from South Carolina educators and legislators on the state's education standards and assessment systems.

From 12:15 p.m. to 1:45 p.m., the Board will convene in closed session to receive a briefing on the NAEP Long Term Trend results. This briefing must be held in closed session because results are not yet public. Public disclosure of secure results would impede implementation of the NAEP assessment program if conducted in open session. Such matters are protected by exemption 9(B) of the Government in the Sunshine Act, 5 U.S.C. 552b(c). The closed session will be followed by a 15-minute break.

The Board will reconvene in open session from 2:00 p.m. to 4:45 p.m. Lesley Muldoon, Executive Director of the Governing Board, will update members on ongoing work and Peggy Carr, Commissioner, NCES, will provide an update on NAEP activities. From 2:30 p.m. to 4:00 p.m., members will discuss out-of-school learning opportunities followed by general member discussion from 4:00 p.m. to 4:30 p.m. From 4:30 p.m. to 4:45 p.m., members will hear previews of standing committee meetings that will occur on Friday, August 5, 2022. The August 4, 2022 session of the Board meeting will adjourn at 4:45 p.m.

Friday, August 5, 2022

The August 5, 2022 plenary session will begin with standing committee meetings from 8:30 a.m. to 10:30 a.m. followed by a 15-minute break. From 10:45 a.m. to 11:45 a.m., the Governing Board will hear from leaders of districts participating in the Trial Urban District Assessments (TUDA). Following a 15-minute break, the Board will meet in closed session from 12:00 p.m. to 2:00 p.m. to receive a briefing from NCES on the NAEP budget, followed by small group meetings and report out to the full Board. These sessions must be closed to the public because the budget discussions pertain to current and future NAEP contracts and must be kept confidential to maintain the integrity of the federal acquisition and budget process. Public disclosure of this confidential information would impede implementation of the NAEP assessment program if conducted in open session. Such matters are protected by exemption 9(B) of the Government in the Sunshine Act, 5 U.S.C. 552b(c).

The Board will reconvene in open session from 2:10 p.m. 2:45 p.m. to discuss and act on COSDAM recommendations related to the NAEP achievement level descriptor study in math and reading. From 2:45 p.m. to 3:00 p.m., the Board will discuss and act on the election of the Vice Chair, and approval of the NAEP 2022 Release Plans. From 3:00 p.m. to 3:30 p.m., farewell remarks will be made by departing member Tonya Matthews and any other member whose term(s) of service concludes on September 30, 2022. The August 5, 2022 session of the Governing Board meeting will adjourn at 3:30 p.m.

The quarterly board meeting and standing committee meeting agendas, along with the meeting materials, will be posted on the Governing Board's website at *www.nagb.gov* no later than five working days prior to each meeting.

Instructions for Participating in the Meetings

Registration: Members of the public may attend in-person to all open plenary sessions of the Board's meetings. A link to register for virtual attendance for the open sessions and instructions for how to register will be posted on the Governing Board's website at *www.nagb.gov* no later than 5 business days prior to the meeting. Registration is required to join the meeting virtually.

Public Comment: Written comments related to the work of the Governing Board and its committees at the meeting may be submitted electronically or in hard copy to the attention of the Executive Officer/Designated Federal Official (DFO) via email at *Munira.Mwalimu@ed.gov* no later than 10 business days prior to the meeting. Written comments should be directed to DFO as they relate to committee and Board meeting work referencing the relevant agenda item.

Access to Records of the Meeting: Pursuant to the FACA requirements, the public may inspect the meeting materials at *www.nagb.gov,* which will be made available no later than five business days prior to each meeting. The official verbatim transcripts of the open meeting sessions will be available for public inspection no later than 30 calendar days following each meeting and will be posted on the Governing Board's website. Requests for the

verbatim transcriptions may be made via email to the DFO noted above.

Reasonable Accommodations: The meeting location is accessible to individuals with disabilities. If you will need an auxiliary aid or service to participate in the meeting (*e.g.,* interpreting service, assistive listening device, or materials in an alternate format), notify the DFO listed in this notice no later than ten working days prior to each meeting date.

Electronic Access to this Document: The official version of this document is the document published in the **Federal Register**. Internet access to the official edition of the **Federal Register** and the Code of Federal Regulations is available via the Federal Digital System at: *www.gpo.gov/fdsys.* At this site you can view this document, as well as all other documents of this Department published in the **Federal Register**, in text or Adobe Portable Document Format (PDF). To use PDF, you must have Adobe Acrobat Reader, which is available free at the Adobe website. You may also access documents of the Department published in the **Federal Register** by using the article search feature at: *www.federalregister.gov.* Specifically, through the advanced search feature at this site, you can limit your search to documents published by the Department.

Authority: Pub. L. 107–279, Title III, 301—National Assessment of Educational Progress Authorization Act (20 U.S.C. 9621).

Lesley Muldoon,

Executive Director, National Assessment Governing Board (NAGB), U.S. Department of Education.

[FR Doc. 2022–15647 Filed 7–21–22; 8:45 am]

BILLING CODE 4000–01–P

DEPARTMENT OF EDUCATION

Applications for New Awards; Expanding Opportunity Through Quality Charter Schools Program (CSP)—National Dissemination Grants

AGENCY: Office of Elementary and Secondary Education, Department of Education.

ACTION: Notice.

SUMMARY: The Department of Education (Department) is issuing a notice inviting applications for fiscal year (FY) 2022 for CSP—National Dissemination Grants, Assistance Listing Number 84.282T. This notice relates to the approved information collection under OMB control number 1894–0006.

DATES:

Applications Available: July 22, 2022.

Notice of Intent to Apply: Applicants are strongly encouraged, but not required, to submit a notice of intent to apply by August 8, 2022.

Deadline for Transmittal of Applications: August 22, 2022.

Deadline for Intergovernmental Review: September 20, 2022.

Pre-Application Webinar Information: The CSP intends to hold a pre-application meeting via webinar for prospective applicants. Detailed information regarding this webinar will be provided at *https://oese.ed.gov/offices/office-of-discretionary-grants-support-services/charter-school-programs/expanding-opportunity-through-quality-charter-schools-program-csp-national-dissemination-grants/.*

ADDRESSES: For the addresses for obtaining and submitting an application, please refer to our Common Instructions for Applicants to Department of Education Discretionary Grant Programs, published in the **Federal Register** on December 27, 2021 (86 FR 73264), and available at *www.federalregister.gov/d/2021-27979.* Please note that these Common Instructions supersede the version published on February 13, 2019, and, in part, describe the transition from the requirement to register in SAM.gov a Data Universal Numbering System (DUNS) number to the implementation of the Unique Entity Identifier (UEI). More information on the phase-out of DUNS numbers is available at *www2.ed.gov/about/offices/list/ofo/docs/unique-entity-identifier-transition-fact-sheet.pdf.*

FOR FURTHER INFORMATION CONTACT: Yianni Alepohoritis, U.S. Department of Education, 400 Maryland Avenue SW, Room 3E227, Washington, DC 20202–5970. Telephone: (202) 453–5571. Email: *NDFY22Competition@ed.gov.*

If you are deaf, hard of hearing, or have a speech disability and wish to access telecommunications relay services, please dial 7–1–1.

SUPPLEMENTARY INFORMATION:

Full Text of Announcement

I. Funding Opportunity Description

Purpose of Program: The major purposes of the CSP are to expand opportunities for all students, particularly underserved students, to attend charter schools and meet challenging State academic standards; provide financial assistance for the planning, program design, and initial implementation of public charter schools; increase the number of high-quality charter schools available to students across the United States; evaluate the impact of charter schools on student achievement, families, and communities; share best practices between charter schools and other public schools; aid States in providing facilities support to charter schools; and support efforts to strengthen the charter authorizing process.

Through the CSP National Dissemination Grants (ALN 84.282T), the Department provides funds on a competitive basis to organizations to support the charter school sector and increase the number of high-quality charter schools available to our Nation's students by disseminating best practices regarding charter schools.

Background: This notice invites applications from organizations (*e.g.,* State educational agencies (SEAs); State charter school boards; State Governors; authorized public chartering agencies; charter school support organizations; and public and private nonprofit organizations that operate, manage, or support charter schools) for grants to disseminate best practices of national significance regarding charter schools, including the development, identification, or expansion of such best practices. This notice contains priorities from the Secretary's Final Supplemental Priorities and Definitions for Discretionary Grant Programs published in the **Federal Register** on December 10, 2021 (86 FR 70612) (Supplemental Priorities) as well as definitions and selection criteria from the Elementary and Secondary Education Act of 1965, as amended (ESEA) and Department regulations.

Priorities: This competition includes three absolute priorities. The absolute priorities are from the Supplemental Priorities.

Absolute Priorities: For FY 2022, and any subsequent year in which we make awards from the list of unfunded applications from this competition, these priorities are absolute priorities. Under 34 CFR 75.105(c)(3), we consider only applications that meet one of these priorities. Although a project may address more than one of these priorities, an applicant must clearly identify in its application the specific absolute priority under which it wishes to be considered for funding. These priorities are:

Absolute Priority 1—Addressing the Impact of COVID–19 on Students, Educators, and Faculty.

Projects that are designed to address the impacts of the COVID–19 pandemic, including impacts that extend beyond the duration of the pandemic itself, on the students most impacted by the pandemic, with a focus on underserved students and the educators who serve

them, through one or more of the following priority areas:

(a) Conducting community asset mapping and needs assessments that may include an assessment of the extent to which students, including subgroups of students, have become disengaged from learning, including students not participating in in-person or remote instruction, and specific strategies for reengaging and supporting students and their families;

(b) Providing resources and supports to meet the basic, fundamental health and safety needs of students and educators;

(c) Addressing students' social, emotional, mental health, and academic needs through approaches that are inclusive with regard to race, ethnicity, culture, language, and disability status; or

(d) Using evidence-based instructional approaches and supports, such as professional development, coaching, ongoing support for educators, high-quality tutoring, expanded access to rigorous coursework and content across K–12, and expanded learning time to accelerate learning for students in ways that ensure all students have the opportunity to successfully meet challenging academic content standards without contributing to tracking or remedial courses.

Absolute Priority 2—Supporting a Diverse Educator Workforce and Professional Growth to Strengthen Student Learning.

Projects that are designed to increase the proportion of well-prepared, diverse, and effective educators serving students, with a focus on underserved students, through building or expanding high-poverty school districts' capacity to hire, support, and retain an effective and diverse educator workforce, through providing opportunities for educators to be involved in the design and implementation of local and district wide initiatives that advance systemic changes.

Note: Applicants responding to this Absolute Priority may develop, identify, expand, and disseminate information on best practices for those charter schools that are their own districts.

Absolute Priority 3—Strengthening Cross-Agency Coordination and Community Engagement to Advance Systemic Change.

Projects that are designed to take a systemic evidence-based approach to improving outcomes for underserved students in one or more of the following priority areas:

(a) Conducting community needs and asset mapping to identify existing programs and initiatives that can be leveraged, and new programs and initiatives that need to be developed and implemented, to advance systemic change;

(b) Establishing cross-agency partnerships, or community-based partnerships with local nonprofit organizations, businesses, philanthropic organizations, or others, to meet family well-being needs;

(c) Identifying, documenting, and disseminating policies, strategies, and best practices on effective approaches to creating systemic change through cross-agency or community-based coordination and collaboration; or

(d) Expanding or improving parent and family engagement.

Definitions: The following definitions are from section 4310 of the ESEA (20 U.S.C. 7221i), the Supplemental Priorities, and 34 CFR part 77.

Ambitious means promoting continued, meaningful improvement for program participants or for other individuals or entities affected by the grant or representing a significant advancement in the field of education research, practices, or methodologies. When used to describe a performance target (as defined in this notice), whether a performance target is ambitious depends upon the context of the relevant performance measure (as defined in this notice) and the baseline (as defined in this notice) for that measure. (34 CFR 77.1)

Baseline means the starting point from which performance is measured and targets are set. (34 CFR 77.1)

Charter school means a public school that—

(1) In accordance with a specific State statute authorizing the granting of charters to schools, is exempt from significant State or local rules that inhibit the flexible operation and management of public schools, but not from any rules relating to the other requirements of this definition;

(2) Is created by a developer as a public school, or is adapted by a developer from an existing public school, and is operated under public supervision and direction;

(3) Operates in pursuit of a specific set of educational objectives determined by the school's developer and agreed to by the authorized public chartering agency;

(4) Provides a program of elementary or secondary education, or both;

(5) Is nonsectarian in its programs, admissions policies, employment practices, and all other operations, and is not affiliated with a sectarian school or religious institution; [1]

(6) Does not charge tuition;

(7) Complies with the Age Discrimination Act of 1975, title VI of the Civil Rights Act of 1964, title IX of the Education Amendments of 1972, section 504 of the Rehabilitation Act of 1973, the Americans with Disabilities Act of 1990 (42 U.S.C. 12101 *et seq.*), section 444 of General Education Provisions Act (GEPA) (20 U.S.C. 1232g) (commonly referred to as the ''Family Educational Rights and Privacy Act of 1974''), and part B of the Individuals with Disabilities Education Act (IDEA);

(8) Is a school to which parents choose to send their children, and that—

(i) Admits students on the basis of a lottery, consistent with section 4303(c)(3)(A) of the ESEA, if more students apply for admission than can be accommodated; or

(ii) In the case of a school that has an affiliated charter school (such as a school that is part of the same network of schools), automatically enrolls students who are enrolled in the immediate prior grade level of the affiliated charter school and, for any additional student openings or student openings created through regular attrition in student enrollment in the affiliated charter school and the enrolling school, admits students on the basis of a lottery as described in paragraph (8)(i) of this definition;

(9) Agrees to comply with the same Federal and State audit requirements as do other elementary schools and secondary schools in the State, unless such State audit requirements are waived by the State;

(10) Meets all applicable Federal, State, and local health and safety requirements;

(11) Operates in accordance with State law;

(12) Has a written performance contract with the authorized public chartering agency in the State that includes a description of how student performance will be measured in charter schools pursuant to State assessments that are required of other schools and pursuant to any other assessments mutually agreeable to the authorized public chartering agency and the charter school; and

(13) May serve students in early childhood educational programs or postsecondary students. (ESEA section 4310(2))

Charter school support organization means a nonprofit, nongovernmental

[1] The Department will apply this element of the definition of ''charter school'' consistent with applicable U.S. Supreme Court precedent, including *Trinity Lutheran Church of Columbia, Inc.* v. *Comer,* 137 S.Ct. 2012 (2017), *Espinoza* v. *Montana Department of Revenue,* 140 S.Ct. 2246 (2020), and *Carson* v. *Makin,* 142 S.Ct. 1987 (2022).

entity that is not an authorized public chartering agency and provides, on a statewide basis—

(1) Assistance to developers during the planning, program design, and initial implementation of a charter school; and

(2) Technical assistance to operating charter schools. (ESEA section 4310(4))

Demonstrates a rationale means a key project component (as defined in this notice) included in the project's logic model (as defined in this notice) is informed by research or evaluation findings that suggest the project component is likely to improve relevant outcomes (as defined in this notice). (34 CFR 77.1)

Educator means an individual who is an early learning educator, teacher, principal or other school leader, specialized instructional support personnel (*e.g.,* school psychologist, counselor, school social worker, early intervention service personnel), paraprofessional, or faculty. (Supplemental Priorities)

Evidence-based means the proposed project component is supported by one or more of strong evidence, moderate evidence, promising evidence, or evidence that demonstrates a rationale. (34 CFR 77.1)

High-quality charter school means a charter school that—

(1) Shows evidence of strong academic results, which may include strong student academic growth, as determined by a State;

(2) Has no significant issues in the areas of student safety, financial and operational management, or statutory or regulatory compliance;

(3) Has demonstrated success in significantly increasing student academic achievement, including graduation rates where applicable, for all students served by the charter school; and

(4) Has demonstrated success in increasing student academic achievement, including graduation rates where applicable, for each of the subgroups of students, as defined in section 1111(c)(2) of the ESEA, except that such demonstration is not required in a case in which the number of students in a group is insufficient to yield statistically reliable information or the results would reveal personally identifiable information about an individual student. (ESEA section 4310(8))

Logic model (also referred to as theory of action) means a framework that identifies key project components of the proposed project (*i.e.,* the active ''ingredients'' that are hypothesized to be critical to achieving the relevant outcomes) and describes the theoretical and operational relationships among the key project components and relevant outcomes. (34 CFR 77.1)

Performance measure means any quantitative indicator, statistic, or metric used to gauge program or project performance. (34 CFR 77.1)

Performance target means a level of performance that an applicant would seek to meet during the course of a project or as a result of a project. (34 CFR 77.1)

Project component means an activity, strategy, intervention, process, product, practice, or policy included in a project. Evidence may pertain to an individual project component or to a combination of project components (*e.g.,* training teachers on instructional practices for English learners and follow-on coaching for these teachers). (34 CFR 77.1)

Relevant outcome means the student outcome(s) or other outcome(s) the key project component is designed to improve, consistent with the specific goals of the program. (34 CFR 77.1)

Underserved student means a student (which may include children in early learning environments, students in K–12 programs, students in postsecondary education or career and technical education, and adult learners, as appropriate) in one or more of the following subgroups:

(a) A student who is living in poverty or is served by schools with high concentrations of students living in poverty.

(b) A student of color.

(c) A student who is a member of a federally recognized Indian Tribe.

(d) An English learner.

(e) A child or student with a disability.

(f) A disconnected youth.

(g) A technologically unconnected youth.

(h) A migrant student.

(i) A student experiencing homelessness or housing insecurity.

(j) A lesbian, gay, bisexual, transgender, queer or questioning, or intersex (LGBTQI+) student.

(k) A student who is in foster care.

(l) A student without documentation of immigration status.

(m) A pregnant, parenting, or caregiving student.

(n) A student impacted by the justice system, including a formerly incarcerated student.

(o) A student who is the first in their family to attend postsecondary education.

(p) A student enrolling in or seeking to enroll in postsecondary education for the first time at the age of 20 or older.

(q) A student who is working full-time while enrolled in postsecondary education.

(r) A student who is enrolled in or is seeking to enroll in postsecondary education who is eligible for a Pell Grant.

(s) An adult student in need of improving their basic skills or an adult student with limited English proficiency.

(t) A student performing significantly below grade level.

(u) A military- or veteran-connected student. (Supplemental Priorities)

Application Requirements: Applications submitted must be for activities of national significance related to the development, identification, expansion, and dissemination of best practices regarding charter schools consistent with the absolute priority to which the applicant is responding and that are included in the applicant's proposed project. Applicants are expected to identify the specific costs associated with each included activity.

Program Authority: 4305(a)(3)(B) of the ESEA, 20 U.S.C. 7221d.

Note: Projects will be awarded and must be operated in a manner consistent with the nondiscrimination requirements contained in Federal civil rights laws.

Applicable Regulations: (a) The Education Department General Administrative Regulations in 34 CFR parts 75, 77, 79, 81, 82, 84, 86, 97, 98, and 99. (b) The Office of Management and Budget Guidelines to Agencies on Governmentwide Debarment and Suspension (Nonprocurement) in 2 CFR part 180, as adopted and amended as regulations of the Department in 2 CFR part 3485. (c) The Uniform Administrative Requirements, Cost Principles, and Audit Requirements for Federal Awards in 2 CFR part 200, as adopted and amended as regulations of the Department in 2 CFR part 3474. (d) The Supplemental Priorities.

Note: The regulations in 34 CFR part 79 apply to all applicants except federally recognized Indian Tribes.

II. Award Information

Type of Award: Discretionary grants.

Estimated Available Funds: $4,800,000.

Contingent upon the availability of funds and the quality of applications, we may make additional awards in FY 2023 from the list of unfunded applications from this competition.

Estimated Range of Awards: $500,000–$800,000.

Estimated Average Size of Awards: $650,000 per year.

Estimated Number of Awards: 6–10.

Note: The Department is not bound by any estimates in this notice. The estimated range and average size of awards are based on a single 12-month budget period. We may use FY 2022 funds to support multiple 12-month budget periods for one or more grantees.

Project Period: Up to 36 months.

III. Eligibility Information

1. *Eligible Applicants:* Organizations that may apply for this competition include but are not limited to: SEAs; State charter school boards; State Governors; charter school support organizations (as defined in this notice); authorized public chartering agencies; and public and private nonprofit organizations that operate, manage, or support charter schools.

Entities that apply for this competition may apply as a partnership or consortium and, if so applying, must comply with the requirements for group applications set forth in 34 CFR 75.127–129.

2. a. *Cost Sharing or Matching:* This competition does not require cost sharing or matching.

b. *Supplement-Not-Supplant:* This competition does not involve supplement-not-supplant funding requirements.

c. *Indirect Cost Rate Information:* This program uses an unrestricted indirect cost rate. For more information regarding indirect costs, or to obtain a negotiated indirect cost rate, please see *www2.ed.gov/about/offices/list/ocfo/intro.html.*

d. *Administrative Cost Limitation:* This program does not include any program-specific limitation on administrative expenses. All administrative expenses must be reasonable and necessary and conform to Cost Principles described in 2 CFR part 200 subpart E of the Uniform Guidance.

3. *Subgrants:* A grantee under this competition may not award subgrants to entities to directly carry out project activities described in its application.

IV. Application and Submission Information

1. *Application Submission Instructions:* Applicants are required to follow the Common Instructions for Applicants to Department of Education Discretionary Grant Programs, published in the **Federal Register** on December 27, 2021 (86 FR 73264), and available at *www.federalregister.gov/d/2021-27979,* which contain requirements and information on how to submit an application. Please note that these Common Instructions supersede the version published on February 13, 2019, and, in part, describe the transition from the requirement to register in SAM.gov a DUNS number to the implementation of the UEI. More information on the phase-out of DUNS numbers is available at *www2.ed.gov/about/offices/list/ofo/docs/unique-entity-identifier-transition-fact-sheet.pdf.*

2. *Submission of Proprietary Information:* Given the types of projects that may be proposed in applications for the National Dissemination competition, your application may include business information that you consider proprietary. In 34 CFR 5.11, we define ''business information'' and describe the process we use in determining whether any of that information is proprietary and, thus, protected from disclosure under Exemption 4 of the Freedom of Information Act (5 U.S.C. 552, as amended). Because we plan to make successful applications available to the public, you may wish to request confidentiality of business information.

Consistent with Executive Order 12600, please designate in your application any information that you believe is exempt from disclosure under Exemption 4. In the appropriate Appendix section of your application, under ''Other Attachments Form,'' please list the page number or numbers on which we can find this information. For additional information, please see 34 CFR 5.11(c).

3. *Intergovernmental Review:* This program is subject to Executive Order 12372 and the regulations in 34 CFR part 79. Information about Intergovernmental Review of Federal Programs under Executive Order 12372 is in the application package for this competition. Please note that, under 34 CFR 79.8(a), we have shortened the standard 60-day intergovernmental review period in order to make awards by the end of FY 2022.

4. *Funding Restrictions:* Grantees may not use grant funds to conduct charter school authorizing activities, or to open new charter schools.

Grantees may not use grant funds to acquire or finance the acquisition of a charter school facility, including through credit enhancement, direct lending, or subgrants.

Grantees may not use grant funds for general organizational operating support beyond the costs associated with this grant project.

We reference additional regulations outlining funding restrictions in the *Applicable Regulations* section of this notice.

5. *Recommended Page Limit:* The application narrative is where you, the applicant, address the selection criteria that reviewers use to evaluate your application. We recommend that you (1) limit the narrative to no more than 50 pages, and (2) use the following standards:

- A ''page'' is 8.5″ x 11″, on one side only, with 1″ margins at the top, bottom, and both sides.
- Double-space (no more than three lines per vertical inch) all text in the application narrative, including titles, headings, footnotes, quotations, references, and captions, as well as all text in charts, tables, figures, and graphs.
- Use a font that is either 12 point or larger or no smaller than 10 pitch (characters per inch).
- Use one of the following fonts: Times New Roman, Courier, Courier New, or Arial.

The recommended page limit does not apply to the cover sheet; the budget section, including the narrative budget justification; the assurances and certifications; or the one-page abstract, the resumes, the bibliography, or the letters of support. However, the recommended page limit does apply to all of the application narrative.

6. *Notice of Intent to Apply:* The Department will be able to review grant applications more efficiently if we know the approximate number of applicants that intend to apply. Therefore, we strongly encourage each potential applicant to notify us of their intent to submit an application. To do so, please email the program contact person listed under **FOR FURTHER INFORMATION CONTACT** with the subject line ''Intent to Apply,'' and include the applicant's name, a contact person's name and email address, and the Assistance Listing Number. Applicants that do not submit a notice of intent to apply may still apply for funding.

V. Application Review Information

1. *Selection Criteria:* The selection criteria for this competition are from 34 CFR 75.210. The maximum possible score for addressing all of the criteria in this section is 100 points. The maximum possible score for addressing each criterion is indicated in parentheses following the criterion.

In evaluating an application, the Secretary considers the following criteria:

(a) *Significance of the proposed project (30 points).*

The Secretary considers the significance of the proposed project. In determining the significance of the proposed project, the Secretary considers the following factors:

(1) The national significance of the proposed project (15 points); and

(2) The extent to which the proposed project is likely to build local capacity to provide, improve, or expand services that address the needs of the target population (15 points).

(b) *Quality of the project design (40 points).*

The Secretary considers the quality of the design of the proposed project. In determining the quality of the design of the proposed project, the Secretary considers the following factors:

(1) The extent to which the proposed project demonstrates a rationale (as defined in 34 CFR 77.1(c)) (10 points);

(2) The extent to which the goals, objectives, and outcomes to be achieved by the proposed project are clearly specified and measurable; (10 points);

(3) The extent to which the proposed project represents an exceptional approach to the priority or priorities established for the competition (10 points); and

(4) The mechanisms the applicant will use to broadly disseminate information on its project so as to support further development or replication (10 points).

(c) *Quality of the management plan and adequacy of resources (20 points).*

The Secretary considers the quality of the management plan and adequacy of resources for the proposed project. In determining the quality of the management plan and adequacy of resources for the proposed project, the Secretary considers the following factors:

(1) The adequacy of the management plan to achieve the objectives of the proposed project on time and within budget, including clearly defined responsibilities, timelines, and milestones for accomplishing project tasks (10 points); and

(2) The extent to which the costs are reasonable in relation to the objectives, design, and potential significance of the proposed project (10 points).

(d) *Quality of the project personnel (10 points).*

The Secretary considers the quality of the personnel who will carry out the proposed project. In determining the quality of project personnel, the Secretary considers the following factors:

(1) The extent to which the applicant encourages applications for employment from persons who are members of groups that have traditionally been underrepresented based on race, color, national origin, gender, age, or disability (3 points);

(2) The qualifications, including relevant training and experience, of the project director or principal investigator (4 points); and

(3) The qualifications, including relevant training and experience, of key project personnel (3 points).

2. *Review and Selection Process:* We remind potential applicants that in reviewing applications in any discretionary grant competition, the Secretary may consider, under 34 CFR 75.217(d)(3), the past performance of the applicant in carrying out a previous award, such as the applicant's use of funds, achievement of project objectives, and compliance with grant conditions. The Secretary may also consider whether the applicant failed to submit a timely performance report or submitted a report of unacceptable quality.

In addition, in making a competitive grant award, the Secretary requires various assurances, including those applicable to Federal civil rights laws that prohibit discrimination in programs or activities receiving Federal financial assistance from the Department (34 CFR 100.4, 104.5, 106.4, 108.8, and 110.23).

3. *Risk Assessment and Specific Conditions:* Consistent with 2 CFR 200.206, before awarding grants under this competition, the Department conducts a review of the risks posed by applicants. Under 2 CFR 200.208, the Secretary may impose specific conditions and, under 2 CFR 3474.10, in appropriate circumstances, high-risk conditions on a grant if the applicant or grantee is not financially stable; has a history of unsatisfactory performance; has a financial or other management system that does not meet the standards in 2 CFR part 200, subpart D; has not fulfilled the conditions of a prior grant; or is otherwise not responsible.

4. *Integrity and Performance System:* If you are selected under this competition to receive an award that over the course of the project period may exceed the simplified acquisition threshold (currently $250,000), under 2 CFR 200.206(a)(2), we must make a judgment about your integrity, business ethics, and record of performance under Federal awards—that is, the risk posed by you as an applicant—before we make an award. In doing so, we must consider any information about you that is in the integrity and performance system (currently referred to as the Federal Awardee Performance and Integrity Information System (FAPIIS)), accessible through the System for Award Management. You may review and comment on any information about yourself that a Federal agency previously entered and that is currently in FAPIIS.

Please note that, if the total value of your currently active grants, cooperative agreements, and procurement contracts from the Federal Government exceeds $10,000,000, the reporting requirements in 2 CFR part 200, Appendix XII, require you to report certain integrity information to FAPIIS semiannually. Please review the requirements in 2 CFR part 200, Appendix XII, if this grant plus all the other Federal funds you receive exceed $10,000,000.

5. *In General:* In accordance with the Office of Management and Budget's guidance located at 2 CFR part 200, all applicable Federal laws, and relevant Executive guidance, the Department will review and consider applications for funding pursuant to this notice inviting applications in accordance with—

(a) Selecting recipients most likely to be successful in delivering results based on the program objectives through an objective process of evaluating Federal award applications (2 CFR 200.205);

(b) Prohibiting the purchase of certain telecommunication and video surveillance services or equipment in alignment with section 889 of the National Defense Authorization Act of 2019 (Pub. L. 115–232) (2 CFR 200.216);

(c) Providing a preference, to the extent permitted by law, to maximize use of goods, products, and materials produced in the United States (2 CFR 200.322); and

(d) Terminating agreements in whole or in part to the greatest extent authorized by law if an award no longer effectuates the program goals or agency priorities (2 CFR 200.340).

VI. Award Administration Information

1. *Award Notices:* If your application is successful, we notify your U.S. Representative and U.S. Senators and send you a Grant Award Notification (GAN); or we may send you an email containing a link to access an electronic version of your GAN. We may notify you informally, also.

If your application is not evaluated or not selected for funding, we notify you.

2. *Administrative and National Policy Requirements:* We identify administrative and national policy requirements in the application package and reference these and other requirements in the *Applicable Regulations* section of this notice.

We reference the regulations outlining the terms and conditions of an award in the *Applicable Regulations* section of this notice and include these and other specific conditions in the GAN. The GAN also incorporates your approved application as part of your binding commitments under the grant.

3. *Open Licensing Requirements:* Unless an exception applies, if you are awarded a grant under this competition,

you will be required to openly license to the public grant deliverables created in whole, or in part, with Department grant funds. When the deliverable consists of modifications to pre-existing works, the license extends only to those modifications that can be separately identified and only to the extent that open licensing is permitted under the terms of any licenses or other legal restrictions on the use of pre-existing works. Additionally, a grantee or subgrantee that is awarded competitive grant funds must have a plan to disseminate these public grant deliverables. This dissemination plan can be developed and submitted after your application has been reviewed and selected for funding. For additional information on the open licensing requirements, please refer to 2 CFR 3474.20.

4. *Reporting:* (a) If you apply for a grant under this competition, you must ensure that you have in place the necessary processes and systems to comply with the reporting requirements in 2 CFR part 170 should you receive funding under the competition. This does not apply if you have an exception under 2 CFR 170.110(b).

(b) At the end of your project period, you must submit a final performance report, including financial information, as directed by the Secretary. If you receive a multiyear award, you must submit an annual performance report that provides the most current performance and financial expenditure information as directed by the Secretary under 34 CFR 75.118. The Secretary may also require more frequent performance reports under 34 CFR 75.720(c). For specific requirements on reporting, please go to *www.ed.gov/fund/grant/apply/appforms/appforms.html.*

(c) Under 34 CFR 75.250(b), the Secretary may provide a grantee with additional funding for data collection analysis and reporting. In this case, the Secretary establishes a data collection period.

5. *Performance Measures:* Applicants must propose project-specific performance measures and performance targets consistent with the objectives of the proposed project and the project outcomes identified in the logic model. The project-specific performance measures should be sufficient to gauge progress throughout the grant period, at least on an annual basis, and to show results by the end of the grant period. Applicants must provide the following information as directed under 34 CFR 75.110(b) and (c):

(1) *Performance measures.* How each proposed performance measure would accurately measure the performance of the project and how the proposed performance measure would be consistent with the performance measures established for the program funding the competition.

(2) *Baseline data.* (i) Why each proposed baseline is valid; or (ii) If the applicant has determined that there are no valid, established baseline data for a particular performance measure, an explanation of why there is no established baseline and of how and when, during the project period, the applicant would establish a valid baseline for the performance measure.

(3) *Performance targets.* Why each proposed performance target is ambitious (as defined in this notice) yet achievable compared to the baseline for the performance measure and when, during the project period, the applicant would meet the performance target(s).

(4) *Data collection and reporting.* (i) The data collection and reporting methods the applicant would use and why those methods are likely to yield reliable, valid, and meaningful performance data; and (ii) The applicant's capacity to collect and report reliable, valid, and meaningful performance data, as evidenced by high-quality data collection, analysis, and reporting in other projects or research.

All grantees must submit an annual performance report with information that is responsive to these performance measures.

For technical assistance in developing effective performance measures, applicants are encouraged to review information provided by the Department's Regional Educational Laboratories (RELs). The RELs seek to build the capacity of States and school districts to incorporate data and research into education decision making. Each REL provides research support and technical assistance to its region but makes learning opportunities available to educators everywhere. For example, the REL Northeast and Islands has created the following resource on logic models: *https://ies.ed.gov/ncee/edlabs/regions/northeast/pdf/REL_2015057.pdf.*

6. *Continuation Awards:* In making a continuation award under 34 CFR 75.253, the Secretary considers, among other things: whether a grantee has made substantial progress in achieving the goals and objectives of the project; whether the grantee has expended funds in a manner that is consistent with its approved application and budget; and, if the Secretary has established performance measurement requirements, whether the grantee has made substantial progress in achieving the performance targets in the grantee's approved application.

In making a continuation award, the Secretary also considers whether the grantee is operating in compliance with the assurances in its approved application, including those applicable to Federal civil rights laws that prohibit discrimination in programs or activities receiving Federal financial assistance from the Department (34 CFR 100.4, 104.5, 106.4, 108.8, and 110.23).

7. *Project Director's Meeting:* Applicants approved for funding under this competition must attend a two-day meeting for project directors at a location to be determined in the continental United States during each year of the project. Applicants may include the cost of attending this meeting in their proposed budgets.

VII. Other Information

Accessible Format: On request to the program contact person listed under **FOR FURTHER INFORMATION CONTACT**, individuals with disabilities can obtain this document and a copy of the application package in an accessible format. The Department will provide the requestor with an accessible format that may include Rich Text Format (RTF) or text format (txt), a thumb drive, an MP3 file, braille, large print, audiotape, or compact disc, or other accessible format.

Electronic Access to This Document: The official version of this document is the document published in the **Federal Register**. You may access the official edition of the **Federal Register** and the Code of Federal Regulations at *www.govinfo.gov.* At this site, you can view this document, as well as all other documents of this Department published in the **Federal Register**, in text or Portable Document Format (PDF). To use PDF, you must have Adobe Acrobat Reader, which is available free at the site.

You may also access documents of the Department published in the **Federal Register** by using the article search feature at *www.federalregister.gov.* Specifically, through the advanced search feature at this site, you can limit your search to documents published by the Department.

Ruth E. Ryder,

Deputy Assistant Secretary for Policy and Programs Office of Elementary and Secondary Education.

[FR Doc. 2022–15826 Filed 7–21–22; 8:45 am]

BILLING CODE 4000–01–P

DEPARTMENT OF EDUCATION

[Docket No.: ED–2022–SCC–0065]

Agency Information Collection Activities; Submission to the Office of Management and Budget for Review and Approval; Comment Request; FERPA and PPRA E-Complaint Forms

AGENCY: Office of Management (OM), Department of Education (ED).

ACTION: Notice.

SUMMARY: In accordance with the Paperwork Reduction Act of 1995, ED is proposing an extension without change of a currently approved information collection.

DATES: Interested persons are invited to submit comments on or before August 22, 2022.

ADDRESSES: Written comments and recommendations for proposed information collection requests should be sent within 30 days of publication of this notice to *www.reginfo.gov/public/do/PRAMain.* Find this information collection request (ICR) by selecting ''Department of Education'' under ''Currently Under Review,'' then check ''Only Show ICR for Public Comment'' checkbox. *Reginfo.gov* provides two links to view documents related to this information collection request. Information collection forms and instructions may be found by clicking on the ''View Information Collection (IC) List'' link. Supporting statements and other supporting documentation may be found by clicking on the ''View Supporting Statement and Other Documents'' link.

IComments may also be sent to *ICDocketmgr@ed.gov*.

FOR FURTHER INFORMATION CONTACT: For specific questions related to collection activities, please contact Frank Miller, 202–453–6631.

SUPPLEMENTARY INFORMATION: The Department, in accordance with the Paperwork Reduction Act of 1995 (PRA) (44 U.S.C. 3506(c)(2)(A)), provides the general public and Federal agencies with an opportunity to comment on proposed, revised, and continuing collections of information. This helps the Department assess the impact of its information collection requirements and minimize the public's reporting burden. It also helps the public understand the Department's information collection requirements and provide the requested data in the desired format. ED is soliciting comments on the proposed ICR that is described below. The Department is especially interested in public comment addressing the following issues: (1) is this collection necessary to the proper functions of the Department; (2) will this information be processed and used in a timely manner; (3) is the estimate of burden accurate; (4) how might the Department enhance the quality, utility, and clarity of the information to be collected; and (5) how might the Department minimize the burden of this collection on the respondents, including through the use of information technology. Please note that written comments received in response to this notice will be considered public records.

Title of Collection: FERPA and PPRA E-Complaint Forms.

OMB Control Number: 1880–0544.

Type of Review: An extension without change of a currently approved information collection.

Respondents/Affected Public: Individuals and Households.

Total Estimated Number of Annual Responses: 500.

Total Estimated Number of Annual Burden Hours: 500.

Abstract: The Student Privacy Policy Office (SPPO) reviews, investigates, and processes complaints of alleged violations of Family Education Rights and Privacy Act (FERPA) and Protection of Pupil Rights Amendment (PPRA) filed by parents and eligible students. SPPO's authority to investigate, review, and process complaints extends to allegations of violations of FERPA by any recipient of Unites States Department of Education (Department) funds under a program administered by the Secretary (*e.g.,* schools, school districts, postsecondary institutions, state educational agencies, and other third parties that receive Department funds).

Dated: July 19, 2022.

Stephanie Valentine,

PRA Coordinator, Strategic Collections and Clearance Governance and Strategy Division, Office of Chief Data Officer. Office of Planning, Evaluation and Policy Development.

[FR Doc. 2022–15712 Filed 7–21–22; 8:45 am]

BILLING CODE 4000–01–P

DEPARTMENT OF ENERGY

[Case Number 2022–004; EERE–2022–BT–WAV–0010]

Energy Conservation Program: Notification of Petition for Waiver of Norlake, Inc., dba Refrigerated Solutions Group, From the Department of Energy Walk-In Coolers and Walk-In Freezers Test Procedure and Notification of Grant of Interim Waiver

AGENCY: Office of Energy Efficiency and Renewable Energy, Department of Energy.

ACTION: Notification of petition for waiver and grant of an interim waiver; request for comments.

SUMMARY: This notification announces receipt of and publishes a petition for waiver and interim waiver from Norlake, Inc., dba Refrigerated Solutions Group (''RSG''), which seeks a waiver for specified walk-in cooler and walk-in freezer (''walk-in'') refrigeration system basic models from the U.S. Department of Energy (''DOE'') test procedure used for determining the efficiency of walk-in refrigeration systems. DOE also gives notification of an Interim Waiver Order that requires RSG to test and rate the specified walk-in basic models in accordance with the alternate test procedure set forth in the Interim Waiver Order. DOE solicits comments, data, and information concerning RSG's petition and its suggested alternate test procedure so as to inform DOE's final decision on RSG's waiver request.

DATES: Written comments and information are requested and will be accepted on or before August 22, 2022.

ADDRESSES: Interested persons are encouraged to submit comments using the Federal eRulemaking Portal at *www.regulations.gov* under docket number EERE–2022–BT–WAV–0010. Alternatively, interested persons may submit comments, identified by docket number EERE–2022–BT–WAV–0010, by any of the following methods:

1. *Email:* to *RSGWICF2022WAV0010@ee.doe.gov.* Include docket number EERE–2022–BT–WAV–0010 in the subject line of the message.

2. *Postal Mail:* Appliance and Equipment Standards Program, U.S. Department of Energy, Building Technologies Office, Mailstop EE–5B, 1000 Independence Avenue SW, Washington, DC 20585–0121. Telephone: (202) 287–1445. If possible, please submit all items on a compact disc (''CD''), in which case it is not necessary to include printed copies.

3. *Hand Delivery/Courier:* Appliance and Equipment Standards Program, U.S.

Department of Energy, Building Technologies Office, 950 L'Enfant Plaza SW, 6th Floor, Washington, DC 20024. Telephone: (202) 287–1445. If possible, please submit all items on a CD, in which case it is not necessary to include printed copies.

No telefacsimiles (''faxes'') will be accepted. For detailed instructions on submitting comments and additional information on this process, see the **SUPPLEMENTARY INFORMATION** section of this document.

Docket: The docket, which includes **Federal Register** notices, comments, and other supporting documents/materials, is available for review at *www.regulations.gov.* All documents in the docket are listed in the *www.regulations.gov* index. However, some documents listed in the index, such as those containing information that is exempt from public disclosure, may not be publicly available.

The docket web page can be found at *www.regulations.gov/document/EERE-2022-BT-WAV-0010-0001.* The docket web page contains instruction on how to access all documents, including public comments, in the docket. See the **SUPPLEMENTARY INFORMATION** section for information on how to submit comments through *www.regulations.gov.*

FOR FURTHER INFORMATION CONTACT:

Ms. Julia Hegarty, U.S. Department of Energy, Office of Energy Efficiency and Renewable Energy, Building Technologies Office, Mailstop EE–5B, 1000 Independence Avenue SW, Washington, DC 20585–0121. Telephone: (240) 597–6737. Email: *AS_Waiver_Request@ee.doe.gov.*

Mr. Michael Kido, U.S. Department of Energy, Office of the General Counsel, Mail Stop GC–33, Forrestal Building, 1000 Independence Avenue SW, Washington, DC 20585–0103. Telephone: (202) 586–8145. Email: *Michael.Kido@hq.doe.gov.*

SUPPLEMENTARY INFORMATION: DOE is publishing RSG's petition for waiver in its entirety, pursuant to 10 CFR 431.401(b)(1)(iv).[1] DOE is also publishing the Interim Waiver Order granted RSG, which serves as notification of DOE's determination regarding RSG's petition for an interim waiver, pursuant to 10 CFR 431.401(e)(3). DOE invites all interested parties to submit in writing by August 22, 2022, comments and information on all aspects of the petition, including the alternate test procedure. Pursuant to 10 CFR 431.401(d), any person submitting written comments to DOE must also send a copy of such comments to the petitioner. The contact information for the petitioner is Mr. Bill Larson, *bilarson@refsg.com.*

Submitting comments via www.regulations.gov. The *www.regulations.gov* web page will require you to provide your name and contact information. Your contact information will be viewable to DOE Building Technologies staff only. Your contact information will not be publicly viewable except for your first and last names, organization name (if any), and submitter representative name (if any). If your comment is not processed properly because of technical difficulties, DOE will use this information to contact you. If DOE cannot read your comment due to technical difficulties and cannot contact you for clarification, DOE may not be able to consider your comment.

However, your contact information will be publicly viewable if you include it in the comment or in any documents attached to your comment. Any information that you do not want to be publicly viewable should not be included in your comment, nor in any document attached to your comment. If this instruction is followed, persons viewing comments will see only first and last names, organization names, correspondence containing comments, and any documents submitted with the comments.

Do not submit to *www.regulations.gov* information for which disclosure is restricted by statute, such as trade secrets and commercial or financial information (hereinafter referred to as Confidential Business Information (''CBI'')). Comments submitted through *www.regulations.gov* cannot be claimed as CBI. Comments received through the website will waive any CBI claims for the information submitted. For information on submitting CBI, see the Confidential Business Information section.

DOE processes submissions made through *www.regulations.gov* before posting. Normally, comments will be posted within a few days of being submitted. However, if large volumes of comments are being processed simultaneously, your comment may not be viewable for up to several weeks. Please keep the comment tracking number that *www.regulations.gov* provides after you have successfully uploaded your comment.

Submitting comments via email, hand delivery/courier, or postal mail. Comments and documents submitted via email, hand delivery/courier, or postal mail also will be posted to *www.regulations.gov.* If you do not want your personal contact information to be publicly viewable, do not include it in your comment or any accompanying documents. Instead, provide your contact information on a cover letter. Include your first and last names, email address, telephone number, and optional mailing address. The cover letter will not be publicly viewable as long as it does not include any comments.

Include contact information each time you submit comments, data, documents, and other information to DOE. If you submit via postal mail or hand delivery/courier, please provide all items on a CD, if feasible, in which case it is not necessary to submit printed copies. Faxes will not be accepted.

Comments, data, and other information submitted to DOE electronically should be provided in PDF (preferred), Microsoft Word or Excel, WordPerfect, or text (ASCII) file format. Provide documents that are not secured, written in English and free of any defects or viruses. Documents should not contain special characters or any form of encryption and, if possible, they should carry the electronic signature of the author.

Campaign form letters. Please submit campaign form letters by the originating organization in batches of between 50 to 500 form letters per PDF or as one form letter with a list of supporters' names compiled into one or more PDFs. This reduces comment processing and posting time.

Confidential Business Information. According to 10 CFR 1004.11, any person submitting information that he or she believes to be confidential and exempt by law from public disclosure should submit via email two well-marked copies: one copy of the document marked confidential including all the information believed to be confidential, and one copy of the document marked ''non-confidential'' with the information believed to be confidential deleted. Submit these documents via email. DOE will make its own determination about the confidential status of the information and treat it according to its determination.

It is DOE's policy that all comments may be included in the public docket, without change and as received, including any personal information provided in the comments (except information deemed to be exempt from public disclosure).

[1] The petition did not identify any of the information contained therein as confidential business information.

Case Number 2022–004

Interim Waiver Order

I. Background and Authority

The Energy Policy and Conservation Act, as amended (''EPCA''),[2] authorizes the U.S. Department of Energy (''DOE'') to regulate the energy efficiency of a number of consumer products and certain industrial equipment. (42 U.S.C. 6291–6317) Title III, Part C[3] of EPCA established the Energy Conservation Program for Certain Industrial Equipment, which sets forth a variety of provisions designed to improve energy efficiency for certain types of industrial equipment. This equipment includes walk-in coolers and walk-in freezers (''walk-ins''), the focus of this document. (42 U.S.C. 6311(1)(G))

The energy conservation program under EPCA consists essentially of four parts: (1) testing, (2) labeling, (3) Federal energy conservation standards, and (4) certification and enforcement procedures. Relevant provisions of EPCA include definitions (42 U.S.C. 6311), energy conservation standards (42 U.S.C. 6313), test procedures (42 U.S.C. 6314), labeling provisions (42 U.S.C. 6315), and the authority to require information and reports from manufacturers (42 U.S.C. 6316).

The Federal testing requirements consist of test procedures that manufacturers of covered equipment must use as the basis for: (1) certifying to DOE that their equipment complies with the applicable energy conservation standards adopted pursuant to EPCA (42 U.S.C. 6316(a); 42 U.S.C. 6295(s)), and (2) making representations about the efficiency of that equipment (42 U.S.C. 6314(d)). Similarly, DOE must use these test procedures to determine whether the equipment complies with relevant standards promulgated under EPCA. (42 U.S.C. 6316(a); 42 U.S.C. 6295(s))

Under 42 U.S.C. 6314, EPCA sets forth the criteria and procedures DOE is required to follow when prescribing or amending test procedures for covered equipment. EPCA requires that any test procedures prescribed or amended under this section must be reasonably designed to produce test results which reflect the energy efficiency, energy use or estimated annual operating cost of covered equipment during a representative average use cycle and requires that test procedures not be unduly burdensome to conduct. (42 U.S.C. 6314(a)(2)) The test procedure used to determine the net capacity and annual walk-in energy factor (''AWEF'') of walk-in refrigeration systems is contained in the Code of Federal Regulations (''CFR'') at 10 CFR part 431, subpart R, appendix C, *Uniform Test Method for the Measurement of Net Capacity and AWEF of Walk-in Cooler and Walk-in Freezer Refrigeration Systems*'' (''appendix C to subpart R'').

Under 10 CFR 431.401, any interested person may submit a petition for waiver from DOE's test procedure requirements. DOE will grant a waiver from the test procedure requirements if DOE determines either that the basic model(s) for which the waiver was requested contains a design characteristic that prevents testing of the basic model according to the prescribed test procedures, or that the prescribed test procedures evaluate the basic model in a manner so unrepresentative of its true energy or water consumption characteristics as to provide materially inaccurate comparative data. 10 CFR 431.401(f)(2). A petitioner must include in its petition any alternate test procedures known to the petitioner to evaluate the performance of the equipment type in a manner representative of the energy and/or water consumption characteristics of the basic model. 10 CFR 431.401(b)(1)(iii). DOE may grant the waiver subject to conditions, including adherence to alternate test procedures. 10 CFR 431.401(f)(2).

As soon as practicable after the granting of any waiver, DOE will publish in the **Federal Register** a notice of proposed rulemaking to amend its regulations so as to eliminate any need for the continuation of such waiver. 10 CFR 431.401(*l*) As soon thereafter as practicable, DOE will publish in the **Federal Register** a final rule to that effect. *Id.*

The waiver process also provides that DOE may grant an interim waiver if it appears likely that the underlying petition for waiver will be granted and/or if DOE determines that it would be desirable for public policy reasons to grant immediate relief pending a determination on the petition for waiver. 10 CFR 431.401(e)(3). Within one year of issuance of an interim waiver, DOE will either: (i) publish in the **Federal Register** a determination on the petition for waiver; or (ii) publish in the **Federal Register** a new or amended test procedure that addresses the issues presented in the waiver. 10 CFR 431.401(h)(1).

If the interim waiver test procedure methodology is different than the decision and order test procedure methodology, certification reports to DOE required under 10 CFR 429.12 and any representations must be based on either of the two methodologies until 180–360 days after the publication date of the decision and order, as specified by DOE in the decision and order. Thereafter, certification reports and any representations must be based on the decision and order test procedure methodology, unless otherwise specified by DOE. 10 CFR 431.401(i). When DOE amends the test procedure to address the issues presented in a waiver, the waiver will automatically terminate on the date on which use of that test procedure is required to demonstrate compliance. 10 CFR 431.401(h)(2).

II. RSG's Petition for Waiver and Interim Waiver

On February 17, 2022, DOE received from RSG a petition for waiver and interim waiver from the test procedure for walk-in refrigeration systems set forth at 10 CFR part 431 subpart R appendix C. (RSG, No. 1, attachment 1, at pp. 1–3[4]) Pursuant to 10 CFR 431.401(e)(i), DOE posted the petition on the DOE website. The petition did not identify any of the information contained therein as confidential business information.

DOE's current test procedure for walk-in refrigeration systems is codified in appendix C to subpart R of part 431 and incorporates by reference Air-Conditioning, Heating, and Refrigeration Institute (''AHRI'') Standard 1250–2009 (*2009 Standard for Performance Rating of Walk-In Coolers and Freezers,* ''AHRI 1250–2009''), AHRI Standard 420–2008 (*Performance Rating of Forced-Circulation Free-Delivery Unit Coolers for Refrigeration,* ''AHRI 420–2008''), and American Society of Heating, Refrigerating, and Air-Conditioning Engineers (''ASHRAE'') Standard 23.1–2010 (*Methods of Testing for Rating the Performance of Positive Displacement Refrigerant Compressors and Condensing Units that Operate at Subcritical Temperatures of the Refrigerant,* ''ASHRAE 23.1–2010''). AHRI 1250–2009 is the industry test standard for refrigeration systems for

[2] All references to EPCA in this document refer to the statute as amended through the Energy Act of 2020, Public Law 116–260 (Dec. 27, 2020), which reflect the last statutory amendments that impact Parts A and A–1 of EPCA.

[3] For editorial reasons, upon codification in the U.S. Code, Part C was redesignated as Part A–1.

[4] A notation in this form provides a reference for information that is in the docket for this test procedure waiver (Docket No. EERE–2022–BT–WAV–0010–0001) (available at *www.regulations.gov/document/EERE-2022-BT-WAV-0010-0001*). This notation indicates that the statement preceding the reference is from document number 1 in the docket and appears at pages 1–3 of attachment 1 of that document. There are two attachments to document 1 of this docket. Attachment 1 is titled ''DOE Waiver 021722.'' Attachment 2 is titled ''RSG DOE Single Package System Alternate Test Procedure 021522''.

walk-in coolers and freezers, including unit coolers and dedicated condensing units sold separately, as well as matched pairs. The procedure describes the method for measuring the refrigeration capacity and the electrical energy consumption for walk-in refrigeration systems. Using the refrigeration capacity and electrical energy consumption, AHRI 1250–2009 provides a calculation methodology to compute AWEF, the applicable energy-performance metric for refrigeration systems.

In its petition for waiver and interim waiver, RSG presents several ways in which the currently prescribed test procedure would evaluate the specified basic models in a manner so unrepresentative of their true energy consumption as to provide materially inaccurate comparative data. These issues are summarized below.

First, as presented in RSG's petition, the specified basic models of walk-in refrigeration systems are single-packaged dedicated systems that contain multiple refrigeration circuits that operate using a single power feed. (RSG, No. 1, attachment 1, at p. 1) RSG claimed that the specified basic models meet the definition of a single-packaged dedicated system. *Id.* DOE defines a single-packaged dedicated system as ''a single-package assembly that includes one or more compressors, a condenser, a means for forced circulation of refrigerated air, and elements by which heat is transferred from air to refrigerant, without any element external to the system imposing resistance to flow of the refrigerated air''. *See* 10 CFR 431.302. As described by RSG, each refrigeration circuit in the specified basic models is made up of a compressor, expansion device, condenser, and evaporator. (RSG, No. 1, attachment 1, at p. 1) The separate refrigeration circuits may share condenser fans, evaporator fans and a control system. *Id.* In its request for waiver and interim waiver, RSG stated that neither appendix C to subpart R nor AHRI 1250–2009 provide a method for testing a single-packaged dedicated system with multiple refrigeration circuits. *Id.*

Second, RSG stated that the current test procedure requires that the unit under test be set up using a 25-foot line set. *Id.* Section 3.3 of appendix C to subpart R provides the test method for matched systems, single-packaged dedicated systems, and unit coolers tested alone, which references AHRI 1250–2009. Section C5 (Methods of Testing for Walk-In Cooler and Freezer Systems that Have Matched Unit Coolers and Condensing Units) of AHRI 1250–2009 references test setup requirements that include the addition of a line set that includes either one or two mass flow meters. Under Section C5 of AHRI 1250–2009, the gross refrigeration capacity must be determined either by the dual instrumentation refrigerant enthalpy method (Section C5.1.1 of AHRI 1250–2009, Method 1) or by the calibrated box method (Section C5.1.2 of AHRI 1250–2009, Method 2). Both methods require installation of a refrigerant mass flow meter in the system's liquid line to determine the cooling capacity. Section C8.3 and Figure C1 of AHRI 1250–2009 specify the setup and measurements to be conducted for Method 1, for which 25-feet of additional refrigerant line is added to connect the condenser to the evaporator (unit cooler). Within this 25-foot line, two mass flow meters are incorporated, and the heat balance calculated from the two flow measurements must be within ±5 percent. Section C9.2 and Figure C2 of AHRI 1250–2009 specify the setup and measurements for Method 2, in which 26-feet of additional refrigerant line is added to connect the condenser to the unit cooler (as for Method 1), incorporating one mass flow meter. Air-side gross refrigeration capacity and refrigerant-side gross refrigeration capacity are determined and must be equal to within ±5 percent for the test to be considered valid. The 25-foot and 26-foot [5] of additional liquid line and suction line piping used to set up the test is termed a ''line-set''. In its petition for wavier and interim waiver, RSG stated that single-packaged dedicated systems are not intended to be remotely split via a line-set. (RSG, No. 1, attachment 1, at p. 1)

In its request for wavier and interim wavier, RSG noted that DOE has issued test procedure waivers for single-packaged dedicated refrigeration systems using air enthalpy test methods. (RSG, No. 1, attachment 1, at p. 2) DOE granted a waiver to Store It Cold for single-packaged units on August 9, 2019. 84 FR 39286. Store It Cold petitioned for a waiver after determining that the dual instrumentation refrigerant enthalpy method specified in AHRI 1250–2009 was not providing consistent capacity measurements for its single-packaged dedicated systems. 84 FR 39286, 39287. The alternate test procedure associated with this prior waiver required that the specified single-packaged basic models shall be tested using the Indoor Air Enthalpy Method and the Outdoor Air Enthalpy Method in accordance with ASHRAE 37 (*Methods of Testing for Rating Electrically Driven Unitary Air-Conditioning and Heat-Pump Equipment,* ''ASHRAE 37''). 84 FR 39286, 39292. DOE also granted waivers to Air Innovations, CellarPro, Vinotemp, and Vinotheque for walk-in refrigeration systems used in wine cellar applications, for which some of the basic models included in these waivers were single-packaged dedicated systems.[6] The alternate test methods included in these waivers require the specified basic models to be tested in accordance with AHRI 1250–2020, which references the air enthalpy methods in ASHRAE 37 for testing single-packaged dedicated systems.[7] Use of air enthalpy methods for testing a single-packaged dedicated system capture the impact of thermal loss and the infiltration of warm air into the evaporator portion of these systems, which increases the refrigerant load on the system. In its petition for waiver and interim waiver, RSG stated that its laboratory is not set up to conduct air enthalpy testing, and that it would require substantial time and expense to set up its laboratory to conduct air enthalpy testing. (RSG, No. 1, attachment 1, at p. 2) Additionally, RSG explained that it contacted third-party labs to inquire about testing single-packaged dedicated systems using the air enthalpy method, but these labs responded that they are not currently able to conduct air enthalpy testing. *Id.*

Third, in its request for waiver and interim waiver from the DOE test procedure, RSG stated that the current tolerance requirement of 0.5 °F for the on-coil temperature in Section C3.3.3 of AHRI 1250–2009 is unrealistic. *Id.* RSG stated that indoor air temperature tolerances impact the on-coil temperatures and that the test procedure currently prescribes a 1 °F indoor air temperature test condition tolerance.[8] *Id.* RSG therefore suggested that the on-coil temperature tolerance should also be

[5] There is no explanation in AHRI 1250–2009 about why Method 1 requires 25 feet of refrigeration line and Method 2 requires 26 feet of refrigeration line during test set up.

[6] See Waiver Decision and Orders for Air Innovations (86 FR 23702 (May 4, 2021)), CellarPro (86 FR 26496 (May 14, 2021)), Vinotheque (86 FR 26504 (May 14, 2021)), and Vinotemp (86 FR 36732 (July 13, 2021)).

[7] Subsequent to DOE's grant of waiver to Store It Cold, AHRI published an updated version of AHRI 1250 (*i.e.,* AHRI 1250–2020) that provides testing provisions for single-packaged dedicated systems that incorporate by reference the approach used in ASHRAE 37 with some modification.

[8] Test condition tolerance is the maximum allowed deviation of the average of the measurements of a parameter made during a test period as compared with its target value. The indoor air dry-bulb test condition tolerance is specified as 1 °F in Table 2 of AHRI 1250–2009.

1 °F. *Id.* RSG noted further that it can be difficult to repeatedly achieve an on-coil temperature tolerance of 0.5 °F when units are shut down, re-plumbed, and recharged for testing. *Id.*

RSG also requested an interim waiver from the existing DOE test procedure, explaining that if DOE were to deny its application for waiver and interim waiver, it would experience economic hardship in the form of lost sales and/or a significant delay in the distribution into commerce of the specified basic models. *Id.* DOE will grant an interim waiver if it appears likely that the petition for waiver will be granted, and/or if DOE determines that it would be desirable for public policy reasons to grant immediate relief pending a determination of the petition for waiver. 10 CFR 431.401(e)(3).

III. Requested Alternate Test Procedure

EPCA requires that manufacturers use DOE test procedures when making representations about the energy consumption and energy consumption costs of covered equipment. (42 U.S.C. 6314(d)) Consistency is important when making representations about the energy efficiency of covered equipment, including when demonstrating compliance with applicable DOE energy conservation standards. Pursuant to 10 CFR 431.401, and after consideration of public comments on the petition, DOE may establish in a subsequent Decision and Order an alternate test procedure for the basic models addressed by the Interim Waiver Order.

RSG seeks to use an alternate test procedure to test and rate specific walk-in single-packaged dedicated refrigeration system basic models. The alternate test procedure presented by RSG suggested the following revisions to the DOE test procedure that would:

(1) Modify test operating and test condition tolerances in AHRI 1250–2009, which the DOE test procedure references in section 3.1, *General modifications: Test Conditions and Tolerances;*

(2) Remove section 3.2.5 from the DOE test procedure, which provides additional specificity to the refrigerant line setup required in AHRI 1250–2009 section C8.3; and

(3) Create a new section 4 in the DOE test procedure that provides modifications to AHRI 1250–2009 and includes a new approach for testing multiple-circuit single-packaged dedicated systems. Specifically, RSG has suggested an alternate test procedure for testing single-packaged dedicated systems using a modified refrigerant enthalpy approach applied to multiple refrigeration circuits. (RSG, No. 1, attachment 2, at pp. 1–13).

In its request for waiver and interim waiver, RSG suggested testing single-packaged dedicated systems using either a modification of the calibrated box method described in Section C9 of AHRI 1250–2009 or the indoor air enthalpy method (as described in Section C9.1.1 of AHRI 1250–2020) as the primary test method and a new ''single-package refrigerant enthalpy method'' as the secondary test method. (RSG, No. 1, attachment 2, at p. 3) Specifically, RSG recommended the following approach for the new single-package refrigerant enthalpy method:

(1) Instead of using a 25-foot line set with two mass flow meters as specified in the dual instrumentation refrigerant enthalpy method (see Section C8 of AHRI 1250–2009), RSG suggested using only one mass flow meter in the liquid line between the heat exchanger and the expansion device. (RSG, No. 1, attachment 1, at p. 1)

(2) In its alternate test procedure, RSG suggested incorporating the mass flow meter with less than or equal to 5 feet of additional insulated refrigerant line (with piping matching that of the system under test) to the liquid line. *Id.*

(3) The existing suction line would be undisturbed for the test. *Id.*

(4) The added refrigerant charge for the 5 feet of additional liquid line and the mass flow meter would be determined using Section C3.3.3 of AHRI 1250–2009 of the current test procedure. *Id.*

Before disassembling the refrigeration system to set up the refrigerant-side mass flow measurement, a preliminary test at Condition A would be conducted using only a modified calibrated box method or the indoor air enthalpy method. (RSG, No. 1, attachment 1, at p. 3) For this test, surface-mounted temperature sensors would be installed on the evaporator and condenser coils, tubing entering and leaving the compressor, and tubing entering the expansion device. *Id.* To limit the alteration of the refrigerant circuit, the new suggested single-packaged refrigeration enthalpy method would add only 5 feet of tubing to the liquid refrigerant lines (not including the flow length associated with the mass flow meter). (RSG, No. 1, attachment 2, at p. 4) To ensure that the refrigerant circuit modifications (*i.e.,* addition of the mass flow meter and additional liquid line) do not materially alter the system operation, a secondary test would be performed after adding the mass flow meter to confirm that (1) each on-coil temperature sensor indicates a reading that is within ±1 °F of its initial test measurement, (2) the temperatures of the refrigerant entering and leaving the compressor are within ±4 °F of the initial test measurement, and (3) the refrigerant temperature entering the expansion device is within ±1 °F of the initial test measurement. Both the preliminary Condition A test and the secondary test would be additions to the current test procedure and provide a check that the modifications to the refrigeration circuit do not significantly impact the operation of the unit.

The heat balance applied to single-packaged dedicated systems using this method would involve comparison of the air-side net capacity to a net capacity determined based on the refrigerant enthalpy method capacity measurement that would include adjustment for the evaporator fan heat in addition to adjustment for the single-packaged dedicated system thermal loss. The thermal loss would be calculated similarly to the duct loss calculation of Section 7.3.3.3 of ASHRAE 37–2009, in which the heat losses associated with the insulated surface areas subject to heat transfer are summed based on their surface area, thermal resistance (which is based on known insulating material and insulation thickness), and the temperatures on either side of the surface. A test is considered valid if the refrigerant capacities determined by each method are within 6 percent of each other. This approach is generally consistent to the current DOE test procedure, which requires that the capacities determined from two tests are within 5 percent in order for the test to be considered valid.

RSG's suggestion to use the calibrated box method with a single-packaged dedicated system involves mounting the system on the calibrated box, similar to its installation on a walk-in for field use and exchanging air with the box interior to cool it. The exterior of the calibrated box would be conditioned such that the air conditions entering the single-packaged dedicated system's condenser match the targets specified in RSG's suggested revisions to Tables 3, 4, 7 and 8 of AHRI 1250–2009. DOE notes that the table revisions suggested by RSG are consistent with previous single-packaged dedicated system waivers (*see, e.g.,* the Store It Cold waiver, 84 FR 39286, 39291 (August 9, 2019)). The warm condensing unit portion of the single-packaged dedicated system and its condenser discharge air may in some cases add to the thermal load imposed on the calibrated box. Therefore, RSG has suggested additional optional test methods to quantify this additional thermal load on the calibrated box, and to adjust for it when determining system

capacity. The suggested additional test method to determine the additional thermal load calls for box calibration and box load determination to be based on temperature sensors mounted on the box exterior surface rather than by measuring air temperature just outside the box (the approach described for the calibrated box method in Section C9 of AHRI 1250–2009). In addition, requirements for temperature sensor placement to measure the surfaces that may be hot during system operation, and equations for adjustment of the calculated box transmission load contributing to the capacity determination were provided by RSG. (RSG, No. 1, attachment 2, at p. 11)

In its request for waiver and interim waiver, RSG also provided instructions for extending the modified refrigerant enthalpy method of the alternate test procedure to testing multiple-circuit single-packaged dedicated systems. (RSG, No. 1, attachment 2, at p. 9) The approach involves measuring refrigerant mass flow and the enthalpy entering and leaving the evaporator for each refrigeration circuit contained in the unit. The measured mass flow and enthalpy values are used to calculate the gross refrigeration capacity for each circuit. Each circuit's gross capacity is then summed to determine the total gross capacity of the system, which would be adjusted to determine net capacity as described above for testing a single-circuit system.

IV. Interim Waiver Order

DOE has reviewed RSG's application for waiver and interim waiver and the alternate test procedure requested by RSG. Based on the assertions in the petition, the DOE test procedure for walk-in cooler refrigeration systems would evaluate the subject basic models in a manner so unrepresentative of its true energy consumption characteristics as to provide materially inaccurate comparative data.

DOE notes that its current test procedure for walk-in refrigeration systems specifies, through reference to appendix C of AHRI 1250–2009, determining the capacity of the unit under test by using either the dual instrumentation refrigerant enthalpy method (*i.e.,* Method 1 in Section C8 of AHRI 1250–2009) or the calibrated box method (*i.e.,* Method 2 in Section C9 of AHRI 1250–2009). Two capacity measurements are obtained from either Method 1 or Method 2 and the determined capacities must be within ±5 percent of each other for a valid test (see AHRI 1250–2009, Section C8.5.3 for Method 1 and Section C9.4.5 for Method 2). The dual instrumentation refrigerant enthalpy method is routinely used to evaluate the capacity of matched pair, dedicated condensing, and unit cooler systems, but DOE understands that this method is generally considered to be impractical for testing single-packaged dedicated systems. This is primarily because it requires breaking into the liquid refrigerant line within the packaged unit, routing the line outside of the unit to pass through two mass flow meters, and then routing the line back into the unit and through dual pressure and temperature measurements before it rejoins the original liquid line at the expansion device inlet. This method is generally inappropriate for single-packaged dedicated systems because the internal volume of the added liquid line and mass flow meters adds substantially to the required refrigerant charge, and the entire assembly adds substantial pressure drop.[9]

As discussed, RSG's request for waiver and interim waiver stated that the dual instrumentation refrigerant enthalpy method is not appropriate for testing single-packaged dedicated systems because these systems are not designed to have significant additional refrigerant line added between the condenser and evaporator. RSG also stated that the single-packaged dedicated system test methods in AHRI 1250–2020 result in a significant test burden if a testing facility is not currently set up for air enthalpy testing. Therefore, in its suggested alternate test procedure, RSG presented an approach for testing single-packaged dedicated systems using the calibrated box method (Method 2 of AHRI 1250–2009) with modifications that allow a liquid refrigerant line no longer than 5 feet to be incorporated into the existing refrigerant line with a mass flow meter. The method suggested by RSG would make no changes to the vapor refrigeration line. Based on its review of proprietary data from RSG, DOE has initially determined that these changes included in the alternate test procedure recommended by RSG provide a realistic approach for using refrigerant enthalpy to determine the capacity of single-packaged dedicated systems.

The refrigerant enthalpy method does not account for thermal losses, which are specific to single-packaged dedicated systems because the evaporator, rather than being installed entirely inside the cold walk-in box, is housed in an insulated compartment that is externally exposed to warm outdoor air on several sides and to the hot condensing unit compartment on another side. To address this, RSG has adjusted the capacity determined by the new single-package refrigerant enthalpy method to account for thermal losses. Based on its review of RSG's suggested alternate test method, DOE has initially determined that these capacity adjustments result in representative measures of capacity.

In its petition for waiver, RSG specified that the new single-package refrigerant method would be considered a secondary method (*i.e.,* results would be used to ensure the capacity tolerance is met when compared to the capacity determined by a primary test method but would not be used for rating performance). DOE has initially determined that specifying use of the new single-package refrigerant enthalpy method as a secondary method is appropriate since capacity is not directly determined by this method (but rather is estimated through the application of thermal loss adjustments, as described).

The primary test method recommended by RSG in its alternate test procedure is the calibrated box test. Although the calibrated box test is not included in the list of test methods for single-packaged dedicated systems in Table C4 of AHRI 1250–2020, DOE notes that the calibrated box method and the indoor room calorimeter method (from Table C4 of AHRI 1250–2020) are very similar, since the capacity measurement is based on the heat input into a room and the calibrated thermal transmission is achieved through use of a ''box'' or ''room.'' Similarly, the indoor air enthalpy method (from Table C4 of AHRI 1250–2020) captures the capacity actually delivered to the air that conditions the walk-in box. The alternate test methods in the test procedure waivers that DOE previously granted for certain single-packaged dedicated systems rely on the indoor room calorimeter method and the indoor air enthalpy method. Given the similarities between these methods, DOE expects that the calibrated box method will provide capacity measurements that are comparable to those obtained using the indoor air enthalpy method or the indoor room calorimeter method. Because these methods account for the thermal losses associated with single-packaged dedicated systems using direct measurement rather than duct loss calculations, DOE has initially determined that it is appropriate that the calibrated box method would be considered to be the primary test

[9] These issues were the primary motivation for and are described in the Store It Cold petition for waiver. 84 FR 11944, 11946.

method (*i.e.,* the capacity determined from this method would be used for rating purposes).

In its recommended alternate test procedure, RSG recommended a 6 percent tolerance between the proposed calibrated box and new single-package refrigerant enthalpy methods. Based on its review of the alternate test procedure provided by RSG, DOE has initially determined that the alternate test procedure submitted by RSG in its petition for waiver and interim waiver provides representative capacity measurements that result in representative AWEF values for single-packaged dedicated systems.

DOE's current test procedure does not provide a method for testing single-packaged dedicated systems with multiple refrigeration circuits. RSG's suggested alternate test procedure would determine the gross refrigeration capacity for each circuit using the earlier described single-package refrigerant enthalpy method and summing these capacities to determine the total system capacity. Based on DOE's review of the alternate test procedure provided by RSG, DOE has initially determined that this is an appropriate and representative approach for determining the performance of multiple-circuit refrigeration systems.

As previously discussed, RSG's suggested alternate test method would modify the test operating and test condition tolerances in section 3.1 of the DOE test procedure (which references AHRI 1250–2009); remove section 3.2.5 from the DOE test procedure, which provides additional specificity to the refrigerant line setup required in AHRI 1250–2009 section C8.3; and create a new section 4 in the DOE test procedure that provides a detailed method for testing multiple-circuit single-packaged dedicated systems. After review, DOE has initially determined that it will specify an alternate test procedure that generally follows the same approach as that recommended by RSG for the interim waiver test procedure, but with one modification, as described follows.

The alternate test procedure submitted by RSG includes suggested revisions to AHRI 1250–2009. However, DOE notes that there is one inconsistency between RSG's alternate test procedure and AHRI 1250–2020. Specifically, the alternate test procedure suggested by RSG modifies Table 7 of AHRI 1250–2009 (Fixed Capacity Matched Freezer System, Condensing Unit Located Indoors) to require the condenser air entering wet-bulb temperature to be 68 °F for single-packaged dedicated systems that do not use evaporative dedicated condensing units, for which all or part of the equipment is located in the outdoor room. (RSG, No. 1, attachment 2, at p. 1) However, Table 8 of AHRI 1250–2020 requires that the condenser air entering wet-bulb temperature must be 65 °F for single-packaged dedicated systems that do not use evaporative dedicated condensing units, for which all or part of the equipment is located in the outdoor room. DOE has modified the condensing air entering wet-bulb temperature in Table 7 of RSG's recommended alternate test procedure to be 65 °F (rather than 68 °F as suggested by RSG) in order to maintain consistency with the requirements in Table 8 of AHRI 1250–2020.

DOE has initially determined that the alternate test procedure (as modified in the manner noted), appears to allow for the accurate measurement of the energy efficiency of the specified basic models, while alleviating the testing problems cited by RSG in its attempts to implement the DOE test procedure for these basic models. Consequently, DOE has determined that RSG's petition for waiver, with the modification as described in this section, likely will be granted. Furthermore, DOE has determined that it is desirable for public policy reasons to grant RSG immediate relief pending a determination of the petition for waiver.

For the reasons stated, it is *ordered* that:

(1) RSG must test and rate the following Norlake and Masterbilt basic models with the alternate test procedure set forth in paragraph (2).

Cooler basic models	Freezer basic models
CPB050PC–S–0	CPF050PC–S–0
CPB075PC–S–0	CPF075PC–S–0
CPB100PC–S–0	CPF100PC–S–0
	CPF150PC–S–4
	CPF200PC–S–4

(2) The alternate test procedure for the RSG basic models identified in paragraph (1) of this Interim Waiver Order is the test procedure for walk-in refrigeration systems prescribed by DOE at 10 CFR part 431, subpart R, appendix C (''Appendix C to Subpart R''), except that multiple circuit single-packaged dedicated systems shall use: (1) either the calibrated box method or an indoor air enthalpy test as the primary test method, as detailed below; (2) the modified refrigerant enthalpy method as the secondary test method, as detailed below; (3) the net capacity from the primary and secondary test methods must agree within ±6 percent, as detailed below; and (4) reported values for the overall system shall be the summation of the gross capacities obtained from the modified refrigerant enthalpy method conducted for each refrigeration circuit included in the unit under test, as detailed below. All other requirements of appendix C to subpart R and DOE's regulations remain applicable.

In Appendix C to Subpart R:

Revise section 3.1.1 to read as follows:

3.1.1. In Table 1 of AHRI 1250–2009, Instrumentation Accuracy, refrigerant temperature measurements shall have a tolerance of ±0.5 °F for unit cooler in/out. Temperature measurements used to determine water vapor content of the air shall be accurate to within ±0.4 °F. All other temperature measurements shall be accurate to ±1.0 °F.

Revise section 3.1.4 to read as follows:

3.1.4. In Tables 2 through 14 of AHRI 1250–2009, the Test Condition Outdoor Wet Bulb Temperature requirement and its associated tolerance apply only to units with evaporative cooling and single-packaged dedicated systems.

Insert new section 3.1.6 as follows:

3.1.6 Tables 3, 4, 7 and 8 of AHRI 1250–2009 shall be modified to read as follows:

TABLE 3—FIXED CAPACITY MATCHED REFRIGERATOR SYSTEM, CONDENSING UNIT LOCATED INDOOR

Test description	Unit cooler air entering dry-bulb (°F)	Unit cooler air entering relative humidity (%)	Condenser air entering dry-bulb (°F)	Condenser air entering wet-bulb (°F)	Compressor capacity	Test objective
Off Cycle Fan Power	35	<50			Compressor Off	Measure fan input wattage during compressor off cycle.

TABLE 3—FIXED CAPACITY MATCHED REFRIGERATOR SYSTEM, CONDENSING UNIT LOCATED INDOOR—Continued

Test description	Unit cooler air entering dry-bulb (°F)	Unit cooler air entering relative humidity (%)	Condenser air entering dry-bulb (°F)	Condenser air entering wet-bulb (°F)	Compressor capacity	Test objective
Refrigeration Capacity	35	<50	90	[1] 75 or [2] 65	Compressor On	Determine Net Refrigeration Capacity of Unit Cooler, input power, and EER at Rating Condition.

[1] Required only for evaporative Dedicated Condensing Units.
[2] Maximum allowable value for Single-Packaged Dedicated Systems that do not use evaporative Dedicated Condensing Units, where all or part of the equipment is located in the outdoor room.

TABLE 4—FIXED CAPACITY MATCHED REFRIGERATOR SYSTEM, CONDENSING UNIT LOCATED OUTDOOR

Test description	Unit cooler air entering dry-bulb (°F)	Unit cooler air entering relative humidity (%)	Condenser air entering dry-bulb (°F)	Condenser air entering wet-bulb (°F)	Compressor capacity	Test objective
Off Cycle Fan Power	35	<50			Compressor Off	Measure fan input wattage during compressor off cycle.
Refrigeration Capacity A	35	<50	95	[1] 75 or [2] 68	Compressor On	Determine Net Refrigeration Capacity of Unit Cooler, input power, and EER at Rating Condition.
Refrigeration Capacity B	35	<50	59	[1] 54 or [2] 46	Compressor On	Determine Net Refrigeration Capacity of Unit Cooler, and system input power at moderate condition.
Refrigeration Capacity C	35	<50	35	[1] 34 or [2] 29	Compressor On	Determine Net Refrigeration Capacity of Unit Cooler, and system input power at cold condition.

[1] Required only for evaporative Dedicated Condensing Units.
[2] Maximum allowable value for Single-Packaged Dedicated Systems that do not use evaporative Dedicated Condensing Units, where all or part of the equipment is located in the outdoor room.

TABLE 7—FIXED CAPACITY MATCHED FREEZER SYSTEM, CONDENSING UNIT LOCATED INDOOR

Test description	Unit cooler air entering dry-bulb (°F)	Unit cooler air entering relative humidity (%)	Condenser air entering dry-bulb (°F)	Condenser air entering wet-bulb (°F)	Compressor capacity	Test objective
Off Cycle Fan Power	−10	<50			Compressor Off	Measure fan input wattage during compressor off cycle.
Refrigeration Capacity	−10	<50	90	[1] 75 or [2] 65	Compressor On	Determine Net Refrigeration Capacity of Unit Cooler, input power, and EER at Rating Condition.
Defrost Frost Load	−10	Various	90	[1] 75 or [2] 65	System Dependent	Test according to Section C11 of AHRI 1250–2009.

[1] Required only for evaporative Dedicated Condensing Units.
[2] Maximum allowable value for Single-Packaged Dedicated Systems that do not use evaporative Dedicated Condensing Units, where all or part of the equipment is located in the outdoor room.

TABLE 8—FIXED CAPACITY MATCHED FREEZER SYSTEM, CONDENSING UNIT LOCATED OUTDOOR

Test description	Unit cooler air entering dry-bulb (°F)	Unit cooler air entering relative humidity (%)	Condenser air entering dry-bulb (°F)	Condenser air entering wet-bulb (°F)	Compressor capacity	Test objective
Off Cycle Fan Power	−10	<50			Compressor Off	Measure fan input wattage during compressor off cycle.
Refrigeration Capacity A	−10	<50	95	[1] 75 or [2] 68	Compressor On	Determine Net Refrigeration Capacity of Unit Cooler, input power, and EER at Rating Condition.
Refrigeration Capacity B	−10	<50	59	54[1] or [2] 46	Compressor On	Determine Net Refrigeration Capacity of Unit Cooler, input power, and EER at Rating Condition.

TABLE 8—FIXED CAPACITY MATCHED FREEZER SYSTEM, CONDENSING UNIT LOCATED OUTDOOR—Continued

Test description	Unit cooler air entering dry-bulb (°F)	Unit cooler air entering relative humidity (%)	Condenser air entering dry-bulb (°F)	Condenser air entering wet-bulb (°F)	Compressor capacity	Test objective
Refrigeration Capacity C	−10	<50	35	[1] 34 or [2] 29	Compressor On	Determine Net Refrigeration Capacity of Unit Cooler, input power, and EER at Rating Condition.
Defrost Frost Load	−10	Various	95	[1] 75 or [2] 68	System Dependent	Test according to Section C11 of AHRI 1250–2009.

[1] Required only for evaporative Dedicated Condensing Units.
[2] Maximum allowable value for Single-Packaged Dedicated Systems that do not use evaporative Dedicated Condensing Units, where all or part of the equipment is located in the outdoor room.

Remove section 3.2.5.

Add a new section 4, following section 3.5 *Hot Gas Defrost Refrigeration Systems*

4.0 Multiple-Circuit Single-Packaged Dedicated Systems

When conducting testing in accordance with AHRI 1250–2009 (incorporated by reference; see 10 CFR 431.303), the following modifications must be made.

4.1 Specific modifications: Test Conditions and Tolerance

4.1.1 Replace Section C3.1.2 of AHRI 1250–2009 with the following: Air wet-bulb and dry-bulb temperatures entering the Single-Packaged Dedicated System at its evaporator return and condenser air inlet shall be measured based on the airflow area at the point of measurement. One measuring station is required for each 2.0 ft^2 of the first 10.0 ft^2 of airflow area and one additional measuring station is required for each 4.0 ft^2 of airflow area above 10.0 ft^2. A minimum of two stations shall be used and the number of measuring stations shall be rounded up to the next whole number.

4.1.2 Replace Section C3.1.5 of AHRI 1250–2009 with the following: If sampling tubes are used, each tube opening may be considered a temperature measuring station provided the openings are uniformly spaced along the tube, the airflow rates entering each port are relatively uniform (±15%) and the arrangement of tubes complies with the location requirements of Section C3.1.2 of AHRI 1250–2009. Additionally, a one-time temperature traverse shall be made over the measurement surface, prior to the tests to assess the temperature variation and ensure it complies with the allowable deviation specified in Section C3.1.4 of AHRI 1250–2009. (Refer to ANSI/ASHRAE Standard 41.1 for more information and diagrams). If sampling tubes are not used for single-packaged dedicated systems that do not use evaporative dedicated condensing units, a single air wet-bulb or RH sensor may be used. When used, this sensor shall be located at the geometric center of the largest condenser coil face and 6–12 inches from the condenser coil.

4.1.3 Replace Section 3.1.6 of AHRI 1250–2009 with the following: Refrigerant temperatures entering and leaving the evaporator section of the Single-Packaged Dedicated System shall be measured by a temperature measuring instrument placed in a thermometer well and inserted into the refrigerant stream. These wells shall be filled with non-solidifying, thermal conducting liquid or paste to ensure the temperature sensing instrument is exposed to a representative temperature. The entering temperature of the refrigerant shall be measured within six pipe diameters upstream of the expansion device. If the refrigerant tube outer diameter is less than ½-inch, the refrigerant temperature may be measured using the average of two temperature measuring instruments with a minimum accuracy of ±0.5 °F placed on opposite sides of the refrigerant tube surface. In this case, the refrigerant tube shall be insulated with 1-inch-thick insulation from a point 6 inches upstream of the measurement location to a point 6 inches downstream of the measurement location. Also, the entering measurement location may be moved to a location 6 inches upstream of the expansion device.

4.2 Refrigerant Properties Measurement

4.2.1 Replace Section C3.3.1 of AHRI 1250–2009 with the following: With the equipment operating at the desired test conditions, the temperature and pressure of the refrigerant leaving the unit cooler, entering the expansion device, and entering and leaving the compressor shall be measured. For cases where the calibrated box method or indoor air enthalpy method is also conducted, data used to calculate capacity according to the single-package refrigerant enthalpy method and the additional method shall be collected over the same intervals.

4.2.2 Replace Section C3.3.3 of AHRI 1250–2009 with the following: For Single-Packaged Dedicated Systems tested using either the calibrated box method or the indoor air enthalpy method as the primary measurement and the single-package refrigerant enthalpy method as the secondary method, a preliminary test for Rating Condition A using the primary method is required prior to setting up the refrigerant enthalpy method measurements. In preparation for this preliminary test, temperature sensors shall be attached to the equipment's evaporator and condenser coils. The sensors shall be located at points that are not affected by vapor superheat or liquid subcooling. Placement near the midpoint of the coil, at a return bend, is recommended. The preliminary test shall be conducted with the requirement that the temperatures of the on-coil sensors be included with the regularly recorded data. After the preliminary test is completed, the refrigerant shall be removed from the equipment, and the refrigerant enthalpy measurement setup shall be completed. The equipment shall be evacuated and recharged with refrigerant. The test shall then be repeated. Once steady-state operation is achieved, refrigerant shall be added or removed until, as compared to the average values from the preliminary test, the following conditions are achieved: (1) each on-coil temperature sensor indicates a reading that is within ±1.0 °F, (2) the temperatures of the refrigerant entering and leaving the compressor are within ±4.0 °F, and (3) the refrigerant temperature entering the expansion device is within ±1.0 °F. Once these conditions have been achieved over an interval of at least ten minutes, refrigerant charging equipment

shall be removed, and the remaining tests shall be conducted.

4.2.3 When conducting the refrigerant enthalpy method for a Single-Packaged Dedicated System, the length of the added liquid line conducting refrigerant out of the system, to the flow meter, and back into the system shall be no more than 5 feet. No such modification to the suction line shall be made.

4.3 Methods for Testing for Walk-In Cooler and Freezer Systems That Have Matched Unit Coolers and Condensing Units

Disregard Section C5 of AHRI 1250–2009 and instead test according to the following method:

4.3.1 The Refrigeration Capacity for Single-Packaged Dedicated Systems shall be determined using either the Calibrated Box method or the Indoor Air Enthalpy method as a primary test method and the Single-Package Refrigerant Enthalpy method as the secondary test method.

4.3.1.1 Single-Package Refrigerant Enthalpy method shall determine gross refrigeration capacity by measuring the enthalpy change and the mass flow rate of the refrigerant using a single set of measurements.

4.3.1.2 Calibrated Box method shall determine net refrigeration capacity by measuring the heat input to the calibrated box, including thermal transfer through the calibrated box walls.

4.3.2 Indoor Air Enthalpy method shall determine net refrigeration capacity of Single-Packaged Dedicated System and input power in accordance with ASHRAE 37–2009, Figure C4 of AHRI 1250–2020, and the following modifications.

4.3.2.1 Net refrigeration capacity is determined by measuring airflow rate and the dry-bub temperature and water vapor content of the air that enters and leaves the coil.

4.3.2.2 Air enthalpies shall be determined in accordance with ANSI/ASHRAE 41.6. Entering air is to be sufficiently dry as to not produce frost on the evaporator coil. Therefore, only sensible capacity measured by dry bulb change shall be used to calculate capacity.

4.3.3 Testing Sequence. The primary test method shall be used to measure the capacity for Rating Condition A prior to set-up of the Single-Package Refrigerant Enthalpy Measurement. After set-up of the Refrigerant Enthalpy method, the Net Capacity shall be measured using both the primary test method and the Refrigerant Enthalpy method. The Net Capacity measurement using the Refrigerant Enthalpy method shall be within 6 percent of the net capacity measurement using the primary method.

If a capacity balance within tolerance is not initially achieved, take steps to reduce the thermal losses of the Single-Packaged Dedicated System evaporator compartment by sealing air gaps and potentially adding more external insulation. If using the Calibrated Box method as the primary method, achieving a capacity balance may require conducting the calibration with calibrated box insulation material at the same average temperature as during capacity measurement, or using multiple calibrations conducted at different average insulation material temperatures and using these data to construct a correlation for the calibration coefficient, K_{cb}, as a function of average insulation temperature. The official performance measurements are based on the primary method testing without any air gap sealing and additional external insulation used to achieve the 6 percent energy balance in place.

4.3.4 The refrigerant enthalpy method Net Capacity shall be calculated from the Gross Capacity Measurement as follows.

$$\dot{q}_{ss,2} = \dot{Q}_{ref} - 3.412 \times \dot{E}F_{comp,on} - \dot{Q}_{sploss}$$

Where $\dot{Q}_{sploss}$ represents the Single-Packaged Dedicated System thermal losses through the walls of the evaporator side of the Single-Packaged Dedicated System to the condenser side and to the exterior ambient, and shall be calculated as follows.

$$\dot{Q}_{sploss} = UA_{cond} \times (T_{condside} - T_{evapside}) + UA_{amb} \times (T_{amb} - T_{evapside})$$

Where:

UA_{cond} and UA_{amb} are, for the condenser/evaporator partition and the evaporator compartment walls exposed to ambient air, respectively, the product of the overall heat transfer coefficient and surface area of the unit as manufactured, *i.e.,* without external insulation that might have been added during the test;

$T_{evapside}$ is the air temperature in the evaporator compartment;

$T_{condside}$ is the air temperature in the condenser compartment; and

T_{amb} is the air temperature outside the Single-Packaged Dedicated System.

The Net Capacity to be used in AWEF calculations shall be the net capacity measured using the primary method.

4.3.5 Upon the completion of the Rating Condition A steady state test, an off-cycle evaporator fan power test shall be conducted to measure the evaporator fan power consumption during a compressor-off period in accordance with Section C10 of AHRI 1250–2009.

4.3.6 Upon the completion of the Rating Condition A steady state test for walk-in freezer systems, a mandatory defrost test shall be conducted to establish the energy input for a defrost cycle.

4.3.7 Upon the completion of the Rating Condition A steady state test, off-cycle evaporator fan power test, and defrost test (for walk-in freezer systems), the Rating Condition B and C steady state tests shall be conducted. Capacity balance as described in Section C9.2 of AHRI 1250–2020 for Rating Condition A is not required for Rating Conditions B and C.

4.4 Test Chamber Requirements

Disregard Section C6 of AHRI 1250–2009 and instead test according to the following method:

4.4.1 For single-packaged dedicated systems, test chamber requirements shall be as follows:

a. For the calibrated box method, follow ASHRAE 16–2016, Section 6.1 for calibrated type calorimeters excluding water and water energy inputs for the indoor-side compartment.

b. For the indoor air enthalpy method, follow ASHRAE 37–2009.

4.5 Single-Packaged Dedicated System Refrigerant Enthalpy Method

4.5.1 General Description. In this method, capacity is determined from the refrigerant enthalpy change and flow rate. Enthalpy changes are determined from measurements of entering and leaving pressures and temperatures of the refrigerant, and the flow rate is determined by a suitable flow meter in the liquid line. This method shall not be used for tests in which the refrigerant liquid leaving the flow meter is subcooled less than 3.0 °F or for tests in which any instantaneous measurement of the superheat of the vapor leaving the evaporator coil is less than 5.0 °F. Supplementary cooling may be artificially provided for the liquid line to ensure enough subcooling when making measurements to establish the capacity balance for Rating Condition A, however, no official measurements used to calculate AWEF may be made while providing such supplementary cooling.

4.5.2 Measurements. Refer to Section 4.1 of this appendix and Section C3 of AHRI 1250–2009 for requirements of air-side and refrigerant-side measurements.

4.5.3 Test Setup and Procedure. Refer to Section 4.4 of this appendix, Section C7 of AHRI 1250–2009, and Figure C3 of this section for specific test setup. The lengths of the added liquid line shall be a maximum of 5 feet.

BILLING CODE 6450–01–P

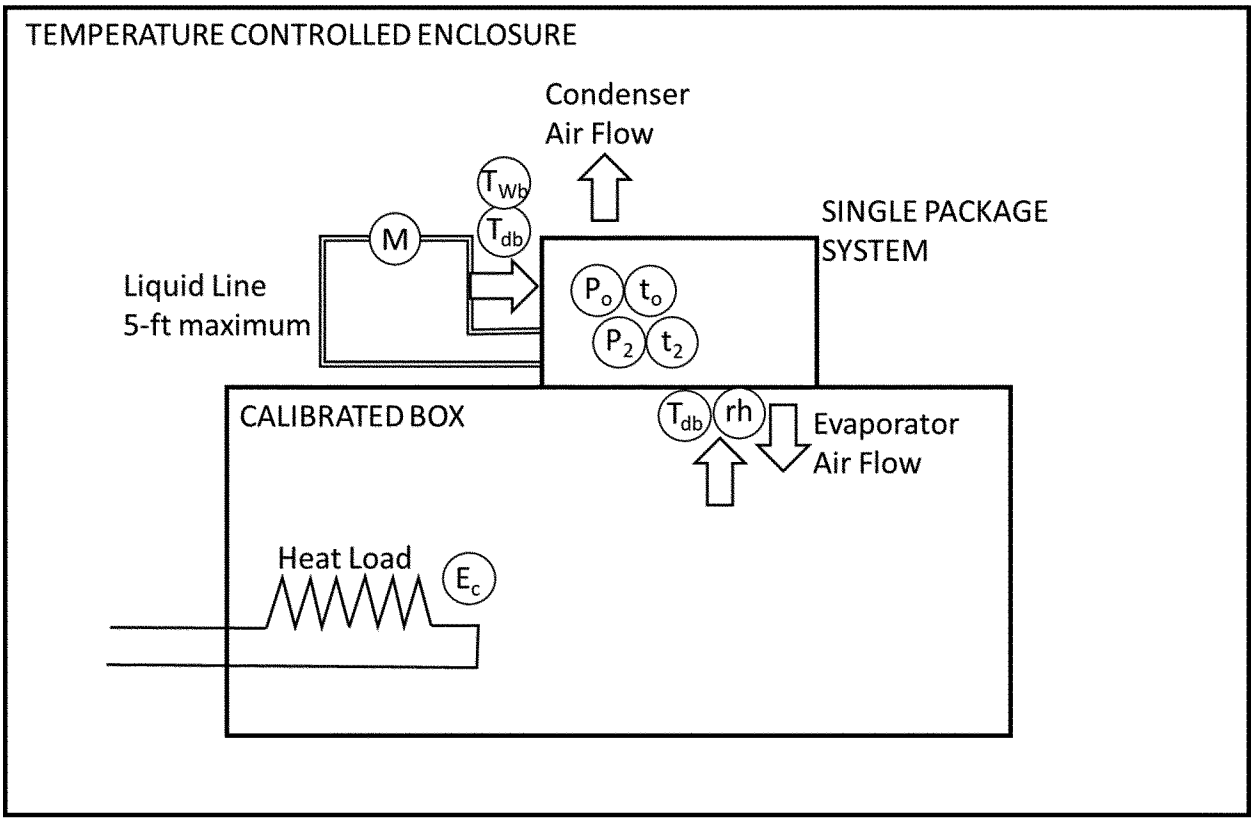

LEGEND	
M	Mass Flow Meter
T_{db} T_{Wb}	Air Temperature Measurement Station
rh	Air Relative Humidity Measurement
P	Refrigerant Pressure Measurement
t	Refrigerant Temperature Measurement Station
E_c	Heat Load Input Power

Figure C3: Calibrated Box and Single-package Refrigerant Enthalpy Method

4.5.4 Data to be Measured and Recorded. Refer to ''Refrigerant Enthalpy Method'' in Table C2 in Section C7.2 of AHRI 1250–2009 for the required data that need to measured and recorded, except as follows.

4.5.4.1 Water vapor content of air entering the unit cooler (evaporator) and condensing unit may be measured using a wet bulb temperature measurement or a relative humidity sensor, but both are not required.

4.5.4.2 Wet bulb temperature of air leaving the unit cooler (evaporator) and condensing unit need not be measured.

4.5.4.3 Required refrigerant pressure measurement includes only subcooled liquid entering the expansion valve and superheated vapor exiting the unit cooler (evaporator).

4.5.4.4 Only one refrigerant mass flow measurement is required.

4.5.4.5 Measurement of Refrigerant oil flow rate and oil/refrigerant mass ratio are not required.

4.5.5 Refrigeration Capacity Calculation.

4.5.5.1 The refrigerant-side gross capacity is calculated by

$$\dot{Q}_{ref} = \dot{m}_{ref}(h_{out} - h_{in})$$

4.5.5.2 Measurement of Capacity for a Single-Packaged Dedicated System with Multiple Refrigeration Circuits.

For a Single-Packaged Dedicated System with multiple refrigeration circuits, apply the refrigerant enthalpy method separately for each circuit and sum the separately measured gross refrigeration capacities.

4.6 Calibrated Box Test Procedure

4.6.1 Measurements. Refer to Section 4.1 of this section and Section C3 of AHRI 1250–2009 for requirements of air-side and refrigerant-side measurements.

4.6.2 Apparatus setup for Calibrated Box Calibration and Test. Refer to Section 4.4 of this section, Section C7 of AHRI 1250–2009, and Figure C4 of this section for specific test setup.

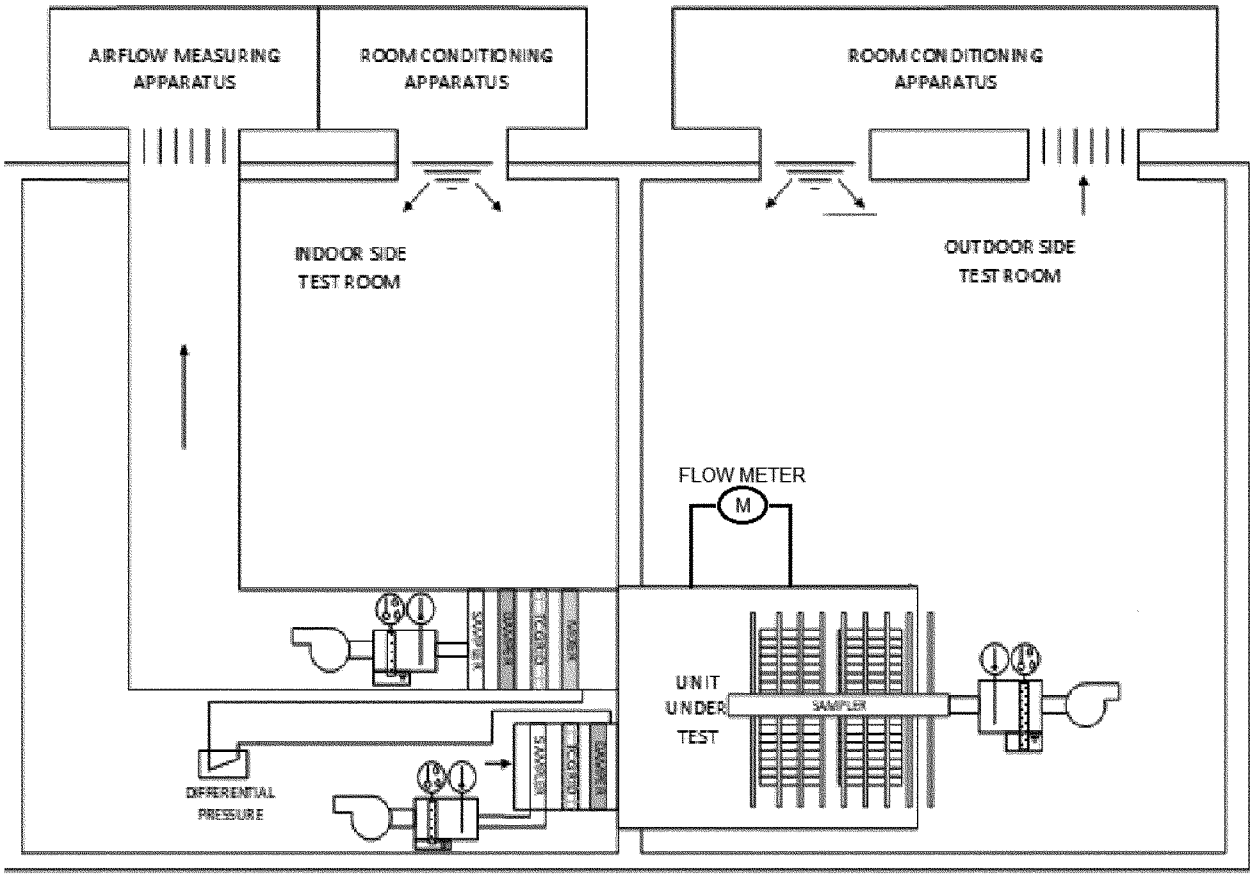

Figure C4: Indoor Air Enthalpy and Single-package Refrigerant Enthalpy Method

4.6.2.1 The calibrated box shall be installed in a temperature-controlled enclosure in which the temperature can be maintained at a constant level. When using the calibrated box method for Single-Packaged Dedicated Systems, the enclosure air temperature shall be maintained such that the condenser air entering conditions are as specified for the test.

4.6.2.2 The temperature-controlled enclosure shall be of a size that will provide clearances of not less than 18 inches on all sides, top and bottom, except that clearance of any one surface may be reduced to not less than 5.5 inches.

4.6.2.3 The heat leakage of the calibrated box shall be noted in the test report.

4.6.2.4 Refrigerant lines within the calibrated box shall be well insulated to avoid appreciable heat loss or gain.

4.6.2.5 Instruments for measuring the temperature around the outside of the calibrated box to represent the enclosure temperature T_{en} shall be located at the center of each wall, ceiling, and floor.

Exception: in the case where a clearance around the outside of the calibrated box, as indicated above, is reduced to less than 18 inches, the number of temperature-measuring devices on the outside of that surface shall be increased to six, which shall be treated as a single temperature to be averaged with the temperature of each of the other five surfaces. There will be six rectangular sections of equal area, and each of these six sections will have a temperature-measuring instrument located at its center. If the refrigeration system is mounted at the location that would cover the center of the face on which it is mounted, up to four temperature measurements shall be used on that face to represent its temperature. Each sensor shall be aligned with the center of the face's nearest outer edge and centered on the distance between that edge and the single-packaged unit (this is illustrated in Figure C5 when using surface temperature sensors), and they shall be treated as a single temperature to be averaged with the temperature of each of the other five surfaces. However, any of these sensors shall be omitted if either (a) the distance between the outer edge and the single packaged unit is less than one foot or (b) if the sensor location would be within two feet of any of the foot-square surfaces discussed below representing a warm discharge air impingement area. In this case, the remaining sensors shall be used to represent the average temperature for the surface.

One of the following two approaches shall be used for the box external temperature measurement. Box calibration and system capacity measurement shall both be done using the same one of these approaches.

4.6.2.5.1 Air temperature sensors. Each temperature sensor shall be at a distance of 6 inches from the calibrated box. If the clearance from a surface of the box (allowed for one surface only) is less than 12 inches, the temperature measuring instruments shall be located midway between the outer wall of the calibrated box and the adjacent surface.

4.6.2.5.2 Surface temperature sensors. Surface temperature sensors shall be mounted on the calibrated box surfaces to represent the enclosure temperature, T_{en}.

Additional surface temperature sensors may be used to measure external hot spots during refrigeration system testing. If this is done, two temperature sensors shall be used to measure the average temperature of the calibrated box surface covered by the condensing section—they shall be centered on equal-area rectangles comprising the covered calibrated box surface whose common sides span the short dimension of this surface. Additional surface temperature sensors may be used to measure box surfaces on which warm condenser discharge air impinges. A pattern of square surfaces, with each surface measuring one foot square, shall be mapped out to represent the hot spot upon which the warm condenser air impinges. One temperature sensor shall be used to measure surface temperature at the center of each square (see Figure C5 of this section). A drawing showing this pattern and identifying the surface temperature sensors shall be provided in the test report. The average surface temperature of the overall calibrated box outer surface during testing shall be calculated as follows.

$$T_{en} = \frac{\sum_{i=1}^{6} A_i T_i + \sum_{j=1}^{2} A_j \left(T'_j - T_1\right) + \sum_{k=1}^{n} A_k \left(T''_k - T_1\right)}{\sum_{i=1}^{6} A_i}$$

Where:

A_i is the surface area of the ith of the six calibrated box surfaces;

T_i is the average temperature measured for the ith surface;

A_j is half of the surface area of the calibrated box covered by the condensing section;

T'_j is the jth of the two temperature measurements underneath the condensing section;

T_1 is the average temperature of the four or fewer measurements representing the temperature of the face on which the single-packaged system is mounted, prior to adjustments associated with hot spots based on measurements T_j and/or T_k;

A_k is the area of the kth of n 1-square-foot surfaces used to measure the condenser discharge impingement area hot spot; and

T''_k is the kth of the n temperature measurements of the condenser discharge impingement area hot spot.

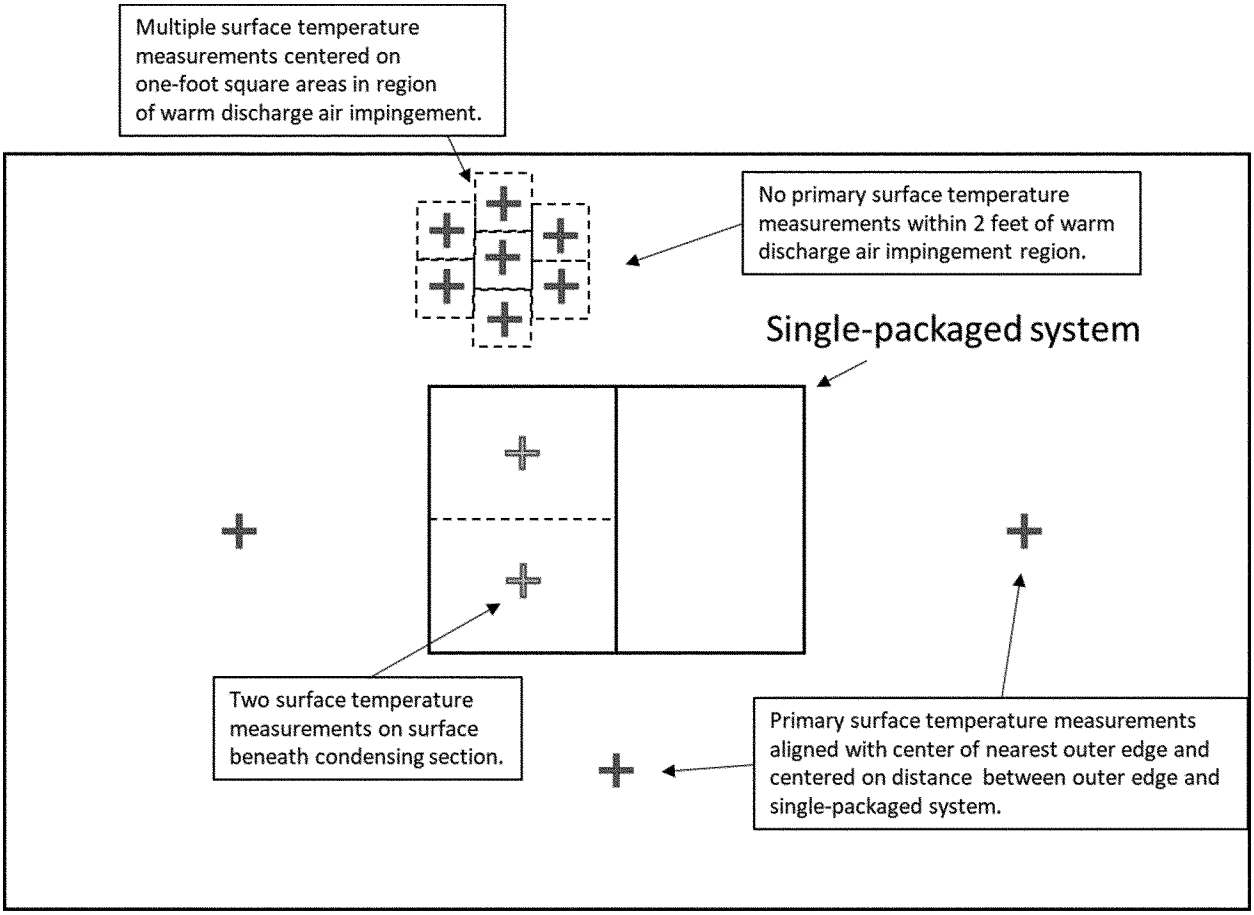

Figure C5: Illustration of Layout of Surface Temperature Sensors on Face of Calibrated Box on which Single-Packaged System is Mounted when Using Section 4.6.2.5.2 of 10 CFR 431 Subpart R, Appendix C.

BILLING CODE 6450–01–C

4.6.2.6 Heating means inside the calibrated box shall be shielded or installed in a manner to avoid radiation to the Single-Packaged Dedicated System, the temperature measuring instruments, and to the walls of the box. The heating means shall be constructed to avoid stratification of temperature, and suitable means shall be provided for distributing the temperature uniformly.

4.6.2.7 The average air dry-bulb temperature in the calibrated box during Single-Packaged Dedicated System tests and calibrated box heat leakage tests shall be the average of eight temperatures measured at the corners of the box at a distance of 2 inches to 4 inches from the walls. The instruments shall be shielded from any cold or warm surfaces except that they shall not be shielded from the adjacent walls of the box. The Single-Packaged Dedicated System under test shall be mounted such that the temperature instruments are not in the direct air stream from the discharge of the Single-Packaged Dedicated System.

4.6.3 Calibration of the Calibrated Box. Calibration of the Calibrated Box shall occur prior to installation of the Single-Packaged Dedicated System. This shall be done either (a) prior to cutting the opening needed to install the Single-Packaged Dedicated System, or (b) with an insulating panel with the same thickness and thermal resistance as the box wall installed in the opening intended for the Single-Packaged Dedicated System installation. Care shall be taken to avoid thermal shorts in the location of the opening either during calibration or during subsequent installation of the Single-Packaged Dedicated System. A calibration test shall be made for air movements comparable to those expected for Single-Packaged Dedicated System capacity measurement, *i.e.,* with air volume flow rate within 10 percent of the air volume flow rate of the Single-Packaged Dedicated System evaporator.

4.6.3.1 The heat input shall be adjusted to maintain an average box temperature not less than 25.0 °F above the test enclosure temperature.

4.6.3.2 The average dry-bulb temperature inside the calibrated box shall not vary more than 1.0 °F over the course of the calibration test.

4.6.3.3 A calibration test shall be the average of eleven consecutive hourly

readings when the box has reached a steady-state temperature condition.

4.6.3.4 The box temperature shall be the average of all readings after a steady-state temperature condition has been reached.

4.6.3.5 The calibrated box has reached a steady-state temperature condition when:

4.6.3.5.1 The average box temperature is not less than 25.0 °F above the test enclosure temperature.

4.6.3.5.2 Temperature variations do not exceed 5.0 °F between temperature measuring stations.

4.6.3.5.3 Temperatures do not vary by more than 2.0 °F at any one temperature-measuring station.

4.6.4 Data to be Measured and Recorded. Refer to Table C2 in Section C7.2 of AHRI 1250–2020 for the required data that need to measured and recorded.

4.6.5 Refrigeration Capacity Calculation.

4.6.5.1 The heat leakage coefficient of the calibrated box is calculated by

$$K_{cb} = \frac{3.412 \times \dot{E}_c}{T_{en} - T_{cb}}$$

4.6.5.2 For each Dry Rating Condition, calculate the Net Capacity by using the following:

$\dot{q}_{ss} = K_{cb}(T_{en} - T_{cb}) + 3.412 \times \dot{E}_c$

(3) *Representations.* RSG may not make representations about the efficiency of a basic model listed in paragraph (1) of this Interim Waiver Order for compliance, marketing, or other purposes unless that basic model has been tested in accordance with the provisions set forth in this alternate test procedure and such representations fairly disclose the results of such testing.

(4) This Interim Waiver Order shall remain in effect according to the provisions of 10 CFR 431.401(h).

(5) This Interim Waiver Order is issued on the condition that the statements and representations provided by RSG are valid. If RSG makes any modifications to the controls or configurations of a basic model subject to this Interim Waiver Order, such modifications will render the waiver invalid with respect to that basic model, and RSG will either be required to use the current Federal test method or submit a new application for a test procedure waiver. DOE may rescind or modify this waiver at any time if it determines the factual basis underlying the petition for the Interim Waiver Order is incorrect, upon a determination that the results from the alternate test procedure are unrepresentative of a basic model's true energy consumption characteristics, or for other appropriate reasons. 10 CFR 431.401(k)(1). Likewise, RSG may request that DOE rescind or modify the Interim Waiver Order if RSG discovers an error in the information provided to DOE as part of its petition, determines that the interim waiver is no longer needed, or for other appropriate reasons. 10 CFR 431.401(k)(2).

(6) Issuance of this Interim Waiver Order does not release RSG from the applicable requirements set forth at 10 CFR part 429.

DOE makes decisions on waivers and interim waivers for only those basic models specifically set out in the petition, not future models that may be manufactured by the petitioner. RSG may submit a new or amended petition for waiver and request for grant of interim waiver, as appropriate, for additional basic models of single-packaged dedicated systems with multiple refrigeration circuits. Alternatively, if appropriate, RSG may request that DOE extend the scope of a waiver or an interim waiver to include additional basic models employing the same technology as the basic model(s) set forth in the original petition consistent with 10 CFR 431.401(g).

Signing Authority

This document of the Department of Energy was signed on July 18, 2022, by Kelly J. Speakes-Backman, Principal Deputy Assistant Secretary for Energy Efficiency and Renewable Energy, pursuant to delegated authority from the Secretary of Energy. That document with the original signature and date is maintained by DOE. For administrative purposes only, and in compliance with requirements of the Office of the Federal Register, the undersigned DOE Federal Register Liaison Officer has been authorized to sign and submit the document in electronic format for publication, as an official document of the Department of Energy. This administrative process in no way alters the legal effect of this document upon publication in the **Federal Register**.

Signed in Washington, DC, on July 19, 2022

Treena V. Garrett,

Federal Register Liaison Officer, U.S. Department of Energy.

February 17, 2022

U.S. Department of Energy
Building Technologies Program, Test Procedure Waiver
1000 Independence Avenue SW, Mailstop EE–SB
Washington, DC 20585–0121

Re: Notice of petition for an alternate test procedure waiver and interim waiver. Request for public comment.

Norlake, Inc., dba Refrigerated Solutions Group (RSG), respectfully requests a test procedure waiver and interim waiver pursuant to 10 CFR 431.401 with regards to 10 CFR 431 Appendix C of subpart R Uniform Test Method for the Measurement of Net Capacity and AWEF of Walk-In Cooler and Walk-In Freezer Refrigeration Systems. This request is for newly proposed test procedures for Walk-In Single Packaged Dedicated Refrigeration Systems.

The reasons for the test procedure amendments are to account for the following;

1. Testing multiple compressors and refrigeration circuits incorporated into a single system.

2. Modifying the use of the 25′ line set as these are single packaged dedicated systems not intended to be used with a line set.

These systems meet the DOE definition of a Single-Packaged Dedicated System (single packaged assembly that includes one or more compressors, a condenser, a means for forced circulation of refrigerated air, and elements by which heat is transferred from air to refrigerant, without any element external to the system imposing resistance to flow of the refrigerated air.). Appendix C to Subpart R of Part 431 states that this equipment is to be evaluated using the test procedure set forth in AHRI 1250–2009 with certain modifications provided in the CFR. Neither 1250 nor the CFR address the prospect of multiple refrigeration circuits in one single-packaged system. Therefore, we request a waiver to cover the procedure for testing systems with multiple refrigeration circuits.

These systems incorporate multiple refrigeration circuits and operate on a single power feed. Each refrigeration circuit has its own compressor, expansion device, condenser, and evaporator circuits and may share condenser and evaporator fans and a single system controller. RSG is requesting a procedural waiver that allows for testing each refrigeration circuit under the same procedure as described in the CFR, but conduct the test simultaneously on each refrigeration circuit with duplicate monitoring of pressures, temperatures, and mass flow for each circuit. The power consumption of the total system will be collected. To determine the system AWEF, follow the procedures in the attached Alternate Procedure document. We feel this is keeping with the intent of the CFR while accounting for design characteristics of a multi-circuit system.

With respect to the CFR and the reference of a 25′ line set (C9.2) and section C3.3.3 referencing refrigerant charge, since one piece single-packaged systems are not intended to be remotely split via a line set, we request that the requirement for the 25′ line set (C8.3 or 9.2) for this type of product be replaced with simply adding a mass flow meter to the liquid line between the heat exchanger and the expansion device. The existing suction line would not be disturbed for the test. The mass flow meter would be added with minimal additional liquid line (5 foot total maximum insulated with line size matching that supplied with the system) consistent with C3.4. The added refrigerant charge to account for the added liquid line extensions to and from the mass flow meter,

the mass flow meter itself and the sight glass would be determined using the pre-existing procedure in C3.3.3. It is also requested to relax the specification in C3.3.3 of 0.5 °F tolerance for each on coil temp to 1 °F as these temperature tolerances can be difficult to repeatedly achieve when the units are shut down, re-plumbed and recharged and additionally, existing test condition tolerances of 1 °F already exist for the indoor air temps which will affect the on-coil temps.

The detailed alternate test procedures are in the attached Alternate Test Procedure document.

Additionally, we recognize that the DOE has previously issued waivers for single package refrigeration systems to use the alternate energy determination methods specified in AHRI 1250–2020 for single packaged systems, specifically air enthalpy methods (amongst others). Our lab is currently not set up to use this test method and the third-party agencies that we have contacted have replied that they are not able to conduct this test method at this time. We have conducted extensive testing using the method noted above and believe that it mirrors the intent of AHRI 1250–2009 and CFR modifications. Requiring alternate test methods from AHRI 1250–2020 will place an undue burden both financially and time wise on RSG. We suggest the above alternative as a viable test method that mirrors the current test method described in the CFR and yields representative real life energy use/efficiency for the systems. Also going forward, the DOE could have alternate test methods for single packaged refrigeration systems that lend themselves to the current test method and not mandate this type of system to test methods that would require added expenses for test labs not currently set up for alternate test methods specified in AHRI 1250–2020.

The basic models that this interm waiver and waiver would apply to are as follows, branded Norlake and Masterbilt;

CPB050PC–S–0, CPB075PC–S–0, CPB100PC–S–0, CPF050PC–S–0, CPF075PC–S–0, CPF100PC–S–0, CPF150PC–S–4 and CPF200PC–S–4.

Other manufactures of this class of equipment include but may not be limited to Heatcraft, Kolpak and Turbo-Air.

Conclusion

With the above noted information RSG requests that the DOE issue an Interim waiver and waiver to allow this modified energy efficiency test method as an alternate to the existing methods to account for single packaged walk-in refrigeration system construction. Failure to grant this request would have an economic hardship due to loss of revenue from sales of this product and/or significantly delay the release of the product to the market. Should the DOE require any additional information to move this forward we would be available and pleased to discuss.

Thank you for your consideration,

/s/

Bill Larson, CFSP

Senior Research and Development Engineer

Refrigerated Solutions Group

715–386–2323

RSG Alternate Test Procedure

The alternate test procedure for the RSG basic models shall be tested using the test procedure for walk-in cooler refrigeration systems prescribed by DOE at 10 CFR part 431, subpart R, appendix C, except as detailed below. All other requirements of 10 CFR part 431, subpart R, appendix C, and DOE's regulations remain applicable.

Modification to 10 CFR part 431, subpart R, appendix C:

* * * * *

3.1.1. In Table 1, Instrumentation Accuracy, refrigerant temperature measurements shall have a tolerance of ±0.5 F for unit cooler in/out. Temperature measurements used to determine water vapor content of the air shall be accurate to within ±0.4 F, ±1.0 F for all other temperature measurements.

* * * * *

3.1.4. In Tables 2 through 14, the Test Condition Outdoor Wet Bulb Temperature requirement and its associated tolerance apply only to units with evaporative cooling and single-packaged dedicated systems.

* * * * *

3.1.6. Tables 3, 4, 7, and 8 shall be modified to read as follows:

TABLE 3—FIXED CAPACITY MATCHED REFRIGERATOR SYSTEM, CONDENSING UNIT LOCATED INDOOR

Test description	Unit cooler air entering dry-bulb (°F)	Unit cooler air entering relative humidity (%)	Condenser air entering dry-bulb (°F)	Condenser air entering wet-bulb (°F)	Compressor capacity	Test objective
Off Cycle Fan Power	35	<50	.....	.....	Compressor Off	Measure fan input wattage during compressor off cycle.
Refrigeration Capacity	35	<50	90	[1] 75, [2] 65	Compressor On	Determine Net Refrigeration Capacity of Unit Cooler, input power, and EER at Rating Condition.

Note:
1. Required only for evaporative Dedicated Condensing Units.
2. Maximum allowable value for Single-Packaged Dedicated Systems that do not use evaporative Dedicated Condensing Units, where all or part of the equipment is located in the outdoor room.

TABLE 4—FIXED CAPACITY MATCHED REFRIGERATOR SYSTEM, CONDENSING UNIT LOCATED OUTDOOR

Test description	Unit cooler air entering dry-bulb (°F)	Unit cooler air entering relative humidity (%)	Condenser air entering dry-bulb (°F)	Condenser air entering wet-bulb (°F)	Compressor capacity	Test objective
Off Cycle Fan Power	35	<50	.....	.....	Compressor Off	Measure fan input wattage during compressor off cycle.
Refrigeration Capacity A	35	<50	95	[1] 75, [2] 68	Compressor On	Determine Net Refrigeration Capacity of Unit Cooler, input power, and EER at Rating Condition.
Refrigeration Capacity B	35	<50	59	[1] 54, [2] 46	Compressor On	Determine Net Refrigeration Capacity of Unit Cooler, and system input power at moderate condition.
Refrigeration Capacity C	35	<50	35	[1] 34, [2] 29	Compressor On	Determine Net Refrigeration Capacity of Unit Cooler, and system input power at cold condition.

Note:
1. Required only for evaporative Dedicated Condensing Units.
2. Maximum allowable value for Single-Packaged Dedicated Systems that do not use evaporative Dedicated Condensing Units, where all or part of the equipment is located in the outdoor room.

TABLE 7—FIXED CAPACITY MATCHED FREEZER SYSTEM, CONDENSING UNIT LOCATED INDOOR

Test description	Unit cooler air entering dry-bulb (°F)	Unit cooler air entering relative humidity (%)	Condenser air entering dry-bulb (°F)	Condenser air entering wet-bulb (°F)	Compressor capacity	Test objective
Off Cycle Fan Power	−10	<50			Compressor Off	Measure fan input wattage during compressor off cycle.
Refrigeration Capacity	−10	<50	90	[1] 75, [2] 68	Compressor On	Determine Net Refrigeration Capacity of Unit Cooler, input power, and EER at Rating Condition.
Defrost Frost Load	−10	Various	90	[1] 75, [2] 68	System Dependent	Test according to Appendix C Section C11.

Note:
1. Required only for evaporative Dedicated Condensing Units.
2. Maximum allowable value for Single-Packaged Dedicated Systems that do not use evaporative Dedicated Condensing Units, where all or part of the equipment is located in the outdoor room.

TABLE 8—FIXED CAPACITY MATCHED FREEZER SYSTEM, CONDENSING UNIT LOCATED OUTDOOR

Test description	Unit cooler air entering dry-bulb (°F)	Unit cooler air entering relative humidity (%)	Condenser air entering dry-bulb (°F)	Condenser air entering wet-bulb (°F)	Compressor capacity	Test objective
Off Cycle Fan Power	−10	<50			Compressor Off	Measure fan input wattage during compressor off cycle.
Refrigeration Capacity A	−10	<50	95	[1] 75, [2] 68	Compressor On	Determine Net Refrigeration Capacity of Unit Cooler, input power, and EER at Rating Condition.
Refrigeration Capacity B	−10	<50	59	[1] 54, [2] 46	Compressor On	Determine Net Refrigeration Capacity of Unit Cooler, input power, and EER at Rating Condition.
Refrigeration Capacity C	−10	<50	35	[1] 34, [2] 29	Compressor On	Determine Net Refrigeration Capacity of Unit Cooler, input power, and EER at Rating Condition.
Defrost Frost Load	−10	Various	95	[1] 75, [2] 68	System Dependent	Test according to appendix C Section C11.

Note:
1. Required only for evaporative Dedicated Condensing Units.
2. Maximum allowable value for Single-Packaged Dedicated Systems that do not use evaporative Dedicated Condensing Units, where all or part of the equipment is located in the outdoor room.

* * * * *

BILLING CODE 6450–01–P

~~3.2.5. In the test setup (appendix C, section C8.3), the liquid line and suction line shall be constructed of pipes of the manufacturer-specified size. The pipe lines shall be insulated with a minimum total thermal resistance equivalent to1/2-inch thick insulation having a flat-surface R-Value of 3.7 ft^2- °F-hr/Btu per inch or greater. Flow meters need not be insulated but must not be in contact with the floor. The lengths of the connected liquid line and suction line shall be 25 feet ± 3 inches, not including the requisite flow meters, each. Of this length, no more than 15 feet shall be in the conditioned space. Where there are multiple branches of piping, the maximum length of piping applies to each branch individually as opposed to the total length of the piping.~~

Additional modifications to appendix C of AHRI 1250-2009 not yet specified in 10 CFR part 431, subpart R, appendix C:

C1. *Purpose*. The purpose of this appendix is to provide a method of testing for Matched-pair, single-packaged dedicated systems, as well as Unit coolers and Dedicated Condensing Units tested alone.

C2. Scope. These methods of testing apply to walk-in cooler and freezer systems that have either matched or mix-matched factory-made, forced circulation, free-delivery unit coolers and factory-made electric motor driven, single and variable capacity positive displacement condensing units, or single-packaged dedicated systems.

* * * * *

C.3.1.2 Air wet-bulb and dry-bulb temperatures entering the ~~Unit Cooler~~ Single-packaged system at its evaporator return and condenser air inlet shall be measured based on the airflow area at the point of measurement. One measuring station is required for each 2.0 ft2 of the first 10.0 ft2 of airflow area and one additional measuring station is required for each 4.0 ft2 of airflow area above 10.0 ft2. A minimum of two stations shall be used and the number of measuring stations shall be rounded up to the next whole number.

* * * * *

C.3.1.5 If sampling tubes are used, each tube opening may be considered a temperature measuring station provided the openings are uniformly spaced along the tube, the airflow rates entering each port are relatively uniform (± 15%) and the arrangement of tubes complies with the location requirements of C3.1.2. Additionally, a one time temperature traverse shall be made over the measurement surface, prior to the tests to assess the temperature variation and ensure it complies with the allowable deviation specified in C3.1.4. (Refer to ANSI/ASHRAE Standard 41.1 for more information and diagrams). If sampling tubes are not used for non-evaporative condensing single-package, a single air wet-bulb or RH sensor may be used. When used, this sensor shall be located at the geometric centre of the largest condenser coil face and 6-12 inches from the condenser coil.

* * * * *

C3.1.6 Refrigerant temperatures entering and leaving the ~~Unit Cooler~~ evaporator section of the Single-packaged system shall be measured by a temperature measuring instrument placed in a thermometer well and inserted into the refrigerant stream. These wells shall be filled with non-solidifying, thermal conducting liquid or paste to ensure the temperature sensing instrument is exposed to a representative temperature. The entering temperature of the refrigerant shall be measured within six pipe diameters upstream of the ~~control~~ expansion device. If the refrigerant tube outer diameter is less than ½-inch, the refrigerant temperature may be measured using the average of two temperature measuring instruments with a minimum accuracy of ±0.5°F placed on opposite sides of the refrigerant tube surface. In this case, the refrigerant tube shall be insulated with 1-inch thick insulation from a point 6 inches upstream of the measurement location to a point 6 inches downstream of the measurement location. Also, the entering measurement location may be moved to a location 6 inches upstream of the expansion device.

* * * * *

C3.3.1 With the equipment operating at the desired test conditions, the temperature and pressure of the refrigerant leaving the unit cooler, entering the expansion device, and entering and leaving the compressor shall be measured. For cases where the calibrated box method or indoor air enthalpy method is also conducted, data used to calculate capacity according to the single-package refrigerant enthalpy method and the ~~calibrated box~~ additional method shall be collected over the same intervals.

C3.3.3 ~~On equipment sensitive to refrigerant charge~~For single-package systems tested using either the calibrated box method or the indoor air enthalpy method as the primary measurement and the single-package refrigerant enthalpy method as the secondary method, a preliminary test for Rating Condition A using the primary method is required prior to setting up the refrigerant enthalpy method measurements. ~~connecting any pressure gauges or beginning the first official test.~~ In preparation for this preliminary test, temperature sensors shall be attached to the equipment's evaporator and condenser coils. The sensors shall be located at points that are not affected by vapor superheat or liquid subcooling. Placement near the midpoint of the coil, at a return bend, is recommended. The preliminary test shall be conducted with the requirement that the temperatures of the on-coil sensors be included with the regularly recorded data. After the preliminary test is completed, the refrigerant shall be removed from the equipment, and the refrigerant enthalpy measurement setup shall be completed~~, needed pressure gauges shall be installed~~. The equipment shall be evacuated and recharged with refrigerant. The test shall then be repeated. Once steady-state operation is achieved, refrigerant shall be added or removed until, as compared to the average values from the preliminary test, the following conditions are achieved: (1) each on-coil temperature sensor indicates a reading that is within ~~±0.5~~1.0°F, (2) the temperatures of the refrigerant entering and leaving the compressor are within ±4°F, and (3)

the refrigerant temperature entering the expansion device is within ±1°F. Once these conditions have been achieved over an interval of at least ten minutes, refrigerant charging equipment shall be removed and the remaining ~~first of the official~~ tests shall be conducted ~~initiated~~.

Replace section C3.4.6 [regarding measurement of refrigerant oil concentration and adjustment] with: C3.4.6 When conducting the refrigerant enthalpy method for a single-package system, the length of the added liquid line conducting refrigerant out of the system, to the flow meter, and back into the system shall be no more than 5 feet. No such modification to the suction line shall be made.

* * * * *

C5.1 The ~~Gross Total~~ Refrigeration Capacity ~~of Unit Coolers~~ for single-packaged refrigeration systems shall be determined ~~by either one of the following methods~~ using either the Calibrated Box method or the Indoor Air Enthalpy method as a primary test method and the Single-Package Refrigerant Enthalpy method as the secondary test method.

~~C5.1.1 Method 1, DX Dual Instrumentation (Refrigerant Enthalpy Method). The Refrigeration Capacity shall be determined by measuring the enthalpy change and the mass flow rate of the refrigerant across the Unit Cooler using two independent measuring systems.~~

~~C5.1.2 Method 2, DX Calibrated Box. The Refrigeration Capacity shall be determined concurrently by measuring the enthalpy change and the mass flow rate of the refrigerant across the Unit Cooler and the heat input to the calibrated box.~~

C5.1.1 Single-Package Refrigerant Enthalpy method shall determine gross refrigeration capacity by measuring the enthalpy change and the mass flow rate of the refrigerant using a single set of measurements.

C5.1.2 Calibrated Box method shall determine net refrigeration capacity by measuring the heat input to the calibrated box, including thermal transfer through the calibrated box walls.

C5.1.3 Indoor Air Enthalpy method shall determine net refrigeration capacity of Single-package System and input power in accordance with ASHRAE 37–2009, Figure C4, and the following modifications.

C5.1.3.1 Net refrigeration capacity is determined by measuring airflow rate and the dry-bub temperature and water vapor content of the air that enters and leaves the coil. Air enthalpies shall be determined in accordance with ANSI ASHRAE 41.6. Entering air is to be sufficiently dry as to not produce frost on the Evaporator coil. Therefore, only sensible capacity measured by dry bulb change shall be used to calculate capacity.

C5.1.4 Testing Sequence. The primary test method shall be used to measure the capacity for Rating Condition A prior to set-up of the Single-Package Refrigerant Enthalpy Measurement. After set-up of the Refrigerant Enthalpy method, the Net Capacity shall be measured using both the primary test method and the Refrigerant Enthalpy method. The Net Capacity measurement using the Refrigerant Enthalpy method shall be within 6 percent of the net capacity measurement using the primary method.

If a capacity balance within tolerance is not initially achieved, take steps to reduce the thermal losses of the single-package system evaporator compartment by sealing air gaps and potentially adding more external insulation. If using the Calibrated Box method as the primary method, achieving a capacity balance may require conducting the calibration with calibrated box insulation material at the same average temperature as during capacity measurement, or using multiple calibrations conducted at different average insulation material temperatures and using these data to construct a correlation for the calibration coefficient K_{cb} as a function of average insulation temperature. The official performance measurements are based on the primary method testing without any air gap sealing and additional external insulation used to achieve the 6 percent energy balance in place.

C5.1.5 The refrigerant enthalpy method Net Capacity shall be calculated from the Gross Capacity Measurement as follows.

$$\dot{Q}_{ss,2} = \dot{Q}_{ref} - 3.412 \times \dot{E}F_{comp,on} - \dot{Q}_{sploss}$$

Where $\dot{Q}_{sploss}$ represents the single-package system thermal losses through the walls of the evaporator side of the single-package system to the condenser side and to the exterior ambient, and shall be calculated as follows.

$$\dot{Q}_{sploss} = UA_{cond} \times (T_{condside} - T_{evapside}) + UA_{amb} \times (T_{amb} - T_{evapside})$$

Where:

UA_{cond} and UA_{amb} are, for the condenser/evaporator partition and the evaporator compartment walls exposed to ambient air, respectively, the product of the overall heat transfer coefficient and surface area of the unit as manufactured, *i.e.* without external insulation that might have been added during the test;

$T_{evapside}$ is the air temperature in the evaporator compartment;

$T_{condside}$ is the air temperature in the condenser compartment; and

T_{amb} is the air temperature outside the single-package system.

The Net Capacity to be used in AWEF calculations shall be the net capacity measured using the primary method.

C5.2 Upon the completion of the Rating Condition A steady state test, an off-cycle evaporator fan power test shall be conducted to measure the evaporator fan power consumption during a compressor-off period in accordance with C10 of this standard.

C5.3 Upon the completion of the Rating Condition A steady state test for walk-in freezer systems, a mandatory defrost test shall be conducted to establish the energy input for a defrost cycle ~~and the time between defrost intervals~~. ~~An optional defrost test to establish credit for an adaptive or demand defrost system may be elected after the mandatory defrost test.</PHOTO>~~

C5.4 Upon the completion of the Rating Condition A steady state test, off-cycle evaporator fan power test, and defrost test (for walk-in freezer systems), the Rating Condition B and C steady state tests shall be conducted. Capacity balance as described in section C5.1.4 for Rating Condition A is not required for Rating Conditions B and C.

* * * * *

C6.3 For single-packaged dedicated systems, test chamber requirements shall be as follows:

a.) For the calibrated box method, follow ASHRAE 16 – 2016 section 6.1 for calibrated type calorimeters excluding water and water energy inputs for the indoor-side compartment
b.) For the indoor air enthalpy method, follow ASHRAE 37-2009.

* * * * *

Figure C3: Calibrated Box and Single-package Refrigerant Enthalpy Method

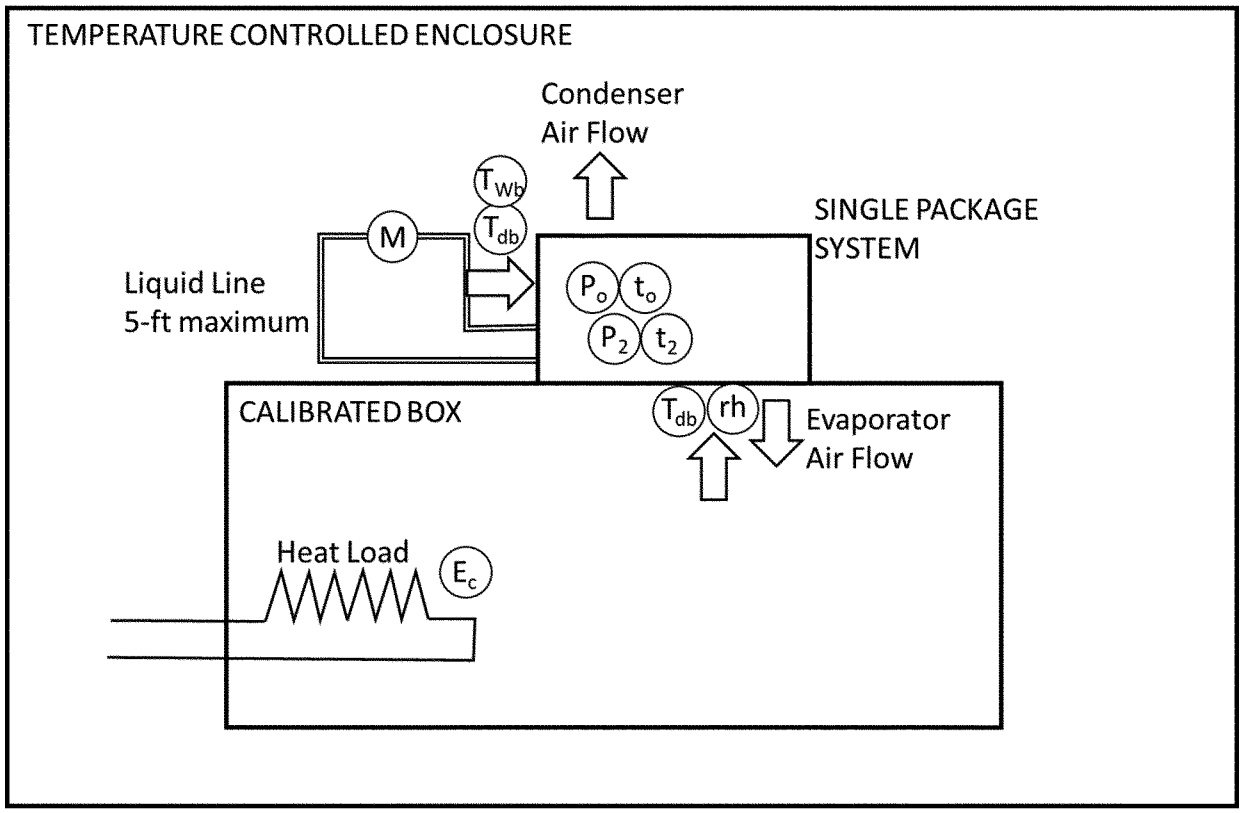

LEGEND	
M	Mass Flow Meter
T_{db} T_{Wb}	Air Temperature Measurement Station
rh	Air Relative Humidity Measurement
P	Refrigerant Pressure Measurement
t	Refrigerant Temperature Measurement Station
E_c	Heat Load Input Power

Figure C4: Indoor Air Enthalpy and Single-package Refrigerant Enthalpy Method

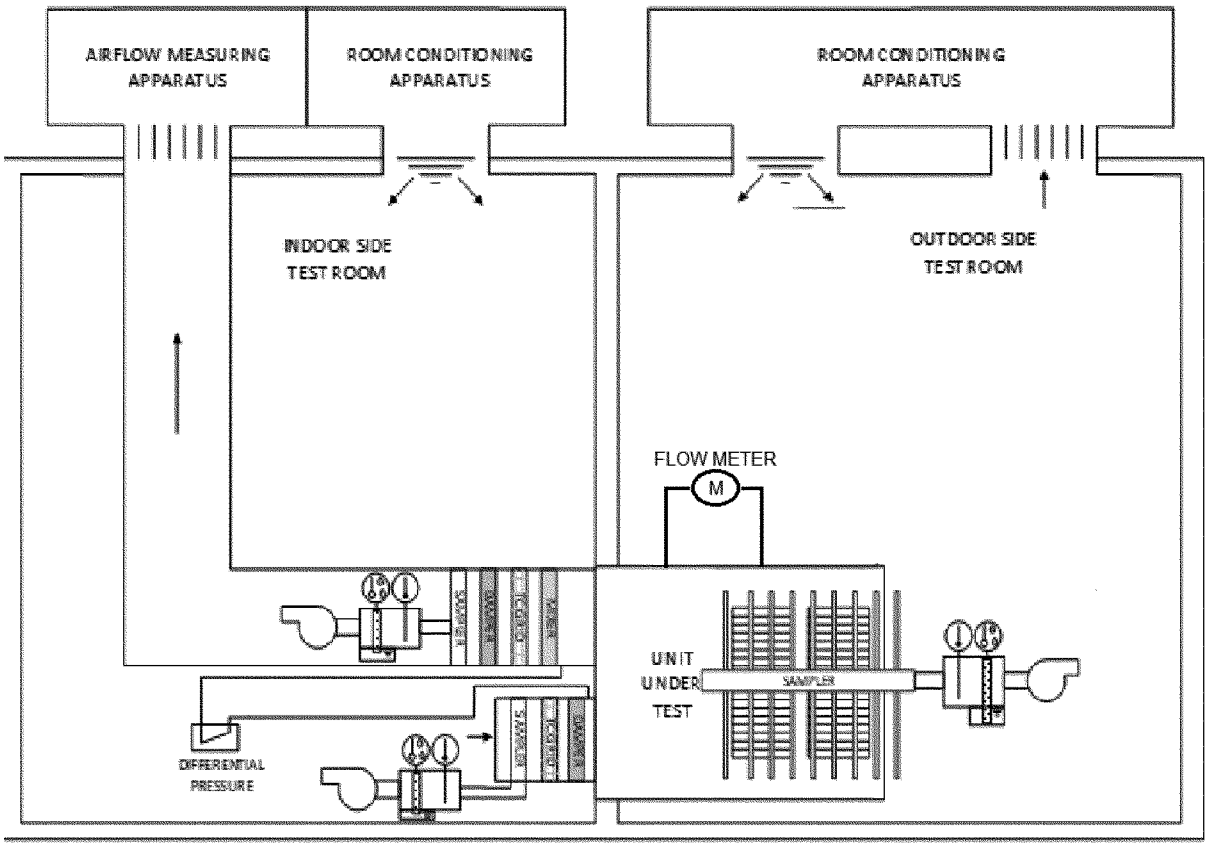

* * * * *

C8 Single-package Refrigerant Enthalpy Method ~~*DX Dual Instrumention Test Procedure (Method 1: Refrigerant Enthalpy Method)*~~

C8.1 General Description. In this method, capacity is determined from the refrigerant enthalpy change and flow rate. Enthalpy changes are determined from measurements of entering and leaving pressures and temperatures of the refrigerant, and the flow rate is determined by a suitable flow meter in the liquid line. ~~For cases where calibrated box method is also conducted, data used to calculate capacity as described in the refrigerant enthalpy method and the calibrated box method shall be collected over the same intervals. This method may be used for tests of equipment in which the refrigerant charge is not critical and where normal installation procedures involve the field connection of refrigerant lines.~~ This method shall not be used for tests in which the refrigerant liquid leaving the flow meter is subcooled less than 3°F or for tests in which any instantaneous measurement of the superheat of the vapor leaving the evaporator coil is less than 5°F. ~~If~~ Supplementary cooling may be artificially provided for the ~~in the~~ liquid line ~~is artificially introduced~~ to ensure enough subcooling when making measurements to establish the capacity balance for Rating Condition A, however, no official measurements used to calculate AWEF may be made while providing such supplementary cooling. ~~the added cooling capacity shall be measured and deducted from the gross refrigeration capacity calculated in C8.5.2.~~

C8.2 Measurements. Refer to Section C3 for requirements of air-side and refrigerant-side measurements

C8.3 Test Setup and Procedure. Refer to Section C6, C7 and Figure C3 for specific test setup. ~~The condensing unit and the unit cooler shall be connected by pipes with manufacturer' specified size The pipe lines shall be well insulated.~~ The length~~s~~ of the ~~connected~~ added liquid line ~~and suction line~~ shall be ~~2~~5 feet, ~~respectively~~ maximum.

C8.4 Data to be Measured and Recorded. Refer to "Refrigerant Enthalpy Method" in Table C2 in Section C7.2 for the required data that need to measured and recorded, except as follows.

C8.4.1 Water vapor content of air entering the unit cooler (evaporator) and condensing unit may be measured using a wet bulb temperature measurement or a relative humidity sensor, but both are not required.

C8.4.2 Wet bulb temperature of air leaving the unit cooler (evaporator) and condensing unit need not be measured.

C8.4.3 Required refrigerant pressure measurement includes only subcooled liquid entering the expansion valve and superheated vapor exiting the unit cooler (evaporator).

C8.4.4 Only one refrigerant mass flow measurement is required.

C8.4.5 Measurement of Refrigerant oil flow rate and oil/refrigerant mass ratio are not required.

C8.5 Refrigeration capacity Calculation.

C8.5.1 The refrigerant-side gross capaciti~~es~~y ~~by independent measurement are~~ is calculated by

$$\dot{Q}_{ref} = \dot{m}_{ref}(h_{out} - h_{in})$$

~~C8.5.2 Gross refrigeration capacity is calculated by~~

~~C8.5.3 Allowable Cooling Capacity heat balance~~

~~C8.5.4 The net refrigeration capacity is calculated by~~

C8.5.2 Measurement of Capacity for a Single-package System with Multiple Refrigeration Circuits.

For a Single-package System with multiple refrigeration circuits, apply the refrigerant enthalpy method separately for each circuit and sum the separately-measured gross refrigeration capacities.

C9 ~~DX~~ Calibrated Box Test Procedure ~~(Method 2)~~

C9.1 Measurements. Refer to Section C3 for requirements of air-side and refrigerant-side measurements.

C9.2 Test Setup and Procedure. Refer to Section C6, C7 and Figure ~~C2~~C3 for specific test setup. ~~The condensing unit and the unit cooler shall be connected by pipes with manufacturer' specified size he pipe lines shall be well insulated. The lengths of the connected liquid line and suction line shall be 26 feet, respectively.~~

C9.2.1 Apparatus Setup for Calibrated Box Calibration and Test

C9.2.1.1 The calibrated box shall be installed in a temperature controlled enclosure in which the temperature can be maintained at a constant level. When using the calibrated box method for single-package systems, the enclosure air temperature shall be maintained such that the condenser air entering conditions are as specified for the test.

C9.2.1.2 The temperature controlled enclosure shall be of a size that will provide clearances of not less than 18 in at all sides, top and bottom, except that clearance of any one surface may be reduced to not less than 5.5 in.

C9.2.1.3 ~~In no case shall~~ The heat leakage of the calibrated box shall be noted in the test report. ~~recorded and exceed 30 % of the Gross Total Cooling Effect of the Unit Cooler under~~

~~test. The ability to maintain a low temperature in the temperature controlled enclosure will reduce the heat leakage into the calibrated box and may extend its application range.~~

C9.2.1.4 Refrigerant lines within the calibrated box shall be well insulated to avoid appreciable heat loss or gain.

C9.2.1.5 Instruments for measuring the temperature around the outside of the calibrated box to represent the enclosure temperature T_{en} shall be located at the center of each wall, ceiling, and floor. ~~at a distance of 6 in from the calibrated box.~~ Exception: in the case where a clearance around the outside of the calibrated box, as indicated above, is reduced to less than 18 in, the number of temperature measuring devices on the outside of that surface shall be increased to six, which shall be treated as a single temperature to be averaged with the temperature of each of the other five surfaces. The six temperature measuring instruments shall be located at the center of six rectangular sections of equal area. If the refrigeration system is mounted at the location that would cover the center of the face on which it is mounted, up to four temperature measurements shall be used on that face to represent its temperature. Each sensor shall be aligned with the center of the face's nearest outer edge and centered on the distance between that edge and the single-packaged unit (this is illustrated in Figure C5 when using surface temperature sensors), and they shall be treated as a single temperature to be averaged with the temperature of each of the other five surfaces. However, any of these sensors shall be omitted if either (a) the distance between the outer edge and the single packaged unit is less than a foot or (b) if the sensor location would be within two feet of any of the foot-square surfaces discussed below representing a warm discharge air impingement area. In this case, the remaining sensors shall be used to represent the average temperature for the surface.

One of the following two approaches shall be used for the box external temperature measurement. Box calibration and system capacity measurement shall both be done using the same one of these approaches.

C9.2.1.5.1 Air temperature sensors.

Each temperature sensor shall be at a distance of 6 inches from the calibrated box. If the clearance from a surface of the box (allowed for one surface only) is less than 12 inches, the temperature measuring instruments shall be located midway between the outer wall of the calibrated box and the adjacent surface.

C9.2.1.5.2 Surface temperature sensors.

Surface temperature sensors shall be mounted on the calibrated box surfaces to represent the enclosure temperature T_{en}.

Additional surface temperature sensors may be used to measure external hot spots during refrigeration system testing. If this is done, two temperature sensors shall be used to measure the average temperature of the calibrated box surface covered by the condensing section—they shall be located centered on equal-area rectangles comprising the covered calibrated box surface whose common sides span the short dimension of this surface. Additional surface temperature sensors may be use to measure box surfaces on which warm condenser discharge air impinges. A pattern of square surfaces measuring one foot square shall be mapped out to represent the hot spot upon which the warm condenser air impinges. One temperature sensor shall be used to measure surface temperature at the center of each square (see Figure C5). A drawing showing this pattern and identifying the surface temperature sensors shall be provided in the test report. The average surface temperature of the overall calibrated box outer surface during testing shall be calculated as follows.

~~test. The ability to maintain a low temperature in the temperature controlled enclosure will reduce the heat leakage into the calibrated box and may extend its application range.~~

C9.2.1.4 Refrigerant lines within the calibrated box shall be well insulated to avoid appreciable heat loss or gain.

C9.2.1.5 Instruments for measuring the temperature around the outside of the calibrated box to represent the enclosure temperature T_{en} shall be located at the center of each wall, ceiling, and floor. ~~at a distance of 6 in from the calibrated box.~~ Exception: in the case where a clearance around the outside of the calibrated box, as indicated above, is reduced to less than 18 in, the number of temperature measuring devices on the outside of that surface shall be increased to six, which shall be treated as a single temperature to be averaged with the temperature of each of the other five surfaces. The six temperature measuring instruments shall be located at the center of six rectangular sections of equal area. If the refrigeration system is mounted at the location that would cover the center of the face on which it is mounted, up to four temperature measurements shall be used on that face to represent its temperature. Each sensor shall be aligned with the center of the face's nearest outer edge and centered on the distance between that edge and the single-packaged unit (this is illustrated in Figure C5 when using surface temperature sensors), and they shall be treated as a single temperature to be averaged with the temperature of each of the other five surfaces. However, any of these sensors shall be omitted if either (a) the distance between the outer edge and the single packaged unit is less than a foot or (b) if the sensor location would be within two feet of any of the foot-square surfaces discussed below representing a warm discharge air impingement area. In this case, the remaining sensors shall be used to represent the average temperature for the surface.

One of the following two approaches shall be used for the box external temperature measurement. Box calibration and system capacity measurement shall both be done using the same one of these approaches.

$$T_{en} = \frac{\sum_{i=1}^{6} A_i T_i + \sum_{j=1}^{2} A_j \left(T'_j - T_1\right) + \sum_{k=1}^{n} A_k \left(T''_k - T_1\right)}{\sum_{i=1}^{6} A_i}$$

Where:

A_i is the surface area of the ith of the six calibrated box surfaces;

T_i is the average temperature measured for the ith surface;

A_j is half of the surface area of the calibrated box covered by the condensing section;

T'_j is the jth of the two temperature measurements underneath the condensing section;

T_1 is the average temperature of the four or fewer measurements representing the temperature of the face on which the single-packaged system is mounted, prior to adjustments associated with hot spots based on measurements T_j and/or T_k;

A_k is the area of the kth of n 1-square-foot surfaces used to measure the condenser discharge impingement area hot spot;

T''_k is the kth of the n temperature measurements of the condenser discharge impingement area hot spot; and

Figure C5: Illustration of Layout of Surface Temperature Sensors on Face of Calibrated Box on which Single-packaged System is Mounted when using C9.2.1.5.2.

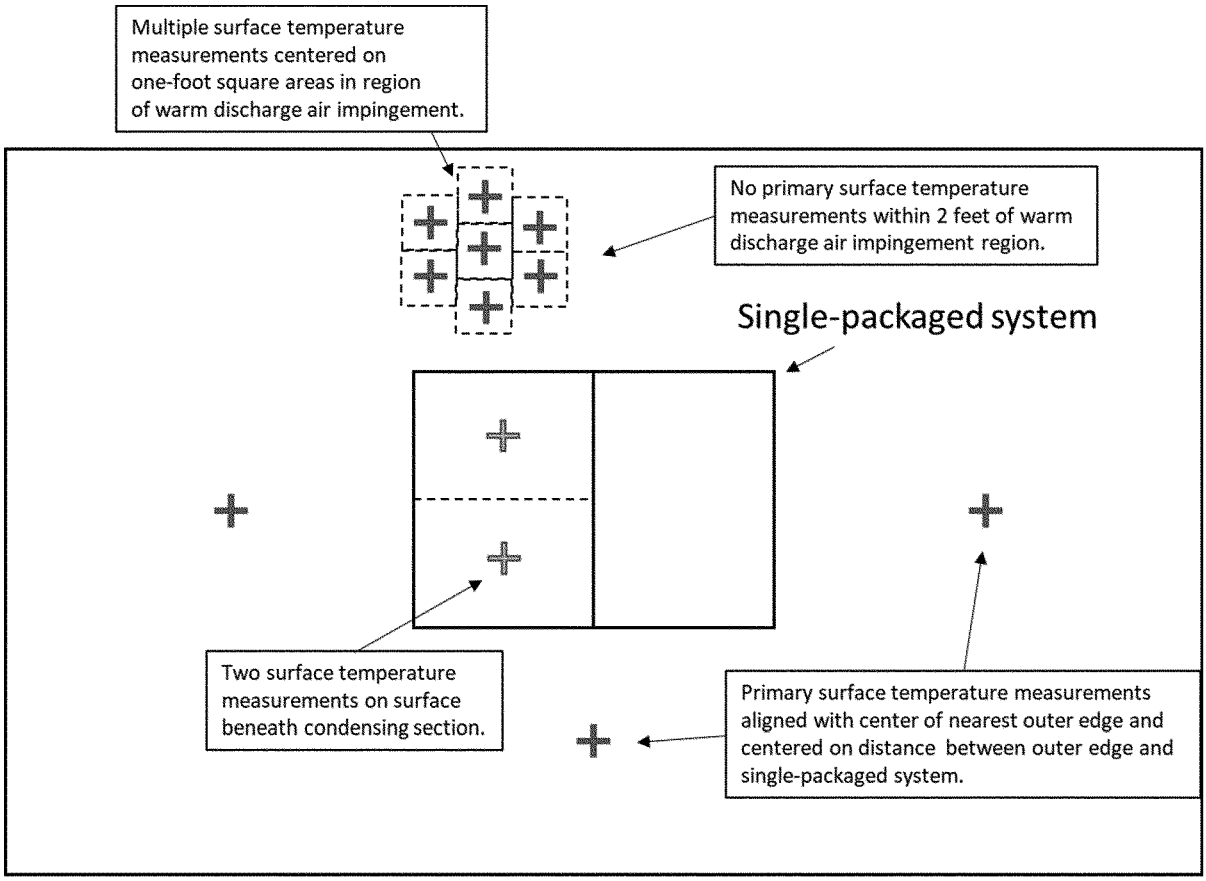

C9.2.1.6 Heating means inside the calibrated box shall be shielded or installed in a manner to avoid radiation to the ~~Unit Cooler~~Single-package system, the temperature measuring instruments, and to the walls of the box. The heating means shall be constructed to avoid stratification of temperature, and suitable means shall be provided for distributing the temperature uniformly.

C9.2.1.7 The average air dry-bulb temperature in the calibrated box during ~~Unit Cooler~~Single-package system tests and calibrated box heat leakage tests shall be the average of eight temperatures measured at the corners of the box at a distance of 2 in to 4 in from the walls. The instruments shall be shielded from any cold or warm surfaces except that they shall not be shielded from the adjacent walls of the box. The ~~Unit Cooler~~Single-package system under test shall be mounted such that the temperature instruments are not in the direct air stream from the discharge of the ~~Unit Cooler~~Single-package system.

C9.2.2 Calibration of the Calibrated Box. Calibration of the Calibrated Box shall occur prior to installation of the Single-package system. This shall be done either (a) prior to cutting the opening needed to install the Single-package system, or (b) with an insulating panel with the same thickness and thermal resistance as the box wall installed in the opening intended for the Single-package system installation. Care shall be taken to avoid thermal shorts in the location of the opening either during calibration or during subsequent installation of the Single-package System. A calibration test shall be made for ~~the maximum and the minimum forced~~ air movements comparable to those expected for Single-package system capacity measurement, i.e. with air volume flow rate within 10 percent of the air volume flow rate of the Single-package system evaporator. ~~expected in the use of the calibrated box~~. ~~The calibration heat leakage shall be plotted as a straight line function of these two air quantities and the curve shall be used as calibration for the box.~~

C9.2.2.1 The heat input shall be adjusted to maintain an average box temperature not less than 25.0 °F above the test enclosure temperature.

C9.2.2.2 The average dry-bulb temperature inside the calibrated box shall not vary more than 1.0 °F over the course of the calibration test.

C9.2.2.3 A calibration test shall be the average of eleven consecutive hourly readings when the box has reached a steady-state temperature condition.

C9.2.2.4 The box temperature shall be the average of all readings after a steady-state temperature condition has been reached.

C9.2.2.5 The calibrated box has reached a steady-state temperature condition when:

1. The average box temperature is not less than 25 °F above the test enclosure temper-ature.

2. Temperature variations do not exceed 5.0 °F between temperature measuring stations.

3. Temperatures do not vary by more than 2 °F at any one temperature- measuring station.

C9.3 Data to be Measured and Recorded. Refer to Table C2 in Section C7.2 for the required data that need to measured and recorded.

C9.4 Refrigeration capacity Calculation.

C9.4.1 The heat leakage coefficient of the calibrated box is calculated by

$$K_{cb} = \frac{3.412 \times \dot{E}_c}{T_{en} - T_{cb}}$$

C9.4.2 For each Dry Rating Condition, calculate the ~~air-side Gross~~ Net ~~Total~~ ~~Refrigeration~~ Capacity:

$$\dot{q}_{ss} = K_{cb}(T_{en} - T_{cb}) + 3.412 \times \dot{E}_c$$

$$\cancel{\dot{Q}_{air} = K_{cb} \cdot (T_{en} - T_{cb}) + 3.412 \cdot (\dot{E}_c + \dot{E}F_{comp,on})}$$

~~C9.4.3 For each Dry Rating Condition, calculate the refrigerant-side Gross Total Refrigeration Capacity:~~

~~C9.4.4 Gross Total Refrigeration Capacity:~~

~~C9.4.5 Allowable Refrigeration Capacity heat balance~~

[FR Doc. 2022–15726 Filed 7–21–22; 8:45 am]

BILLING CODE 6450–01–C

DEPARTMENT OF ENERGY

Environmental Management Site-Specific Advisory Board, Paducah

AGENCY: Office of Environmental Management, Department of Energy.

ACTION: Notice of open meeting.

SUMMARY: This notice announces a meeting of the Environmental Management Site-Specific Advisory Board (EM SSAB), Paducah. The Federal Advisory Committee Act requires that public notice of this meeting be announced in the **Federal Register**.

DATES: Thursday, August 18, 2022; 5:30 p.m.–7 p.m.

ADDRESSES: The meeting will be held, strictly following COVID–19 precautionary measures, at: West Kentucky Community and Technical College, Emerging Technology Building, Room 109, 5100 Alben Barkley Drive, Paducah, Kentucky 42001.

FOR FURTHER INFORMATION CONTACT: Eric Roberts, Board Support Manager, by Phone: (270) 554–3004 or Email: *eric@pgdpcab.org.*

SUPPLEMENTARY INFORMATION:

Purpose of the Board: The purpose of the Board is to make recommendations to DOE–EM and site management in the areas of environmental restoration, waste management, and related activities.

Tentative Agenda

- Review of Agenda
- Administrative Issues
- Public Comment Period

Public Participation: The meeting is open to the public. The EM SSAB, Paducah, welcomes the attendance of the public at its advisory committee meetings and will make every effort to accommodate persons with physical disabilities or special needs. If you require special accommodations due to a disability, please contact Eric Roberts as soon as possible in advance of the meeting at the telephone number listed above. Written statements may be filed with the Board either before or after the meeting. Comments received by no later than 5:00 p.m. CDT on Monday, August 15, 2022 will be read aloud during the meeting. Comments will also be accepted after the meeting, by no later than 5:00 p.m. CDT on Friday, August 26, 2022. Please submit comments to the Paducah Board Support Manager at the aforementioned email address. Please put ''Public Comment'' in the subject line. Individuals who wish to make oral statements pertaining to agenda items should contact Eric Roberts at the telephone number listed above. Requests must be received as soon as possible prior to the meeting and reasonable provision will be made to include the presentation in the agenda. The Deputy Designated Federal Officer is empowered to conduct the meeting in a fashion that will facilitate the orderly conduct of business. Individuals wishing to make oral public comments will be provided a maximum of five minutes to present their comments. Individuals wishing to submit written public comments should email them as directed above. The EM SSAB, Paducah, will hear oral public comments pertaining to its scope (clean-up standards and environmental restoration; waste management and disposition; stabilization and disposition of non-stockpile nuclear materials; excess facilities; future land use and long-term stewardship; risk assessment and management; and clean-up science and technology activities). Comments outside of the scope may be submitted via written statement as directed above.

Minutes: Minutes will be available by writing or calling Eric Roberts, Board Support Manager, Emerging Technology Center, Room 221, 4810 Alben Barkley Drive, Paducah, KY 42001; Phone: (270) 554–3004. Minutes will also be available at the following website: *https://www.energy.gov/pppo/pgdp-cab/listings/meeting-materials.*

Signed in Washington, DC, on July 19, 2022.

LaTanya Butler,

Deputy Committee Management Officer.

[FR Doc. 2022–15724 Filed 7–21–22; 8:45 am]

BILLING CODE 6450–01–P

DEPARTMENT OF ENERGY

Federal Energy Regulatory Commission

[Docket No. IC22–21–000]

Commission Information Collection Activity (FERC–555); Comment Request; Extension

AGENCY: Federal Energy Regulatory Commission.

ACTION: Notice of information collection and request for comments.

SUMMARY: In compliance with the requirements of the Paperwork Reduction Act of 1995, the Federal Energy Regulatory Commission (Commission or FERC) is soliciting public comment on the currently approved information collections, FERC–555 (Preservation of Records for Public Utilities and Licensees, Natural Gas Companies, and Oil Pipeline Companies).

DATES: Comments on the collections of information are due September 20, 2022.

ADDRESSES: You may submit your comments (identified by Docket No. IC22–21–000) on FERC–555 by one of the following methods:

Electronic filing through *https://www.ferc.gov* is preferred.

- *Electronic Filing:* Documents must be filed in acceptable native applications and print-to-PDF, but not in scanned or picture format.
- For those unable to file electronically, comments may be filed by USPS mail or by hand (Including Courier) Delivery:

○ *Mail via U.S. Postal Service Only:* Addressed to: Federal Energy Regulatory Commission, Secretary of the

Commission, 888 First Street NE, Washington, DC 20426.

○ *Hand (including courier) delivery:* Deliver to: Federal Energy Regulatory Commission, 12225 Wilkins Avenue, Rockville, MD 20852.

Instructions: All submissions must be formatted and filed in accordance with submission guidelines at: *https://www.ferc.gov.* For user assistance, contact FERC Online Support by email at *ferconlinesupport@ferc.gov,* or by phone at (866) 208–3676 (toll-free).

Docket: Users interested in receiving automatic notification of activity in this docket or in viewing/downloading comments and issuances in this docket may do so at *https://www.ferc.gov.*

FOR FURTHER INFORMATION CONTACT: Ellen Brown may be reached by email at *DataClearance@FERC.gov,* or by telephone at (202) 502–8663.

SUPPLEMENTARY INFORMATION:

Type of Request: Three-year extension of the information collection requirements with no changes to the current reporting requirements.

Title: Preservation of Records for Public Utilities and Licensees, Natural Gas Companies, and Oil Pipeline Companies.

OMB Control No.: 1902–0098.

Abstract: The Commission collects the information to carry out its responsibilities described in sections 301, 304 and 309 of the Federal Power Act (FPA),[1] sections 8, 10 and 16 of the Natural Gas Act (NGA),[2] and in the Interstate Commerce Act (ICA).[3]

The regulations for preservation of records at 18 CFR parts 125, 225, and 356 establish retention periods and other requirements for applicable records. These requirements apply to the public utilities, licensees, natural gas companies, and oil pipeline companies that are subject to the Commission's jurisdiction. Regulated entities use these records as the basis for required rate filings and reports to the Commission. The Commission's audit staff will use the records during compliance reviews, and the Commission's enforcement staff will use the information during investigations. In addition, the Commission's staff may use the records for special analyses on subjects such as jurisdictional entities' responses to extreme weather events.

On January 8, 1999 the Commission issued AI99–2–000, an Accounting Issuance providing guidance on records storage media.[4] More specifically, the Commission gave each jurisdictional company the flexibility to select its own storage media. The storage media selected must have a life expectancy equal to the applicable record period unless the quality of the data transferred from one media to another with no loss of data would exceed the record period.

Types of Respondents: Electric utilities, licensees, natural gas companies, and oil pipeline companies.

Estimate of Annual Burden: The Commission estimates the annual public reporting burden for the information collection as:

FERC–555: PRESERVATION OF RECORDS FOR PUBLIC UTILITIES AND LICENSEES, NATURAL GAS COMPANIES, AND OIL PIPELINE COMPANIES

Number of respondents	Annual number of responses per respondent	Total number of responses	Average burden hrs. & cost per response [5]	Total annual burden hours & total annual cost
(1)	(2)	(1) * (2) = (3)	(4)	(3) * (4) = (5)
509	1	509	5,218 hrs.; $453,966	2,655,962 hrs.; $231,068,694

Comments are invited on: (1) whether the collection of information is necessary for the proper performance of the functions of the Commission, including whether the information will have practical utility; (2) the accuracy of the agency's estimate of the burden and cost of the collection of information, including the validity of the methodology and assumptions used; (3) ways to enhance the quality, utility and clarity of the information collection; and (4) ways to minimize the burden of the collection of information on those who are to respond, including the use of automated collection techniques or other forms of information technology.

Dated: July 18, 2022.

Debbie-Anne A. Reese,

Deputy Secretary.

[FR Doc. 2022–15715 Filed 7–21–22; 8:45 am]

BILLING CODE 6717–01–P

DEPARTMENT OF ENERGY

Federal Energy Regulatory Commission

[Docket No. CP22–488–000]

WBI Energy Transmission, Inc.; Notice of Request Under Blanket Authorization and Establishing Intervention and Protest Deadline

Take notice that on July 8, 2022 WBI Energy Transmission, Inc. (WBI Energy) filed a prior notice request for authorization, in accordance with 18 CFR Sections 157.205, 157.208, and 157.210 of the Federal Energy Regulatory Commission's (Commission) regulations and WBI Energy's blanket certificate issued in Docket Nos. CP82–487–000 for authorization to construct and operate natural gas pipeline facilities in Phillips and Valley Counties, Montana and abandon in place 1,965 feet of natural gas mainline. The estimated cost of the project will be about $10 million.

Specifically, WBI Energy proposes to construct and operate approximately 17.2 miles of 4-inch diameter natural gas mainline facilities to connect two sections of WBI Energy's existing Line Section 8 that are not physically connected and abandon in place 1,965 feet of 6-inch diameter natural gas mainline, all as more fully set forth in the application which is on file with the Commission and open for public inspection.

In addition to publishing the full text of this document in the **Federal Register**, the Commission provides all interested persons an opportunity to view and/or print the contents of this document via the internet through the Commission's Home Page (*https://ferc.gov*) using the ''eLibrary'' link. Enter the docket number excluding the last three digits in the docket number field to access the document. At this time, the Commission has suspended

[1] 16 U.S.C. 825, 825c and 825h.

[2] 15 U.S.C. 717g, 717i, and 717*o*.

[3] 49 U.S.C. 60502.

[4] The Accounting Issuance can be found in the FERC eLibrary by typing the docket number (*i.e.,* AI99–2–000) in the eLibrary Search Form, within the field labeled ''Enter Docket Number.''

[5] Commission staff estimates that the average industry hourly cost for this information collection is approximated by the FERC 2021 average hourly costs for wages and benefits, *i.e.,* $87.00/hour.

access to the Commission's Public Reference Room, due to the proclamation declaring a National Emergency concerning the Novel Coronavirus Disease (COVID–19), issued by the President on March 13, 2020. For assistance, contact the Federal Energy Regulatory Commission at *FERCOnlineSupport@ferc.gov* or call toll-free, (886) 208–3676 or TYY, (202) 502–8659.

Any questions concerning this application should be directed to Lori Myerchin, Director, Regulatory Affairs and Transportation Services—WBI Energy Transmission Inc., P.O. Box 5601, Bismarck, North Dakota 58506–5601 Phone (701) 530–1563 Email: *lori.myerchin@wbienergy.com.*

Pursuant to Section 157.9 of the Commission's Rules of Practice and Procedure,[1] within 90 days of this Notice the Commission staff will either: complete its environmental review and place it into the Commission's public record (eLibrary) for this proceeding; or issue a Notice of Schedule for Environmental Review. If a Notice of Schedule for Environmental Review is issued, it will indicate, among other milestones, the anticipated date for the Commission staff's issuance of the final environmental impact statement (FEIS) or environmental assessment (EA) for this proposal. The filing of an EA in the Commission's public record for this proceeding or the issuance of a Notice of Schedule for Environmental Review will serve to notify federal and state agencies of the timing for the completion of all necessary reviews, and the subsequent need to complete all federal authorizations within 90 days of the date of issuance of the Commission staff's FEIS or EA.

Public Participation

There are three ways to become involved in the Commission's review of this project: you can file a protest to the project, you can file a motion to intervene in the proceeding, and you can file comments on the project. There is no fee or cost for filing protests, motions to intervene, or comments. The deadline for filing protests, motions to intervene, and comments is 5:00 p.m. Eastern Time on September 16, 2022. How to file protests, motions to intervene, and comments is explained below.

Protests

Pursuant to section 157.205 of the Commission's regulations under the NGA,[2] any person [3] or the Commission's staff may file a protest to the request. If no protest is filed within the time allowed or if a protest is filed and then withdrawn within 30 days after the allowed time for filing a protest, the proposed activity shall be deemed to be authorized effective the day after the time allowed for protest. If a protest is filed and not withdrawn within 30 days after the time allowed for filing a protest, the instant request for authorization will be considered by the Commission.

Protests must comply with the requirements specified in section 157.205(e) of the Commission's regulations,[4] and must be submitted by the protest deadline, which is September 16, 2022. A protest may also serve as a motion to intervene so long as the protestor states it also seeks to be an intervenor.

Interventions

Any person has the option to file a motion to intervene in this proceeding. Only intervenors have the right to request rehearing of Commission orders issued in this proceeding and to subsequently challenge the Commission's orders in the U.S. Circuit Courts of Appeal.

To intervene, you must submit a motion to intervene to the Commission in accordance with Rule 214 of the Commission's Rules of Practice and Procedure [5] and the regulations under the NGA [6] by the intervention deadline for the project, which is September 16, 2022. As described further in Rule 214, your motion to intervene must state, to the extent known, your position regarding the proceeding, as well as your interest in the proceeding. For an individual, this could include your status as a landowner, ratepayer, resident of an impacted community, or recreationist. You do not need to have property directly impacted by the project in order to intervene. For more information about motions to intervene, refer to the FERC website at *https://www.ferc.gov/resources/guides/how-to/intervene.asp.*

All timely, unopposed motions to intervene are automatically granted by operation of Rule 214(c)(1). Motions to intervene that are filed after the intervention deadline are untimely and may be denied. Any late-filed motion to intervene must show good cause for being late and must explain why the time limitation should be waived and provide justification by reference to factors set forth in Rule 214(d) of the Commission's Rules and Regulations. A person obtaining party status will be placed on the service list maintained by the Secretary of the Commission and will receive copies (paper or electronic) of all documents filed by the applicant and by all other parties.

Comments

Any person wishing to comment on the project may do so. The Commission considers all comments received about the project in determining the appropriate action to be taken. To ensure that your comments are timely and properly recorded, please submit your comments on or before September 16, 2022. The filing of a comment alone will not serve to make the filer a party to the proceeding. To become a party, you must intervene in the proceeding.

How To File Protests, Interventions, and Comments

There are two ways to submit protests, motions to intervene, and comments. In both instances, please reference the Project docket number CP22–488–000 in your submission.

(1) You may file your protest, motion to intervene, and comments by using the Commission's eFiling feature, which is located on the Commission's website (*www.ferc.gov*) under the link to Documents and Filings. New eFiling users must first create an account by clicking on ''eRegister.'' You will be asked to select the type of filing you are making; first select General'' and then select ''Protest'', ''Intervention'', or ''Comment on a Filing''; or [7]

(2) You can file a paper copy of your submission by mailing it to the address below. Your submission must reference the Project docket number CP22–488–000.

To mail via USPS, use the following address: Kimberly D. Bose, Secretary, Federal Energy Regulatory Commission, 888 First Street NE, Washington, DC 20426.

To mail via any other courier, use the following address: Kimberly D. Bose, Secretary, Federal Energy Regulatory Commission, 12225 Wilkins Avenue, Rockville, Maryland 20852.

[1] 18 CFR (Code of Federal Regulations) 157.9.

[2] 18 CFR 157.205.

[3] Persons include individuals, organizations, businesses, municipalities, and other entities. 18 CFR 385.102(d).

[4] 18 CFR 157.205(e).

[5] 18 CFR 385.214.

[6] 18 CFR 157.10.

[7] Additionally, you may file your comments electronically by using the eComment feature, which is located on the Commission's website at *www.ferc.gov* under the link to Documents and Filings. Using eComment is an easy method for interested persons to submit brief, text-only comments on a project. The eFiling feature includes a document-less intervention option; for more information, visit *https://www.ferc.gov/docs-filing/efiling/document-less-intervention.pdf.*

The Commission encourages electronic filing of submissions (option 1 above) and has eFiling staff available to assist you at (202) 502–8258 or *FercOnlineSupport@ferc.gov.*

Protests and motions to intervene must be served on the applicant either by mail or email (with a link to the document) at: Lori Myerchin, Director, Regulatory Affairs and Transportation Services—WBI Energy Transmission Inc., P.O. Box 5601, Bismarck, North Dakota 58506–5601 Email: *lori.myerchin@wbienergy.com.*

Any subsequent submissions by an intervenor must be served on the applicant and all other parties to the proceeding. Contact information for parties can be downloaded from the service list at the eService link on FERC Online.

Tracking the Proceeding

Throughout the proceeding, additional information about the project will be available from the Commission's Office of External Affairs, at (866) 208–FERC, or on the FERC website at *www.ferc.gov* using the ''eLibrary'' link as described above. The eLibrary link also provides access to the texts of all formal documents issued by the Commission, such as orders, notices, and rulemakings.

In addition, the Commission offers a free service called eSubscription which allows you to keep track of all formal issuances and submittals in specific dockets. This can reduce the amount of time you spend researching proceedings by automatically providing you with notification of these filings, document summaries, and direct links to the documents. For more information and to register, go to *www.ferc.gov/docs-filing/esubscription.asp.*

Dated: July 18, 2022.

Debbie-Anne A. Reese,

Deputy Secretary.

[FR Doc. 2022–15716 Filed 7–21–22; 8:45 am]

BILLING CODE 6717–01–P

DEPARTMENT OF ENERGY

Federal Energy Regulatory Commission

[Project No. 3509–042]

Little Falls Hydroelectric Associates, LP; Notice of Waiver Period for Water Quality Certification Application

On July 14, 2022, Little Falls Hydroelectric Associates, LP, submitted to the Federal Energy Regulatory Commission (Commission) a copy of its application for a Clean Water Act section 401(a)(1) water quality certification filed with the New York State Department of Environmental Conservation (New York DEC), in conjunction with the above captioned project. Pursuant to 40 CFR 121.6 and section [4.34(b)(5), 5.23(b), 153.4, or 157.22] of the Commission's regulations,[1] we hereby notify the New York DEC of the following:

Date of Receipt of the Certification Request: July 14, 2022.

Reasonable Period of Time to Act on the Certification Request: July 14, 2023.

If New York DEC fails or refuses to act on the water quality certification request on or before the above date, then the agency certifying authority is deemed waived pursuant to section 401(a)(1) of the Clean Water Act, 33 U.S.C. 1341(a)(1).

Dated: July 18, 2022.

Debbie-Anne A. Reese,

Deputy Secretary.

[FR Doc. 2022–15720 Filed 7–21–22; 8:45 am]

BILLING CODE 6717–01–P

DEPARTMENT OF ENERGY

Federal Energy Regulatory Commission

[Project No. 15277–000]

Rye Bailey Hydroelectric, LLC; Notice of Preliminary Permit Application Accepted for Filing and Soliciting Comments, Motions To Intervene, and Competing Applications

On June 6, 2022, Rye Bailey Hydroelectric, LLC, filed an application for a preliminary permit, pursuant to section 4(f) of the Federal Power Act (FPA), proposing to study the feasibility of hydropower at the existing U.S. Army Corps of Engineers' (Corps) R.D. Bailey Dam located on the Guyandotte River in Mingo and Wyoming Counties, West Virginia. The sole purpose of a preliminary permit, if issued, is to grant the permit holder priority to file a license application during the permit term. A preliminary permit does not authorize the permit holder to perform any land-disturbing activities or otherwise enter upon lands or waters owned by others without the owners' express permission.

The proposed R.D. Bailey Hydroelectric Project would consist of the following: (1) a new 40-foot-wide, 60-foot-long powerhouse to be located downstream of the Corps dam along the northern bank; (2) a new concrete bifurcation chamber at the end of an existing conduit to divide flows between the stilling basin and the powerhouse; (3) a new 15-foot-diameter penstock approximately 50 feet long; (4) two turbine-generator units with a total generating capacity of 8 megawatts; (5) a new 100-foot-wide by 400-foot-long tailrace; (6) a new substation with a step-up transformer; (7) a new 2.5-mile-long, 46-kilovolt transmission line; and (8) appurtenant facilities. The proposed project would have an estimated annual generation of 30,000 megawatt-hours.

Applicant Contact: Michael Rooney, Rye Development, LLC, 100 S. Olive Street, West Palm Beach, FL 33401; phone: (412) 400–4186; Erik Steimle, Rye Development, LLC, 100 S Olive Street, West Palm Beach, FL 33401; phone: (503) 998–0230.

FERC Contact: Monir Chowdhury; phone: (202) 502–6736.

Deadline for filing comments, motions to intervene, competing applications (without notices of intent), or notices of intent to file competing applications: 60 days from the issuance of this notice. Competing applications and notices of intent must meet the requirements of 18 CFR 4.36.

The Commission strongly encourages electronic filing. Please file comments, motions to intervene, notices of intent, and competing applications using the Commission's eFiling system at *https://ferconline.ferc.gov/FERCOnline.aspx.* Commenters can submit brief comments up to 6,000 characters, without prior registration, using the eComment system at *https://ferconline.ferc.gov/QuickComment.aspx.* You must include your name and contact information at the end of your comments. For assistance, please contact FERC Online Support at *FERCOnlineSupport@ferc.gov,* (866) 208–3676 (toll free), or (202) 502–8659 (TTY). In lieu of electronic filing, you may submit a paper copy. Submissions sent via the U.S. Postal Service must be addressed to: Kimberly D. Bose, Secretary, Federal Energy Regulatory Commission, 888 First Street NE, Room 1A, Washington, DC 20426. Submissions sent via any other carrier must be addressed to: Kimberly D. Bose, Secretary, Federal Energy Regulatory Commission, 12225 Wilkins Avenue, Rockville, Maryland 20852.

More information about this project, including a copy of the application, can be viewed or printed on the ''eLibrary'' link of the Commission's website at *https://elibrary.ferc.gov/eLibrary/search.* Enter the docket number (P–15277) in the docket number field to access the document. For assistance, contact FERC Online Support.

[1] 18 CFR [4.34(b)(5)/5.23(b)/153.4/157.22].

Dated: July 18, 2022.

Debbie-Anne A. Reese,

Deputy Secretary.

[FR Doc. 2022–15719 Filed 7–21–22; 8:45 am]

BILLING CODE 6717–01–P

DEPARTMENT OF ENERGY

Federal Energy Regulatory Commission

Combined Notice of Filings #1

Take notice that the Commission received the following electric rate filings:

Docket Numbers: ER14–1480–001.
Applicants: KMC Thermo, LLC.
Description: KMC Thermo, LLC submits supplemental information to its May 31, 2022, Informational Filing Pursuant to Schedule 2 of PJM.
Filed Date: 7/13/22.
Accession Number: 20220713–5213.
Comment Date: 5 p.m. ET 7/27/22.

Docket Numbers: ER22–1917–001.
Applicants: Midcontinent Independent System Operator, Inc., Ameren Transmission Company of Illinois.
Description: Tariff Amendment: Midcontinent Independent System Operator, Inc. submits tariff filing per 35.17(b): 2022–07–18_SA 3826 ATXI–AECI Substitute TIA to be effective 5/21/2022.
Filed Date: 7/18/22.
Accession Number: 20220718–5096.
Comment Date: 5 p.m. ET 8/8/22.

Docket Numbers: ER22–2388–000.
Applicants: Mississippi Power Company.
Description: § 205(d) Rate Filing: MRA 30 Rate Case Filing to be effective 7/15/2022.
Filed Date: 7/15/22.
Accession Number: 20220715–5164.
Comment Date: 5 p.m. ET 8/5/22.

Docket Numbers: ER22–2389–000.
Applicants: Southwest Power Pool, Inc.
Description: § 205(d) Rate Filing: 3719 Chilocco Wind Farm GIA Cancellation to be effective 7/5/2022.
Filed Date: 7/18/22.
Accession Number: 20220718–5013.
Comment Date: 5 p.m. ET 8/8/22.

Docket Numbers: ER22–2390–000.
Applicants: American Illuminating Company, LLC.
Description: Tariff Amendment: Cancellation of Market Based Rate Tariff to be effective 7/19/2022.
Filed Date: 7/18/22.
Accession Number: 20220718–5024.
Comment Date: 5 p.m. ET 8/8/22.

Docket Numbers: ER22–2391–000.
Applicants: Pedricktown Cogeneration Company LP.
Description: Tariff Amendment: Notice of Cancellation to be effective 7/19/2022.
Filed Date: 7/18/22.
Accession Number: 20220718–5067.
Comment Date: 5 p.m. ET 8/8/22.

Docket Numbers: ER22–2392–000.
Applicants: Arlington Solar, LLC.
Description: § 205(d) Rate Filing: Arlington Solar, LLC First Amendment SFA with Arlington Solar II & III to be effective 9/17/2022.
Filed Date: 7/18/22.
Accession Number: 20220718–5073.
Comment Date: 5 p.m. ET 8/8/22.

Docket Numbers: ER22–2393–000.
Applicants: Northern Indiana Public Service Company LLC.
Description: § 205(d) Rate Filing: TDSIC WVPA CIAC Agreement to be effective 7/29/2022.
Filed Date: 7/18/22.
Accession Number: 20220718–5088.
Comment Date: 5 p.m. ET 8/8/22.

Docket Numbers: ER22–2394–000.
Applicants: Midcontinent Independent System Operator, Inc., American Transmission Company LLC.
Description: § 205(d) Rate Filing: Midcontinent Independent System Operator, Inc. submits tariff filing per 35.13(a)(2)(iii: 2022–07–18_SA 3866 ATC-Whitetail E&P (J1374) to be effective 7/19/2022.
Filed Date: 7/18/22.
Accession Number: 20220718–5103.
Comment Date: 5 p.m. ET 8/8/22.

Docket Numbers: ER22–2395–000.
Applicants: PacifiCorp.
Description: § 205(d) Rate Filing: BPA NITSA—(Idaho Falls Power) Rev 6 to be effective 7/1/2022.
Filed Date: 7/18/22.
Accession Number: 20220718–5107.
Comment Date: 5 p.m. ET 8/8/22.

Docket Numbers: ER22–2396–000.
Applicants: Sapphire Sky Wind Energy LLC.
Description: § 205(d) Rate Filing: Revised Market-Based Rate Tariff Filing to be effective 9/17/2022.
Filed Date: 7/18/22.
Accession Number: 20220718–5133.
Comment Date: 5 p.m. ET 8/8/22.

Docket Numbers: ER22–2397–000.
Applicants: Number Three Wind LLC.
Description: § 205(d) Rate Filing: Revised Market-Based Rate Tariff Filing to be effective 9/17/2022.
Filed Date: 7/18/22.
Accession Number: 20220718–5134.
Comment Date: 5 p.m. ET 8/8/22.

Docket Numbers: ER22–2398–000.
Applicants: New England Power Company.
Description: § 205(d) Rate Filing: 2022–07–18 Filing TSA–NEP–110 Schedule 20A Phase I/II HVDC–TF Service Agreement to be effective 12/31/9998.
Filed Date: 7/18/22.
Accession Number: 20220718–5135.
Comment Date: 5 p.m. ET 8/8/22.

Docket Numbers: ER22–2399–000.
Applicants: Phobos Solar, LLC.
Description: Baseline eTariff Filing: Phobos Solar, LLC MBR Tariff to be effective 8/31/2022.
Filed Date: 7/18/22.
Accession Number: 20220718–5136.
Comment Date: 5 p.m. ET 8/8/22.

Docket Numbers: ER22–2400–000.
Applicants: PGR 2021 Lessee 11, LLC.
Description: Baseline eTariff Filing: PGR 2021 Lessee 11, LLC MBR Tariff to be effective 8/31/2022.
Filed Date: 7/18/22.
Accession Number: 20220718–5137.
Comment Date: 5 p.m. ET 8/8/22.

Docket Numbers: ER22–2401–000.
Applicants: Cabin Creek Solar, LLC.
Description: Baseline eTariff Filing: Cabin Creek Solar, LLC MBR Tariff to be effective 8/31/2022.
Filed Date: 7/18/22.
Accession Number: 20220718–5140.
Comment Date: 5 p.m. ET 8/8/22.

Docket Numbers: ER22–2402–000.
Applicants: NSTAR Electric Company.
Description: Compliance filing: Park City Wind LLC—Settlement Transmission Support Agreement to be effective 3/3/2022.
Filed Date: 7/18/22.
Accession Number: 20220718–5141.
Comment Date: 5 p.m. ET 8/8/22.

Docket Numbers: ER22–2403–000.
Applicants: PGR 2021 Lessee 12, LLC.
Description: Baseline eTariff Filing: PGR 2021 Lessee 12, LLC MBR Tariff to be effective 8/31/2022.
Filed Date: 7/18/22.
Accession Number: 20220718–5143.
Comment Date: 5 p.m. ET 8/8/22.

Docket Numbers: ER22–2404–000.
Applicants: Gunsight Solar, LLC.
Description: Baseline eTariff Filing: Gunsight Solar, LLC MBR Tariff to be effective 8/31/2022.
Filed Date: 7/18/22.
Accession Number: 20220718–5144.
Comment Date: 5 p.m. ET 8/8/22.

Docket Numbers: ER22–2405–000.
Applicants: PGR 2021 Lessee 15, LLC.
Description: Baseline eTariff Filing: PGR 2021 Lessee 15, LLC MBR Tariff to be effective 8/31/2022.
Filed Date: 7/18/22.
Accession Number: 20220718–5145.
Comment Date: 5 p.m. ET 8/8/22.

Docket Numbers: ER22–2406–000.

Applicants: Allora Solar, LLC.
Description: Baseline eTariff Filing: Allora Solar, LLC MBR Tariff to be effective 8/31/2022.
Filed Date: 7/18/22.
Accession Number: 20220718–5146.
Comment Date: 5 p.m. ET 8/8/22.

Docket Numbers: ER22–2407–000.
Applicants: PGR 2021 Lessee 19, LLC.
Description: Baseline eTariff Filing: PGR 2021 Lessee 19, LLC MBR Tariff to be effective 8/31/2022.
Filed Date: 7/18/22.
Accession Number: 20220718–5147.
Comment Date: 5 p.m. ET 8/8/22.

The filings are accessible in the Commission's eLibrary system (*https://elibrary.ferc.gov/idmws/search/fercgensearch.asp*) by querying the docket number.

Any person desiring to intervene or protest in any of the above proceedings must file in accordance with Rules 211 and 214 of the Commission's Regulations (18 CFR 385.211 and 385.214) on or before 5:00 p.m. Eastern time on the specified comment date. Protests may be considered, but intervention is necessary to become a party to the proceeding.

eFiling is encouraged. More detailed information relating to filing requirements, interventions, protests, service, and qualifying facilities filings can be found at: *https://www.ferc.gov/docs-filing/efiling/filing-req.pdf.* For other information, call (866) 208–3676 (toll free). For TTY, call (202) 502–8659.

Dated: July 18, 2022.

Debbie-Anne A. Reese,

Deputy Secretary.

[FR Doc. 2022–15717 Filed 7–21–22; 8:45 am]

BILLING CODE 6717–01–P

DEPARTMENT OF ENERGY

Federal Energy Regulatory Commission

[Docket No. NJ22–11–000]

Orlando Utilities Commission; Notice of Petition for Declaratory Order

Take notice that on July 15, 2022, pursuant to the Federal Energy Regulatory Commission's (Commission) Rules of Practice and Procedure, 18 CFR 35.28(e), Orlando Utilities Commission (OUC), submitted a Petition for Declaratory Order and revisions to its non-jurisdictional Open Access Transmission Tariff to be effective 10/1/2022.

Any person desiring to intervene or to protest this filing must file in accordance with Rules 211 and 214 of the Commission's Rules of Practice and Procedure (18 CFR 385.211, 385.214). Protests will be considered by the Commission in determining the appropriate action to be taken but will not serve to make protestants parties to the proceeding. Any person wishing to become a party must file a notice of intervention or motion to intervene, as appropriate. Such notices, motions, or protests must be filed on or before the comment date. On or before the comment date, it is not necessary to serve motions to intervene or protests on persons other than the Petitioner.

The Commission strongly encourages electronic filings of comments, protests and interventions in lieu of paper using the ''eFiling'' link at *https://www.ferc.gov.* Persons unable to file electronically may mail similar pleadings to the Federal Energy Regulatory Commission, 888 First Street NE, Washington, DC 20426. Hand delivered submissions in docketed proceedings should be delivered to Health and Human Services, 12225 Wilkins Avenue, Rockville, Maryland 20852.

In addition to publishing the full text of this document in the **Federal Register**, the Commission provides all interested persons an opportunity to view and/or print the contents of this document via the internet through the Commission's Home Page (*https://www.ferc.gov*) using the ''eLibrary'' link. Enter the docket number excluding the last three digits in the docket number field to access the document. At this time, the Commission has suspended access to the Commission's Public Reference Room, due to the proclamation declaring a National Emergency concerning the Novel Coronavirus Disease (COVID–19), issued by the President on March 13, 2020. For assistance, contact the Federal Energy Regulatory Commission at *FERCOnlineSupport@ferc.gov* or call toll-free, (886) 208–3676 or TYY, (202) 502–8659.

Comment Date: 5:00 p.m. Eastern Time on August 15, 2022.

Dated: July 18, 2022.

Debbie-Anne A. Reese,

Deputy Secretary.

[FR Doc. 2022–15714 Filed 7–21–22; 8:45 am]

BILLING CODE 6717–01–P

DEPARTMENT OF ENERGY

Federal Energy Regulatory Commission

[Docket No. AD21–15–000]

Joint Federal-State Task Force on Electric Transmission; Supplemental Notice of Meeting

As first announced in the Commission's May 23, 2022 Notice [1] in the above-captioned docket, the next public meeting of the Joint Federal-State Task Force on Electric Transmission (Task Force) will be held on July 20, 2022, at the Sheraton San Diego Hotel and Marina in San Diego, California, from approximately 1:00 p.m. to 5:30 p.m. Pacific time. Commissioners may attend and participate in this meeting. Attached to this Notice is an agenda for the meeting.

The meeting will be open to the public for listening and observing and on the record. In light of the current Center for Disease Control guidance for San Diego County where community levels are high for the Novel Coronavirus Disease (COVID–19) [2] and the Safer Federal Workforce Task Force's requirements, all persons attending the Task Force meeting on July 20 are required to wear masks during the meeting. There is no fee for attendance and registration is not required. This conference will be transcribed. Transcripts will be available for a fee from Ace Reporting, 202–347–3700.

Discussions at the meeting may involve issues raised in proceedings that are currently pending before the Commission. These proceedings include, but are not limited to:

New York Independent System Operator, Inc	Docket No. ER22–2154–000.
Consolidated Edison Company of New York, Inc	Docket No. ER22–2152–000.
Southwest Power Pool, Inc	Docket No. ER22–1846–000.
WestConnect Public Utilities	Docket No. ER22–1105–000.
Midcontinent Independent System Operator, Inc	Docket No. ER22–995–000.
SOO Green HVDC Link ProjectCo, LLC v. *PJM Interconnection, LLC*	Docket Nos. EL21–103–000; EL21–85–000.

[1] *Joint Fed.-State Task Force on Elec. Transmission,* Notice, Docket No. AD21–15–000 (issued May 23, 2022).

[2] Ctr. for Disease Control and Prevention, COVID–19 by County (July 14, 2022), *https://www.cdc.gov/coronavirus/2019-ncov/your-health/covid-by-county.html.*

Neptune Regional Transmission System, LLC and Long Island Power Authority v. *PJM Interconnection, L.L.C.*	Docket No. EL21–39–000.

Commission conferences are accessible under section 508 of the Rehabilitation Act of 1973. For accessibility accommodations, please send an email to *accessibility@ferc.gov* or call toll free 1–866–208–3372 (voice) or 202–208–8659 (TTY), or send a fax to 202–208–2106 with the required accommodations.

More information about the Task Force, including frequently asked questions, is available here: *https://www.ferc.gov/TFSOET.* For more information about this meeting, please contact: Gretchen Kershaw, 202–502–8213, *gretchen.kershaw@ferc.gov;* or Jennifer Murphy, 202–898–1350, *jmurphy@naruc.org.* For information related to logistics, please contact Benjamin Williams, 202–502–8506, *benjamin.williams@ferc.gov;* or Rob Thormeyer, 202–502–8694, *robert.thormeyer@ferc.gov.*

Dated: July 18, 2022.

Debbie-Anne A. Reese,

Deputy Secretary.

[FR Doc. 2022–15718 Filed 7–21–22; 8:45 am]

BILLING CODE 6717–01–P

ENVIRONMENTAL PROTECTION AGENCY

[EPA–HQ–OAR–2022–0077, EPA–HQ–OAR–2022–0084, etc.; FRL–10013–01–OAR]

Proposed Information Collection Request; Comment Request

AGENCY: Environmental Protection Agency (EPA).

ACTION: Notice.

SUMMARY: The U.S. Environmental Protection Agency (EPA) is planning to submit the below listed information collection requests (ICR) to the Office of Management and Budget (OMB) for review and approval in accordance with the Paperwork Reduction Act. Before doing so, EPA is soliciting public comments on specific aspects of the proposed information collection as described below. These are proposed extensions of the currently approved ICRs. An Agency may not conduct, or sponsor and a person is not required to respond to a collection of information unless it displays a currently valid OMB control number.

DATES: Comments must be submitted on or before September 20, 2022.

ADDRESSES: Submit your comments, referencing the Docket ID numbers provided for each item in the text, online using *https://www.regulations.gov* (our preferred method), by email to *a-and-r-docket@epa.gov,* or by mail to: EPA Docket Center, Environmental Protection Agency, Mail Code 28221T, 1200 Pennsylvania Ave. NW, Washington, DC 20460.

The EPA's policy is that all relevant comments received will be included in the public docket without change including any personal information provided, unless the comment includes profanity, threats, information claimed to be Confidential Business Information (CBI) or other information whose disclosure is restricted by statute.

FOR FURTHER INFORMATION CONTACT: Mr. Muntasir Ali, Sector Policies and Programs Division, (D243–05), Office of Air Quality Planning and Standards, U.S. Environmental Protection Agency, Research Triangle Park, North Carolina 27711; telephone number: (919) 541–0833; email address: *Ali.Muntasir@epa.gov.*

SUPPLEMENTARY INFORMATION: Supporting documents which explain in detail the information that the EPA will be collecting are available in the public docket for this ICR. The docket can be viewed online at *https://www.regulations.gov/* or in person at the EPA Docket Center, WJC West Building, Room 3334, 1301 Constitution Ave. NW, Washington, DC. The telephone number for the Docket Center is 202–566–1744. For additional information about EPA's public docket, visit *https://www.epa.gov/dockets.*

Pursuant to section 3506(c)(2)(A) of the PRA, the EPA is soliciting comments and information to enable it to: (i) evaluate whether the proposed collection of information is necessary for the proper performance of the functions of the Agency, including whether the information will have practical utility; (ii) evaluate the accuracy of the Agency's estimate of the burden of the proposed collection of information, including the validity of the methodology and assumptions used; (iii) enhance the quality, utility, and clarity of the information to be collected; and (iv) minimize the burden of the collection of information on those who are to respond, including through the use of appropriate automated electronic, mechanical, or other technological collection techniques or other forms of information technology, *e.g.,* permitting electronic submission of responses. Burden is defined at 5 CFR 1320.03(b). EPA will consider the comments received and amend the ICR as appropriate. The final ICR package will then be submitted to OMB for review and approval. At that time, EPA will issue another **Federal Register** notice to announce the submission of the ICR to OMB and the opportunity to submit additional comments to OMB.

General Abstract: For all the listed ICRs in this notice, owners and operators of affected facilities are required to comply with reporting and record keeping requirements for the general provisions of 40 CFR part 60, subpart A or part 63, subpart A, as well as the applicable specific standards. This includes submitting initial notifications, performance tests and periodic reports and results, and maintaining records of the occurrence and duration of any startup, shutdown, or malfunction in the operation of an affected facility, or any period during which the monitoring system is inoperative. These reports are used by EPA to determine compliance with the standards.

(1) *Docket ID Number:* EPA–HQ–OAR–2022–0077; NESHAP for Pulp and Paper Production (40 CFR part 63, subpart S) (Renewal); EPA ICR Number 1657.10; OMB Control Number 2060–0387; Expiration date January 31, 2023.

Respondents: Pulp and paper production facilities.

Respondent's obligation to respond: Mandatory (40 CFR part 63, subpart S).

Estimated number of respondents: 114.

Frequency of response: Initially, semiannually.

Estimated annual burden: 44,438 hours.

Estimated annual cost: $5,191,000, includes $841,000 annualized capital or O&M costs.

Changes in estimates: There is no projected change in burden from the previous ICR.

(2) *Docket ID Number:* EPA–HQ–OAR–2022–0084; NESHAP for Hazardous Waste Combustors (40 CFR part 63, subpart EEE) (Renewal); EPA ICR Number 1773.13; OMB Control Number 2060–0171; Expiration date January 31, 2023.

Respondents: Hazardous waste combustion units.

Respondent's obligation to respond: Mandatory (40 CFR part 63, subpart EEE).

Estimated number of respondents: 179.

Frequency of response: Semiannually, quarterly.

Estimated annual burden: 62,500 hours.

Estimated annual cost: $9,560,000, includes $2,890,000 annualized capital or O&M costs.

Changes in estimates: There is a projected decrease in burden due to anticipated shutdown of existing sources.

(3) *Docket ID Number:* EPA–HQ–OAR–2022–0085; NESHAP for Oil and Natural Gas Production (40 CFR part 63, subpart HH) (Renewal); EPA ICR Number 1788.13; OMB Control Number 2060–0417; Expiration date January 31, 2023.

Respondents: Oil and natural gas production facilities.

Respondent's obligation to respond: Mandatory (40 CFR part 63, subpart HH).

Estimated number of respondents: 4,669.

Frequency of response: Semiannually.

Estimated annual burden: 54,400 hours.

Estimated annual cost: $7,340,000, includes $1,040,000 annualized capital or O&M costs.

Changes in estimates: There is a projected increase in burden due to an increase in the number of sources subject to the regulation.

(4) *Docket ID Number:* EPA–HQ–OAR–2022–0087; NESHAP for Mineral Wool Production (40 CFR part 63, subpart DDD) (Renewal); EPA ICR Number 1799.11; OMB Control Number 2060–0362; Expiration date January 31, 2023.

Respondents: Mineral wool production facilities.

Respondent's obligation to respond: Mandatory (40 CFR part 63, subpart DDD).

Estimated number of respondents: 8.

Frequency of response: Semiannually.

Estimated annual burden: 2,130 hours.

Estimated annual cost: $308,000, includes $6,000 annualized capital or O&M costs.

Changes in estimates: There is no projected change in burden from the previous ICR.

(5) *Docket ID Number:* EPA–HQ–OAR–2022–0017; NESHAP for Petroleum Refineries: Catalytic Cracking Units, Reforming and Sulfur Units (40 CFR part 63, subpart UUU) (Renewal); EPA ICR Number 1844.12; OMB Control Number 2060–0554; Expiration date January 31, 2023.

Respondents: Petroleum refineries that operate catalytic cracking units, catalytic reforming units, and sulfur recovery units.

Respondent's obligation to respond: Mandatory (40 CFR part 63, subpart UUU).

Estimated number of respondents: 142.

Frequency of response: Initially, semiannually.

Estimated annual burden: 17,500 hours.

Estimated annual cost: $10,800,000, includes $8,780,000 annualized capital or O&M costs.

Changes in estimates: There is no projected change in burden from the previous ICR.

(6) *Docket ID Number:* EPA–HQ–OAR–2022–0019; NESHAP for the Manufacture of Amino/Phenolic Resins (40 CFR part 63, subpart OOO) (Renewal); EPA ICR Number 1869.12; OMB Control Number 2060–0434; Expiration date January 31, 2023.

Respondents: Amino/phenolic resin manufacturing facilities.

Respondent's obligation to respond: Mandatory (40 CFR part 63, subpart OOO).

Estimated number of respondents: 19.

Frequency of response: Initially, annually, semiannually.

Estimated annual burden: 23,300 hours.

Estimated annual cost: $4,910,000, includes $2,210,000 annualized capital or O&M costs.

Changes in estimates: There is no projected change in burden from the previous ICR.

(7) *Docket ID Number:* EPA–HQ–OAR–2022–0020; NESHAP for Publicly Owned Treatment Works (40 CFR part 63, subpart VVV) (Renewal); EPA ICR Number 1891.11; OMB Control Number 2060–0428; Expiration date January 31, 2021.

Respondents: Publicly-Owned Treatment Works (POTW).

Respondent's obligation to respond: Mandatory (40 CFR part 63, subpart VVV).

Estimated number of respondents: 13.

Frequency of response: Annually.

Estimated annual burden: 16 hours.

Estimated annual cost: $750, includes no annualized capital or O&M costs.

Changes in estimates: There is no projected change in burden from the previous ICR.

(8) *Docket ID Number:* EPA–HQ–OAR–2022–0022; Emission Guidelines for Hospital/Medical/Infectious Waste Incinerators (40 CFR part 60, subpart Ce and 40 CFR part 62, subpart HHH) (Renewal); EPA ICR Number 1899.10; OMB Control Number 2060–0422; Expiration date January 31, 2023.

Respondents: Hospital/medical/infectious waste incineration units.

Respondent's obligation to respond: Mandatory (40 CFR part 60, subpart Ce and 40 CFR part 62, subpart HHH).

Estimated number of respondents: 58.

Frequency of response: Annually, semiannually.

Estimated annual burden: 38,800 hours.

Estimated annual cost: $4,620,000, includes $479,000 annualized capital or O&M costs.

Changes in estimates: There is no projected change in burden from the previous ICR.

(9) *Docket ID Number:* EPA–HQ–OAR–2022–0024; NSPS for Commercial and Industrial Solid Waste Incineration Units (40 CFR part 60, subpart CCCC) (Renewal); EPA ICR Number 1926.09; OMB Control Number 2060–0450; Expiration date January 31, 2023.

Respondents: Commercial and industrial solid waste incineration units.

Respondent's obligation to respond: Mandatory (40 CFR part 60, subpart CCC).

Estimated number of respondents: 30.

Frequency of response: Annually, semiannually.

Estimated annual burden: 6,520 hours.

Estimated annual cost: $1,160,000, includes $406,000 annualized capital or O&M costs.

Changes in estimates: There is no projected change in burden from the previous ICR.

(10) *Docket ID Number:* EPA–HQ–OAR–2022–0027; NESHAP for Stationary Combustion Turbines (40 CFR part 63, subpart YYYY) (Renewal); EPA ICR Number 1967.09; OMB Control Number 2060–0540; Expiration date January 31, 2023.

Respondents: Stationary combustion turbines.

Respondent's obligation to respond: Mandatory (40 CFR part 63, subpart YYYY).

Estimated number of respondents: 122.

Frequency of response: Annually, semiannually.

Estimated annual burden: 1,430 hours.

Estimated annual cost: $166,000, includes no annualized capital or O&M costs.

Changes in estimates: There is no projected change in burden from the previous ICR.

(11) *Docket ID Number:* EPA–HQ–OAR–2022–0029; NESHAP for Plywood and Composite Wood Products (40 CFR part 63, subpart DDDD) (Renewal); EPA ICR Number 1984.10; OMB Control Number 2060–0552; Expiration date January 31, 2023.

Respondents: Plywood and composite products manufacturing facilities.

Respondent's obligation to respond: Mandatory (40 CFR part 63, subpart DDDD).

Estimated number of respondents: 244.

Frequency of response: Initially, semiannually.

Estimated annual burden: 29,900 hours.

Estimated annual cost: $3,550,000, includes $105,000 annualized capital or O&M costs.

Changes in estimates: There is no projected change in burden from the previous ICR.

(12) *Docket ID Number:* EPA–HQ–OAR–2022–0033; NESHAP for Automobile and Light-duty Truck Surface Coating (40 CFR part 63, subpart IIII) (Renewal); EPA ICR Number 2045.10; OMB Control Number 2060–0550; Expiration date January 31, 2023.

Respondents: Automobile and light-duty truck surface coating operations.

Respondent's obligation to respond: Mandatory (40 CFR part 63, subpart IIII).

Estimated number of respondents: 43.

Frequency of response: Semiannually.

Estimated annual burden: 17,500 hours.

Estimated annual cost: $2,070,000, includes $51,600 annualized capital or O&M costs.

Changes in estimates: There is no projected change in burden from the previous ICR.

(13) *Docket ID Number:* EPA–HQ–OAR–2022–0035; NESHAP for Iron and Steel Foundries (40 CFR part 63, subpart EEEEE) (Renewal); EPA ICR Number 2096.10; OMB Control Number 2060–0543; Expiration date January 31, 2023.

Respondents: Iron and steel foundries.

Respondent's obligation to respond: Mandatory (40 CFR part 63, subpart EEEEE).

Estimated number of respondents: 45.

Frequency of response: Initially, semiannually.

Estimated annual burden: 15,000 hours.

Estimated annual cost: $1,400,000, includes $206,000 annualized capital or O&M costs.

Changes in estimates: There is a projected increase in burden due to implementation of regulatory revisions.

(14) *Docket ID Number:* EPA–HQ–OAR–2022–0036; NESHAP for Miscellaneous Coating Manufacturing (40 CFR part 63, subpart HHHHH) (Renewal); EPA ICR Number 2115.08; OMB Control Number 2060–0535; Expiration date January 31, 2023.

Respondents: Miscellaneous coating manufacturing facilities.

Respondent's obligation to respond: Mandatory (40 CFR part 63, subpart HHHHH).

Estimated number of respondents: 43.

Frequency of response: Semiannually.

Estimated annual burden: 54,600 hours.

Estimated annual cost: $7,240,000, includes $907,000 annualized capital or O&M costs.

Changes in estimates: There is a projected increase in burden due to implementation of regulatory revisions.

(15) *Docket ID Number:* EPA–HQ–OAR–2022–0040; NESHAP for Clay Ceramics Manufacturing, Glass Manufacturing, and Secondary Nonferrous Metals Processing Area Sources (40 CFR part 63, subparts RRRRRR, SSSSSS, and TTTTTT) (Renewal); EPA ICR Number 2274.07; OMB Control Number 2060–0606; Expiration date January 31, 2023.

Respondents: Clay ceramics manufacturing facilities, glass manufacturing facilities, and secondary nonferrous metals processing facilities.

Respondent's obligation to respond: Mandatory (40 CFR part 63, subparts RRRRRR, SSSSSS, and TTTTTT).

Estimated number of respondents: 82.

Frequency of response: Initially, annually.

Estimated annual burden: 1,950 hours.

Estimated annual cost: $235,000, includes $13,200 annualized capital or O&M costs.

Changes in estimates: There is no projected change in burden from the previous ICR.

(16) *Docket ID Number:* EPA–HQ–OAR–2022–0435; Emission Guidelines for Municipal Solid Waste Landfills (40 CFR part 60, subpart Cf) (Renewal); EPA ICR Number 2522.04; OMB Control Number 2060–0720; Expiration date January 31, 2023.

Respondents: Municipal solid waste landfills.

Respondent's obligation to respond: Mandatory (40 CFR part 60, subpart Cf).

Estimated number of respondents: 1,912.

Frequency of response: Initially, annually.

Estimated annual burden: 634,000 hours.

Estimated annual cost: $45,600,000, includes $2,760,000 annualized capital or O&M costs.

Changes in estimates: There is a projected decrease in burden due to more accurate estimates of facilities subject to monitoring and testing requirements and more accurate estimates of facilities subject to state plans.

(17) *Docket ID Number:* EPA–HQ–OAR–2022–0082; NSPS for Hospital/Medical/Infectious Waste Incinerators (40 CFR part 60, subpart Ec) (Renewal); EPA ICR Number 1730.12; OMB Control Number 2060–0363; Expiration date February 28, 2023.

Respondents: Hospital/medical/infectious waste incineration units.

Respondent's obligation to respond: Mandatory (40 CFR part 60, subpart Ec).

Estimated number of respondents: 11.

Frequency of response: Initially, annually, semiannually.

Estimated annual burden: 7,410 hours.

Estimated annual cost: $1,360,000, includes $519,000 annualized capital or O&M costs.

Changes in estimates: There is a projected increase in burden due to an increase in the number of sources subject to the regulation.

(18) *Docket ID Number:* EPA–HQ–OAR–2022–0058; NSPS for Sewage Sludge Treatment Plants (40 CFR part 60, subpart O) (Renewal); EPA ICR Number 1063.15; OMB Control Number 2060–0035; Expiration date March 31, 2023.

Respondents: Sewage sludge treatment plants.

Respondent's obligation to respond: Mandatory (40 CFR part 60, subpart O).

Estimated number of respondents: 86.

Frequency of response: Initially, semiannually.

Estimated annual burden: 9,690 hours.

Estimated annual cost: $4,170,000, includes $3,050,000 annualized capital or O&M costs.

Changes in estimates: There is no projected change in burden from the previous ICR.

(19) *Docket ID Number:* EPA–HQ–OAR–2022–0062; NSPS for Phosphate Rock Plants (40 CFR part 60, subpart NN) (Renewal); EPA ICR Number 1078.13; OMB Control Number 2060–0111; Expiration date March 31, 2023.

Respondents: Phosphate rock plants.

Respondent's obligation to respond: Mandatory (40 CFR part 60, subpart NN).

Estimated number of respondents: 15.

Frequency of response: Semiannually.

Estimated annual burden: 1,800 hours.

Estimated annual cost: $335,000, includes $126,000 annualized capital or O&M costs.

Changes in estimates: There is no projected change in burden from the previous ICR.

(20) *Docket ID Number:* EPA–HQ–OAR–2022–0071; NSPS for Rubber Tire Manufacturing (40 CFR part 60, subpart BBB) (Renewal); EPA ICR Number 1158.14; OMB Control Number 2060–0156; Expiration date March 31, 2023.

Respondents: Rubber tire manufacturing facilities.

Respondent's obligation to respond: Mandatory (40 CFR part 60, subpart BBB).

Estimated number of respondents: 41.

Frequency of response: Annually, semiannually.

Estimated annual burden: 17,700 hours.

Estimated annual cost: $2,070,000, includes $16,400 annualized capital or O&M costs.

Changes in estimates: There is no projected change in burden from the previous ICR.

(21) *Docket ID Number:* EPA–HQ–OAR–2022–0083; NESHAP for the Printing and Publishing Industry (40 CFR part 63, subpart KK) (Renewal); EPA ICR Number 1739.10; OMB Control Number 2060–0335; Expiration date March 31, 2023.

Respondents: Printing and publishing facilities.

Respondent's obligation to respond: Mandatory (40 CFR part 63, subpart KK)

Estimated number of respondents: 352.

Frequency of response: Semiannually.

Estimated annual burden: 59,800 hours.

Estimated annual cost: $7,220,000, includes $414,000 annualized capital or O&M costs.

Changes in estimates: There is no projected change in burden from the previous ICR.

(22) *Docket ID Number:* EPA–HQ–OAR–2022–0016; NESHAP for the Portland Cement Manufacturing Industry (40 CFR part 63, subpart LLL) (Renewal); EPA ICR Number 1801.14; OMB Control Number 2060–0416; Expiration date March 31, 2023.

Respondents: Portland cement manufacturing facilities.

Respondent's obligation to respond: Mandatory (40 CFR part 63, subpart LLL).

Estimated number of respondents: 40.

Frequency of response: Initially, annually, semiannually.

Estimated annual burden: 12,200 hours.

Estimated annual cost: $6,100,000, includes $4,730,000 annualized capital or O&M costs.

Changes in estimates: There is no projected change in burden from the previous ICR.

(23) *Docket ID Number:* EPA–HQ–OAR–2022–0030; NESHAP for Hydrochloric Acid Production (40 CFR part 63, subpart NNNNN) (Renewal); EPA ICR Number 2032.12; OMB Control Number 2060–0529; Expiration date March 31, 2023.

Respondents: Hydrochloric acid production facilities.

Respondent's obligation to respond: Mandatory (40 CFR part 63, subpart NNNNN).

Estimated number of respondents: 19.

Frequency of response: Annually, semiannually.

Estimated annual burden: 22,000 hours.

Estimated annual cost: $1,562,000, includes $162,000 annualized capital or O&M costs.

Changes in estimates: There is no projected change in burden from the previous ICR.

(24) *Docket ID Number:* EPA–HQ–OAR–2022–0032; NESHAP for Plastic Parts and Products Surface Coating (40 CFR part 63, subpart PPPP) (Renewal); EPA ICR Number 2044.10; OMB Control Number 2060–0537; Expiration date March 31, 2023.

Respondents: Plastic parts and products surface coating operations.

Respondent's obligation to respond: Mandatory (40 CFR part 63, subpart PPPP).

Estimated number of respondents: 125.

Frequency of response: Semiannually.

Estimated annual burden: 86,400 hours.

Estimated annual cost: $9,910,000, includes $66,900 annualized capital or O&M costs.

Changes in estimates: There is a projected increase in burden due to implementation of regulatory revisions.

(25) *Docket ID Number:* EPA–HQ–OAR–2022–0034; NESHAP for Miscellaneous Metal Parts and Products (40 CFR part 63, subpart MMMM) (Renewal); EPA ICR Number 2056.09; OMB Control Number 2060–0486; Expiration date March 31, 2023.

Respondents: Miscellaneous metal parts and products surface coating operations.

Respondent's obligation to respond: Mandatory (40 CFR part 63, subpart MMMM).

Estimated number of respondents: 390.

Frequency of response: Semiannually.

Estimated annual burden: 179,000 hours.

Estimated annual cost: $20,60,000, includes $240,000 annualized capital or O&M costs.

Changes in estimates: There is a projected decrease in burden due to a decrease in the number of sources subject to the regulation.

(26) *Docket ID Number:* EPA–HQ–OAR–2022–0043; NESHAP for Prepared Feeds Manufacturing (40 CFR part 63, subpart DDDDDDD) (Renewal); EPA ICR Number 2354.06; OMB Control Number 2060–0635; Expiration date March 31, 2023.

Respondents: Animal feed production facilities.

Respondent's obligation to respond: Mandatory (40 CFR part 63, subpart DDDDDDD).

Estimated number of respondents: 1,800.

Frequency of response: Annually, quarterly.

Estimated annual burden: 64,100 hours.

Estimated annual cost: $7,350,000, includes $37,200 annualized capital or O&M costs.

Changes in estimates: There is no projected change in burden from the previous ICR.

(27) *Docket ID Number:* EPA–HQ–OAR–2022–0015; NSPS for Graphic Arts Industry (40 CFR part 60, subpart QQ) (Renewal); EPA ICR Number 0657.14; OMB Control Number 2060–0105; Expiration date July 31, 2023.

Respondents: Rotogravure printing presses for publication.

Respondent's obligation to respond: Mandatory (40 CFR part 60, subpart QQ).

Estimated number of respondents: 22.

Frequency of response: Initially, semiannually.

Estimated annual burden: 2,060 hours.

Estimated annual cost: $238,000, includes no annualized capital or O&M costs.

Changes in estimates: There is a projected increase in burden due to an increase in the number of sources subject to the regulation.

(28) *Docket ID Number:* EPA–HQ–OAR–2022–0052; NSPS for Incinerators (40 CFR part 60, subpart E) (Renewal); EPA ICR Number 1058.14; OMB Control Number 2060–0040; Expiration date July 31, 2023.

Respondents: Solid waste incineration units.

Respondent's obligation to respond: Mandatory (40 CFR part 60, subpart E).

Estimated number of respondents: 82.

Frequency of response: Annually.

Estimated annual burden: 2,070 hours.

Estimated annual cost: $796,000, includes $247,000 annualized capital or O&M costs.

Changes in estimates: There is no projected change in burden from the previous ICR.

(29) *Docket ID Number:* EPA–HQ–OAR–2022–0060; NSPS for Stationary Gas Turbines (40 CFR part 60, subpart GG) (Renewal); EPA ICR Number 1071.14; OMB Control Number 2060–0028; Expiration date July 31, 2023.

Respondents: Stationary gas turbines.

Respondent's obligation to respond: Mandatory (40 CFR part 60, subpart GG).

Estimated number of respondents: 535.

Frequency of response: Semiannually.

Estimated annual burden: 69,100 hours.

Estimated annual cost: $8,000,000, includes no annualized capital or O&M costs.

Changes in estimates: There is no projected change in burden from the previous ICR.

(30) *Docket ID Number:* EPA–HQ–OAR–2022–0068; NSPS for VOC Emissions from Petroleum Refinery Wastewater Systems (40 CFR part 60, subpart QQQ) (Renewal); EPA ICR Number 1136.15; OMB Control Number 2060–0172; Expiration date August 31, 2023.

Respondents: Petroleum refineries with wastewater systems.

Respondent's obligation to respond: Mandatory (40 CFR part 60, Ssubpart QQQ).

Estimated number of respondents: 149.

Frequency of response: Semiannually.

Estimated annual burden: 10,200 hours.

Estimated annual cost: $1,200,000, includes $19,400 annualized capital or O&M costs.

Changes in estimates: There is no projected change in burden from the previous ICR.

(31) *Docket ID Number:* EPA–HQ–OAR–2022–0055; NSPS for Equipment Leaks of VOC in Petroleum Refineries (40 CFR part 60, subparts GGG and GGGa) (Renewal); EPA ICR Number 0983.17; OMB Control Number 2060–0067; Expiration date September 30, 2023.

Respondents: Petroleum refineries.

Respondent's obligation to respond: Mandatory (40 CFR part 60, subparts GGG and GGGa).

Estimated number of respondents: 116.

Frequency of response: Semiannually.

Estimated annual burden: 183,700 hours.

Estimated annual cost: $21,220,000, includes no annualized capital or O&M costs.

Changes in estimates: There is no projected change in burden from the previous ICR.

(32) *Docket ID Number:* EPA–HQ–OAR–2022–0038; NSPS for Stationary Spark Ignition Internal Combustion Engines (40 CFR part 60, subpart JJJJ) (Renewal); EPA ICR Number 2227.07; OMB Control Number 2060–0610; Expiration date September 30, 2023.

Respondents: Facilities with stationary spark ignition internal combustion engines.

Respondent's obligation to respond: Mandatory (40 CFR part 60, subpart JJJJ).

Estimated number of respondents: 19,076.

Frequency of response: Annually.

Estimated annual burden: 36,600 hours.

Estimated annual cost: $6,860,000, includes $2,570,000 annualized capital or O&M costs.

Changes in estimates: There is a projected increase in burden due to an increase in the number of sources subject to the regulation.

(33) *Docket ID Number:* EPA–HQ–OAR–2022–0045; NSPS for Commercial and Industrial Solid Waste Incineration (CISWI) Units (40 CFR part 60, subpart CCCC) (Renewal); EPA ICR Number 2384.06; OMB Control Number 2060–0662; Expiration date September 30, 2023.

Respondents: Commercial and industrial solid waste incineration units.

Respondent's obligation to respond: Mandatory (40 CFR part 60, subpart CCCC) (Renewal).

Estimated number of respondents: 11.

Frequency of response: Annually, semiannually.

Estimated annual burden: 1,700 hours.

Estimated annual cost: $970,000, includes $769,000 annualized capital or O&M costs.

Changes in estimates: There is a projected increase in burden due to an increase in the number of sources subject to the regulation.

(34) *Docket ID Number:* EPA–HQ–OAR–2022–0048; NSPS for Kraft Pulp Mills for which Construction, Reconstruction or Modification Commenced after May 23, 2013 (40 CFR part 60, subpart BB) (Renewal); EPA ICR Number 2485.05; OMB Control Number 2060–0690; Expiration date September 30, 2023.

Respondents: Kraft pulp mills.

Respondent's obligation to respond: Mandatory (40 CFR part 60, subpart BB) (Renewal).

Estimated number of respondents: 12.

Frequency of response: Semiannually.

Estimated annual burden: 5,250 hours.

Estimated annual cost: $1,580,000, includes $976,000 annualized capital or O&M costs.

Changes in estimates: There is a projected increase in burden due to an increase in the number of sources subject to the regulation.

Penny Lassiter,

Director, Sector Policies and Programs Division.

[FR Doc. 2022–15563 Filed 7–21–22; 8:45 am]

BILLING CODE 6560–50–P

ENVIRONMENTAL PROTECTION AGENCY

[EPA–R06–OW–2022–0603; FRL–6179.1–01–R6]

Proposed NPDES General Permit for New and Existing Sources and New Dischargers in the Offshore Subcategory of the Oil and Gas Extraction Category for the Western Portion of the Outer Continental Shelf of the Gulf of Mexico (GMG290000)

AGENCY: Environmental Protection Agency (EPA).

ACTION: Notice of proposed NPDES general permit issuance.

SUMMARY: The Regional Administrator of Region 6 proposes to reissue the National Pollutant Discharge Elimination System (NPDES) General Permit No. GMG290000 for existing and new sources and new dischargers in the Offshore Subcategory of the Oil and Gas Extraction Point Source Category, located in and discharging to the Outer Continental Shelf offshore of Louisiana and Texas. The discharge of produced water to that portion of the Outer Continental Shelf from Offshore Subcategory facilities located in the territorial seas of Louisiana and Texas is also authorized by this permit.

This draft permit proposes to retain, with certain modifications, the limitations and conditions of the existing 2017 issued permit (2017 permit). The 2017 permit limitations conform with the Oil and Gas Offshore Subcategory Guidelines and contain additional requirements to assess impacts from the discharge of produced water to the marine environment, as required by section 403(c) of the Clean Water Act. The Environmental Protection Agency (EPA) intends to use the reissued permit to regulate oil and gas extraction facilities located in the Outer Continental Shelf of the Western Gulf of Mexico, *e.g.,* offshore oil and gas extraction platforms, but other types of facilities may also be subject to the permit. Covered operators would fall primarily under the North American Industrial Classification System (NAICS) 211 and 213 code series (previously the Standard Industrial Classification (SIC) 13 code series). To determine whether your facility, company, business, organization, etc., may be affected by this action, you should carefully examine the applicability criteria in Part I, Section A.1 of the draft permit.

DATES: Comments must be submitted in writing to EPA on or before September 20, 2022.

Proposed Documents: A complete draft permit and a fact sheet fully explaining the proposal are available online via the docket for this action at: *https://www.regulations.gov.* A copy of the proposed permit, fact sheet, and this **Federal Register** Notice may also be found via the EPA Region 6 website at: *https://www3.epa.gov/region6/water/npdes/genpermit/index.htm.*

To obtain hard copies of these documents or any other information in the administrative record, please contact Ms. Evelyn Rosborough using the contact information provided below.

Other Legal Requirements: Other statutory and regulatory requirements are discussed in the fact sheet that include: Oil Spill Requirement; Ocean Discharge Criteria Evaluation; Marine Protection, Research, and Sanctuaries Act; National Environmental Policy Act; Magnuson-Stevens Fisheries Conservation and Management Act; Endangered Species Act; State Water Quality Standards and State Certification; Coastal Zone Management Act; Paperwork Reduction Act; and Regulatory Flexibility Act.

How do I comment on this proposal?

Comment Submittals: You may send comments, identified by Docket ID. No. EPA–R06–OW–2022–0603; by any of the following methods:

- *Federal eRulemaking Portal: https://www.regulations.gov/* (our preferred method).
- *By Email:* Send comments by email to *rosborough.evelyn@epa.gov.* Include Docket ID. No EPA–R06–OW–2022–0603; in the subject line of the email.
- *By Mail/Hand Delivery/Courier:* Deliver comments to U.S. EPA, Attn: Evelyn Rosborough, 1201 Elm Street, Dallas, Texas 75270.
- We encourage the public to submit comments via *www.Regulations.gov* or via email as there may be a delay in processing mail and hand deliveries will be accepted by appointment only due to public health concerns related to COVID–19.
- Please submit your comments within the specified time period cited in the **DATES** section of this document. Comments received after the close of the comment period will be marked ''late''. The EPA is not required to consider these late comments. All comments received by the EPA in accordance with this section by the ending date of the comment period will be considered by the EPA before a final decision is made regarding permit issuance.
- Once submitted, comments cannot be edited or removed from the docket. The EPA may publish any comment received to its public docket.

Do not submit to EPA's docket or email any information you consider to be Confidential Business Information (CBI) or other information whose disclosure is restricted by statute. Multimedia submissions (audio, video, etc.) must be accompanied by a written comment. The written comment is considered the official comment and should include discussion of all points you wish to make. The EPA will generally not consider comments or comment contents located outside of the primary submission (*i.e.,* on the web, cloud, or other file sharing system). For additional submission methods, the full EPA public comment policy, information about CBI or multimedia submissions, and general guidance on making effective comments, please visit *https://www.epa.gov/dockets/commenting-epa-dockets.*

Administrative record: All documents and references used in the development of this permit are part of the Administrative Record for this permit. Although listed in the index, some information is not publicly available, *e.g.,* CBI or other information whose disclosure is restricted by statute. Certain other material, such as copyrighted material, will be publicly available only in hard copy. Publicly available materials are available either electronically or in hard copy from Ms. Evelyn Rosborough at the address above. The Administrative Record may also be viewed at the EPA Region 6 Offices from 8:30 a.m. to 4:30 p.m., Monday through Friday, excluding legal holidays. For more information on scheduling a time to view the Record or to obtain copies of available documents, please contact Ms. Evelyn Rosborough at 214–665–7515 or *rosborough.evelyn@epa.gov.*

Public Meetings and Public Hearings

Public meetings and hearings on the proposed permit will be held during the comment period approximately 30 to 45 days after the date of this notice. Times, places and instructions for virtual participation will be announced online at the EPA Public Notices pages for Texas and Louisiana at *https://www.epa.gov/publicnotices.* The meetings will include a presentation on the proposed permit followed by the opportunity for questions and answers. The public hearings will be held in accordance with the requirements of 40 CFR 124.12. At the public hearing, any person may submit oral or written statements and data concerning the proposed permit. Any person who cannot attend one of the public hearings may still submit written comments, which have the same weight as comments made at the public hearing, through the end of the public comment period.

Authority: Clean Water Act, 33 U.S.C. 1251 *et seq.*

Charles W. Maguire,

Director, Water Division, EPA Region 6.

[FR Doc. 2022–15648 Filed 7–21–22; 8:45 am]

BILLING CODE 6560–50–P

ENVIRONMENTAL PROTECTION AGENCY

[FRL OP–OFA–026]

Environmental Impact Statements; Notice of Availability

Responsible Agency: Office of Federal Activities, General Information 202–564–5632 or *https://www.epa.gov/nepa.*

Weekly receipt of Environmental Impact Statements (EIS)

Filed July 11, 2022 10 a.m. EST Through July 18, 2022 10 a.m. EST

Pursuant to 40 CFR 1506.9.

Notice: Section 309(a) of the Clean Air Act requires that EPA make public its comments on EISs issued by other Federal agencies. EPA's comment letters on EISs are available at: *https://cdxnodengn.epa.gov/cdx-enepa-public/action/eis/search.*

EIS No. 20220100, Final, NRC, NM, Holtec International's License Application for a Consolidated Interim Storage Facility for Spent Nuclear Fuel in Lea County, New Mexico, *Review Period Ends:* 08/22/2022, *Contact:* Jill Caverly 301–415–7674.

EIS No. 20220101, Draft, BLM, NV, Gibellini Vanadium Mine Project, *Comment Period Ends:* 09/06/2022, *Contact:* Scott Distel 775–635–4093.

EIS No. 20220102, Third Final Supplemental, USACE, CA, American River Watershed, California Folsom Dam Raise Project: Updated Designs, *Review Period Ends:* 08/22/2022, *Contact:* Kimberly Watts 916–557–7770.

EIS No. 20220103, Final Supplement, USACE, LA, South Central Coast Louisiana Final Supplemental Integrated Feasibility Study with Environmental Impact Statement, *Review Period Ends:* 08/22/2022, *Contact:* Joe Jordan 309–794–5791.

Dated: July 19, 2022.

Cindy S. Barger,

Director, NEPA Compliance Division, Office of Federal Activities.

[FR Doc. 2022–15701 Filed 7–21–22; 8:45 am]

BILLING CODE 6560–50–P

FEDERAL COMMUNICATIONS COMMISSION

[FR ID 96660]

Deletion of Item From July 14, 2022 Open Meeting

The following item was released by the Commission on July 13, 2022 and deleted from the list of items scheduled for consideration at the Thursday, July 14, 2022, Open Meeting. This item was previously listed in the Commission's Sunshine Notice on Thursday, July 7, 2022.

3	MEDIA	*Title:* Preserving Local Radio Programming (MB Docket No. 03–185). *Summary:* The Commission will consider a Notice of Proposed Rulemaking regarding a proposal to allow certain channel 6 low power television stations to continue to provide FM radio service as ancillary or supplementary service under specified conditions.

* * * * *

The meeting will be webcast with open captioning at: *www.fcc.gov/live.* Open captioning will be provided as well as a text only version on the FCC website. Other reasonable accommodations for people with disabilities are available upon request. In your request, include a description of the accommodation you will need and a way we can contact you if we need more information. Last minute requests will be accepted but may be impossible to fill. Send an email to: *fcc504@fcc.gov* or call the Consumer & Governmental Affairs Bureau at 202–418–0530. Additional information concerning this meeting may be obtained from the Office of Media Relations, (202) 418–0500. Audio/Video coverage of the meeting will be broadcast live with open captioning over the internet from the FCC Live web page at *www.fcc.gov/live.*

Federal Communications Commission.

Dated: July 13, 2022.

Marlene Dortch,

Secretary.

[FR Doc. 2022–15636 Filed 7–21–22; 8:45 am]

BILLING CODE 6712–01–P

FEDERAL COMMUNICATIONS COMMISSION

[OMB 3060–1222; FR ID 96879]

Information Collection Being Submitted for Review and Approval to Office of Management and Budget

AGENCY: Federal Communications Commission.

ACTION: Notice and request for comments.

SUMMARY: As part of its continuing effort to reduce paperwork burdens, as required by the Paperwork Reduction Act (PRA) of 1995, the Federal Communications Commission (FCC or the Commission) invites the general public and other Federal Agencies to take this opportunity to comment on the following information collection. Pursuant to the Small Business Paperwork Relief Act of 2002, the FCC seeks specific comment on how it might ''further reduce the information collection burden for small business concerns with fewer than 25 employees.'' The Commission may not conduct or sponsor a collection of information unless it displays a currently valid Office of Management and Budget (OMB) control number. No person shall be subject to any penalty for failing to comply with a collection of information subject to the PRA that does not display a valid OMB control number.

DATES: Written comments and recommendations for the proposed information collection should be submitted on or before August 22, 2022.

ADDRESSES: Comments should be sent to *www.reginfo.gov/public/do/PRAMain.* Find this particular information collection by selecting ''Currently under 30-day Review—Open for Public Comments'' or by using the search function. Your comment must be submitted into *www.reginfo.gov* per the above instructions for it to be considered. In addition to submitting in *www.reginfo.gov* also send a copy of your comment on the proposed information collection to Nicole Ongele, FCC, via email to *PRA@fcc.gov* and to *Nicole.Ongele@fcc.gov.* Include in the comments the OMB control number as shown in the **SUPPLEMENTARY INFORMATION** below.

FOR FURTHER INFORMATION CONTACT: For additional information or copies of the information collection, contact Nicole Ongele at (202) 418–2991. To view a copy of this information collection request (ICR) submitted to OMB: (1) go to the web page *http://www.reginfo.gov/public/do/PRAMain,* (2) look for the section of the web page called ''Currently Under Review,'' (3) click on the downward-pointing arrow in the ''Select Agency'' box below the ''Currently Under Review'' heading, (4) select ''Federal Communications Commission'' from the list of agencies presented in the ''Select Agency'' box, (5) click the ''Submit'' button to the right of the ''Select Agency'' box, (6) when the list of FCC ICRs currently under review appears, look for the Title of this ICR and then click on the ICR Reference Number. A copy of the FCC submission to OMB will be displayed.

SUPPLEMENTARY INFORMATION: As part of its continuing effort to reduce paperwork burdens, as required by the Paperwork Reduction Act (PRA) of 1995 (44 U.S.C. 3501–3520), the FCC invited the general public and other Federal Agencies to take this opportunity to comment on the following information collection. Comments are requested concerning: (a) Whether the proposed collection of information is necessary for the proper performance of the functions of the Commission, including whether the information shall have practical utility; (b) the accuracy of the Commission's burden estimates; (c) ways to enhance the quality, utility, and clarity of the information collected; and (d) ways to minimize the burden of the collection of information on the respondents, including the use of automated collection techniques or other forms of information technology. Pursuant to the Small Business Paperwork Relief Act of 2002, Public Law 107–198, see 44 U.S.C. 3506(c)(4), the FCC seeks specific comment on how it might ''further reduce the information collection burden for small business concerns with fewer than 25 employees.''

OMB Control Number: 3060–1222.

Title: Inmate Calling Services (ICS) Provider Annual Reporting, Certification, Consumer Disclosure, and Waiver Request Requirements.

Form Number(s): FCC Form 2301(a) and FCC Form 2301(b).

Type of Review: Revision of a currently approved collection.

Respondents: Business or other for-profit.

Number of Respondents and Responses: 20 respondents; 23 responses.

Estimated Time per Response: 5 hours–120 hours.

Frequency of Response: Annual reporting and certification requirements, third party disclosure and waiver request requirements.

Obligation to Respond: Required to obtain or retain benefits. Statutory authority for this collection of information is contained in sections 1, 4(i)–4(j), 201(b), 218, 220, 225, 255, 276, 403, and 617 of the Communications Act of 1934, as amended, 47 U.S.C. 151, 154(i)–(j), 201(b), 218, 220, 225, 255, 276, 403 and 617.

Total Annual Burden: 3,740 hours.

Total Annual Cost: No cost.

Privacy Act Impact Assessment: No impact(s).

Nature and Extent of Confidentiality: The Protective Order in the Commission's inmate calling services (ICS) proceeding, WC Docket 12–375, 28 FCC Rcd 16954 (WCB 2013), provides confidential treatment for the proprietary information submitted by (ICS providers in response to the Commission's directives. The Commission will treat as presumptively confidential any particular information identified as confidential by the provider in accordance with the Freedom of Information Act and Commission rules. Each confidential document should be stamped and submitted to the Secretary's Office with an accompanying cover letter, as specified by the Protective Order.

Needs and Uses: Section 201 of the Communications Act of 1934, as amended (Act), 47 U.S.C 201, requires that ICS providers' interstate and international rates and practices be just and reasonable. Section 276 of the Act, 47 U.S.C. 276, requires that payphone service providers (including ICS providers), be fairly compensated for completed calls.

In 2015, the Commission released the Second Report and Order and Third Notice of Further Proposed Rulemaking, WC Docket No. 12–375, 30 FCC Rcd 12763, (*2015 ICS Order*), in which the Commission required that ICS providers file Annual Reports providing data and other information on their ICS operations, as well as Annual Certifications that reported data are complete and accurate and comply with the Commission's ICS rules. Pursuant to the authority delegated it by the Commission in the *2015 ICS Order,* the Wireline Competition Bureau (Bureau) created a standardized reporting template (FCC Form No. 2301(a)) and a related certification of accuracy (FCC Form No. 2301(b)), as well as instructions to guide providers through the reporting process. The instructions explain the reporting and certification requirements and reduce the burden of the data collection. (ICS Annual Reporting Form (2017–2019I, *https://www.fcc.gov/general/ics-data-collections;* ICS Annual Reporting Certification Form, *https://www.fcc.gov/general/ics-data-collections*).

In 2021, the Commission released the Third Report and Order, Order on Reconsideration, and Fifth Further Notice of Proposed Rulemaking (*2021 ICS Order*), WC Docket No. 12–375, 36 FCC Rcd (2021), in which the Commission continued its reform of the ICS marketplace. The Commission revised its rules by adopting, among other things, lower interim rate caps for interstate calls, new interim rate caps for international calls, and a new rate cap structure that requires ICS providers to differentiate between legally mandated and contractually required site commissions.

The 2021 rules necessitated further changes to the instructions and annual reporting and certification templates in order to simplify compliance with a reduce the burden of this data collection. On December 15, 2021, the Wireline Competition Bureau (Bureau) issued a Public Notice, WC 12–375, DA 21–1583 (WCB Dec. 15, 2021), seeking comment on its proposed revisions to the instructions and template for the Annual Reports and Certifications submitted by ICS providers. After considering the comments and replies submitted in response to the Public Notice, the Bureau released an Order on June 24, 2022 revising the instructions, reporting template, and certification form for the annual reports submitted by ICS providers. The reporting template consists of a Word document (Word template) and Excel spreadsheets (Excel template). *See* Annual Reports Adoption Order (DA 22–676, WC Docket No. 12–375 (WCB June 24, 2022), available at *https://www.fcc.gov/document/wcb-announces-ics-annual-reporting-and-certification-revisions.* The Order largely adopted the proposals contained in the Public Notice, with certain minor refinements and reevaluations responsive to comments and replies filed in response to the Public Notice.

Under the Bureau's Order, ICS providers must continue to submit all reports using the electronic template provided by the Commission, and to provide the data in a machine-readable, manipulatable format. The reporting requirements cover the general categories proposed in the Public Notice. These categories include the submission of information on facilities served; interstate, intrastate, and international ICS rates; ancillary service charges; site commissions; and disability access, among other matters. The Bureau adopted reporting requirements for interstate, international, and intrastate ICS rates as proposed, with minor revisions. Further, the Bureau adopted the reporting requirements for ancillary service charges assessed by ICS providers as proposed, with certain revisions. In addition, the Bureau adopted the reporting requirements as proposed concerning site commissions, with minor revisions. The Bureau also revised the instructions and reporting template to match these revisions, and to more precisely target the information to be reported in connection with providers' disability access services. The revised Word and Excel templates (collectively, FCC Form 2301(a)) and certification form (FCC Form 2301(b)) will be submitted for approval by the Office of Management and Budget.

Federal Communications Commission.

Marlene Dortch,

Secretary, Office of the Secretary.

[FR Doc. 2022–15637 Filed 7–21–22; 8:45 am]

BILLING CODE 6712–01–P

FEDERAL DEPOSIT INSURANCE CORPORATION

[OMB No. 3064–0046; –0118; –00191]

Agency Information Collection Activities: Proposed Collection Renewal; Comment Request

AGENCY: Federal Deposit Insurance Corporation (FDIC).

ACTION: Notice and request for comment.

SUMMARY: The FDIC, as part of its obligations under the Paperwork Reduction Act of 1995 (PRA), invites the general public and other Federal agencies to take this opportunity to comment on the renewal of the existing information collections described below (OMB Control No. 3064–0046, –0118 and –0191).

DATES: Comments must be submitted on or before September 20, 2022.

ADDRESSES: Interested parties are invited to submit written comments to the FDIC by any of the following methods:

- *Agency website: https://www.fdic.gov/resources/regulations/federal-register-publications/.*

• *Email: comments@fdic.gov.* Include the name and number of the collection in the subject line of the message.

• *Mail:* Manny Cabeza (202–898–3767), Regulatory Counsel, MB–3128, Federal Deposit Insurance Corporation, 550 17th Street NW, Washington, DC 20429.

• *Hand Delivery:* Comments may be hand-delivered to the guard station at the rear of the 17th Street NW building (located on F Street NW), on business days between 7:00 a.m. and 5:00 p.m.

All comments should refer to the relevant OMB control number. A copy of the comments may also be submitted to the OMB desk officer for the FDIC: Office of Information and Regulatory Affairs, Office of Management and Budget, New Executive Office Building, Washington, DC 20503.

FOR FURTHER INFORMATION CONTACT: Manny Cabeza, Regulatory Counsel, 202–898–3767, *mcabeza@fdic.gov,* MB–3128, Federal Deposit Insurance Corporation, 550 17th Street NW, Washington, DC 20429.

SUPPLEMENTARY INFORMATION:

Proposal to renew the following currently approved collection of information:

1. *Title:* Home Mortgage Disclosure (HMDA).

OMB Number: 3064–0046.

Form Number: None.

Affected Public: Insured state nonmember banks.

Burden Estimate:

SUMMARY OF ANNUAL BURDEN AND INTERNAL COST [OMB 3064–0046]

Burden Calculation [OMB No. 3064–0046]

Item	IC description (section)	Type of burden (frequency of response)	Obligation to respond	Estimated annual number of respondents	Estimated annual number of responses per respondent	Estimated time per response (hours)	Total annual estimated burden hours
1	Full Data—HMDA (12 CFR Part 1003.4)	Reporting (Annual).	Mandatory	350	2,434.66	0.583	496,792
2	Partial Data—HMDA (12 CFR Part 1003.4)	Reporting (Annual).	Mandatory	760	330.1	0.333	83,542
3	Retain copy of LAR for at least three years (12 CFR Part 1003.5(a)(1)(i)).	Record-keeping (Annual).	Mandatory	1,110	1	0.5	555
4	Make the written notices required under 1003.5(2)(b) and 1003.5(c)(1) available for five and three years, respectively (12 CFR Part 1003.5(d)(1)).	Record-keeping (Annual).	Mandatory	1,110	2	0.167	371
5	Record LAR data within 30 days after the end of the calendar quarter in which final action is taken (New reporters) (12 CFR Part 1003.4(f)).	Record-keeping (One time).	Mandatory	15	1	12	180
6	Record LAR data within 30 days after the end of the calendar quarter in which final action is taken (Existing reporters) (12 CFR Part 1003.4(f)).	Record-keeping (Quarterly).	Mandatory	1,110	4	1.5	6,660
7	Provide written notice upon request that the FFIEC disclosure statement is available on the CFPB's website (12 CFR Part 1003.5(b)(2)).	Third-party Disclosure (Annual).	Mandatory	1,110	1	0.5	555
8	Provide written notice upon request that the institution's modified LAR is available on the CFPB's website (12 CFR Part 1003.5(c)(1)).	Third-party Disclosure (On Occasion).	Mandatory	1,110	1	0.5	555
9	Make the FFIEC disclosure statement and/or modified LAR available to the public directly through the institution (12 CFR Part 1003.5(d)(2)).	Third-party Disclosure (On Occasion).	Optional	55	1	1	55
10	General notice of availability of HMDA data in lobby of home office and each office located in a MSA (12 CFR Part 1003.5(e)).	Third-party Disclosure (One time).	Mandatory	15	1	1	15
Total Estimated Annual Burden Hours:							589,280

General Description of Collection: The Board of Governors of the Federal Reserve System (the Board) promulgated Regulation C, 12 CFR part 203, to implement the Home Mortgage Disclosure Act (HMDA), 12 U.S.C. 2801–2810. Regulation C requires depository institutions that meet its asset-size threshold to maintain data about home loan applications (the type of loan requested, the purpose of the loan, whether the loan was approved, and the type of purchaser if the loan was later sold), to update the information quarterly, and to report the information annually. Pursuant to Regulation C, insured state-nonmember banks supervised by the FDIC with assets over a certain dollar threshold must collect, record, and report data about home loan applications. The FDIC is revising this information collection to align the burden estimates with the Board, the Office of the Comptroller of the Currency and the Consumer Financial Protection Bureau. In doing so, the FDIC has added eight line items to its information collection and has revised the estimated time per response for certain items for consistency across all agencies. This has resulted in an increase of approximately 500,000 hours in the total estimated annual burden.

2. *Title:* Management Official Interlocks.

OMB Number: 3064–0118.

Form Number: None.

Affected Public: Insured state nonmember banks and state savings associations.

Burden Estimate:

SUMMARY OF ESTIMATED ANNUAL BURDEN
[OMB No. 3064–0118]

Information collection description	Type of burden (obligation to respond)	Frequency of response	Number of respondents	Number of responses per respondent	Hours per response	Annual burden (hours)
Management Official Interlocks	Reporting (Mandatory).	On Occasion	1	1	4	4
Management Official Interlocks	Recordkeeping (Mandatory).	On Occasion	1	1	3	3
Estimated Total Annual Burden						7

Source: FDIC.

General Description of Collection: The FDIC's Management Official Interlocks regulation, 12 CFR 348, which implements the Depository Institutions Management Interlocks Act (DIMIA), 12 U.S.C. 3201–3208, generally prohibits bank management officials from serving simultaneously with two unaffiliated depository institutions or their holding companies but allows the FDIC to grant exemptions in appropriate circumstances. Consistent with DIMIA, the FDIC's Management Official Interlocks regulation has an application requirement requiring information specified in the FDIC's procedural regulation. The rule also contains a notification requirement. There is no change in the method or substance of the collection. The overall reduction in burden hours is a result of economic. In particular, the number of respondents has decreased while the hours per response and occupational distribution have remained the same.

3. *Title:* Interagency Guidance on Leveraged Lending

OMB Number: 3064–0191.

Form Number: None.

Affected Public: Insured state nonmember banks and savings associations.

Burden Estimate:

SUMMARY OF ESTIMATED ANNUAL BURDEN
[OMB No. 3064–0191]

Information collection (IC) description	Type of burden (obligation to respond)	Frequency of response	Estimated number of respondents	Estimated frequency of responses	Estimated time per response (hours)	Total estimated annual burden (hours)
Interagency Guidance on Leveraged Lending—Implementation.	Recordkeeping (Voluntary).	On Occasion	1	1	987	987
Interagency Guidance on Leveraged Lending—Ongoing	Recordkeeping (Voluntary).	On Occasion	4	0.25	529	529
Estimated Total Annual Burden						1,516

Source: FDIC.

General Description of Collection: The Interagency Guidance on Leveraged Lending (Guidance) outlines for agency supervised institutions high level principles related to safe-and sound leveraged lending activities, including underwriting considerations, assessing and documenting enterprise value, risk management expectations for credits awaiting distribution, stress testing expectations, pipeline portfolio management, and risk management expectations for exposures held by the institution. There is no change in the method or substance of the collection. The overall reduction in burden hours is the result of economic fluctuation. In particular, the number of respondents and frequency of responses have decreased.

Request for Comment

Comments are invited on: (a) Whether the collection of information is necessary for the proper performance of the FDIC's functions, including whether the information has practical utility; (b) the accuracy of the estimates of the burden of the information collection, including the validity of the methodology and assumptions used; (c) ways to enhance the quality, utility, and clarity of the information to be collected; and (d) ways to minimize the burden of the collection of information on respondents, including through the use of automated collection techniques or other forms of information technology. All comments will become a matter of public record.

Federal Deposit Insurance Corporation.

Dated at Washington, DC, on July 18, 2022.

James P. Sheesley,

Assistant Executive Secretary.

[FR Doc. 2022–15663 Filed 7–21–22; 8:45 am]

BILLING CODE 6714–01–P

FEDERAL ELECTION COMMISSION

Sunshine Act Meetings

TIME AND DATE: Thursday, July 28, 2022, at 10:00 a.m.

PLACE: *Hybrid meeting:* 1050 First Street NE, Washington, DC (12TH Floor) and virtual.

Note: For those attending the meeting in person, current Covid-19 safety protocols for visitors, which are based on the CDC Covid-19 community level in Washington, DC, will be updated on the commission's contact page by the Monday before the meeting. See the contact page at *https://www.fec.gov/contact/.* If you would like to virtually access the meeting, see the instructions below.

STATUS: This meeting will be open to the public, subject to the above-referenced guidance regarding the Covid-19 community level and corresponding health and safety procedures. To access the meeting virtually, go to the commission's website *www.fec.gov* and click on the banner to be taken to the meeting page.

MATTERS TO BE CONSIDERED:

Draft Advisory Opinion 2022–06: Hispanic Leadership Trust

Draft Advisory Opinion 2022–10: Sprinkle

Resubmission—Audit Division Recommendation Memorandum on

the Kentucky State Democratic Central Executive Committee (A19–13)
Resubmission—Audit Division Recommendation Memorandum on the Democratic Party of Arkansas (A19–15)
Proposed Final Audit Report on the Association for Emergency Responders and Firefighters, PAC (A19–21)
Proposed Final Audit Report on the US Veterans Assistance Foundation, PAC (A19–06)
Management and Administrative Matters

CONTACT PERSON FOR MORE INFORMATION: Judith Ingram, Press Officer. Telephone: (202) 694–1220.

Authority: Government in the Sunshine Act, 5 U.S.C. 552b.

Individuals who plan to attend in person and who require special assistance, such as sign language interpretation or other reasonable accommodations, should contact Laura E. Sinram, Acting Secretary and Clerk, at (202) 694–1040, at least 72 hours prior to the meeting date.

Vicktoria J. Allen,

Acting Deputy Secretary of the Commission.

[FR Doc. 2022–15886 Filed 7–20–22; 4:15 pm]

BILLING CODE 6715–01–P

FEDERAL MEDIATION AND CONCILIATION SERVICE

Privacy Act of 1974; System of Records

AGENCY: Federal Mediation and Conciliation Service

ACTION: Notice of a new system of records.

SUMMARY: Federal Mediation and Conciliation Service (FMCS) Center for Conflict Resolution Education (CCRE) and the Division of Agency Initiatives (DAI) use this system to process conference attendee and participant registration. FMCS hosts, co-hosts, sponsors, or co-sponsors conferences designed to meet the real-world challenges of labor management relations, conflict resolution, mediation, and arbitration. FMCS uses additional vendors to register attendees and participants and to promote conferences. FMCS uses GovDelivery Communications Cloud to promote events and Cvent Event Solutions (Cvent) to register attendees and participants for conferences.

DATES: This system of records will be effective without further notice on August 22, 2022 unless otherwise revised pursuant to comments received. Comments must be received on or before August 22, 2022.

ADDRESSES: You may send comments, identified by FMCS–00012, by any of the following methods:

- *Mail:* FMCS, 250 E Street SW, Washington, DC 20427.
- *Email: privacy@fmcs.gov.* Include FMCS–00012 on the subject line of the message.

FOR FURTHER INFORMATION CONTACT: Kimberly Warren, Digital Media Strategist, at *kwarren@fmcs.gov* or call 202–606–5364. NLMC questions, email address is *nlmcinfo@fmcs.gov.*

SUPPLEMENTARY INFORMATION: To further promote the use of mediation, conflict resolution, and labor relations management in accordance with FMCS's mission, FMCS sponsors and co-sponsors conferences. These conferences educate and train members of the public and private sectors. GovDelivery is a web-based email subscription management application, provided by Granicus, that allows members of the public to subscribe to get information from the FMCS via email. Subscribers can choose from numerous subscriptions offered by FMCS, including, but not limited to, press releases, training opportunities, and event-related notifications. Attendees and participants may subscribe via a secure web page, to receive FMCS emails through a signup page on *fmcs.gov.*

Cvent, an on-line registration system, can handle conference registration and speaker information and allow attendees to register online for any FMCS events. Major functions of this system include RSVP/Decline status, schedule setting, and outgoing messages from FMCS to attendees.

SYSTEM NAME AND NUMBER:

FMCS Conference System—FMCS–00012.

SYSTEM LOCATION:

FMCS, 250 E Street SW, Washington, DC 20427.

SYSTEM MANAGER(S):

Greg Raelson, Director of Congressional and Public Affairs, email *graelson@fmcs.gov,* call 202–606–8081 or send mail to FMCS, 250 E Street SW, Washington, DC 20427, Attn: Greg Raelson. Cvent, Kimberly Warren, Digital Media Strategist, email *kwarren@fmcs.gov,* call 202–606–5364, or send mail to FMCS, 250 E Street SW, Washington, DC 20427, Attn: Kimberly Warren. GovDelivery, call 800–314–0147 or contact support at *https://support.granicus.com/s/contactsupport.*

AUTHORITY FOR MAINTENANCE OF THE SYSTEM:

29 U.S.C. 172; 29 U.S.C. 173 (e); and 29 CFR 1403.

PURPOSE(S) OF THE SYSTEM:

The purpose of the system is for collecting, processing, and maintaining participant's or attendee's basic contact information for FMCS conferences. The basic information is required to determine the participant's or attendee's region or geographical location and to have adequate preparation for the conference. This information is also used to assess the best allocation of FMCS resources. The system gives a detailed structure of the conference including the conference program, keynote sessions, list of invited speakers with their background information, timetables for the conference meetings, venues of the conference, conference sponsors, and conference fees. The system is made up of interrelated components to perform to task, for example a computer system and IT system (multiple computers joined by a network). The system also includes GovDelivery which handles digital subscription management and deliver opt-in email and other messaging to FMCS audiences. Audiences include, but are not limited to, citizens who are interested in receiving news and updates from the FMCS, seek to register for FMCS events and conferences, and who opt to receive targeted communications or specific topics related to conflict management. Cvent is also a component of the FMCS Conference system.

CATEGORIES OF INDIVIDUALS COVERED BY THE SYSTEM:

The categories of individuals in this system include: the public (as attendees or participants), conference speakers, and Federal employees who register on the FMCS website for participation in selected training workshops, webinars, training sessions, and conference sessions hosted by FMCS.

CATEGORIES OF RECORDS IN THE SYSTEM:

The categories of records maintained in the system include:

(1) List of conference programs, including event location, time, date, conference events and agendas;

(2) Information pertaining to registration including names, registration fees, conference description, and professional affiliation;

(3) Attendee's information or participant information including first name, last name, email address, title, office, employer/organization, address, room #/mail code, city, state, zip/postal code, country, and telephone and fax number; and

(4) Information concerning the basis for and supporting documentation regarding the conference.

RECORD SOURCE CATEGORIES:

The information pertaining to this system is primarily collected via website from individuals requesting to register for an event sponsored by FMCS. The sources of information include attendees, speakers, exhibitors, officials, education professionals, FMCS employees, and guests.

ROUTINE USES OF RECORDS MAINTAINED IN THE SYSTEM, INCLUDING CATEGORIES OF USERS AND PURPOSES OF SUCH USES:

In addition to those disclosures generally permitted under 5 U.S.C. 552a(b) of the Privacy Act, all or a portion of the records or information contained in this system may be disclosed to authorized entities, as is determined to be relevant and necessary, outside the FMCS as a routine use pursuant to 5 U.S.C. 552a(b)(3) as follows:

(a) To disclose pertinent information to the appropriate Federal, State, or local agency responsible for investigating, prosecuting, enforcing, or implementing a statute, rule regulation or order where the record, either alone or in conjunction with other information creates an indication of a violation or potential violation of civil or criminal laws or regulations.

(b) To disclose information to the National Archives and Records Administration (NARA) for use in its records management inspections; to the Government Accountability Office (GAO) for oversight purposes; to the Department of Justice (DOJ) to obtain that department's advice regarding disclosure obligations under the Freedom of Information Act (FOIA); or to the Office of Management and Budget (OMB) to obtain that office's advice regarding obligations under the Privacy Act.

(c) To disclose information to the National Archives and Records Administration (NARA) or the General Services Administration in records management inspections conducted under authority of 44 U.S.C. 2904 and 2906.

(d) To a former employee of the Agency for purposes of responding to an official inquiry by a federal, state, or local government entity or professional licensing authority, in accordance with applicable Agency regulations; or facilitating communications with a former employee that may be necessary for personnel-related or other official purposes where the Agency requires information and/or consultation assistance from the former employee regarding a matter within that person's former area of responsibility.

(e) To disclose information to contractors, grantees, experts, consultants, detailees, and other non-Government employees performing or working on a contract, service, or other assignment for the Federal Government when necessary to accompany an agency function related to this system of records.

(f) To officials of labor organizations recognized under 5 U.S.C. Chapter 71 upon receipt of a formal request and in accordance with the conditions of 5 U.S.C. 7114 when relevant and necessary to their duties of exclusive representation concerning personnel policies, practices, and matters affecting working conditions.

(g) To disclose information to a Member of Congress or a congressional office in response to an inquiry made on behalf of, and at the request of, an individual who is the subject of the record.

(h) In an appropriate proceeding before a court, grand jury, or administrative or adjudicative body or official, when FMCS or other Agency representing FMCS determines the records are relevant and necessary to the proceeding; or in an appropriate proceeding before an administrative or adjudicative body when the adjudicator determines the records to be relevant to the proceeding.

(i) To the Department of Justice, including Offices of the U.S. Attorneys; another Federal agency conducting litigation or in proceedings before any court, adjudicative, or administrative body; another party in litigation before a court, adjudicative, or administrative body; or to a court, adjudicative, or administrative body. Such disclosure is permitted only when it is relevant and necessary to the litigation or proceeding, and one of the following is a party to the litigation or has an interest in such litigation:

(1) FMCS, or any component thereof;

(2) Any employee or former employee of FMCS in their official capacity;

(3) Any employee or former employee of FMCS in their capacity where the Department of Justice or FMCS has agreed to represent the employee;

(4) The United States, a Federal agency, or another party in litigation before a court, adjudicative, or administrative body, upon the FMCS General Counsel's approval, pursuant to 5 CFR part 295 or otherwise.

(j) To any federal agency, organization, or person for the purposes of performing audit or oversight operations related to the operation of this system of records as authorized by law, but only information necessary and relevant to such audit or oversight function.

(k) To disclose information to appropriate agencies, entities, and persons when: (1) FMCS suspects or has confirmed that there has been a breach of the system of records; (2) FMCS has determined that as a result of the suspected or confirmed breach there is a risk of harm to individuals, FMCS (including its information systems, programs, and operations), the Federal Government, or national security; and (3) the disclosure made to such agencies, entities, and persons is reasonably necessary to assist in connection with FMCS's efforts to respond to the suspected or confirmed breach or to prevent, minimize, or remedy such harm.

(l) To disclose information to another Federal agency or Federal entity, when FMCS determines that information from this system of records is reasonably necessary to assist the recipient agency or entity in (1) responding to a suspected or confirmed breach or (2) preventing, minimizing, or remedying the risk of harm to individuals, the recipient agency or entity (including its information systems, programs, and operations), the Federal Government, or national security, resulting from a suspected or confirmed breach.

(m) To disclose to professional affiliations, licensing entities, and employers to verify attendance and course completion.

(n) To disclose, in a limited capacity, to vendor(s) to provide requested accommodations associated with conference attendance or participation.

POLICIES AND PRACTICES FOR STORAGE OF RECORDS:

These records are maintained in electronic form only accessible to authorized personnel. Electronic records are stored on the agency's internal servers with restricted access to only authorized personnel and designated officials as determined by agency officials. Cvent and GovDelivery are hosted subscription systems, and all records are maintained by the hosting company.

POLICIES AND PRACTICES FOR RETRIEVAL OF RECORDS:

The records are retrieved by the name or other programming identifier assigned to an individual in the electronic database system. Records may also be retrieved by the title of the conference and entity associated with the attendee's or participant's registration.

POLICIES AND PRACTICES FOR RETENTION OF DISPOSAL OF RECORDS:

All records are retained and disposed of in accordance with General Records Schedule 6.4, issued by the National Archives and Records Administration, and FMCS. Records are destroyed when three years old or when they are no longer needed for business use.

ADMINISTRATIVE, TECHNICAL, AND PHYSICAL SAFEGUARDS:

Regarding the Conference system, on premises there is a NetApp Network attached Windows File System shared folder with permissions set to only allow those with designated access by membership thru a Windows Azure group membership. Group access and modification is controlled by IT which uses a privileged administrator account. Array is physically located in a locked computer room with limited badge access. Cvent and GovDelivery are remote hosted subscription systems accessed by username/password maintained by the host company and created by the user of the systems. FMCS administrators maintain accounts/access and content for the hosted spaces. Cvent and GovDelivery are both FedRAMP authorized vendors and use government accepted procedures for keeping data safe.

RECORD ACCESS PROCEDURES:

Attendees and participants may access the GovDelivery system via links placed on client web pages or in system-generated emails. GovDelivery subscribers have access to their own personal data in the system. Cvent registrants may access their personal data through their registration confirmation or by contacting FMCS. Individuals must provide the following information for their records to be located and identified: (1) Full name, (2) Address, and (3) A reasonably identifying description of the record content requested. Requests can be submitted via *fmcs.gov/foia/,* via email to *privacy@fmcs.gov,* or via mail to FMCS, Privacy Office, 250 E Street SW, Washington, DC 20427. See 29 CFR 1410.3, Individual access requests.

CONTESTING RECORDS PROCEDURES:

See 29 CFR 1410.6, Requests for correction or amendment of records, on how to contest the content of any records. Privacy Act requests to amend or correct records may be submitted to the Privacy Office at *privacy@fmcs.gov* or Privacy Officer at FMCS, Privacy Office, 250 E Street SW, Washington, DC 20427. Also, see *https://www.fmcs.gov/privacy-policy/.*

NOTIFICATION PROCEDURES:

See 29 CFR 1410.3(a), Individual access requests.

EXEMPTIONS PROMULGATED FOR THE SYSTEM:

None.

HISTORY:

None.

Dated: July 19, 2022.

Anna Davis,

Deputy General Counsel.

[FR Doc. 2022–15675 Filed 7–21–22; 8:45 am]

BILLING CODE 6732–01–P

OFFICE OF GOVERNMENT ETHICS

Agency Information Collection Activities; Proposed Collection; Comment Request for Modified Qualified Trust Model Certificates and Model Trust Documents

AGENCY: Office of Government Ethics (OGE).

ACTION: Notice of request for agency and public comments.

SUMMARY: After this first round notice and public comment period, the U.S. Office of Government Ethics (OGE) intends to submit modified versions of the 12 OGE model certificates and model documents for qualified trusts to the Office of Management and Budget (OMB) for review and approval under the Paperwork Reduction Act of 1995.

DATES: Written comments by the public and the agencies on this proposed extension are invited and must be received on or before September 20, 2022.

ADDRESSES: Comments may be submitted to OGE by any of the following methods:

Email: usoge@oge.gov (Include reference to ''OGE qualified trust model certificates and model trust documents paperwork comment'' in the subject line of the message.)

Mail, Hand Delivery/Courier: Office of Government Ethics, 1201 New York Avenue NW, Suite 500, Attention: Jennifer Matis, Associate Counsel, Washington, DC 20005–3917.

Instructions: Comments may be posted on OGE's website, *www.oge.gov.* Sensitive personal information, such as account numbers or Social Security numbers, should not be included. Comments generally will not be edited to remove any identifying or contact information.

FOR FURTHER INFORMATION CONTACT: Jennifer Matis at the U.S. Office of Government Ethics; telephone: 202–482–9216; TTY: 800–877–8339; Email: *jmatis@oge.gov.* Copies of the model documents as currently approved are available on OGE's website, *www.oge.gov.* Electronic copies of these documents may also be obtained, without charge, by contacting Ms. Matis.

SUPPLEMENTARY INFORMATION:

Title: Executive Branch Qualified Trust Documents.

OMB Control Number: 3209–0007.

Type of Information Collection: Revision of a currently approved collection.

Type of Review Request: Regular.

Respondents: Any current or prospective executive branch officials who seek to establish or have established a qualified blind or diversified trust under the Ethics in Government Act of 1978 as a means to avoid conflicts of interest while in office.

Estimated Average Annual Number of Respondents: 2.

Total Estimated Time per Response: 20 minutes to 100 hours (see table below for detailed explanation).

Estimated Average Total Annual Burden: 120 hours.

Abstract: OGE is the supervising ethics office for the executive branch of the Federal Government under the Ethics in Government Act of 1978 (EIGA). Accordingly, OGE administers the qualified trust program for the executive branch. Presidential nominees to executive branch positions subject to Senate confirmation and any other executive branch officials may seek OGE approval for EIGA-qualified blind or diversified trusts as one means to avoid conflicts of interest. The requirements for EIGA-qualified blind and diversified trusts are set forth in section 102(f) of the Ethics in Government Act, 5 U.S.C. app. § 102(f), and OGE's implementing financial disclosure regulations at subpart D of 5 CFR part 2634.

In order to ensure that all applicable requirements are met, OGE is the sponsoring agency for 12 model certificates and model trust documents for qualified blind and diversified trusts. See 5 CFR 2634.402(e)(3), 2634.402(f)(3), 2634.404(e) through (g), 2634.405(d)(2), 2634.407(a); 2634.408(b)(1) through (3), 2634.408(d)(4), 2634.409, and 2634.414. The various model certificates and model trust documents are used by settlors, trustees, and other fiduciaries in establishing and administering these qualified trusts. OGE plans to submit these model certificates and model trust documents (described in detail in the table below) to OMB for renewed approval pursuant to the Paperwork Reduction Act of 1995, 44 U.S.C. chapter 35.

The 12 model documents, along with their burden estimates, are as follows:

Model qualified trust documents	Estimated burden
(A) Blind Trust Communications (Expedited Procedure for Securing Approval of Proposed Communications)	20 minutes per communication.
(B) Model Qualified Blind Trust Provisions	100 hours per model.
(C) Model Qualified Diversified Trust Provisions	100 hours per model.
(D) Model Qualified Diversified Trust Provisions (For Use in the Case of Multiple Fiduciaries)	100 hours per model.
(E) Model Qualified Blind Trust Provisions (For Use in the Case of an Irrevocable Pre-Existing Trust)	100 hours per model.
(F) Hybrid Version of the Model Qualified Diversified Trust Provisions	100 hours per model.
(G) Model Qualified Blind Trust Provisions (For Use in the Case of Multiple Fiduciaries)	100 hours per model.
(H) Model Qualified Diversified Trust Provisions (For Use in the Case of an Irrevocable Pre-Existing Trust)	100 hours per model.
(I) Model Confidentiality Agreement Provisions (For Use in the Case of a Privately Owned Business)	2 hours per agreement.
(J) Model Confidentiality Agreement Provisions (For Use in the Case of Investment Management Activities)	2 hours per agreement.
Model Trust Certificates	Estimated Burden.
(K) Certificate of Independence	20 minutes per certificate.
(L) Certificate of Compliance	20 minutes per certificate.

These estimates are based on the amount of time imposed on professional trust administrators or private representatives. OGE notes that only one set of the various model trust provisions (items (B) through (H)) will be prepared for a single qualified trust, and only prior to the establishment of that qualified trust. Likewise, other model documents listed above are used in connection with establishing the qualified trust (items (I), (J), and (K)). The remaining model documents are used after the trust's creation (items (A) and (L)). Accordingly, OGE notes that the majority of the time burden for any given trust is imposed during the creation of the trust.

At the present time, there are no active qualified trusts in the executive branch. However, OGE anticipates possible limited use of these model documents during the forthcoming three-year period. OGE estimates that there may be an average of one individual per year who initiates a qualified trust using these model documents during calendar years 2023 through 2025. OGE has accordingly estimated the average annual number of respondents to be two, which represents one respondent establishing a qualified trust and one respondent maintaining a previously established qualified trust. Based on the above, OGE estimates an average annual time burden during the next three years of 120 hours. Using an estimated rate of $300 per hour for the services of a professional trust administrator or private representative, the estimated annual cost burden is $36,000.

Under OMB's implementing regulations for the Paperwork Reduction Act, any recordkeeping, reporting, or disclosure requirement contained in a rule of general applicability is deemed to involve ten or more persons. See 5 CFR 1320.3(c)(4)(i). Therefore, OGE intends to submit, after this first round notice and comment period, all 12 qualified trust model certificates and model documents described above (all of which are included under OMB paperwork control number 3209–0007) for a three-year extension of approval. At that time, OGE will publish a second notice in the **Federal Register** to inform the public and the agencies.

OGE is committed to making ethics records publicly available to the extent possible. The communications documents and the confidentiality agreements (items (A), (I) and (J) on the table above), once completed, will not be available to the public because they contain sensitive, confidential information. The other completed certificates and documents (except for any trust provisions that relate to the testamentary disposition of trust assets) are retained and made publicly available based upon a proper request under section 105 of the EIGA until the periods for retention of all other reports (usually the OGE Form 278 Public Financial Disclosure Reports) of the individual establishing the trust have lapsed (generally six years after the filing of the last report). See 5 U.S.C. app. 105; 5 CFR 2634.603(g)(2). The information collected with these model trust certificates and model trust documents is part of the OGE/GOVT–1 Governmentwide Privacy Act system of records.

In seeking an extension of approval, OGE is proposing several nonsubstantive changes to the 12 qualified trust certificates and model documents.

First, OGE proposes updating the dates in Document A (Blind Trust Communications) to make them more contemporary.

Second, OGE proposes replacing ''OGE'' and ''the Office'' with ''the U.S. Office of Government Ethics'' to make references to the agency consistent with that of the actual model trust language.

Third, OGE proposes replacing references to the Ethics in Government Act of 1978 as ''the Ethics Act'' with ''the Act'' in order to maintain consistency.

Fourth, OGE proposes fixing a typo by removing the period (.) following the ''NW'' in OGE's address.

Request for Comments: Agency and public comment is invited specifically on the need for and practical utility of this information collection, on the accuracy of OGE's burden estimate, on the enhancement of quality, utility, and clarity of the information collected, and on minimizing the burden to the public. Comments received in response to this notice will be summarized for, and may be included with, the OGE request for extension of OMB approval. The comments will also become a matter of public record.

Specifically, OGE seeks public comment on the following:

- Do the model qualified blind trusts provide sufficient direction to establish a trust under the Qualified Trust Program? If not, what provisions could be clearer or what language should be changed?
- Do the model qualified diversified trusts provide sufficient direction to establish a trust under the Qualified Trust Program? If not, what provisions could be clearer or what language should be changed?
- Do the Additional Trust Documents provide sufficient information for individuals to comply with the logistical requirements (*e.g.,* procedure for securing approval of proposed communications) of the Qualified Trust Program? If not, what provisions could be clearer or what language should be changed?

Approved: July 19, 2022.

Emory Rounds,

Director, Office of Government Ethics.

[FR Doc. 2022–15700 Filed 7–21–22; 8:45 am]

BILLING CODE 6345–03–P

DEPARTMENT OF HEALTH AND HUMAN SERVICES

Centers for Disease Control and Prevention

[30Day–22–0824]

Agency Forms Undergoing Paperwork Reduction Act Review

In accordance with the Paperwork Reduction Act of 1995, the Centers for Disease Control and Prevention (CDC) has submitted the information collection request titled ''National Syndromic Surveillance Program (NSSP)'' to the Office of Management and Budget (OMB) for review and approval. CDC previously published a ''Proposed Data Collection Submitted for Public Comment and Recommendations'' notice on May 6, 2022, to obtain comments from the public and affected agencies. CDC received one comment related to the previous notice. This notice serves to allow an additional 30 days for public and affected agency comments.

CDC will accept all comments for this proposed information collection project. The Office of Management and Budget is particularly interested in comments that:

(a) Evaluate whether the proposed collection of information is necessary for the proper performance of the functions of the agency, including whether the information will have practical utility;

(b) Evaluate the accuracy of the agencies estimate of the burden of the proposed collection of information, including the validity of the methodology and assumptions used;

(c) Enhance the quality, utility, and clarity of the information to be collected;

(d) Minimize the burden of the collection of information on those who are to respond, including, through the use of appropriate automated, electronic, mechanical, or other technological collection techniques or other forms of information technology, *e.g.,* permitting electronic submission of responses; and

(e) Assess information collection costs.

To request additional information on the proposed project or to obtain a copy of the information collection plan and instruments, call (404) 639–7570. Comments and recommendations for the proposed information collection should be sent within 30 days of publication of this notice to *www.reginfo.gov/public/do/PRAMain*. Find this particular information collection by selecting ''Currently under 30-day Review—Open for Public Comments'' or by using the search function. Direct written comments and/or suggestions regarding the items contained in this notice to the Attention: CDC Desk Officer, Office of Management and Budget, 725 17th Street NW, Washington, DC 20503 or by fax to (202) 395–5806. Provide written comments within 30 days of notice publication.

Proposed Project

National Syndromic Surveillance Program (NSSP)(OMB Control No. 0920–0824, Exp. 7/31/2022)—Revision—Center for Surveillance, Epidemiology and Laboratory Services (CSELS), Centers for Disease Control and Prevention (CDC)

Background and Brief Description

Syndromic surveillance uses syndromic data and statistical tools to detect, monitor, and characterize unusual activity for further public health investigation or response. Syndromic data include electronic extracts of electronic health records (EHRs) from patient encounter data from emergency departments, urgent care, ambulatory care, and inpatient healthcare settings, as well as laboratory data. Though these data are being captured for different purposes, they are monitored in near real-time as potential indicators of an event, a disease, or an outbreak of public health significance. On the national level, these data are used to improve nationwide situational awareness and enhance responsiveness to hazardous events and disease outbreaks to protect America's health, safety, and security.

The BioSense Program was created by congressional mandate as part of the Public Health Security and Bioterrorism Preparedness and Response Act of 2002 and was launched by the CDC in 2003. The BioSense Program has since been expanded into the National Syndromic Surveillance Program (NSSP) which promotes and advances development of a syndromic surveillance system for the timely exchange of syndromic data.

CDC requests a three-year approval for a Revision for NSSP (OMB Control No. 0920–0824, Exp. 7/31/2022). This Revision includes a request for approval to continue to receive onboarding data from state, local and territorial public health departments about healthcare facilities in their jurisdiction; registration data needed to allow users access to the BioSense Platform tools and services; and data sharing permissions so that state, local and territorial health departments can share data with other state, local and territorial health departments and CDC.

NSSP features the BioSense Platform and a collaborative Community of Practice. The BioSense Platform is a secure integrated electronic health information system that CDC provides, primarily for use by state, local and territorial public health departments. It includes standardized analytic tools and processes that enable users to rapidly collect, evaluate, share, and store syndromic surveillance data. NSSP promotes a Community of Practice in which participants collaborate to advance the science and practice of syndromic surveillance. Health departments use the BioSense Platform to receive healthcare data from facilities in their jurisdiction, conduct syndromic surveillance, and share the data with other jurisdictions and CDC.

The BioSense Platform provides the ability to analyze healthcare encounter data from EHRs, as well as laboratory data. All EHR and laboratory data reside in a cloud-enabled, web-based platform that has Authorization to Operate from CDC. The BioSense Platform sits in the secure, private Government Cloud which is used as a storage and processing mechanism, as opposed to on-site servers at CDC. This environment provides users with easily managed on-demand access to a shared pool of configurable computing resources such as networks, servers, software, tools, storage, and services, with limited need for additional IT support. Each site (*i.e.,* state or local public health department) controls its data within the cloud and is provided with free secure data storage space with tools for posting, receiving, controlling and analyzing their data; an easy-to-use data display dashboard; and a shared environment where users can collaborate and advance public health surveillance practice. Each site is responsible for creating its own data use agreements with the facilities that are sending the data, retains ownership of any data it contributes to its exclusive secure space, and can share data with CDC or users from other sites.

NSSP has three different types of information collection:

(1) Collection of onboarding data about healthcare facilities needed for state, local, and territorial public health departments to submit EHR data to the BioSense Platform;

(2) Collection of registration data needed to allow users access to the BioSense Platform tools and services; and

(3) Collection of data sharing permissions so that state, local, and territorial health departments can share data with other state, local, and territorial health departments and CDC.

Healthcare data shared with CDC can include: EHR data received by state and local public health departments from facilities including hospital emergency departments and inpatient settings, urgent care, and ambulatory care; mortality data from state and local vital statistics offices; laboratory tests ordered and their results from a national private sector laboratory company; and EHR data from the Department of Defense (DoD) and the Department of Health and Human Services (HHS) National Disaster Medical System (NDMS) Disaster Medical Assistance Teams (DMATs). Respondents include state, local, and territorial public health departments. The only burden incurred by the health departments are for submitting onboarding data about facilities to CDC, submitting registration data about users to CDC, and setting up data sharing permissions with CDC. The estimated annual burden is 671 hours. There are no costs to respondents other than their time to participate.

ESTIMATED ANNUALIZED BURDEN HOURS

Type of respondents	Form name	Number of respondents	Number of responses per respondent	Average burden per response (in hours)
State, Local, and Territorial Public Health Departments	Onboarding	20	100	10/60
State, Local, and Territorial Public Health Departments	Registration	20	100	10/60
State, Local, and Territorial Public Health Departments	Data Sharing Permissions	20	1	15/60

Jeffrey M. Zirger,

Lead, Information Collection Review Office, Office of Scientific Integrity, Office of Science, Centers for Disease Control and Prevention.

[FR Doc. 2022–15731 Filed 7–21–22; 8:45 am]

BILLING CODE 4163–18–P

DEPARTMENT OF HEALTH AND HUMAN SERVICES

Centers for Disease Control and Prevention

[30Day–22–22CL]

Agency Forms Undergoing Paperwork Reduction Act Review

In accordance with the Paperwork Reduction Act of 1995, the Centers for Disease Control and Prevention (CDC) has submitted the information collection request titled Population-based Surveillance of Outcomes, Needs, and Well-being of Children and Adolescents with Congenital Heart Defects to the Office of Management and Budget (OMB) for review and approval. CDC previously published a ''Proposed Data Collection Submitted for Public Comment and Recommendations'' notice on February 14, 2022 to obtain comments from the public and affected agencies. CDC received five comments related to the previous notice. This notice serves to allow an additional 30 days for public and affected agency comments.

CDC will accept all comments for this proposed information collection project. The Office of Management and Budget is particularly interested in comments that:

(a) Evaluate whether the proposed collection of information is necessary for the proper performance of the functions of the agency, including whether the information will have practical utility;

(b) Evaluate the accuracy of the agencies estimate of the burden of the proposed collection of information, including the validity of the methodology and assumptions used;

(c) Enhance the quality, utility, and clarity of the information to be collected;

(d) Minimize the burden of the collection of information on those who are to respond, including, through the use of appropriate automated, electronic, mechanical, or other technological collection techniques or other forms of information technology, *e.g.,* permitting electronic submission of responses; and

(e) Assess information collection costs.

To request additional information on the proposed project or to obtain a copy of the information collection plan and instruments, call (404) 639–7570. Comments and recommendations for the proposed information collection should be sent within 30 days of publication of this notice to *www.reginfo.gov/public/do/PRAMain.* Find this particular information collection by selecting ''Currently under 30-day Review—Open for Public Comments'' or by using the search function. Direct written comments and/or suggestions regarding the items contained in this notice to the Attention: CDC Desk Officer, Office of Management and Budget, 725 17th Street NW, Washington, DC 20503 or by fax to (202) 395–5806. Provide written comments within 30 days of notice publication.

Proposed Project

Population-based Surveillance of Outcomes, Needs, and Well-being of Children and Adolescents with Congenital Heart Defects—New—National Center on Birth Defects and Developmental Disabilities (NCBDDD), Centers for Disease Control and Prevention (CDC).

Background and Brief Description

Congenital heart defects (CHD) are the most common type of structural birth defects, affecting approximately one in 110 live-born children. Due to advances in survival, there are approximately one million children with CHD in the United States. With vast declines in mortality from pediatric heart disease over the past 30 years, it is vital to evaluate health, social, educational, and quality of life outcomes beyond infancy and early childhood. However, existing U.S. population-based data are lacking on these outcomes among those born with CHD and the changes that may occur with time and age. U.S. data is needed to provide insight into the public health questions that remain for this population and to develop services and allocate resources to improve long-term health and well-being.

For this project, we will use data from U.S. birth defect surveillance systems, or population-based studies derived from them, to identify a population-based sample of children and adolescents two to 17 years of age born with CHD. Parents and caregivers of these individuals will serve as respondents for the CHSTRONG–KIDS survey. The CHSTRONG–KIDS survey will be administered at three sites. One site will be Atlanta, Georgia, where CDC

has managed and led the Metropolitan Atlanta Congenital Defects Program (MADCP) since 1967 and has a history of collaboration with local hospitals and the Georgia Department of Health. A competitive review process is underway to select the two additional sites. All three sites will then use state databases and online search engines to find current addresses for parents and caregivers of children with CHD and mail paper surveys to them.

Survey questions inquire about the child's cardiac and other healthcare utilization,barriers to health care, quality of life, social and educational outcomes, and transition of care from childhood to adulthoodas well asneeds andexperiencesof thecaregivers. The information collected from this population-based survey will be used to inform current knowledge, allocate resources, develop services, and, ultimately, improve long-term health of children and adolescents born with CHD and their caregivers.

OMB approval is requested for three years. During this period, we estimate receiving completed surveys from a total of 7,667 caregivers of children and adolescents with CHD, which equates to 2,556 respondents per year. To generate sufficient sample size, accounting for non-response, we intend to sample 100% of eligible CHD cases identified through select birth defect surveillance systems. The survey takes approximately 20 minutes to complete, and includes skip patterns so that parents or caregivers are only asked age-relevant questions about their child to minimize burden per response. CDC estimates an annual total burden of 852 hours. Survey participation is voluntary and there are no costs to participants other than their time.

ESTIMATED ANNUALIZED BURDEN HOURS

Type of respondents	Form name	Number of respondents	Number of responses per respondent	Average burden per response (in hours)
Caregivers of individuals aged 2–17 years with a congenital heart defect.	Congenital Heart Survey To Recognize Outcomes, Needs, and wellbeinG of KIDS (CHSTRONG–KIDS).	2,556	1	20/60

Jeffrey M. Zirger,

Lead, Information Collection Review Office, Office of Scientific Integrity, Office of Science, Centers for Disease Control and Prevention.

[FR Doc. 2022–15730 Filed 7–21–22; 8:45 am]

BILLING CODE 4163–18–P

DEPARTMENT OF HEALTH AND HUMAN SERVICES

Centers for Disease Control and Prevention

Solicitation of Nominations for Appointment to the Clinical Laboratory Improvement Advisory Committee (CLIAC)

ACTION: Notice.

SUMMARY: The Centers for Disease Control and Prevention (CDC) is seeking nominations for membership on the Clinical Laboratory Improvement Advisory Committee (CLIAC). CLIAC, consisting of 20 members including the Chair, represents a diverse membership across laboratory specialties, professional roles (laboratory management, technical specialists, physicians, nurses) and practice settings (academic, clinical, public health), and includes a consumer representative.

DATES: Nominations for membership on CLIAC must be received no later than September 30, 2022. Packages received after this time will not be considered for the current membership cycle.

ADDRESSES: All nominations should be emailed to *CLIAC@cdc.gov.*

FOR FURTHER INFORMATION CONTACT: Heather Stang, MS, CLIAC Management Specialist, Deputy Chief, Quality and Safety Systems Branch, Division of Laboratory Systems, Center for Surveillance, Epidemiology, and Laboratory Services, Office of Public Health Scientific Services, Centers for Disease Control and Prevention, 1600 Clifton Road NE, Mailstop V24–3, Atlanta, Georgia 30329–4027; Telephone (404) 498–2769; Email: *HStang@cdc.gov.*

SUPPLEMENTARY INFORMATION: Nominations are being sought for individuals who have the expertise and qualifications necessary to contribute to the accomplishment of the Committee's objectives. Nominees will be selected based on expertise in the fields of microbiology (including bacteriology, mycobacteriology, mycology, parasitology, and virology), immunology (including histocompatibility), chemistry, hematology, pathology (including histopathology and cytology), or genetic testing (including cytogenetics); from representatives in the fields of medical technology, bioinformatics, public health, and clinical practice; and from consumer representatives. Federal employees will not be considered for membership. Members may be invited to serve for up to four-year terms.

The selection of members is based on candidates' qualifications to contribute to accomplishing CLIAC objectives (*https://www.cdc.gov/cliac/*).

The U.S. Department of Health and Human Services (HHS) policy stipulates that committee membership be balanced in terms of points of view represented and the Committee's function. Appointments shall be made without discrimination on the basis of age, race, ethnicity, gender, sexual orientation, gender identity, HIV status, disability, and cultural, religious, or socioeconomic status. Nominees must be U.S. citizens and cannot be full-time employees of the U.S. Government. Current participation on federal workgroups or prior experience serving on a federal advisory committee does not disqualify a candidate; however, HHS policy is to avoid excessive individual service on advisory committees and multiple committee memberships. Committee members are Special Government Employees, requiring the filing of financial disclosure reports at the beginning and annually during their terms. CDC reviews potential candidates for CLIAC membership each year and provides a slate of nominees for consideration to the Secretary of HHS for final selection. HHS notifies selected candidates of their appointment near the start of the term in July or as soon as the HHS selection process is completed. Note that the need for different expertise varies from year to year, and a candidate who is not selected in one year may be reconsidered in a subsequent year. Candidates should submit the following items:

▪ Current curriculum vitae, including complete contact information (telephone numbers, mailing address, email address)

▪ At least one letter of recommendation from person(s) not employed by the U.S. Department of Health and Human Services. Candidates may submit a letter(s) from current HHS employees if they wish, but at least one letter must be submitted by a person not employed by an HHS agency (*e.g.,* CDC, NIH, FDA).

Nominations may be submitted by the candidate or by the person/organization recommending the candidate.

The Director, Strategic Business Initiatives Unit, Office of the Chief Operating Officer, Centers for Disease Control and Prevention, has been delegated the authority to sign **Federal Register** notices pertaining to announcements of meetings and other committee management activities for both the Centers for Disease Control and Prevention and the Agency for Toxic Substances and Disease Registry.

Kalwant Smagh,

Director, Strategic Business Initiatives Unit, Office of the Chief Operating Officer, Centers for Disease Control and Prevention.

[FR Doc. 2022–15740 Filed 7–21–22; 8:45 am]

BILLING CODE 4163–18–P

DEPARTMENT OF HEALTH AND HUMAN SERVICES

Centers for Disease Control and Prevention

[60Day–22–1154; Docket No. CDC–2022–0088]

Proposed Data Collection Submitted for Public Comment and Recommendations

AGENCY: Centers for Disease Control and Prevention (CDC), Department of Health and Human Services (HHS).

ACTION: Notice with comment period.

SUMMARY: The Centers for Disease Control and Prevention (CDC), as part of its continuing effort to reduce public burden and maximize the utility of government information, invites the general public and other federal agencies the opportunity to comment on a continuing information collection, as required by the Paperwork Reduction Act of 1995. This notice invites comment on a proposed information collection project titled Generic Clearance for CDC/ATSDR Formative Research and Tool Development. This information collection request is designed to allow CDC to conduct formative research information collection activities used to inform aspects of surveillance, communications, health promotion, and research project development.

DATES: Written comments must be received on or before September 20, 2022.

ADDRESSES: You may submit comments, identified by Docket No. CDC–2022–0088 by either of the following methods:

• *Federal eRulemaking Portal: www.regulations.gov.* Follow the instructions for submitting comments.

• Mail: Jeffrey M. Zirger, Information Collection Review Office, Centers for Disease Control and Prevention, 1600 Clifton Road NE, MS H21–8, Atlanta, Georgia 30329.

Instructions: All submissions received must include the agency name and Docket Number. CDC will post, without change, all relevant comments to *www.regulations.gov.*

Please note: Submit all comments through the Federal eRulemaking portal (**WWW.REGULATIONS.GOV**) *or by U.S. mail to the address listed above.*

FOR FURTHER INFORMATION CONTACT: To request more information on the proposed project or to obtain a copy of the information collection plan and instruments, contact Jeffrey M. Zirger, Information Collection Review Office, Centers for Disease Control and Prevention, 1600 Clifton Road NE, MS H21–8, Atlanta, Georgia 30329; Telephone: 404–639–7570; Email: *omb@cdc.gov.*

SUPPLEMENTARY INFORMATION: Under the Paperwork Reduction Act of 1995 (PRA) (44 U.S.C. 3501–3520), federal agencies must obtain approval from the Office of Management and Budget (OMB) for each collection of information they conduct or sponsor. In addition, the PRA also requires federal agencies to provide a 60-day notice in the **Federal Register** concerning each proposed collection of information, including each new proposed collection, each proposed extension of existing collection of information, and each reinstatement of previously approved information collection before submitting the collection to OMB for approval. To comply with this requirement, we are publishing this notice of a proposed data collection as described below.

The OMB is particularly interested in comments that will help:

1. Evaluate whether the proposed collection of information is necessary for the proper performance of the functions of the agency, including whether the information will have practical utility;

2. Evaluate the accuracy of the agency's estimate of the burden of the proposed collection of information, including the validity of the methodology and assumptions used;

3. Enhance the quality, utility, and clarity of the information to be collected;

4. Minimize the burden of the collection of information on those who respond, including through the use of automated, electronic, mechanical, or other technological collection techniques or other forms of information technology; *e.g.,* permitting electronic submissions of responses; and

5. Assess information costs.

Proposed Project

Generic Clearance for CDC/ATSDR Formative Research and Tool Development (OMB Control No. 0920–1154, Exp. 1/31/2023)—Extension—Office of Science (OS), Centers for Disease Control and Prevention (CDC).

Background and Brief Description

The Centers for Disease Control and Prevention (CDC) requests approval for an Extension of a Generic Clearance for CDC/ATSDR Formative Research and Tool Development. This information collection request is designed to allow CDC to conduct formative research information collection activities used to inform many aspects of surveillance, communications, health promotion, and research project development at CDC. Formative research is the basis for developing effective strategies including communication channels, for influencing behavior change. It helps researchers identify and understand the characteristics, interests, behaviors and needs of target populations that influence their decisions and actions.

Formative research is integral in developing programs, as well as improving existing and ongoing programs. Formative research looks at the community in which a public health intervention is being or will be implemented and helps the project staff understand the interests, attributes and needs of different populations and persons in that community. Formative research occurs before a program is designed and implemented, or while a program is being conducted.

At CDC, formative research is necessary for developing new programs or adapting programs that deal with the complexity of behaviors, social context, cultural identities, and health care that underlie the epidemiology of diseases and conditions in the U.S. CDC conducts formative research to develop public-sensitive communication messages and user-friendly tools prior to developing or recommending interventions, or care. Sometimes these

studies are entirely behavioral but most often they are cycles of interviews and focus groups designed to inform the development of a product.

Products from these formative research studies will be used for prevention of disease. Findings from these studies may also be presented as evidence to disease-specific National Advisory Committees, to support revisions to recommended prevention and intervention methods, as well as new recommendations.

Much of CDC's health communication takes place within campaigns that have fairly lengthy planning periods and/or timeframes that accommodate the standard federal process for approving data collections. Short-term qualitative interviewing and cognitive research techniques have previously proven invaluable in the development of scientifically valid and population-appropriate methods, interventions, and instruments.

This request includes studies investigating the utility and acceptability of proposed sampling and recruitment methods, intervention contents and delivery, questionnaire domains, individual questions, and interactions with project staff or electronic data collection equipment. These activities will also provide information about how respondents answer questions and ways in which question response bias and error can be reduced.

This request also includes collection of information from public health programs to assess needs related to initiation of a new program activity or expansion or changes in scope or implementation of existing program activities to adapt them to current needs. The information collected will be used to advise programs and provide capacity-building assistance tailored to identify needs.

Overall, these development activities are intended to provide information that will increase the success of the surveillance or research projects through increasing response rates and decreasing response error, thereby decreasing future data collection burden to the public. The studies that will be covered under this request will include one or more of the following investigational modalities: (1) structured and qualitative interviewing for surveillance, research, interventions and material development; (2) cognitive interviewing for development of specific data collection instruments; (3) methodological research; (4) usability testing of technology-based instruments and materials; (5) field testing of new methodologies and materials; (6) investigation of mental models for health decision-making to inform health communication messages; and (7) organizational needs assessments to support development of capacity. Respondents who will participate in individual and group interviews (qualitative, cognitive, and computer assisted development activities) are selected purposively from those who respond to recruitment advertisements.

In addition to utilizing advertisements for recruitment, respondents who will participate in research on survey methods may be selected purposively or systematically from within an ongoing surveillance or research project. Participation of respondents is voluntary. CDC requests OMB approval for an estimated 20,000 annual burden hours. There is no cost to participants other than their time to participate.

ESTIMATED ANNUALIZED BURDEN HOURS

Type of respondent	Form name	Number of respondents	Number of responses per respondent	Average hours per response (in hours)	Total burden hours
General public and health care providers	Screener	10,000	1	15/60	2,500
	Interview	5,000	1	1	5,000
	Focus Group Interview	5,000	1	2	10,000
	Survey	5,000	1	30/60	2,500
Total					20,000

Jeffrey M. Zirger,

Lead, Information Collection Review Office, Office of Scientific Integrity, Office of Science, Centers for Disease Control and Prevention.

[FR Doc. 2022–15736 Filed 7–21–22; 8:45 am]

BILLING CODE 4163–18–P

DEPARTMENT OF HEALTH AND HUMAN SERVICES

Centers for Disease Control and Prevention

National Center for Health Statistics (NCHS), ICD–10 Coordination and Maintenance (C&M) Committee Meeting.

AGENCY: Centers for Disease Control and Prevention (CDC), Department of Health and Human Services (HHS).

ACTION: Notice of meeting.

SUMMARY: The CDC, National Center for Health Statistics (NCHS), Classifications and Public Health Data Standards Staff, announces the following meeting of the ICD–10 Coordination and Maintenance (C&M) Committee. This meeting is open to the public, limited only by the number of audio lines available. Online registration is not required.

DATES: The meeting will be held on September 13, 2022, from 9 a.m. to 5 p.m., EDT, and September 14, 2022, from 9 a.m. to 5 p.m., EDT.

ADDRESSES: This is a virtual meeting. Information will be provided on each of the respective web pages when it becomes available. For CDC, NCHS: *https://www.cdc.gov/nchs/icd/icd10cm_maintenance.htm.* For the Centers for Medicare & Medicaid Services (CMS), HHS: *https://www.cms.gov/Medicare/Coding/ICD10/C-and-M-Meeting-Materials.*

FOR FURTHER INFORMATION CONTACT: Traci Ramirez, Medical Systems Specialist, CDC, NCHS, 3311 Toledo Road, Hyattsville, Maryland 20782–2064; Telephone: (301) 458–4454; Email: *TRamirez@cdc.gov.*

SUPPLEMENTARY INFORMATION:

Purpose: The ICD–10 Coordination and Maintenance Committee is a public forum for the presentation of proposed modifications to the International Classification of Diseases, Tenth Revision, Clinical Modification (CM) and ICD–10 Procedure Coding System (PCS).

Matters To Be Considered: The tentative agenda will include discussions on the ICD–10–CM and ICD–10–PCS topics listed below. Agenda items are subject to change as priorities dictate. Please refer to the posted agenda for updates one month prior to the meeting.

ICD–10–PCS Topics

1. Administration of Lovotibeglogene autotemcel (lovo-cel) *
2. Administration of Exagamglogene autotemcel (exa-cel) **
3. External Support Device for AV Fistula Creation
4. Implantation of Polymethyl Methacrylate Cranioplasty Plates *
5. Insertion of Transcatheter Bicaval Valve System *
6. Implantation of Bioprosthetic Femoral Venous Valve
7. Intubated Prone Positioning
8. Section X Updates
9. Addenda and Key Updates

* Requestor intends to submit a new technology add-on payment (NTAP) application for FY 2024.

** Request is for an April 1, 2023, implementation date, and the requestor intends to submit an NTAP application for FY 2024 consideration.

Presentations for procedure code requests are conducted by both the requestor and CMS during the C&M Committee meeting. Discussion from the requestor generally focuses on the clinical issues for the procedure or technology, followed by the proposed coding options from a CMS analyst. Topics presented may also include requests for new procedure codes that relate to a new technology add-on payment (NTAP) policy request.

CMS is continuing to modify the approach for presenting the new NTAP-related ICD–10–PCS procedure code requests that involve the administration of a therapeutic agent for the September 13–14, 2022, ICD–10 Coordination and Maintenance Committee meeting. Consistent with the requirements of section 1886(d)(5)(K)(iii) of the Social Security Act, applicants submitted requests to create a unique procedure code to describe the administration of a therapeutic agent, such as the option to create a new code in Section X within the ICD–10–PCS procedure code classification. CMS will initially display only those meeting materials associated with the NTAP-related ICD–10–PCS procedure code requests that involve the administration of a therapeutic agent on the CMS website in early August 2022 at: *https://www.cms.gov/Medicare/Coding/ICD10/C-and-M-Meeting-Materials.*

The two NTAP-related ICD–10–PCS procedure code requests that involve the administration of a therapeutic agent are:

1. Administration of Lovotibeglogene autotemcel (lovo-cel) *
2. Administration of Exagamglogene autotemcel (exa-cel) **

These topics will not be presented during the September 13–14, 2022, meeting. CMS will solicit public comments regarding any clinical questions or coding options included for these two procedure code topics in advance of the meeting continuing through the end of the respective public comment periods. Members of the public should send any questions or comments to the CMS mailbox at: *ICDProcedureCodeRequest@cms.hhs.gov.*

CMS intends to post a question-and-answer document in advance of the meeting to address any clinical or coding questions that members of the public may have submitted. Following the conclusion of the meeting, CMS will post an updated question-and-answer document to address any additional clinical or coding questions that members of the public may have submitted during the meeting that CMS was not able to address or that were submitted after the meeting.

The NTAP-related ICD–10–PCS procedure code requests that do not involve the administration of a therapeutic agent and all non-NTAP-related procedure code requests will continue to be presented during the virtual meeting on September 13, 2022, consistent with the standard meeting process.

CMS will make all meeting materials and related documents available at: *https://www.cms.gov/Medicare/Coding/ICD10/C-and-M-Meeting-Materials.* Any inquiries related to the procedure code topics scheduled for the September 13–14, 2022, ICD–10 Coordination and Maintenance Committee meeting that are under consideration for April 1, 2023, or October 1, 2023, implementation should be sent to the CMS mailbox at: *ICDProcedureCodeRequest@cms.hhs.gov.*

ICD–10–CM Topics

1. Extraocular Muscle Entrapment
2. IGAN
3. Inappropriate Sinus Tachycardia
4. Insulin Resistance Syndrome
5. Leukodystrophies
6. Nontraumatic Coma Not Elsewhere Classified
7. Sickle Cell Retinopathy
8. Addenda

The Director, Strategic Business Initiatives Unit, Office of the Chief Operating Officer, Centers for Disease Control and Prevention, has been delegated the authority to sign **Federal Register** notices pertaining to announcements of meetings and other committee management activities, for both the Centers for Disease Control and Prevention and the Agency for Toxic Substances and Disease Registry.

Kalwant Smagh,

Director, Strategic Business Initiatives Unit, Office of the Chief Operating Officer, Centers for Disease Control and Prevention.

[FR Doc. 2022–15741 Filed 7–21–22; 8:45 am]

BILLING CODE 4163–18–P

DEPARTMENT OF HEALTH AND HUMAN SERVICES

Centers for Disease Control and Prevention

[30Day–22–0856]

Agency Forms Undergoing Paperwork Reduction Act Review

In accordance with the Paperwork Reduction Act of 1995, the Centers for Disease Control and Prevention (CDC) has submitted the information collection request titled ''National Quitline Data Warehouse (NQDW)'' to the Office of Management and Budget (OMB) for review and approval. CDC previously published a ''Proposed Data Collection Submitted for Public Comment and Recommendations'' notice on July 7, 2021 to obtain comments from the public and affected agencies. CDC received three comments related to the previous notice. This notice serves to allow an additional 30 days for public and affected agency comments.

CDC will accept all comments for this proposed information collection project. The Office of Management and Budget is particularly interested in comments that:

(a) Evaluate whether the proposed collection of information is necessary for the proper performance of the functions of the agency, including whether the information will have practical utility;

(b) Evaluate the accuracy of the agencies estimate of the burden of the proposed collection of information, including the validity of the methodology and assumptions used;

(c) Enhance the quality, utility, and clarity of the information to be collected;

(d) Minimize the burden of the collection of information on those who are to respond, including, through the use of appropriate automated, electronic, mechanical, or other technological collection techniques or other forms of information technology, *e.g.,* permitting electronic submission of responses; and

(e) Assess information collection costs.

To request additional information on the proposed project or to obtain a copy of the information collection plan and instruments, call (404) 639–7570. Comments and recommendations for the proposed information collection should be sent within 30 days of publication of this notice to *www.reginfo.gov/public/do/PRAMain*. Find this particular information collection by selecting ''Currently under 30-day Review—Open for Public Comments'' or by using the search function. Direct written comments and/or suggestions regarding the items contained in this notice to the Attention: CDC Desk Officer, Office of Management and Budget, 725 17th Street NW, Washington, DC 20503 or by fax to (202) 395–5806. Provide written comments within 30 days of notice publication.

Proposed Project

National Quitline Data Warehouse (NQDW) (OMB Control No. 0920–0856, Exp. 10/31/2022)—Revision—National Center for Chronic Disease Prevention and Health Promotion (NCCDPHP), Centers for Disease Control and Prevention (CDC).

Background and Brief Description

Since 2010, the National Quitline Data Warehouse (NQDW) has collected a core set of information from the 50 U.S. states, the District of Columbia, Guam, and Puerto Rico regarding what services telephone quitlines offer to tobacco users as well as the number and type of tobacco users who receive services from telephone quitlines. The data collection was modified in 2015 to collect data from the Asian Smokers' Quitline (ASQ) in addition to the other 53 states/territories that provide data and included five new questions to the NQDW Intake Questionnaire to help CDC and states tailor quitline services to the needs of its callers. Additionally, collection of the NQDW Services Survey was changed from quarterly to semiannually in 2019.

The NQDW provides data on the general smoking population who contact their state quitlines, but also allows for collections of information about key subgroups of tobacco users who contact state quitlines to better support cessation services. Data is collected on tobacco users who received service from state telephone quitlines from all funded U.S. states, territories, and the Asian Smokers' Quitline (ASQ) through the NQDW Intake Questionnaire. The NQDW Seven-Month Follow-up Questionnaire is administered to tobacco users who received services from the ASQ only. Data on the quitline call volume, number of tobacco users served, and the services offered by state quitlines will be provided by state health department personnel who manage the quitline, or their designee, such as contracted quitline service providers, using the NQDW Quitline Services Survey. Data collected from the NQDW is analyzed with simple descriptive data tabulations, and trends are currently reported online through the CDC State Tobacco Activities Tracking and Evaluation (STATE) System website. More complex statistical analyses, including multivariate regression techniques will be utilized to assess quitline outcomes such as quitline reach, service utilization, how callers reported hearing about the quitline, and the effectiveness of quitline promotions and the CDC Tips From Former Smokers national tobacco education media campaigns on state quitline call volume and tobacco users receiving services from state quitlines. CDC uses the information collected by the NQDW for ongoing monitoring, reporting, and evaluation related to state quitlines. Select data from the NQDW are reported online through the CDC's STATE System website (*https://www.cdc.gov/statesystem*).

CDC requests OMB approval to continue the NQDW information collection for three years. Fifty states, the District of Columbia, Guam, and Puerto Rico continue to receive funding to participate. This Revision reflects inclusion of additional measures, including those related to e-cigarette use and online quitline services, that reflect the impact of new technologies. Adding these measures to the NQDW survey instruments will impose minimal additional burden on states but will substantially improve the utility of the NQDW data to identify use of state quitlines by key tobacco use populations and through modalities other than telephone calls.

Participation in the Caller Intake and Follow-Up Interviews is voluntary for quitline callers. The estimated burden is 10 minutes for a complete intake call conducted with an individual who calls on their own behalf. The estimated burden is one minute for a caller who requests information for someone else, as these callers complete only a subset of questions on the Intake Questionnaire.

As a condition of funding (CDC–RFA–DP20–2001), the 54 cooperative agreement awardees are required to submit NQDW intake data quarterly, and services survey data semiannually. CDC recognizes that awardees incur additional burden for preparing and transmitting summary files with their de-identified caller intake and follow-up data. This burden is acknowledged in the instructions for transmitting the electronic data files. There is a net decrease in burden hours, primarily due to decreases in the overall number of telephone calls to the quitlines, which is estimated to be only partially offset by the use of other quitline modalities.

CDC requests OMB approval for an estimated 68,089 annual burden hours. There is no cost to respondents other than their time to participate.

ESTIMATED ANNUALIZED BURDEN HOURS

Type of respondent	Form name	Number of respondents	Number of responses per respondent	Average burden per response (in hours)
Quitline participants who contact the quitline for help for themselves.	NQDW Intake Questionnaire (English-complete).	405,053	1	10/60
	ASQ Intake Questionnaire (Chinese, Korean, or Vietnamese-complete).	1,686	1	10/60
	ASQ Seven-Month Follow-up Questionnaire	236	1	7/60
Participants who contact the quitline on behalf of someone else.	NQDW Intake Questionnaire (English-subset).	819	1	1/60
	ASQ Intake Questionnaire (Chinese, Korean, or Vietnamese-subset).	249	1	1/60
Tobacco Control Manager or their Designee/quitline Service Provider.	Submission of NQDW Intake Questionnaire Electronic Data File to CDC.	54	4	1

ESTIMATED ANNUALIZED BURDEN HOURS—Continued

Type of respondent	Form name	Number of respondents	Number of responses per respondent	Average burden per response (in hours)
	Submission of NQDW (ASQ) Seven-Month Follow-up Electronic Data File to CDC.	1	1	1
	NQDW Quitline Services Survey	54	2	20/60

Jeffrey M. Zirger,

Lead, Information Collection Review Office, Office of Scientific Integrity, Office of Science, Centers for Disease Control and Prevention.

[FR Doc. 2022–15732 Filed 7–21–22; 8:45 am]

BILLING CODE 4163–18–P

DEPARTMENT OF HEALTH AND HUMAN SERVICES

Centers for Disease Control and Prevention

[60Day–22–22HN; Docket No. CDC–2022–0089]

Proposed Data Collection Submitted for Public Comment and Recommendations

AGENCY: Centers for Disease Control and Prevention (CDC), Department of Health and Human Services (HHS).

ACTION: Notice with comment period.

SUMMARY: The Centers for Disease Control and Prevention (CDC), as part of its continuing effort to reduce public burden and maximize the utility of government information, invites the general public and other federal agencies the opportunity to comment on a proposed information collection, as required by the Paperwork Reduction Act of 1995. This notice invites comment on a proposed information collection project titled School-Based Active Surveillance (SBAS) of Myalgic Encephalomyelitis/Chronic Fatigue Syndrome (ME/CFS) Among Schoolchildren: Phase-2 of the National Roll-Out. This project will expand on the work from the pilot phase and increase the number of local schools, school districts, states and subsequently school nurses involved in active surveillance of chronic conditions, including ME/CFS, using an electronic data collection platform.

DATES: CDC must receive written comments on or before September 20, 2022.

ADDRESSES: You may submit comments, identified by Docket No. CDC–2022–0089 by either of the following methods:

- *Federal eRulemaking Portal: www.regulations.gov*. Follow the instructions for submitting comments.
- *Mail:* Jeffrey M. Zirger, Information Collection Review Office, Centers for Disease Control and Prevention, 1600 Clifton Road NE, MS H21–8, Atlanta, Georgia 30329.

Instructions: All submissions received must include the agency name and Docket Number. CDC will post, without change, all relevant comments to *www.regulations.gov*.

Please note: Submit all comments through the Federal eRulemaking portal (www.regulations.gov) or by U.S. mail to the address listed above.

FOR FURTHER INFORMATION CONTACT: To request more information on the proposed project or to obtain a copy of the information collection plan and instruments, contact Jeffrey M. Zirger, Information Collection Review Office, Centers for Disease Control and Prevention, 1600 Clifton Road NE, MS H21–8, Atlanta, Georgia 30329; Telephone: 404–639–7570; Email: *omb@cdc.gov*.

SUPPLEMENTARY INFORMATION: Under the Paperwork Reduction Act of 1995 (PRA) (44 U.S.C. 3501–3520), federal agencies must obtain approval from the Office of Management and Budget (OMB) for each collection of information they conduct or sponsor. In addition, the PRA also requires federal agencies to provide a 60-day notice in the **Federal Register** concerning each proposed collection of information, including each new proposed collection, each proposed extension of existing collection of information, and each reinstatement of previously approved information collection before submitting the collection to the OMB for approval. To comply with this requirement, we are publishing this notice of a proposed data collection as described below.

The OMB is particularly interested in comments that will help:

1. Evaluate whether the proposed collection of information is necessary for the proper performance of the functions of the agency, including whether the information will have practical utility;

2. Evaluate the accuracy of the agency's estimate of the burden of the proposed collection of information, including the validity of the methodology and assumptions used;

3. Enhance the quality, utility, and clarity of the information to be collected;

4. Minimize the burden of the collection of information on those who are to respond, including through the use of appropriate automated, electronic, mechanical, or other technological collection techniques or other forms of information technology, *e.g.,* permitting electronic submissions of responses; and

5. Assess information collection costs.

Proposed Project

School-Based Active Surveillance (SBAS) of Myalgic Encephalomyelitis/Chronic Fatigue Syndrome Among Schoolchildren: Phase-2 of the National Roll-Out—New—National Center for Emerging Zoonotic and Infectious Disease (NCEZID), Centers for Disease Control and Prevention (CDC).

Background and Brief Description

Myalgic encephalomyelitis/chronic fatigue syndrome (ME/CFS), a complex, chronic, debilitating multi-system disease, affects an estimated 836,000 to 2.5 million persons in the United States. However, about 90% of people with ME/CFS have not received an official diagnosis from a healthcare professional. ME/CFS affects up to two in 100 children and adolescents, which often goes undiagnosed by healthcare professionals.

Data on chronic conditions among schoolchildren, such as asthma, has been collected over the years, but there has been little to no emphasis on ME/CFS in the United States. Chronic conditions among school-aged children likely account for a high proportion of chronic school absenteeism and school withdrawal. Conducting active surveillance among students using school nurses could expedite the diagnosis and management of children who present with symptoms commonly seen in ME/CFS. This involves educating school nurses about ME/CFS and its related syndromes, how to best approach parents and guardians when suggesting the diagnosis, and how to

support the educational success of students with chronic diseases.

National active surveillance in schools for ME/CFS coupled with education of school nurses about ME/CFS could help improve measuring the burden of ME/CFS in children and provide insights for future plans to improve healthcare in children suffering from ME/CFS and other chronic health conditions. In the next phase of this project, we will expand the active surveillance project beyond the pilot schools to include additional schools in the pilot states as well as in other states. In this national rollout, school nurses will continue to receive education on data collection and ME/CFS as well as technical assistance and training on using the electronic data collection reporting platform.

CDC requests OMB approval for an estimated 631 annual burden hours. There is no cost to respondents other than their time to participate.

ESTIMATED ANNUALIZED BURDEN HOURS

Type of respondents	Form name	Number of respondents	Number of responses per respondent	Average burden per response (in hours)	Total burden (in hours)
Frontline School Nurses	Electronic Platform Quarterly Chronic Absenteeism Data Reporting Form.	20	4	5	400
Frontline School Nurses	Demographic Data Collection Points	20	1	6	120
Frontline School Nurses	Site Baseline Survey	20	1	12/60	4
Frontline School Nurses	Question Guide for Face-to-Face Evaluation Interviews.	20	3	90/60	90
State Data Coordinators	Webinar 1 Feedback Form	50	1	18/60	15
School District Representative	School District Feedback Form	8	1	18/60	2
Total					631

Jeffrey M. Zirger,

Lead, Information Collection Review Office, Office of Scientific Integrity, Office of Science, Centers for Disease Control and Prevention.

[FR Doc. 2022–15735 Filed 7–21–22; 8:45 am]

BILLING CODE 4163–18–P

DEPARTMENT OF HEALTH AND HUMAN SERVICES

Centers for Disease Control and Prevention

[60Day–22–22HK; Docket No. CDC–2022–0087]

Proposed Data Collection Submitted for Public Comment and Recommendations

AGENCY: Centers for Disease Control and Prevention (CDC), Department of Health and Human Services (HHS).

ACTION: Notice with comment period.

SUMMARY: The Centers for Disease Control and Prevention (CDC), as part of its continuing effort to reduce public burden and maximize the utility of government information, invites the general public and other federal agencies the opportunity to comment on a proposed information collection, as required by the Paperwork Reduction Act of 1995. This notice invites comment on a proposed information collection project titled Enhanced Surveillance of Persons with Early and Late HIV Diagnosis. This project collects information from people who were recently diagnosed with HIV at early (stage 0) or late diagnosis (stage 3) to understand barriers to HIV prevention and testing services to contributing to transmission.

DATES: CDC must receive written comments on or before September 20, 2022.

ADDRESSES: You may submit comments, identified by Docket No. CDC–2022–0087 by either of the following methods:

- *Federal eRulemaking Portal: www.regulations.gov.* Follow the instructions for submitting comments.
- *Mail:* Jeffrey M. Zirger, Information Collection Review Office, Centers for Disease Control and Prevention, 1600 Clifton Road, NE, MS H21–8, Atlanta, Georgia 30329.

Instructions: All submissions received must include the agency name and Docket Number. CDC will post, without change, all relevant comments to *www.regulations.gov.*

Please note: Submit all comments through the Federal eRulemaking portal (www.regulations.gov) or by U.S. mail to the address listed above.

FOR FURTHER INFORMATION CONTACT: To request more information on the proposed project or to obtain a copy of the information collection plan and instruments, contact Jeffrey M. Zirger, Information Collection Review Office, Centers for Disease Control and Prevention, 1600 Clifton Road NE, MS H21–8, Atlanta, Georgia 30329; Telephone: 404–639–7118; Email: *omb@cdc.gov.*

SUPPLEMENTARY INFORMATION: Under the Paperwork Reduction Act of 1995 (PRA) (44 U.S.C. 3501–3520), federal agencies must obtain approval from the Office of Management and Budget (OMB) for each collection of information they conduct or sponsor. In addition, the PRA also requires federal agencies to provide a 60-day notice in the **Federal Register** concerning each proposed collection of information, including each new proposed collection, each proposed extension of existing collection of information, and each reinstatement of previously approved information collection before submitting the collection to the OMB for approval. To comply with this requirement, we are publishing this notice of a proposed data collection as described below.

The OMB is particularly interested in comments that will help:

1. Evaluate whether the proposed collection of information is necessary for the proper performance of the functions of the agency, including whether the information will have practical utility;

2. Evaluate the accuracy of the agency's estimate of the burden of the proposed collection of information, including the validity of the methodology and assumptions used;

3. Enhance the quality, utility, and clarity of the information to be collected;

4. Minimize the burden of the collection of information on those who are to respond, including through the use of appropriate automated, electronic, mechanical, or other technological collection techniques or other forms of information technology,

e.g., permitting electronic submissions of responses; and

5. Assess information collection costs.

Proposed Project

Enhanced Surveillance of Persons with Early and Late HIV Diagnosis—New—National Center for HIV, Viral Hepatitis, STD, and TB Prevention (NCHHSTP), Centers for Disease Control and Prevention (CDC).

Background and Brief Description

National HIV Surveillance System (NHSS) data indicate that 37,968 adolescents and adults received an HIV diagnosis in the United States and dependent areas in 2018. During 2015–2019, the overall rate of annual diagnoses decreased only slightly, from 12.4 to 11.1 per 100,000. Although not every jurisdiction reports complete laboratory data needed to identify stage of infection, data from most jurisdictions show that many of these cases were classified as Stage 0 (7.9%) or Stage 3 (20.2%) infection (*i.e.,* cases diagnosed in early infection or late infection, respectively). Early and late diagnoses represent recent failures in prevention and testing systems, as well as opportunities to understand needed improvements in these systems.

The NHSS classifies HIV infections as Stage 0 if the first positive HIV test was within six months of a negative HIV test. Persons who received a diagnosis at Stage 0 (*i.e.,* early diagnosis) were able to access HIV testing shortly after infection yet were unable to benefit from biomedical and behavioral interventions to prevent HIV infection.

The federal initiative ''Ending the HIV Epidemic in the U.S.'' (EHE), prioritizes the provision of HIV preexposure prophylaxis (PrEP), syringe services programs, treatment as prevention efforts, and other proven interventions—as part of the Prevent pillar to prevent new HIV infections of the EHE initiative.

HIV infections are classified as Stage 3 (AIDS) by the presence of an AIDS-defining opportunistic infection or by the lowest CD4 lymphocyte test result. Persons with Stage 3 infection at the time of their initial HIV diagnosis (*i.e.,* late diagnosis) did not benefit from timely receipt of testing or HIV prevention interventions and were likely unaware of their infection for a substantial length of time. Nationally, an estimated 13.3% of persons with HIV are unaware of their infection, contributing to an estimated 40% of all ongoing transmission. Increasing early diagnosis is a key pillar of efforts to end HIV in the United States.

Given the continued occurrence of HIV infections in the United States, the barriers and gaps associated with low uptake of HIV testing and prevention services must be addressed to reduce new infections and facilitate timely diagnosis and treatment. Therefore, CDC is sponsoring this data collection to improve understanding of barriers and gaps associated with new infection and late diagnosis in the era of multiple testing modalities and prevention options such as PrEP. These enhanced surveillance activities will identify actionable missed opportunities for early diagnosis and prevention, thus informing allocation of resources, development and prioritization of interventions, and evidence-based local and national decisions to improve HIV testing and address prevention gaps.

CDC requests OMB approval for an estimated 3167 annual burden hours. There are no costs to respondents other than their time to participate.

ESTIMATED ANNUALIZED BURDEN HOURS

Type of respondent	Form name	Number of respondents	Number of responses per respondent	Average burden per response (in hr)	Total burden (in hr)
Persons screened	Recruitment Screener English	2,500	1	5/60	208
Persons screened	Recruitment Screener Spanish	500	1	5/60	42
Enrolled Participant: English Adults	Survey Consent English	2,000	1	15/60	500
Enrolled Participant: Spanish Adults	Survey Consent Spanish	500	1	15/60	125
Enrolled Participant: English Adults	English Survey	2,000	1	55/60	1,833
Enrolled Participant—Spanish Adults	Spanish Survey	500	1	55/60	458
Total					3,167

Jeffrey M. Zirger,

Lead, Information Collection Review Office, Office of Scientific Integrity, Office of Science, Centers for Disease Control and Prevention.

[FR Doc. 2022–15734 Filed 7–21–22; 8:45 am]

BILLING CODE 4163–18–P

DEPARTMENT OF HEALTH AND HUMAN SERVICES

Centers for Disease Control and Prevention

[60Day–22–22HJ; Docket No. CDC–2022–0086]

Proposed Data Collection Submitted for Public Comment and Recommendations

AGENCY: Centers for Disease Control and Prevention (CDC), Department of Health and Human Services (HHS).

ACTION: Notice with comment period.

SUMMARY: The Centers for Disease Control and Prevention (CDC), as part of its continuing effort to reduce public burden and maximize the utility of government information, invites the general public and other federal agencies the opportunity to comment on a proposed information collection, as required by the Paperwork Reduction Act of 1995. This notice invites comment on a proposed information collection project titled Field Testing of Spanish-language Toolbox Talks for Spanish-speaking Construction Workers. The project will evaluate Spanish-language toolbox talks with Spanish-speaking construction workers to assess the effectiveness of toolbox talks as an OSH training tool with this audience.

DATES: CDC must receive written comments on or before September 20, 2022.

ADDRESSES: You may submit comments, identified by Docket No. CDC–2022–0086 by either of the following methods:

- *Federal eRulemaking Portal: www.regulations.gov*. Follow the instructions for submitting comments.
- *Mail:* Jeffrey M. Zirger, Information Collection Review Office, Centers for Disease Control and Prevention, 1600 Clifton Road NE, MS H21–8, Atlanta, Georgia 30329.

Instructions: All submissions received must include the agency name and Docket Number. CDC will post, without change, all relevant comments to *www.regulations.gov*.

Please note: Submit all comments through the Federal eRulemaking portal (www.regulations.gov) or by U.S. mail to the address listed above.

FOR FURTHER INFORMATION CONTACT: To request more information on the proposed project or to obtain a copy of the information collection plan and instruments, contact Jeffrey M. Zirger, Information Collection Review Office, Centers for Disease Control and Prevention, 1600 Clifton Road NE, MS H21–8, Atlanta, Georgia 30329; Telephone: 404–639–7570; Email: *omb@cdc.gov*.

SUPPLEMENTARY INFORMATION: Under the Paperwork Reduction Act of 1995 (PRA) (44 U.S.C. 3501–3520), federal agencies must obtain approval from the Office of Management and Budget (OMB) for each collection of information they conduct or sponsor. In addition, the PRA also requires federal agencies to provide a 60-day notice in the **Federal Register** concerning each proposed collection of information, including each new proposed collection, each proposed extension of existing collection of information, and each reinstatement of previously approved information collection before submitting the collection to the OMB for approval. To comply with this requirement, we are publishing this notice of a proposed data collection as described below.

The OMB is particularly interested in comments that will help:

1. Evaluate whether the proposed collection of information is necessary for the proper performance of the functions of the agency, including whether the information will have practical utility;
2. Evaluate the accuracy of the agency's estimate of the burden of the proposed collection of information, including the validity of the methodology and assumptions used;
3. Enhance the quality, utility, and clarity of the information to be collected;
4. Minimize the burden of the collection of information on those who are to respond, including through the use of appropriate automated, electronic, mechanical, or other technological collection techniques or other forms of information technology, *e.g.,* permitting electronic submissions of responses; and
5. Assess information collection costs.

Proposed Project

Field Testing of Spanish-language Toolbox Talks for Spanish-speaking Construction Workers—New—National Institute for Occupational Safety and Health (NIOSH), Centers for Disease Control and Prevention (CDC).

Background and Brief Description

Construction is one of the most dangerous industry sectors in which to be employed. There are approximately 1.8 million Spanish-speaking workers employed in construction, and Latino workers are injured and killed at rates 2–3 times higher than non-Latino construction workers. Among the challenges to meeting the occupational safety and health (OSH) needs of the construction industry is the large number of small businesses, with approximately 90% of small construction contractors employing 20 or fewer workers. Over 40% of Spanish-speaking construction workers work for businesses employing 10 or fewer workers. Latino workers are more likely to be employed in small establishments, and these small establishments have a higher risk of fatal injuries. In 2010 alone, 56.3% of construction deaths occurred in establishments with fewer than 20 employees. From 2003–2008, small establishments with 1–10 employees reported an average of 47% work-related deaths among Latino workers, while employing 44% of the Latino construction workers. These small construction contractors have limited resources to apply to OSH training needs.

Toolbox talks are brief (approximately 5–10 minutes) OSH instructional sessions held on the worksite or at the contractor's office. Requiring minimal resources, toolbox talks may provide an ideal OSH training format for small construction contractors and have been successfully disseminated throughout the construction industry. However, evaluations of their effectiveness have been limited, the results of which suggest increased knowledge, positive safety attitude change, and increased intentions to apply recommended safe work practices among English-speaking workers. Building on this initial work, the purpose of this study is to evaluate a subset of Spanish language toolbox talks as an OSH training tool for Spanish-speaking construction workers, and to assess whether the addition of a narrative scenario and discussion questions increases training effectiveness.

Data will be collected at the work site for four weeks, using a total of four toolbox talks. The data collection will occur prior to presentation of the first toolbox talk and following presentation of the final toolbox talk of the project. The data collection instrument will consist of items that will include basic demographics, safety knowledge related to the content of the selected toolbox talks, safety culture, and attitudes toward safety.

CDC requests OMB approval for an estimated 333 annual burden hours. There are no costs to respondents other than their time to participate.

ESTIMATED ANNUALIZED BURDEN HOURS

Type of respondents	Form name	Number of respondents	Number of responses per respondent	Average burden per response (in hours)	Total burden hours
Construction workers	Pre-Test	400	1	20/60	133
Construction workers	Post-Test	400	1	20/60	133
Construction workers	Toolbox Talks Training	400	1	10/60	67
Total					333

Jeffrey M. Zirger,
Lead, Information Collection Review Office, Office of Scientific Integrity, Office of Science, Centers for Disease Control and Prevention.

[FR Doc. 2022–15733 Filed 7–21–22; 8:45 am]
BILLING CODE 4163–18–P

DEPARTMENT OF HEALTH AND HUMAN SERVICES

Centers for Medicare & Medicaid Services

[CMS–1778–N]

Medicare Program; Announcement of the Advisory Panel on Hospital Outpatient Payment Meeting—August 22–23, 2022

AGENCY: Centers for Medicare & Medicaid Services (CMS), HHS.

ACTION: Notice of meeting.

SUMMARY: This notice announces a virtual meeting of the Advisory Panel on Hospital Outpatient Payment (the Panel) for Calendar Year 2022. The purpose of the Panel is to advise the Secretary of the Department of Health and Human Services and the Administrator of the Centers for Medicare & Medicaid Services concerning the clinical integrity of the Ambulatory Payment Classification groups and their associated weights, which are major elements of the Medicare Hospital Outpatient Prospective Payment System (OPPS) and the Ambulatory Surgical Center (ASC) payment system; and supervision of hospital outpatient therapeutic services. The advice provided by the Panel will be considered as we prepare the annual update for the OPPS.

DATES:

Meeting Dates: The virtual meeting of the Panel is scheduled for Monday, August 22, 2022 from 9:30 a.m. to 5:00 p.m. Eastern Daylight Time (EDT) and Tuesday, August 23, 2002 from 9:30 a.m. to 5:00 p.m. EDT. The times listed in this notice are EDT and are approximate times. Consequently, the meetings may last longer or be shorter than the times listed in this notice, but will not begin before the posted time.

Deadline for presentations and comments: Presentations or comment letters must be received by 5:00 p.m. EDT on Friday, August 05, 2022. Presentations or comment letters must be submitted through the ''Hospital Outpatient Payment (HOP) Panel Meeting Presentation & Comment Letters'' module. To access the module, go to *https://mearis.cms.gov* to register/log in, and submit your presentation or comment letter. CMS can only accept HOP Panel Meeting presentations and comment letters that are submitted via MEARIS™. We note that with the submissions in MEARIS, CMS no longer requires the completion or submission of form CMS–20017 as part of the presentation or comment letter package. Submitters do not need to complete this form.

Presentations and comment letters that are not received by the due date and time will be considered late or incomplete and will not be included on the agenda.

Presentations and comment letters may not be revised once they are submitted. If a presentation or comment letter requires changes, a new submittal must be submitted by August 05, 2022.

ADDRESSES:

Virtual meeting location and webinar: The public may participate in this meeting via webinar, or listen-only via teleconference. Closed captioning will be available on the webinar. Teleconference dial-in and webinar information will appear on the final meeting agenda, which will be posted on our website when available at: *https://www.cms.gov/Regulations-and-Guidance/Guidance/FACA/AdvisoryPanelonAmbulatoryPaymentClassificationGroups.*

Advisory committee information line: The telephone number for the Advisory Panel on Hospital Outpatient Payment Committee Hotline is (410) 786–3985.

Websites: For additional information on the Panel, including the Panel charter, and updates to the Panel's activities, we refer readers to view our website at: *https://www.cms.gov/Regulations-and-Guidance/Guidance/FACA/AdvisoryPanelonAmbulatoryPaymentClassificationGroups.* Information about the Panel and its membership in the Federal Advisory Committee Act database are located at: *https://www.facadatabase.gov.*

Virtual meeting registration: While there is no meeting registration, presenters must be identified and included as part of the MEARIS™ presentation submission process by the deadline specified above. We note that no advanced registration is required for participants who plan to view the Panel meeting via webinar, listen via teleconference, or may wish to make a public comment during the meeting.

FOR FURTHER INFORMATION CONTACT: Nicole Marcos, Designated Federal Official (DFO) by email at: *APCPanel@cms.hhs.gov.*

Press inquiries are handled through the CMS Press Office at (202) 690–6145.

SUPPLEMENTARY INFORMATION:

I. Background

The Secretary of the Department of Health and Human Services (the Secretary) is required by section 1833(t)(9)(A) of the Social Security Act (the Act) and is allowed by section 222 of the Public Health Service Act to consult with an expert outside panel, such as the Advisory Panel on Hospital Outpatient Payment (the Panel), regarding the clinical integrity of the Ambulatory Payment Classification (APC) groups and relative payment weights. The Panel is governed by the provisions of the Federal Advisory Committee Act (Pub. L. 92–463), as amended (5 U.S.C. Appendix 2), to set forth standards for the formation and use of advisory panels. We consider the technical advice provided by the Panel as we prepare the proposed and final rules to update the Hospital Outpatient Prospective Payment System (OPPS) for the following calendar year (CY).

The Panel presently consists of members and a Chair named below.

- E.L. Hambrick, M.D., J.D., CMS Chairperson
- Terry Bohlke, C.P.A., C.M.A, M.H.A., C.A.S.C
- Carmen Cooper-Oguz, P.T., D.P.T, M.B.A, C.W.S, W.C.C
- Paul Courtney, M.D.
- Peter Duffy, M.D.
- Lisa Gangarosa, M.D.
- Bo Gately, M.B.A.
- Michael Kuettel, M.D., M.B.A, Ph.D.
- Scott Manaker, M.D., Ph.D.
- Brian Nester, D.O., M.B.A.
- Matthew Wheatley, M.D., F.A.C.E.P.

II. Annual Advisory Panel Meeting

A. Meeting Agenda

The agenda for the August 22, 2022 through August 23, 2022 virtual Panel meeting will provide for discussion and comment on the following topics as designated in the Panel's Charter:

- Addressing whether procedures within an APC group are similar both clinically and in terms of resource use.
- Reconfiguring APCs.
- Evaluating APC group weights.
- Reviewing packaging the cost of items and services, including drugs and devices, into procedures and services, including the methodology for packaging and the impact of packaging the cost of those items and services on APC group structure and payment.
- Removing procedures from the inpatient only list for payment under the OPPS.
- Using claims and cost report data for the Centers for Medicare & Medicaid Services' (CMS) determination of APC group costs.

- Addressing other technical issues concerning APC group structure.
- Evaluating the required level of supervision for hospital outpatient services.
- OPPS APC rates for covered Ambulatory Surgical Center (ASC) procedures.

The Agenda will be posted on the CMS website at: *https://www.cms.gov/Regulations-and-Guidance/Guidance/FACA/AdvisoryPanelonAmbulatoryPaymentClassificationGroups* approximately 1 week before the meeting.

B. Meeting Information Updates

The actual meeting hours and days will be posted in the agenda. As information and updates regarding this webinar and listen-only teleconference, including the agenda, become available, they will be posted to our website at: *https://www.cms.gov/Regulations-and-Guidance/Guidance/FACA/AdvisoryPanelonAmbulatoryPaymentClassificationGroups.*

C. Presentations and Comment Letters

The subject matter of any presentation and comment letter must be within the scope of the Panel as designated in the Charter. Any presentations or comments outside of the scope of the Panel will be returned or requested for amendment. Unrelated topics include, but are not limited to: the conversion factor; charge compression; revisions to the cost report; pass-through payments; correct coding; new technology applications (including supporting information/documentation); provider payment adjustments; supervision of hospital outpatient diagnostic services; and the types of practitioners that are permitted to supervise hospital outpatient services. The Panel may not recommend that services be designated as nonsurgical extended duration therapeutic services. Presentations or comment letters that address OPPS APC rates as they relate to covered ASC procedures are within the scope of the Panel; however, ASC payment rates, ASC payment indicators, the ASC covered procedures list, or other ASC payment system matters will be considered out of scope. The Panel may use data collected or developed by entities and organizations other than the Department of Health and Human Services or CMS in conducting its review. We recommend organizations submit data for CMS staff and the Panel's review. All presentations are limited to 5 minutes, regardless of the number of individuals or organizations represented by a single presentation. Presenters may use their 5 minutes to represent either one or more agenda items.

Section 508 Compliance

For this meeting, we are aiming to have all presentations and comment letters available on our website. Materials on our website must be Section 508 compliant to ensure access to federal employees and members of the public with and without disabilities. Presenters and commenters should reference the guidance on making documents section 508 compliant as they draft their submissions, and, whenever possible, submit their presentations and comment letters in a 508 compliant form. The section 508 guidance is available at: *https://www.cms.gov/research-statistics-data-and-systems/cms-information-technology/section508*. Presentations and comment letters should limit the use of graphs or pictures. Any use of these visual depictions must include alternate text that verbally describes what these visuals convey.

We will review presentations and comment letters for section 508 compliance and place compliant materials on our website. As resources permit, we will also convert non-compliant submissions to section 508-compliant forms and offer assistance to submitters who are making their submissions section 508-compliant. All section 508-compliant presentations and comment letters will be made available on the CMS website. If difficulties are encountered accessing the materials, contact the Designated Federal Official (DFO) in the **FOR FURTHER INFORMATION CONTACT** section of this notice.

D. Formal Presentations

In addition to formal presentations (limited to 5 minutes total per presentation), there will be an opportunity during the meeting for public comments as time permits (limited to 1 minute for each individual and a total of 3 minutes per organization).

E. Panel Recommendations and Discussions

The Panel's recommendations at any Panel meeting generally are not final until they have been reviewed and approved by the Panel on the last day of the meeting, before the final adjournment. These recommendations will be posted on the CMS website after the meeting.

F. Membership Appointments to the Advisory Panel on Hospital Outpatient Payment

The Panel Charter provides that the Panel shall meet up to 3 times annually. We consider the technical advice provided by the Panel as we prepare the proposed and final rules to update the OPPS for the following CY. The Panel shall consist of a chair and up to 15 members who are full-time employees of hospitals, hospital systems, or other Medicare providers that are subject to the OPPS. The

The Panel may also include a representative of a provider with ASC expertise, who shall advise CMS only on OPPS APC rates, as appropriate, impacting ASC covered procedures within the context and purview of the panel's scope. The Secretary or a designee selects the Panel membership based upon either self nominations or nominations submitted by Medicare providers and other interested organizations of candidates determined to have the required expertise. For supervision deliberations, the Panel may include members that represent the interests of Critical Access Hospitals, who advise CMS only regarding the level of supervision for hospital outpatient therapeutic services. New appointments are made in a manner that ensures a balanced membership under the Federal Advisory Committee Act guidelines. The Secretary rechartered the Panel in 2020 for a 2-year period effective through November 20, 2022. The current charter is available on the CMS website at: *https://www.cms.gov/files/document/2020-hop-panel-charter.pdf.*

III. Collection of Information Requirements

This document does not impose information collection requirements, that is, reporting, recordkeeping or third-party disclosure requirements. Consequently, there is no need for review by the Office of Management and Budget under the authority of the Paperwork Reduction Act of 1995 (44 U.S.C. 3501 *et seq.*).

The Administrator of the Centers for Medicare & Medicaid Services (CMS), Chiquita Brooks-LaSure, having reviewed and approved this document, authorizes Vanessa Garcia, who is the Federal Register Liaison, to electronically sign this document for

purposes of publication in the **Federal Register**.

Vanessa Garcia,

Federal Register Liaison, Centers for Medicare & Medicaid Services.

[FR Doc. 2022–15623 Filed 7–21–22; 8:45 am]

BILLING CODE 4120–01–P

DEPARTMENT OF HEALTH AND HUMAN SERVICES

Administration for Children and Families

Proposed Information Collection Activity; Office of Community Services (OCS) Community Economic Development (CED) Standard Reporting Format (Office of Management and Budget) (OMB) #0970–0386)

AGENCY: OCS, Administration for Children and Families (ACF), U.S. Department of Health and Human Services (HHS).

ACTION: Request for public comments.

SUMMARY: OCS is requesting a three-year extension of the semi-annual reporting format for CED grant recipients, the Performance Progress Report (PPR), which collects information regarding the outcomes and management of CED projects (OMB #0970–0386, expiration February 28, 2023). There are minor changes requested to the form to provide clarity to users completing the form.

DATES: *Comments due within 60 days of publication.* In compliance with the requirements of the Paperwork Reduction Act (PRA) of 1995, ACF is soliciting public comment on the specific aspects of the information collection described above.

ADDRESSES: You can obtain copies of the proposed collection of information and submit comments by emailing *infocollection@acf.hhs.gov.* Identify all requests by the title of the information collection.

SUPPLEMENTARY INFORMATION: *Description:* OCS will continue collecting key information about projects funded through the CED program. The legislative requirement for this program is in Title IV of the Community Opportunities, Accountability and Training and Educational Services Act (COATS Human Services Reauthorization Act) of October 27, 1998, Public Law 105–285, section 680(b) as amended. The PPR collects information regarding the outcomes and management of CED projects. OCS will use the data to critically review the overall design and effectiveness of the program.

The PPR will continue to be administered to all active grant recipients of the CED program. Grant recipients will be required to use this reporting tool for their semi-annual reports to be submitted twice a year. Through a previous renewal, the current PPR replaced both the annual questionnaire and other semi-annual reporting formats, which resulted in an overall reduction in burden for the grant recipients, significantly improved the quality of the data collected by OCS, and allowed grant recipients to become accustomed to this format. OCS seeks to renew this PPR to continue to collect quality data from grant recipients. To ensure the burden on grant recipients is not increased, but that the information collected demonstrates the full impact of the program, OCS has conducted an in-depth review of the forms and requests minor changes to the PPR to provide clarity to users filling out the form.

Respondents: Active CED Grant Recipients.

ANNUAL BURDEN ESTIMATES

Instrument	Total number of respondents	Annual number of responses per respondent	Average burden hours per response	Annual burden hours
PPR for Current OCS–CED Grant Recipients	91	2	1.5	273

Estimated Total Annual Burden Hours: 273.

Comments: The Department specifically requests comments on (a) whether the proposed collection of information is necessary for the proper performance of the functions of the agency, including whether the information shall have practical utility; (b) the accuracy of the agency's estimate of the burden of the proposed collection of information; (c) the quality, utility, and clarity of the information to be collected; and (d) ways to minimize the burden of the collection of information on respondents, including through the use of automated collection techniques or other forms of information technology. Consideration will be given to comments and suggestions submitted within 60 days of this publication.

Authority: Section 680(a)(2) of the Community Services Block Grant (CSBG) Act, 42 U.S.C. 9921.

Mary B. Jones,

ACF/OPRE Certifying Officer.

[FR Doc. 2022–15615 Filed 7–21–22; 8:45 am]

BILLING CODE 4184–24–P

DEPARTMENT OF HEALTH AND HUMAN SERVICES

Food and Drug Administration

[Docket No. FDA–2022–D–0823]

Real-Time Oncology Review; Draft Guidance for Industry; Availability

AGENCY: Food and Drug Administration, HHS.

ACTION: Notice of availability.

SUMMARY: The Food and Drug Administration (FDA or Agency) is announcing the availability of a draft guidance for industry entitled ''Real-Time Oncology Review (RTOR).'' The purpose of this guidance is to provide recommendations to applicants on the process for submission of selected new drug applications (NDAs) and biologics license applications (BLAs) with oncology indications for review under RTOR.

DATES: Submit either electronic or written comments on the draft guidance by September 20, 2022 to ensure that the Agency considers your comment on this draft guidance before it begins work on the final version of the guidance.

ADDRESSES: You may submit comments on any guidance at any time as follows:

Electronic Submissions

Submit electronic comments in the following way:

- *Federal eRulemaking Portal: https://www.regulations.gov.* Follow the instructions for submitting comments. Comments submitted electronically,

including attachments, to *https://www.regulations.gov* will be posted to the docket unchanged. Because your comment will be made public, you are solely responsible for ensuring that your comment does not include any confidential information that you or a third party may not wish to be posted, such as medical information, your or anyone else's Social Security number, or confidential business information, such as a manufacturing process. Please note that if you include your name, contact information, or other information that identifies you in the body of your comments, that information will be posted on *https://www.regulations.gov.*

• If you want to submit a comment with confidential information that you do not wish to be made available to the public, submit the comment as a written/paper submission and in the manner detailed (see ''Written/Paper Submissions'' and ''Instructions'').

Written/Paper Submissions

Submit written/paper submissions as follows:

• *Mail/Hand Delivery/Courier (for written/paper submissions):* Dockets Management Staff (HFA–305), Food and Drug Administration, 5630 Fishers Lane, Rm. 1061, Rockville, MD 20852.

• For written/paper comments submitted to the Dockets Management Staff, FDA will post your comment, as well as any attachments, except for information submitted, marked and identified, as confidential, if submitted as detailed in ''Instructions.''

Instructions: All submissions received must include the Docket No. FDA–2022–D–0823 for ''Real-Time Oncology Review.'' Received comments will be placed in the docket and, except for those submitted as ''Confidential Submissions,'' publicly viewable at *https://www.regulations.gov* or at the Dockets Management Staff between 9 a.m. and 4 p.m., Monday through Friday, 240–402–7500.

• Confidential Submissions—To submit a comment with confidential information that you do not wish to be made publicly available, submit your comments only as a written/paper submission. You should submit two copies total. One copy will include the information you claim to be confidential with a heading or cover note that states ''THIS DOCUMENT CONTAINS CONFIDENTIAL INFORMATION.'' The Agency will review this copy, including the claimed confidential information, in its consideration of comments. The second copy, which will have the claimed confidential information redacted/blacked out, will be available for public viewing and posted on *https://www.regulations.gov.* Submit both copies to the Dockets Management Staff. If you do not wish your name and contact information to be made publicly available, you can provide this information on the cover sheet and not in the body of your comments and you must identify this information as ''confidential.'' Any information marked as ''confidential'' will not be disclosed except in accordance with 21 CFR 10.20 and other applicable disclosure law. For more information about FDA's posting of comments to public dockets, see 80 FR 56469, September 18, 2015, or access the information at: *https://www.govinfo.gov/content/pkg/FR-2015-09-18/pdf/2015-23389.pdf.*

Docket: For access to the docket to read background documents or the electronic and written/paper comments received, go to *https://www.regulations.gov* and insert the docket number, found in brackets in the heading of this document, into the ''Search'' box and follow the prompts and/or go to the Dockets Management Staff, 5630 Fishers Lane, Rm. 1061, Rockville, MD 20852, 240–402–7500.

You may submit comments on any guidance at any time (see 21 CFR 10.115(g)(5)).

Submit written requests for single copies of the draft guidance to the Division of Drug Information, Center for Drug Evaluation and Research, Food and Drug Administration, 10001 New Hampshire Ave., Hillandale Building, 4th Floor, Silver Spring, MD 20993–0002; or to the Office of Communication, Outreach and Development, Center for Biologics Evaluation and Research, Food and Drug Administration, 10903 New Hampshire Ave., Bldg. 71, Rm. 3128, Silver Spring, MD 20993–0002. Send one self-addressed adhesive label to assist that office in processing your requests. See the **SUPPLEMENTARY INFORMATION** section for electronic access to the draft guidance document.

FOR FURTHER INFORMATION CONTACT: R. Angelo De Claro, Oncology Center of Excellence, Food and Drug Administration, 10903 New Hampshire Ave., Bldg. 22, Rm. 2173, Silver Spring, MD 20993, 301–796–4415; or Stephen Ripley, Center for Biologics Evaluation and Research, Food and Drug Administration, 10903 New Hampshire Ave., Bldg. 71, Rm. 7301, Silver Spring, MD 20993, 240–402–7911.

SUPPLEMENTARY INFORMATION:

I. Background

FDA is announcing the availability of a draft guidance for industry entitled ''Real-Time Oncology Review.'' The purpose of this guidance is to provide recommendations to applicants on the process for submission of selected NDAs and BLAs with oncology indications for review under RTOR.

The FDA Oncology Center of Excellence, in collaboration with the Office of Oncologic Diseases, commenced the RTOR program in February 2018 to facilitate earlier submission of topline results (*i.e.,* efficacy and safety results from clinical studies before the study report is completed) and datasets, after database lock, to support an earlier start to the FDA application review. The intent of RTOR is to provide FDA reviewers earlier access to data, to identify data quality and potential review issues, and potentially provide early feedback to the applicant, which can allow for a more streamlined and efficient review process. RTOR also involves early engagement with the applicant to discuss the submission timelines for RTOR components and the full application submission. RTOR does not alter the review performance goals and timelines associated with the applications, including those described in the Prescription Drug User Fee Amendments. Participation by the applicant is voluntary and acceptance into the program does not guarantee or influence approval of the application, which is subject to the same statutory and regulatory requirements for approval as applications that are not included in RTOR.

This draft guidance is being issued consistent with FDA's good guidance practices regulation (21 CFR 10.115). The draft guidance, when finalized, will represent the current thinking of FDA on ''Real-Time Oncology Review.'' It does not establish any rights for any person and is not binding on FDA or the public. You can use an alternative approach if it satisfies the requirements of the applicable statutes and regulations.

II. Paperwork Reduction Act of 1995

While this guidance contains no collection of information, it does refer to previously approved FDA collections of information. Therefore, clearance by the Office of Management and Budget (OMB) under the Paperwork Reduction Act of 1995 (PRA) (44 U.S.C. 3501–3521) is not required for this guidance. The previously approved collections of information are subject to review by OMB under the PRA. The collections of information in 21 CFR part 312 have been approved under OMB control number 0910–0014; the collections of information in 21 CFR part 314 have been approved under OMB control

number 0910–0001; and the collections of information in 21 CFR part 601 have been approved under OMB control number 0910–0338.

III. Electronic Access

Persons with access to the internet may obtain the guidance at *https://www.fda.gov/drugs/guidance-compliance-regulatory-information/guidances-drugs, https://www.fda.gov/vaccines-blood-biologics/guidance-compliance-regulatory-information-biologics/biologics-guidances, https://www.fda.gov/regulatory-information/search-fda-guidance-documents,* or *https://www.regulations.gov.*

Dated: July 18, 2022.

Lauren K. Roth,

Associate Commissioner for Policy.

[FR Doc. 2022–15676 Filed 7–21–22; 8:45 am]

BILLING CODE 4164–01–P

DEPARTMENT OF HEALTH AND HUMAN SERVICES

Food and Drug Administration

[Docket No. FDA–2021–N–1252]

Panray Corp. Sub Ormont Drug and Chemical Co., Inc., et al.; Withdrawal of Approval of Three New Drug Applications

AGENCY: Food and Drug Administration, HHS.

ACTION: Notice.

SUMMARY: The Food and Drug Administration (FDA) is withdrawing approval of three new drug applications (NDAs) from multiple holders of those NDAs. The basis for the withdrawal is that these NDA holders have repeatedly failed to file required annual reports for the identified NDAs.

DATES: Approval is withdrawn as of July 22, 2022.

FOR FURTHER INFORMATION CONTACT: Kimberly Lehrfeld, Center for Drug Evaluation and Research, Food and Drug Administration, 10903 New Hampshire Ave., Bldg. 51, Rm. 6226, Silver Spring, MD 20993–0002, 301–796–3137, *Kimberly.Lehrfeld@fda.hhs.gov.*

SUPPLEMENTARY INFORMATION: The holder of an approved application to market a new drug for human use is required to submit annual reports to FDA concerning its approved application in accordance with § 314.81 (21 CFR 314.81).

In the **Federal Register** of December 27, 2021 (86 FR 73296), FDA published a notice offering an opportunity for a hearing (NOOH) on a proposal to withdraw approval of three NDAs because the holders of those NDAs had repeatedly failed to submit the required annual reports for those NDAs. The holders of those NDAs did not respond to the NOOH. Failure to file a written notice of participation and request for hearing as required by § 314.200 (21 CFR 314.200) constitutes an election by those holders of the NDAs not to make use of the opportunity for a hearing concerning the proposal to withdraw approval of their NDAs and a waiver of any contentions concerning the legal status of the drug products. Therefore, FDA is withdrawing approval of the three applications listed in table 1 of this document.

TABLE 1—APPROVED NDAS FOR WHICH REQUIRED REPORTS HAVE NOT BEEN SUBMITTED

Application No.	Drug	NDA holder
NDA 008284	Cortisone Acetate Tablets, 5 milligrams (mg) and 25 mg	Panray Corp. Sub Ormont Drug and Chemical Co., Inc., 520 South Dean St., Englewood, NJ 07631.
NDA 009659	Hydrocortisone Tablets, 10 mg and 20 mg	Do.
NDA 019503	Triamcinolone Acetonide Suspension, 3 mg/milliliters (mL)	Parnell Pharmaceuticals Inc., 111 Francisco Blvd., San Rafael, CA 94901.

FDA finds that the holders of the NDAs listed in table 1 have repeatedly failed to submit reports required by § 314.81. In addition, under § 314.200, FDA finds that the holders of the NDAs have waived any contentions concerning the legal status of the drug products. Therefore, under these findings, approval of the NDAs listed in table 1 and all amendments and supplements thereto is hereby withdrawn as of July 22, 2022.

Dated: July 14, 2022.

Lauren K. Roth,

Associate Commissioner for Policy.

[FR Doc. 2022–15629 Filed 7–21–22; 8:45 am]

BILLING CODE 4164–01–P

DEPARTMENT OF HEALTH AND HUMAN SERVICES

Food and Drug Administration

[Docket No. FDA–2010–N–0414]

Agency Information Collection Activities; Submission for Office of Management and Budget Review; Comment Request; Manufactured Food Regulatory Program Standards

AGENCY: Food and Drug Administration, HHS.

ACTION: Notice.

SUMMARY: The Food and Drug Administration (FDA or we) is announcing that a proposed collection of information has been submitted to the Office of Management and Budget (OMB) for review and clearance under the Paperwork Reduction Act of 1995.

DATES: Submit written comments (including recommendations) on the collection of information by August 22, 2022.

ADDRESSES: To ensure that comments on the information collection are received, OMB recommends that written comments be submitted to *https://www.reginfo.gov/public/do/PRAMain.* Find this particular information collection by selecting ''Currently under Review—Open for Public Comments'' or by using the search function. The OMB control number for this information collection is 0910–0601. Also include the FDA docket number found in brackets in the heading of this document.

FOR FURTHER INFORMATION CONTACT: Rachel Showalter, Office of Operations, Food and Drug Administration, Three White Flint North, 10A–12M, 11601 Landsdown St., North Bethesda, MD 20852, 240–994–7399, *PRAStaff@fda.hhs.gov.*

SUPPLEMENTARY INFORMATION: In compliance with 44 U.S.C. 3507, FDA has submitted the following proposed collection of information to OMB for review and clearance.

Manufactured Food Regulatory Program Standards

OMB Control Number 0910–0601—Revision

This information collection supports the FDA's ''Manufactured Food Regulatory Program Standards'' (2019) (*https://www.fda.gov/media/131392/download*). We recommend that States use these program standards as the framework to design and manage their manufactured food programs. There are 44 State programs enrolled in the Manufactured Food Regulatory Program Standards (MFRPS or the program standards) under cooperative agreements.

The goal of the MFRPS is to implement a nationally integrated, risk-based, food safety system focused on protecting public health. The MFRPS establish a uniform basis for measuring and improving the performance of prevention, intervention, and response activities of manufactured food regulatory programs in the United States. The development and implementation of the standards will help Federal and State programs better direct their regulatory activities toward reducing foodborne illness. For more information, and to access the program standards, we invite you to visit our website at: *https://www.fda.gov/federal-state-local-tribal-and-territorial-officials/regulatory-program-standards/manufactured-food-regulatory-program-standards-mfrps.*

FDA recommends that a State program enrolled in the MFRPS use the worksheets and forms contained in the standards; however, alternate forms that are equivalent may be used. The State program maintains documentation (guidance, procedures, documents, and forms) required by the 10 standards, which must be current and fit for use. In the first year of implementing the program standards, the State program conducts a baseline self-assessment of the documentation to determine if it meets the elements of each standard. The State program must participate in additional verification audits in subsequent years. After 5 years, FDA will conduct a comprehensive program audit of the documentation. As part of the program audit, the auditor reviews the records and supporting documents required by the criteria in each standard to determine if the self-assessment and improvement plan accurately reflect the State program's level of conformance with each of the standards. If the State program fails to meet all program elements and documentation requirements of a standard, it develops a strategic plan which includes the following: (1) the individual element of documentation requirement of the standard that was not met, (2) improvements needed to meet the program element or documentation requirement of the standard, and (3) projected completion dates for each task.

In the **Federal Register** of January 13, 2022 (87 FR 2162), FDA published a 60-day notice requesting public comment on the proposed collection of information. No comments were received.

Subsequent to the publication of the 60-day notice, in collaboration with the State Governments, FDA completed a revision of the program standards. In an effort to improve program effectiveness, understanding and clarity, changes include those to program definitions, inspection procedures, appendices and assessment worksheets that may be used by the States who have adopted the MFRPS. A copy of the revised program standards is available in the docket.

The revised program standards are the result of external collaboration and coordination between FDA and the Association of Food and Drug Officials Manufactured Food Regulatory Program Alliance and the Partnership for Food Protection Governing Council. We consider any formal comments received on the previous edition of the program standards and feedback obtained from our collaboration with the States.

Description of Respondents: Respondents are State Departments of Agriculture or Health enrolled in the MFRPS (State Governments).

FDA estimates the burden of this collection of information as follows:

TABLE 1—ESTIMATED ANNUAL REPORTING BURDEN [1]

Type of respondent; activity	Number of respondents	Number of responses per respondent	Total annual responses	Average burden per response	Total hours
State Governments; Development and reporting of data consistent with MFRPS	44	1	44	569	25,036

[1] There are no capital costs or operating and maintenance costs associated with this collection of information.

TABLE 2—ESTIMATED ANNUAL RECORDKEEPING BURDEN [1]

Type of respondent; activity	Number of recordkeepers	Number of records per recordkeeper	Total annual records	Average burden per recordkeeping	Total hours
State Governments; Maintenance of data records consistent with MFRPS	44	10	440	40	17,600

[1] There are no capital costs or operating and maintenance costs associated with this collection of information.

We have adjusted the number of respondents to the information collection to reflect the enrollment of an additional State since our last evaluation.

Dated: July 18, 2022.

Lauren K. Roth,

Associate Commissioner for Policy.

[FR Doc. 2022–15737 Filed 7–21–22; 8:45 am]

BILLING CODE 4164–01–P

DEPARTMENT OF HEALTH AND HUMAN SERVICES

Food and Drug Administration

[Docket No. FDA–2020–E–2203]

Determination of Regulatory Review Period for Purposes of Patent Extension; TAUVID

AGENCY: Food and Drug Administration, HHS.

ACTION: Notice.

SUMMARY: The Food and Drug Administration (FDA or the Agency) has determined the regulatory review period for TAUVID and is publishing this notice of that determination as required by law. FDA has made the determination because of the submission of an application to the Director of the U.S. Patent and Trademark Office (USPTO), Department of Commerce, for the extension of a patent which claims that human drug product.

DATES: Anyone with knowledge that any of the dates as published (see **SUPPLEMENTARY INFORMATION**) are incorrect may submit either electronic or written comments and ask for a redetermination by September 20, 2022. Furthermore, any interested person may petition FDA for a determination regarding whether the applicant for extension acted with due diligence during the regulatory review period by January 18, 2023. See ''Petitions'' in the **SUPPLEMENTARY INFORMATION** section for more information.

ADDRESSES: You may submit comments as follows. Please note that late, untimely filed comments will not be considered. Electronic comments must be submitted on or before September 20, 2022. The *https://www.regulations.gov* electronic filing system will accept comments until 11:59 p.m. Eastern Time at the end of September 20, 2022. Comments received by mail/hand delivery/courier (for written/paper submissions) will be considered timely if they are postmarked or the delivery service acceptance receipt is on or before that date.

Electronic Submissions

Submit electronic comments in the following way:

- *Federal eRulemaking Portal: https://www.regulations.gov.* Follow the instructions for submitting comments. Comments submitted electronically, including attachments, to *https://www.regulations.gov* will be posted to the docket unchanged. Because your comment will be made public, you are solely responsible for ensuring that your comment does not include any confidential information that you or a third party may not wish to be posted, such as medical information, your or anyone else's Social Security number, or confidential business information, such as a manufacturing process. Please note that if you include your name, contact information, or other information that identifies you in the body of your comments, that information will be posted on *https://www.regulations.gov.*
- If you want to submit a comment with confidential information that you do not wish to be made available to the public, submit the comment as a written/paper submission and in the manner detailed (see ''Written/Paper Submissions'' and ''Instructions'').

Written/Paper Submissions

Submit written/paper submissions as follows:

- *Mail/Hand Delivery/Courier (for written/paper submissions):* Dockets Management Staff (HFA–305), Food and Drug Administration, 5630 Fishers Lane, Rm. 1061, Rockville, MD 20852.
- For written/paper comments submitted to the Dockets Management Staff, FDA will post your comment, as well as any attachments, except for information submitted, marked and identified, as confidential, if submitted as detailed in ''Instructions.''

Instructions: All submissions received must include the Docket No. FDA–2020–E–2203 for ''Determination of Regulatory Review Period for Purposes of Patent Extension; TAUVID.'' Received comments, those filed in a timely manner (see **ADDRESSES**), will be placed in the docket and, except for those submitted as ''Confidential Submissions,'' publicly viewable at *https://www.regulations.gov* or at the Dockets Management Staff between 9 a.m. and 4 p.m., Monday through Friday, 240–402–7500.

- Confidential Submissions—To submit a comment with confidential information that you do not wish to be made publicly available, submit your comments only as a written/paper submission. You should submit two copies total. One copy will include the information you claim to be confidential with a heading or cover note that states ''THIS DOCUMENT CONTAINS CONFIDENTIAL INFORMATION.'' The Agency will review this copy, including the claimed confidential information, in its consideration of comments. The second copy, which will have the claimed confidential information redacted/blacked out, will be available for public viewing and posted on *https://www.regulations.gov.* Submit both copies to the Dockets Management Staff. If you do not wish your name and contact information to be made publicly available, you can provide this information on the cover sheet and not in the body of your comments and you must identify this information as ''confidential.'' Any information marked as ''confidential'' will not be disclosed except in accordance with § 10.20 (21 CFR 10.20) and other applicable disclosure law. For more information about FDA's posting of comments to public dockets, see 80 FR 56469, September 18, 2015, or access the information at: *https://www.govinfo.gov/content/pkg/FR-2015-09-18/pdf/2015-23389.pdf.*

Docket: For access to the docket to read background documents or the electronic and written/paper comments received, go to *https://www.regulations.gov* and insert the docket number, found in brackets in the heading of this document, into the ''Search'' box and follow the prompts and/or go to the Dockets Management Staff, 5630 Fishers Lane, Rm. 1061, Rockville, MD 20852, 240–402–7500.

FOR FURTHER INFORMATION CONTACT: Beverly Friedman, Office of Regulatory Policy, Food and Drug Administration, 10903 New Hampshire Ave., Bldg. 51, Rm. 6250, Silver Spring, MD 20993, 301–796–3600.

SUPPLEMENTARY INFORMATION:

I. Background

The Drug Price Competition and Patent Term Restoration Act of 1984 (Pub. L. 98–417) and the Generic Animal Drug and Patent Term Restoration Act (Pub. L. 100–670) generally provide that a patent may be extended for a period of up to 5 years so long as the patented item (human drug or biologic product, animal drug product, medical device, food additive, or color additive) was subject to regulatory review by FDA before the item was marketed. Under these acts, a product's regulatory review period forms the basis for determining the amount of extension an applicant may receive.

A regulatory review period consists of two periods of time: a testing phase and an approval phase. For human drug products, the testing phase begins when the exemption to permit the clinical investigations of the drug becomes effective and runs until the approval phase begins. The approval phase starts with the initial submission of an application to market the human drug product and continues until FDA grants permission to market the drug product. Although only a portion of a regulatory review period may count toward the actual amount of extension that the Director of USPTO may award (for example, half the testing phase must be subtracted as well as any time that may have occurred before the patent was issued), FDA's determination of the length of a regulatory review period for a human drug product will include all of the testing phase and approval phase as specified in 35 U.S.C. 156(g)(1)(B).

FDA has approved for marketing the human drug product, TAUVID (flortaucipir F–18). TAUVID is indicated for positron emission tomography imaging of the brain to estimate the density and distribution of aggregated tau neurofibrillary tangles in adult patients with cognitive impairment who are being evaluated for Alzheimer's disease. Subsequent to this approval, the USPTO received a patent term restoration application for TAUVID (U.S. Patent No. 8,932,557) from Eli Lilly and Company, and the USPTO requested FDA's assistance in determining the patent's eligibility for patent term restoration. In a letter dated December 14, 2020, FDA advised the USPTO that this human drug product had undergone a regulatory review period and that the approval of TAUVID represented the first permitted commercial marketing or use of the product. Thereafter, the USPTO requested that FDA determine the product's regulatory review period.

II. Determination of Regulatory Review Period

FDA has determined that the applicable regulatory review period for TAUVID is 3,067 days. Of this time, 2,825 days occurred during the testing phase of the regulatory review period, while 242 days occurred during the approval phase. These periods of time were derived from the following dates:

1. *The date an exemption under section 505(i) of the Federal Food, Drug, and Cosmetic Act (FD&C Act) (21 U.S.C. 355(i)) became effective:* January 6, 2012. FDA has verified the applicant's claim that the date the investigational new drug application became effective was on January 6, 2012.

2. *The date the application was initially submitted with respect to the human drug product under section 505 of the FD&C Act:* September 30, 2019. FDA has verified the applicant's claim that the new drug application (NDA) for TAUVID (NDA 212123) was initially submitted on September 30, 2019.

3. *The date the application was approved:* May 28, 2020. FDA has verified the applicant's claim that NDA 212123 was approved on May 28, 2020.

This determination of the regulatory review period establishes the maximum potential length of a patent extension. However, the USPTO applies several statutory limitations in its calculations of the actual period for patent extension. In its application for patent extension, this applicant seeks 1,102 days of patent term extension.

III. Petitions

Anyone with knowledge that any of the dates as published are incorrect may submit either electronic or written comments and, under 21 CFR 60.24, ask for a redetermination (see **DATES**). Furthermore, as specified in § 60.30 (21 CFR 60.30), any interested person may petition FDA for a determination regarding whether the applicant for extension acted with due diligence during the regulatory review period. To meet its burden, the petition must comply with all the requirements of § 60.30, including but not limited to: must be timely (see **DATES**), must be filed in accordance with § 10.20, must contain sufficient facts to merit an FDA investigation, and must certify that a true and complete copy of the petition has been served upon the patent applicant. (See H. Rept. 857, part 1, 98th Cong., 2d sess., pp. 41–42, 1984.) Petitions should be in the format specified in 21 CFR 10.30.

Submit petitions electronically to *https://www.regulations.gov* at Docket No. FDA–2013–S–0610. Submit written petitions (two copies are required) to the Dockets Management Staff (HFA–305), Food and Drug Administration, 5630 Fishers Lane, Rm. 1061, Rockville, MD 20852.

Dated: July 18, 2022.

Lauren K. Roth,

Associate Commissioner for Policy.

[FR Doc. 2022–15679 Filed 7–21–22; 8:45 am]

BILLING CODE 4164–01–P

DEPARTMENT OF HEALTH AND HUMAN SERVICES

Food and Drug Administration

[Docket No. FDA–2013–N–0377]

Agency Information Collection Activities; Submission for Office of Management and Budget Review; Comment Request; Tobacco Health Document Submission

AGENCY: Food and Drug Administration, Health and Human Services (HHS).

ACTION: Notice.

SUMMARY: The Food and Drug Administration (FDA, Agency, or we) is announcing that a proposed collection of information has been submitted to the Office of Management and Budget (OMB) for review and clearance under the Paperwork Reduction Act of 1995.

DATES: Submit written comments (including recommendations) on the collection of information by August 22, 2022.

ADDRESSES: To ensure that comments on the information collection are received, OMB recommends that written comments be submitted to *https://www.reginfo.gov/public/do/PRAMain*. Find this particular information collection by selecting ''Currently under Review—Open for Public Comments'' or by using the search function. The OMB control number for this information collection is 0910–0654. Also include the FDA docket number found in brackets in the heading of this document.

FOR FURTHER INFORMATION CONTACT: Rachel Showalter, Office of Operations, Food and Drug Administration, Three White Flint North, 10A–12M, 11601 Landsdown St., North Bethesda, MD 20852, 240–994–7399, *PRAStaff@fda.hhs.gov*.

SUPPLEMENTARY INFORMATION: In compliance with 44 U.S.C. 3507, FDA has submitted the following proposed collection of information to OMB for review and clearance.

Tobacco Health Document Submission

OMB Control Number 0910–0654—Revision

Section 904(a)(4) of the Federal Food, Drug, and Cosmetic Act (FD&C Act) (21 U.S.C. 387d(a)(4)) requires each tobacco product manufacturer or importer, or agent thereof, to submit all documents developed after June 22, 2009, ''that relate to health, toxicological, behavioral, or physiologic effects of current or future tobacco products, their constituents (including smoke

constituents), ingredients, components, and additives'' (herein referred to as ''tobacco health documents'' or ''health documents'').

The guidance document entitled ''Health Document Submission Requirements for Tobacco Products (Revised)'' (2017) (*https://www.fda.gov/regulatory-information/search-fda-guidance-documents/tobacco-health-document-submission*) requests tobacco health document submissions from manufacturers and importers of tobacco products based on statutory requirements and compliance dates.[1] As indicated in the guidance, all manufacturers and importers of tobacco products are now subject to the FD&C Act and are required to comply with section 904(a)(4) of the FD&C Act, which requires immediate and ongoing submission of health documents developed after June 22, 2009 (the date of enactment of the Tobacco Control Act). However, FDA generally does not intend to enforce the requirement at this time with respect to all such health documents, so long as a specified set of documents, those developed between June 23, 2009, and December 31, 2009, are provided at least 90 days prior to the delivery for introduction of tobacco products into interstate commerce. Thereafter, manufacturers should preserve all health documents, including those that relate to products for further manufacturing and those developed after December 31, 2009, for future submission to FDA. All Agency guidance documents are issued in accordance with our good guidance practice regulations in 21 CFR 10.115, which provide for public comment at any time.

FDA is planning revisions to the guidance to reflect that the deemed tobacco product compliance period has passed. Additional revisions include clarifying and editorial changes to promote a better understanding of FDA's interpretation of the ''health, toxicological, behavioral, or physiologic'' phrase, examples of health, toxicological, behavioral, or physiologic effects documents, and minor updates to the metadata list.

FDA has been collecting the information submitted pursuant to section 904(a)(4) of the FD&C Act through a facilitative electronic form and through a paper form (Form FDA 3743) for those individuals who choose not to use the electronic method. On both forms, FDA is requesting the following information from firms that have not already reported or still have documents to report:

- Submitter identification
- Submitter type, company name, address, country, company headquarters Dun and Bradstreet D–U–N–S number, and FDA assigned Facility Establishment Identifier (FEI) number
- Submitter point of contact
- Contact name, title, position title, email, telephone, and Fax
- Submission format and contents (as applicable)
- Electronic documents: media type, media quantity, size of submission, quantity of documents, file type, and file software
- Paper documents: quantity of documents, quantity of volumes, and quantity of boxes
- Whether or not a submission is being provided
- Confirmation statement
- Identification and signature of submitter including name, company name, address, position title, email, telephone, and Fax
- Document categorization (as applicable): relationship of the document or set of documents to the following:
  - Health, behavioral, toxicological, or physiological effects
  - Uniquely identified current or future tobacco product(s)
  - Category of current or future tobacco product(s)
  - Specific ingredient(s), constituent(s), component(s), or additive(s)
  - Class of ingredient(s), constituent(s), component(s), or additive(s)
- Document readability and accessibility: keywords; glossary or explanation of any abbreviations, jargon, or internal (*e.g.,* code) names; special instructions for loading or compiling submission.
- Document metadata: date document was created, document author(s), document recipient(s), document custodian, document title or identification number, beginning and ending Bates numbers, Bates number ranges for documents attached to a submitted email, document type, and whether the document is present in the University of California San Francisco's Truth Tobacco Documents database.

You may access the electronic form and paper form on our website, at *https://www.fda.gov/tobacco-products/manufacturing/submit-documents-ctp-portal* and *https://www.fda.gov/media/78652/download,* respectively. In addition to the electronic and paper forms, FDA issued the guidance on this collection to assist persons making tobacco health document submissions. For further assistance, FDA is providing a technical guide, embedded hints, and a web tutorial on the electronic portal.

FDA issued a final rule to deem products meeting the statutory definition of ''tobacco product'' to be subject to the FD&C Act on May 10, 2016 (81 FR 28973), which became effective on August 8, 2016. The FD&C Act provides FDA authority to regulate cigarettes, cigarette tobacco, roll-your-own tobacco (RYO), smokeless tobacco, and any other tobacco products that the Agency by regulation deems to be subject to the law. This final rule extended the Agency's ''tobacco product'' authorities to all other categories of products that meet the statutory definition of ''tobacco product'' in the FD&C Act, except accessories of such deemed tobacco products.

For tobacco products subject to the deeming rule, FDA understands ''current or future tobacco products'' to refer to products commercially distributed on or after August 8, 2016, or products in any stage of research or development at any time after August 8, 2016, including experimental products and developmental products intended for introduction into the market for consumer use. For cigarettes, cigarette tobacco, RYO, and smokeless tobacco, FDA understands ''current or future tobacco products'' to refer to products commercially distributed on or after June 23, 2009, or products in any stage of research or development at any time after June 23, 2009, including experimental products and developmental products intended for introduction into the market for consumer use.

In the guidance on this collection, FDA indicated our intent to enforce the requirement at this time with respect to all such health documents relating to the deemed tobacco products, so long as a specified set of documents, those developed between June 23, 2009, and December 31, 2009, were submitted by February 8, 2017, or in the case of small-scale deemed tobacco product manufacturers (small-scale manufacturers), by November 8, 2017 (81 FR 28973 at 29008 and 29009). Additionally, FDA extended the compliance deadlines by an additional 6 months for small-scale manufacturers in the areas impacted by natural disasters to May 8, 2018. Thereafter, FDA's compliance plan requested

[1] FDA announced the availability of a guidance on this collection in the **Federal Register** on April 20, 2010 (75 FR 20606) (revised December 5, 2016 (81 FR 87565)).

deemed manufacturers provide tobacco health document submissions from the specified period, at least 90 days prior to the delivery for introduction into interstate commerce of tobacco products to which the health documents relate. Manufacturers or importers of cigarettes, cigarette tobacco, RYO, or smokeless tobacco products must provide all health documents developed between June 23, 2009, and December 31, 2009, at least 90 days prior to the delivery for introduction of tobacco products into interstate commerce.

After publication of the 60-day notice however, on March 15, 2022, President Biden signed H.R. 2471—the Consolidated Appropriations Act, 2022. As a result, the FD&C Act now includes specific language that makes clear that FDA has the authority to regulate tobacco products containing nicotine from any source, which includes synthetic. On April 14, 2022, firms engaged in the manufacture, preparation, compounding, or processing of tobacco products containing non-tobacco nicotine products (NTN) must therefore provide health documents.

In the **Federal Register** of February 25, 2022 (87 FR 10800), FDA published a 60-day notice requesting public comment on the proposed collection of information. No comments were received.

FDA estimates the burden of this collection of information as follows:

TABLE 1—ESTIMATED ANNUAL REPORTING BURDEN [1]

Activity	Number of respondents	Number of responses per respondent	Total annual responses	Average burden per response	Total hours
Tobacco Health Document Submissions and Form FDA 3743	10	3.2	32	50	1,600
Tobacco Health Document Submissions and Form 3743 for Non-Tobacco Nicotine Products (NTN)	100	1	100	2	200
Total					1,800

The number of documents received each year since the original collection period has fallen to less than 5 percent of what was received in the original collection period. FDA expects this is because documents created within the specified period should have already been submitted. The Agency bases this estimate on the total number of tobacco firms it is aware of and its experience with document production and the number of additional documents that have been reported each year since the original estimate of the reporting burden.

FDA estimates that a tobacco health document submission as required by section 904(a)(4) of the FD&C Act, will take approximately 50 hours per submission based on FDA experience. To derive the number of respondents for this provision, FDA assumes that very few manufacturers or importers, or agents thereof, would have health documents to submit. We anticipate documents will be submitted on an annual basis for a total of 10 respondents. FDA estimates the annual reporting burden for these respondents to be 1,600 hours.

As mentioned previously in this document, with the new authority provided to FDA, firms engaged in the manufacture, preparation, compounding, or processing of tobacco products containing NTN must provide health documents. Although these firms are unlikely to have health documents created within the specified period, we are estimating for this extension that we will receive 100 new NTN respondents who will be required to provide a declaration to such effect via Form 3743, which is expected to take 2 hours, for a total 200 burden hours.

Based on a review of the information collection of our current OMB approval, we have increased the burden by 200 hours.

Dated: July 18, 2022.

Lauren K. Roth,

Associate Commissioner for Policy.

[FR Doc. 2022–15727 Filed 7–21–22; 8:45 am]

BILLING CODE 4164–01–P

DEPARTMENT OF HEALTH AND HUMAN SERVICES

Food and Drug Administration

[Docket No. FDA–2020–N–1584]

Authorization of Emergency Use of Certain Medical Devices During COVID–19; Availability

AGENCY: Food and Drug Administration, HHS.

ACTION: Notice.

SUMMARY: The Food and Drug Administration (FDA or Agency) is announcing the issuance of Emergency Use Authorizations (EUAs) (the Authorizations) for certain medical devices related to the Coronavirus Disease 2019 (COVID–19) public health emergency. FDA has issued the Authorizations listed in this document under the Federal Food, Drug, and Cosmetic Act (FD&C Act). These Authorizations contain, among other things, conditions on the emergency use of the authorized products. The Authorizations follow the February 4, 2020, determination by the Secretary of Health and Human Services (HHS) that there is a public health emergency that has a significant potential to affect national security or the health and security of U.S. citizens living abroad and that involves the virus that causes COVID–19, and the subsequent declarations on February 4, 2020, March 2, 2020, and March 24, 2020, that circumstances exist justifying the authorization of emergency use of in vitro diagnostics for detection and/or diagnosis of the virus that causes COVID–19, personal respiratory protective devices, and medical devices, including alternative products used as medical devices, respectively, subject to the terms of any authorization issued under the FD&C Act. These Authorizations, which include an explanation of the reasons for issuance, are listed in this document, and can be accessed on FDA's website from the links indicated.

DATES: These Authorizations are effective on their date of issuance.

ADDRESSES: Submit written requests for single copies of an EUA to the Office of Counterterrorism and Emerging Threats, Food and Drug Administration, 10903 New Hampshire Ave., Bldg. 1, Rm. 4338, Silver Spring, MD 20993–0002. Send one self-addressed adhesive label to assist that office in processing your request or include a Fax number to which the Authorization may be sent. See the **SUPPLEMENTARY INFORMATION**

section for electronic access to the Authorization.

FOR FURTHER INFORMATION CONTACT:

Jennifer J. Ross, Office of Counterterrorism and Emerging Threats, Food and Drug Administration, 10903 New Hampshire Ave., Bldg. 1, Rm. 4332, Silver Spring, MD 20993–0002, 301–796–8510 (this is not a toll-free number).

SUPPLEMENTARY INFORMATION:

I. Background

Section 564 of the FD&C Act (21 U.S.C. 360bbb–3) allows FDA to strengthen the public health protections against biological, chemical, radiological, or nuclear agent or agents. Among other things, section 564 of the FD&C Act allows FDA to authorize the use of an unapproved medical product or an unapproved use of an approved medical product in certain situations. With this EUA authority, FDA can help ensure that medical countermeasures may be used in emergencies to diagnose, treat, or prevent serious or life-threatening diseases or conditions caused by a biological, chemical, radiological, or nuclear agent or agents when there are no adequate, approved, and available alternatives.

Section 564(b)(1) of the FD&C Act provides that, before an EUA may be issued, the Secretary of HHS must declare that circumstances exist justifying the authorization based on one of the following grounds: (1) a determination by the Secretary of Homeland Security that there is a domestic emergency, or a significant potential for a domestic emergency, involving a heightened risk of attack with a biological, chemical, radiological, or nuclear agent or agents; (2) a determination by the Secretary of Defense that there is a military emergency, or a significant potential for a military emergency, involving a heightened risk to U.S. military forces, including personnel operating under the authority of title 10 or title 50 of the U.S. Code, of attack with (A) a biological, chemical, radiological, or nuclear agent or agents; or (B) an agent or agents that may cause, or are otherwise associated with, an imminently life-threatening and specific risk to U.S. military forces; [1] (3) a determination by the Secretary of HHS that there is a public health emergency, or a significant potential for a public health emergency, that affects, or has a significant potential to affect, national security or the health and security of U.S. citizens living abroad, and that involves a biological, chemical, radiological, or nuclear agent or agents, or a disease or condition that may be attributable to such agent or agents; or (4) the identification of a material threat by the Secretary of Homeland Security pursuant to section 319F–2 of the Public Health Service (PHS) Act (42 U.S.C. 247d–6b) sufficient to affect national security or the health and security of U.S. citizens living abroad.

Once the Secretary of HHS has declared that circumstances exist justifying an authorization under section 564 of the FD&C Act, FDA may authorize the emergency use of a drug, device, or biological product if the Agency concludes that the statutory criteria are satisfied. Under section 564(h)(1) of the FD&C Act, FDA is required to publish in the **Federal Register** a notice of each authorization, and each termination or revocation of an authorization, and an explanation of the reasons for the action. Under section 564(h)(1) of the FD&C Act, revisions to an authorization shall be made available on the internet website of FDA. Section 564 of the FD&C Act permits FDA to authorize the introduction into interstate commerce of a drug, device, or biological product intended for use when the Secretary of HHS has declared that circumstances exist justifying the authorization of emergency use. Products appropriate for emergency use may include products and uses that are not approved, cleared, or licensed under section 505, 510(k), 512, or 515 of the FD&C Act (21 U.S.C. 355, 360(k), 360b, or 360e) or section 351 of the PHS Act (42 U.S.C. 262), or conditionally approved under section 571 of the FD&C Act (21 U.S.C. 360ccc). FDA may issue an EUA only if, after consultation with the HHS Assistant Secretary for Preparedness and Response, the Director of the National Institutes of Health, and the Director of the Centers for Disease Control and Prevention (to the extent feasible and appropriate given the applicable circumstances), FDA [2] concludes: (1) that an agent referred to in a declaration of emergency or threat can cause a serious or life-threatening disease or condition; (2) that, based on the totality of scientific evidence available to FDA, including data from adequate and well-controlled clinical trials, if available, it is reasonable to believe that (A) the product may be effective in diagnosing, treating, or preventing (i) such disease or condition; or (ii) a serious or life-threatening disease or condition caused by a product authorized under section 564, approved or cleared under the FD&C Act, or licensed under section 351 of the PHS Act, for diagnosing, treating, or preventing such a disease or condition caused by such an agent; and (B) the known and potential benefits of the product, when used to diagnose, prevent, or treat such disease or condition, outweigh the known and potential risks of the product, taking into consideration the material threat posed by the agent or agents identified in a declaration under section 564(b)(1)(D) of the FD&C Act, if applicable; (3) that there is no adequate, approved, and available alternative to the product for diagnosing, preventing, or treating such disease or condition; (4) in the case of a determination described in section 564(b)(1)(B)(ii), that the request for emergency use is made by the Secretary of Defense; and (5) that such other criteria as may be prescribed by regulation are satisfied. No other criteria for issuance have been prescribed by regulation under section 564(c)(4) of the FD&C Act.

II. Electronic Access

An electronic version of this document and the full text of the Authorizations are available on the internet and can be accessed from *https://www.fda.gov/emergency-preparedness-and-response/mcm-legal-regulatory-and-policy-framework/emergency-use-authorization.*

III. The Authorizations

Having concluded that the criteria for the issuance of the following Authorizations under section 564(c) of the FD&C Act are met, FDA has authorized the emergency use of the following products for diagnosing, treating, or preventing COVID–19 subject to the terms of each Authorization. The Authorizations in their entirety, including any authorized fact sheets and other written materials, can be accessed from the FDA web page entitled ''Emergency Use Authorization,'' available at *https://www.fda.gov/emergency-preparedness-and-response/mcm-legal-regulatory-and-policy-framework/emergency-use-authorization.* The lists that follow include Authorizations issued from January 25, 2022, through June 15, 2022, and we have included explanations of the reasons for their issuance, as required by section 564(h)(1) of the FD&C Act. In addition, the EUAs that have been reissued can be accessed from

[1] In the case of a determination by the Secretary of Defense, the Secretary of HHS shall determine within 45 calendar days of such determination, whether to make a declaration under section 564(b)(1) of the FD&C Act, and, if appropriate, shall promptly make such a declaration.

[2] The Secretary of HHS has delegated the authority to issue an EUA under section 564 of the FD&C Act to the Commissioner of Food and Drugs.

FDA's web page: *https://www.fda.gov/emergency-preparedness-and-response/mcm-legal-regulatory-and-policy-framework/emergency-use-authorization.*

FDA is hereby announcing the following Authorizations for molecular diagnostic and antigen tests for COVID–19, excluding multianalyte tests: [3]

- Fluidigm Corporation's Advanta Dx COVID–19 EASE Assay, issued February 7, 2022;
- Uh-Oh Labs Inc.'s UOL COVID–19 Test, issued February 8, 2022;
- Oceanit Foundry LLC's ASSURE–100 Rapid COVID–19 Test, issued February 28, 2022;
- Siemens Healthcare Diagnostics, Inc.'s ADVIA Centaur SARS–CoV–2 Antigen (CoV2Ag), issued March 11, 2022;
- Siemens Healthcare Diagnostics, Inc.'s Atellica IM SARS–CoV–2 Antigen (CoV2Ag), issued March 11, 2022;
- Minute Molecular Diagnostics, Inc.'s DASH SARS–CoV–2/S Test, issued March 15, 2022;
- PHASE Scientific International, Ltd.'s INDICAID COVID–19 Rapid Antigen At-Home Test, issued March 16, 2022;
- Helix OpCo LLC's (dba Helix) Helix SARS–CoV–2 Test, issued March 17, 2022;
- Quest Diagnostics Nichols Institute's Quest RC COVID–19 PCR DTC, issued March 21, 2022;
- Quest Diagnostics Nichols Institute's Quest PF COVID–19 PCR DTC, issued March 21, 2022;
- Quest Diagnostics Nichols Institute's Quest COVID–19 PCR DTC, issued March 21, 2022;
- DC Department of Health's Test Yourself DC At-Home COVID–19 Collection Kit, issued April 6, 2022;
- OSANG LLC's OHC COVID–19 Antigen Self Test, issued April 6, 2022;
- Xiamen Boson Biotech Co., Ltd.'s Rapid SARS–CoV–2 Antigen Test Card, issued April 6, 2022;
- UCSD BCG EXCITE Lab's UCSD EXCITE COVID–19 EL Test, issued April 7, 2022;
- MicroGEM U.S., Inc.'s MicroGEM Sal6830 SARS–CoV–2 Saliva Test, issued April 14, 2022;
- LGC, Biosearch Technologies's Biosearch Technologies SARS–CoV–2 ultra-high-throughput End-Point RT–PCR Test, issued April 26, 2022;
- Abbott Diagnostics Scarborough, Inc.'s ID NOW COVID–19 2.0, issued May 6, 2022;
- Cepheid's Xpert Xpress CoV–2 *plus,* issued May 10, 2022;
- Nexus Medical Labs, LLC.'s Nexus High Throughput SARS–CoV–2 Assay, issued May 17, 2022;
- DxLab Inc.'s DxLab COVID–19 Test, issued June 1, 2022;
- Roche Molecular Systems, Inc.'s cobas SARS–CoV–2 Duo for use on the cobas 6800/8800 Systems (cobas SARS–CoV–2 Duo), issued June 14, 2022;

FDA is hereby announcing the following Authorizations for serology tests: [4]

- LG Chem, Ltd.'s *AdvanSure* SARS–CoV–2 IgG(S1) ELISA, issued May 19, 2022;
- LG Chem, Ltd.'s *AdvanSure* SARS–CoV–2 IgG(RBD) ELISA, issued May 31, 2022.

FDA is hereby announcing the following Authorizations for multianalyte in vitro diagnostics:

- Cleveland Clinic Robert J. Tomsich Pathology and Laboratory Medicine Institute's SelfCheck cobas SARS–CoV–2 + Flu Assay, issued April 11, 2022; [5]
- OPTI Medical Systems, Inc.'s OPTI SARS–CoV–2/Influenza A/B RT–PCR Test (Version 1 and Version 2), issued April 21, 2022; [6]
- Laboratory Corporation of America's (Labcorp's) Labcorp Seasonal Respiratory Virus RT–PCR DTC Test, issued May 16, 2022; [7]
- Laboratory Corporation of America's (Labcorp's) Labcorp Seasonal Respiratory Virus RT–PCR Test, issued May 17, 2022; [8]

FDA is hereby announcing the following Authorization for a SARS–CoV–2 genotyping test:

- Laboratory Corporation of America's (Labcorp's) Labcorp VirSeq SARS–CoV–2 NGS Test, issued June 10, 2022.[9]

FDA is hereby announcing the following Authorization for a SARS–CoV–2 diagnostic test that analyzes breath samples:

[3] As set forth in the EUAs for these products, FDA has concluded that: (1) SARS–CoV–2, the virus that causes COVID–19, can cause a serious or life-threatening disease or condition, including severe respiratory illness, to humans infected by this virus; (2) based on the totality of scientific evidence available to FDA, it is reasonable to believe that the products may be effective in diagnosing COVID–19, and that the known and potential benefits of the products, when used for diagnosing COVID–19, outweigh the known and potential risks of such products; and (3) there is no adequate, approved, and available alternative to the emergency use of the products.

[4] As set forth in the EUAs for these products, FDA has concluded that: (1) SARS–CoV–2 can cause a serious or life-threatening disease or condition, including severe respiratory illness, to humans infected by this virus; (2) based on the totality of scientific evidence available to FDA, it is reasonable to believe that the products may be effective in diagnosing recent or prior infection with SARS–CoV–2 by identifying individuals with an adaptive immune response to the virus that causes COVID–19, and that the known and potential benefits of the products when used for such use, outweigh the known and potential risks of the products; and (3) there is no adequate, approved, and available alternative to the emergency use of the products.

[5] As set forth in the EUA, FDA has concluded that: (1) SARS–CoV–2 can cause a serious or life-threatening disease or condition, including severe respiratory illness, to humans infected by this virus; (2) based on the totality of scientific evidence available to FDA, it is reasonable to believe that the product may be effective in diagnosing COVID–19 through the simultaneous qualitative detection and differentiation of SARS–CoV–2, influenza A virus, and/or influenza B virus ribonucleic acid (RNA) and that the known and potential benefits of the product when used for diagnosing COVID–19, outweigh the known and potential risks of the product; and (3) there is no adequate, approved, and available alternative to the emergency use of the product.

[6] As set forth in the EUA, FDA has concluded that: (1) SARS–CoV–2 can cause a serious or life-threatening disease or condition, including severe respiratory illness, to humans infected by this virus; (2) based on the totality of scientific evidence available to FDA, it is reasonable to believe that the product may be effective in diagnosing COVID–19 through the simultaneous qualitative detection and differentiation of SARS–CoV–2, influenza A virus, and/or influenza B virus RNA and that the known and potential benefits of the product when used for diagnosing COVID–19, outweigh the known and potential risks of the product; and (3) there is no adequate, approved, and available alternative to the emergency use of the product.

[7] As set forth in the EUA, FDA has concluded that: (1) SARS–CoV–2 can cause a serious or life-threatening disease or condition, including severe respiratory illness, to humans infected by this virus; (2) based on the totality of scientific evidence available to FDA, it is reasonable to believe that the product may be effective in diagnosing COVID–19 through the simultaneous qualitative detection and differentiation of SARS–CoV–2, influenza A virus, influenza B virus and/or respiratory syncytial virus (RSV) RNA and that the known and potential benefits of the product when used for diagnosing COVID–19, outweigh the known and potential risks of the product; and (3) there is no adequate, approved, and available alternative to the emergency use of the product.

[8] As set forth in the EUA, FDA has concluded that: (1) SARS–CoV–2 can cause a serious or life-threatening disease or condition, including severe respiratory illness, to humans infected by this virus; (2) based on the totality of scientific evidence available to FDA, it is reasonable to believe that the product may be effective in diagnosing COVID–19 through the simultaneous qualitative detection and differentiation of SARS–CoV–2, influenza A virus, influenza B virus and/or RSV RNA and that the known and potential benefits of the product when used for diagnosing COVID–19, outweigh the known and potential risks of the product; and (3) there is no adequate, approved, and available alternative to the emergency use of the product.

[9] As set forth in the EUAs for this product, FDA has concluded that: (1) SARS–CoV–2, the virus that causes COVID–19, can cause a serious or life-threatening disease or condition, including severe respiratory illness, to humans infected by this virus; (2) based on the totality of scientific evidence available to FDA, it is reasonable to believe that the product may be effective in diagnosing COVID–19, through the identification and differentiation of SARS–CoV–2 Phylogenetic Assignment of Named Global Outbreak (PANGO) lineages, and that the known and potential benefits of the product, when used for diagnosing COVID–19, outweigh the known and potential risks of such product; and (3) there is no adequate, approved, and available alternative to the emergency use of the product.

• InspectIR Systems LLC's InspectIR COVID–19 Breathalyzer, issued April 14, 2022; [10]

FDA is hereby announcing the following Authorizations for other medical devices:

• Quest Diagnostics Nichols Institute's Quest COVID–19 PCR Test Home Collection Kit, issued March 21, 2022; [11]

• Audere's HealthPulse@home Fusion, issue April 26, 2022.[12]

Dated: July 18, 2022.

Lauren K. Roth,

Associate Commissioner for Policy.

[FR Doc. 2022–15699 Filed 7–21–22; 8:45 am]

BILLING CODE 4164–01–P

[10] As set forth in the EUAs for this product, FDA has concluded that: (1) SARS–CoV–2, the virus that causes COVID–19, can cause a serious or life-threatening disease or condition, including severe respiratory illness, to humans infected by this virus; (2) based on the totality of scientific evidence available to FDA, it is reasonable to believe that the product may be effective in diagnosing COVID–19, and that the known and potential benefits of the product, when used for diagnosing COVID–19, outweigh the known and potential risks of such product; and (3) there is no adequate, approved, and available alternative to the emergency use of the product.

[11] As set forth in the EUA, FDA has concluded that: (1) SARS–CoV–2 can cause a serious or life-threatening disease or condition, including severe respiratory illness, to humans infected by this virus; (2) based on the totality of scientific evidence available to FDA, it is reasonable to believe that the product may be effective in diagnosing COVID–19, by serving as an appropriate means to collect and transport human specimens so that an authorized laboratory can detect SARS–CoV–2 RNA from the home-collected human specimen, and that the known and potential benefits of the product when used for diagnosing COVID–19, outweigh the known and potential risks of the product; and (3) there is no adequate, approved, and available alternative to the emergency use of the product.

[12] As set forth in the EUA, FDA has concluded that: (1) SARS–CoV–2 can cause a serious or life-threatening disease or condition, including severe respiratory illness, to humans infected by this virus; (2) based on the totality of scientific evidence available to FDA, it is reasonable to believe that the product may be effective in diagnosing COVID–19 by serving as an appropriate means to collect and transport human specimens so that an authorized laboratory can detect SARS–CoV–2 RNA from the collected human specimen, and that the known and potential benefits of the product when used for such use, outweigh the known and potential risks of the product; and (3) there is no adequate, approved, and available alternative to the emergency use of the product.

DEPARTMENT OF HOMELAND SECURITY

[Docket No. USCBP–2022–0027]

Privacy Act of 1974; System of Records

AGENCY: U.S. Customs and Border Protection, Department of Homeland Security.

ACTION: Notice of new Privacy Act system of records.

SUMMARY: In accordance with the Privacy Act of 1974, the Department of Homeland Security (DHS)/U.S. Customs and Border Protection (CBP) proposes to establish a new DHS system of records titled, ''DHS/CBP–027 Customs Broker Management (CBM).'' The records in this system are currently covered under the ''DHS/CBP–010 Persons Engaged in International Trade in Customs and Border Protection Licensed/Regulated Activities Systems of Records'' and historically under the ''Treasury/CS.069 Customs Brokers File''. DHS/CBP is creating this new System of Records Notice (SORN) to distinguish the Customs Broker application and exam, license, and vetting records from the other records in ''DHS/CBP–010 Persons Engaged in International Trade in Customs and Border Protection Licensed/Regulated Activities Systems of Records''. This newly established system will be included in DHS's inventory of record systems.

DATES: Submit comments on or before August 22, 2022. This new system will be effective upon publication. New or modified routine uses will be effective August 22, 2022.

ADDRESSES: You may submit comments, identified by docket number USCBP–2022–0027 by one of the following methods:

• *Federal e-Rulemaking Portal: http://www.regulations.gov.* Follow the instructions for submitting comments.

• *Fax:* 202–343–4010.

• *Mail:* Lynn Parker Dupree, Chief Privacy Officer, Privacy Office, Department of Homeland Security, Washington, DC 20528–0655.

Instructions: All submissions received must include the agency name and docket number USCBP–2022–0027. All comments received will be posted without change to *http://www.regulations.gov,* including any personal information provided.

Docket: For access to the docket to read background documents or comments received, go to *http://www.regulations.gov.*

FOR FURTHER INFORMATION CONTACT: For general questions, please contact: Debra L. Danisek, (202) 344–1610, *privacy.cbp@cbp.dhs.gov,* CBP Privacy Officer, U.S. Customs and Border Protection, Ronald Reagan Building, 1300 Pennsylvania Avenue NW, Washington, DC 20229. For privacy questions, please contact: Lynn Parker Dupree, (202) 343–1717, *Privacy@hq.dhs.gov,* Chief Privacy Officer, Privacy Office, Department of Homeland Security, Washington, DC 20528–0655.

SUPPLEMENTARY INFORMATION:

I. Background

In accordance with the Privacy Act of 1974, 5 U.S.C. 552a, the Department of Homeland Security (DHS) proposes to establish a new DHS system of records titled, ''DHS/U.S. Customs and Border Protection (CBP)–027 Customs Broker Management.'' The records in this system are currently covered under the ''DHS/CBP–010 Persons Engaged in International Trade in Customs and Border Protection Licensed/Regulated Activities Systems of Records'' (73 FR 77753, December 19, 2008) and historically under the ''Treasury/CS.069 Customs Brokers File'' (66 FR 52984, October 18, 2001). DHS/CBP is creating this new System of Records Notice to distinguish the Customs Broker application, exam, license, and vetting records from the other records in ''DHS/CBP–010 Persons Engaged in International Trade in Customs and Border Protection Licensed/Regulated Activities Systems of Records'' (73 FR 77753, December 19, 2008). In addition, CBP provides notice for a new collection and maintenance of information (*i.e.,* audio and video recordings) from individuals taking the Customs Broker License Exam (CBLE).

Customs Brokers are private individuals, associations, corporations, or partnerships licensed, regulated, and empowered by CBP to assist importers and exporters in meeting federal requirements governing imports and exports. Customs Brokers submit necessary information and appropriate payments to DHS/CBP on behalf of their clients and charge a fee for their service. Customs Brokers must have expertise in the entry procedures, admissibility requirements, classifications, valuation, and applicable rates of duties, taxes, and fees for imported merchandise.

Pursuant to 19 CFR 111.11, an individual is eligible to qualify for a Customs Broker license if he or she (1) is a U.S. citizen on the date of submission of the application referred to in 19 CFR 111.12(a) (OMB Control Number 1651–0034/CBP Form 3124) and is not an officer or employee of the U.S. government, (2) is the age of 21 prior to the date of submission of the application, (3) possesses good moral character, and (4) has passed the Customs Broker License Exam, by attaining a passing grade (75 percent or higher) on the examination taken within the 3-year period before submission of the application.

A partnership is eligible to qualify for a Customs Broker license if they have at

least one member of the partnership who is a broker. *See* 19 CFR 111.11(b). An association or corporation is eligible to qualify for a Customs Broker license if (1) they are empowered under its articles of association or articles of incorporation to transact customs business as a broker, and (2) have at least one officer who is a broker. *See* 19 CFR 111.11(c).

DHS/CBP manages the Customs Broker's license program and collects information from applicants when they register to take the Customs Broker License Exam, during the administration of the Customs Broker License Exam, when they apply for a broker's license, throughout the background investigation processes, through the triennial reporting process, and through continuing education requirements.

The Customs Broker License Exam is offered to applicants twice a year. Applicants can go to *https://e.cbp.dhs.gov/ecbp/#/main* to register to take the exam. In addition to providing biographic information when registering, applicants are also required to pay a registration fee which is completed though the eCBP portal. Applicants can register for either an in-person or remotely proctored examination. DHS/CBP may video and/or audio record applicants taking either in-person or proctored exams. These recordings allow DHS/CBP to ensure a fair and equitable examination and monitor compliance with examination procedures and requirements.

Once an applicant has successfully passed the exam, the applicant can apply for a Customs Broker license at a CBP facility near where the applicant plans to transact business as a Broker. The Customs Broker license package requires applicants to submit additional biographic information, via CBP Form 3124 (OMB Control No. 1651–0034), and fingerprints are collected at a CBP facility by a CBP Officer and sent to the CBP Trusted Worker Program System (TWP).[1] DHS/CBP will use this information to conduct a thorough background investigation, which will include a fingerprint analysis, review of character references, as well as reviews of credit reports and arrest records. DHS/CBP will use all available information to determinate whether to grant a Customs Broker license. Additionally, DHS/CBP conducts periodic reviews of Broker license holders to determine if a Broker's license should be revoked.

DHS/CBP stores information related to Broker's licenses in the Automated Commercial Environment system (ACE) and on designated CBP servers. Fingerprints collected as part of the background investigation process are stored in the DHS Office of Biometric Identity Management (OBIM) Automatic Biometric Identification System (IDENT). In addition, some information will be stored on DHS contractors' systems to assist in the administration of the Customs Broker License Examination. Any files related to appeals will be transferred to CBP and maintained on a CBP system.

Consistent with DHS' information sharing mission, information stored in the DHS/CBP–027 Customs Broker Management system of records may be shared with other DHS components that have a need to know the information to carry out their national security, law enforcement, immigration, intelligence, or other homeland security functions. In addition, DHS/CBP may share information with appropriate federal, state, local, tribal, territorial, foreign, or international government agencies consistent with the routine uses set forth in this system of records notice.

On September 10, 2021, CBP published a non-Privacy Act Notice of Proposed Rulemaking (NPRM) in the **Federal Register** (86 FR 50794) proposing to amend the CBP regulations to require continuing education for individual customs broker license holders (individual brokers) and to create a framework for administering this requirement. The Notice of Proposed Rulemaking provided for a 60-day comment period, which ended on November 9, 2021. Under the notice of proposed rulemaking, individual brokers must earn continuing education credits for a variety of training or educational activities, whether in-person or online, including the completion of coursework, seminars, workshops, symposia, or conventions, and, subject to certain limitations and requirements, the preparation and presentation of subject matter as an instructor, discussion leader, or speaker. Individual brokers must report and certify their compliance with the continuing broker education requirement upon the submission of the Triennial Status Report (TSR). CBP intends to publish a Final Rule which will effectuate the changes described above.

Furthermore, DHS is issuing a concurrent Privacy Act Notice of Proposed Rulemaking to exempt this system of records from certain provisions of the Privacy Act elsewhere in the **Federal Register**.

This newly established system will be included in DHS's inventory of record systems.

II. Privacy Act

The fair information practice principles found in the Privacy Act underpin the statutory framework governing the means by which Federal Government agencies collect, maintain, use, and disseminate individuals' records. The Privacy Act applies to information that is maintained in a ''system of records.'' A ''system of records'' is a group of any records under the control of an agency from which information is retrieved by the name of an individual or by some identifying number, symbol, or other identifying particular assigned to the individual. In the Privacy Act, an individual is defined to encompass U.S. citizens and lawful permanent residents. Additionally, the Judicial Redress Act (JRA) provides covered persons with a statutory right to make requests for access and amendment to covered records, as defined by the Judicial Redress Act, along with judicial review for denials of such requests. In addition, the Judicial Redress Act prohibits disclosures of covered records, except as otherwise permitted by the Privacy Act.

Below is the description of the DHS/CBP–027 Customs Broker Management System of Records.

In accordance with 5 U.S.C. 552a(r), DHS has provided a report of this system of records to the Office of Management and Budget and to Congress.

SYSTEM NAME AND NUMBER:

Department of Homeland Security (DHS)/U.S. Customs and Border Protection (CBP)–027 Customs Broker Management System of Records.

SECURITY CLASSIFICATION:

Unclassified.

SYSTEM LOCATION:

Records are maintained at CBP Headquarters in Washington, DC, and field offices. CBP maintains records in the Automated Commercial Environment system, as well as other applications that support Customs Broker License Examination and program management. Audio and video recordings of remotely proctored exams, images of examinees, images of examinees' identification documents, and broker exam results are stored on vendor servers. Any files that are subject to Freedom of Information Act (FOIA)

[1] *See* U.S. DEPARTMENT OF HOMELAND SECURITY, U.S. CUSTOMS AND BORDER PROTECTION, PRIVACY IMPACT ASSESSMENT FOR THE TRUSTED WORKER PROGRAM SYSTEM (TWP), DHS/CBP/PIA–062, *available at https://www.dhs.gov/privacy-documents-us-customs-and-border-protection.*

and Privacy Act requests will be transferred to CBP by the vendor and maintained on a CBP system.

SYSTEM MANAGER(S):

Director, Commercial Operations, Revenue and Entry, Office of Trade, U.S. Customs and Border Protection, 1331 Pennsylvania Avenue NW, Washington, DC 20229.

AUTHORITY FOR MAINTENANCE OF THE SYSTEM:

19 U.S.C. 1641 and 19 CFR 111; and 31 U.S.C. 7701(c).

PURPOSE(S) OF THE SYSTEM:

DHS/CBP maintains information about individuals to determine (1) an individual's suitability for acquiring a Customs Broker license, whether that individual is representing him or herself or affiliated with an association, corporation, or partnership, and (2) determine whether a licensed Customs Broker continues to meet the eligibility requirements to maintain that Customs Broker license.

CATEGORIES OF INDIVIDUALS COVERED BY THE SYSTEM:

Categories of individuals in the system include:

1. Individuals applying for, issued, or denied a Customs Broker license, whether individually or as part of an organization, including individuals who register for and attempt the Customs Broker License Examination;
2. Individuals working for, or applying to work for, a licensed customs broker, association, corporation, or partnership; and
3. Any other individuals relevant to CBP's determination of the granting and maintenance of a Customs Broker license.

CATEGORIES OF RECORDS IN THE SYSTEM:

DHS/CBP collects the following information from individuals registering for the Customs Broker License Examination through the eCBP portal (OMB Control No. 1651–0034):

- Individual's Name (First, Last) (Middle initial is optional);
- Residence Address and Mailing Address (Street, City, State, Zip Code);
- Email Address;
- Primary Phone Number;
- Port of Affiliation;
- Date of Birth;
- Social Security number (SSN); and
- American Disabilities Act request for a Reasonable Accommodation.

CBP also assigns four Unique Identifying Numbers (UID) to the examinee after they register on eCBP:

- ACE ID;
- Exam ID;
- Receipt Number; and
- *Pay.Gov* ID.

DHS/CBP collects the following information from individuals through vendor servers during the Customs Broker License Examination:

- Video recording and photo capture of examinee's face at the Customs Broker License Exam check-in process;
- Images of examinees;
- Images of examinees identification documents;
- Video/audio recording of examinees while testing; and
- Broker exam results.

Individuals who have passed the Customs Broker License Exam and are now applying for Customs Brokers License via the CBP 3124 Form (OMB Control No. 1651–0034) and through the Trusted Worker Program System, provide CBP with these additional data elements:

- Type of license applying for (individual, association, corporation, or partnership);
- Has the applicant ever applied for a Customs Broker License? (yes or no);
- Has the applicant (or any Officer, Member, or Principal) ever had a license suspended, refused, revoked, or cancelled? (yes or no);
- Is this applicant (or any Officer, Member, or Principal) an Officer or Employee of the United States? (yes or no);
- Place of Birth (City and State);
- Tax Identification Number (TIN), or Employer Identification Number (EIN);
- U.S. Citizenship (natural-born or naturalized, and date and place);
- Criminal History;
- Financial History (Bankruptcy of personal or business finances for which you had oversight);
- Proposed type of Customs Business (Individual, Association, Corporation, Partnership or Employee);
- Employment and Character References (References Names, Phone Numbers, Addresses);
- Any correspondence (*e.g.,* emails, letters, phone records) relating to persons engaged in international trade in CBP licensed/regulated activities; and
- Fingerprints.

DHS/CBP collects the following information from associations, corporations, or partnerships through the Customs Brokers License application, CBP 3124 Form (OMB Control No. 1651–0034):

- Date associations, corporation, or partnership was organized;
- State where organized;
- Attachments:
- Copies of articles of incorporation or association; or
- Evidence of the partnership (copies of articles of agreement or affidavit signed by all partners.
- Names, Addresses, Titles, and Dates of Birth of all Officers of the Association or Corporation, and all Principals who have a controlling interest, who hold individual customs brokers licenses and give the general nature of duties of each, or if a partnership, the names and addresses of members who hold such licenses.
- Names, Addresses, Titles, and Dates of Birth of all Officers and Principals (including corporations, trusts, and/or other organizations) who have a controlling interest, and partners who do not hold customs brokers licenses.

CBP collects these additional data elements on the Triennial Status Report:

- Broker License Number to identify the correct license for which the report is being filed;
- Payment Information;
  - Fee Amount;
  - Payer Name; and
  - Payer Email Address.
- Employee list for all employees of a Customs Broker, including:
  - Name (First, Last);
  - Social Security Number;
  - Date of Birth;
  - Place of Birth; and
  - Home Address (Street, City, State, Zip Code).
- Proof of continuing education requirement.

Additionally, CBP periodically collects the following information from the CBP licensed brokers, associations, corporations, or partnerships:

- Requests for written approval to employ individual brokerage employees who have been convicted of a felony.

RECORD SOURCE CATEGORIES:

Records from Customs Broker License Examination applicants are obtained from the eCBP portal online registration at *https://e.cbp.dhs.gov/ecbp/#/main.* Records from Customs Broker applicants come directly from Customs Broker applicants using CBP Form 3124, and through information given by the applicant at a CBP facility (same information) submitted to DHS as stipulated through the licensing port's requests and stored in the Automated Commercial Environment. Information on Customs Broker applicants may come from other federal, state, tribal, or local law enforcement agencies during the background investigation. DHS/CBP may obtain records from credit reporting agencies as part of the background investigation. Additional information about Custom Broker applicants may come from character references. DHS/CBP obtains information about character references from the Customs Broker applicant as part of the application as

well as from the character reference during interviews. Audio and video recordings of remotely and proctored exams, images of examinees, images of examinees' identification documents, and broker exam results are stored on vendor servers. Any files that are subject to Freedom of Information Act (FOIA) and Privacy Act requests will be transferred to CBP by the vendor and maintained on a CBP system.

ROUTINE USES OF RECORDS MAINTAINED IN THE SYSTEM, INCLUDING CATEGORIES OF USERS AND PURPOSES OF SUCH USES:

In addition to those disclosures generally permitted under 5 U.S.C. 552a(b) of the Privacy Act, all or a portion of the records or information contained in this system may be disclosed outside DHS as a routine use pursuant to 5 U.S.C. 552a(b)(3) as follows:

A. To the Department of Justice (DOJ), including the U.S. Attorneys Offices, or other federal agencies conducting litigation or proceedings before any court, adjudicative, or administrative body, when it is relevant or necessary to the litigation and one of the following is a party to the litigation or has an interest in such litigation:

1. DHS or any component thereof;
2. Any employee or former employee of DHS in his/her official capacity;
3. Any employee or former employee of DHS in his/her individual capacity, only when DOJ or DHS has agreed to represent the employee; or
4. The United States or any agency thereof.

B. To a congressional office from the record of an individual in response to an inquiry from that congressional office made at the request of the individual to whom the record pertains.

C. To the National Archives and Records Administration (NARA) or General Services Administration pursuant to records management inspections being conducted under the authority of 44 U.S.C. secs. 2904 and 2906.

D. To an agency or organization for the purpose of performing audit or oversight operations as authorized by law, but only such information as is necessary and relevant to such audit or oversight function.

E. To appropriate agencies, entities, and persons when (1) DHS suspects or has confirmed that there has been a breach of the system of records; (2) DHS has determined that as a result of the suspected or confirmed breach there is a risk of harm to individuals, DHS (including its information systems, programs, and operations), the Federal Government, or national security; and (3) the disclosure made to such agencies, entities, and persons is reasonably necessary to assist in connection with DHS's efforts to respond to the suspected or confirmed breach or to prevent, minimize, or remedy such harm.

F. To another federal agency or federal entity, when DHS determines that information from this system of records is reasonably necessary to assist the recipient agency or entity in (1) responding to a suspected or confirmed breach or (2) preventing, minimizing, or remedying the risk of harm to individuals, the recipient agency or entity (including its information systems, programs, and operations), the Federal Government, or national security, resulting from a suspected or confirmed breach.

G. To an appropriate federal, state, tribal, local, international, or foreign law enforcement agency or other appropriate authority charged with investigating or prosecuting a violation or enforcing or implementing a law, rule, regulation, or order, when a record, either on its face or in conjunction with other information, indicates a violation or potential violation of law, which includes criminal, civil, or regulatory violations and such disclosure is proper and consistent with the official duties of the person making the disclosure.

H. To contractors and their agents, grantees, experts, consultants, and others performing or working on a contract, service, grant, cooperative agreement, or other assignment for DHS, when necessary to accomplish an agency function related to this system of records. Individuals provided information under this routine use are subject to the same Privacy Act requirements and limitations on disclosure as are applicable to DHS officers and employees.

I. To appropriate federal, state, local, tribal, or foreign governmental agencies or multilateral governmental organizations responsible for investigating or prosecuting the violations of, or for enforcing or implementing, a statute, rule, regulation, order, license, or treaty where DHS determines that the information would assist in the enforcement of civil or criminal laws.

J. To an appropriate federal, state, local, tribal, foreign, or international agency, if the information is relevant and necessary to a requesting agency's decision concerning the hiring or retention of an individual, or issuance of a security clearance, license, contract, grant, or other benefit, or if the information is relevant and necessary to a DHS decision concerning the hiring or retention of an employee, the issuance of a security clearance, the reporting of an investigation of an employee, the letting of a contract, or the issuance of a license, grant or other benefit and disclosure is appropriate to the proper performance of the official duties of the person making the request.

K. To a court, magistrate, or administrative tribunal in the course of presenting evidence, including disclosures to opposing counsel or witnesses in the course of civil discovery, litigation, or settlement negotiations or in connection with criminal law proceedings.

L. To third parties, such as credit bureaus, during the course of a law enforcement investigation or background check to the extent necessary to obtain information pertinent to the investigation, provided disclosure is appropriate to the proper performance of the official duties of the officer making the disclosure.

M. To the news media and the public, with the approval of the Chief Privacy Officer in consultation with counsel, when there exists a legitimate public interest in the disclosure of the information or when disclosure is necessary to preserve confidence in the integrity of DHS or is necessary to demonstrate the accountability of DHS's officers, employees, or individuals covered by the system, except to the extent it is determined that release of the specific information in the context of a particular case would constitute an unwarranted invasion of personal privacy.

POLICIES AND PRACTICES FOR STORAGE OF RECORDS:

DHS/CBP stores biographic records related to Broker Management in the Automated Commercial Environment, or within a CBP server. DHS/CBP stores biometric records related to Broker Management in IDENT. Audio recordings, video recordings, images of examinees, images of examinees identification documents, and broker exam results are stored on a vendor-owned server. Any files related to appeals will be transferred to CBP and maintained on a CBP system.

POLICIES AND PRACTICES FOR RETRIEVAL OF RECORDS:

DHS/CBP may retrieve records by individual's name (first, last, or middle initial), organization name, Social Security number, tax identification number, employer identification number, date of birth, port or port number, email address, phone number, payment receipt number, project area request type (*e.g.,* request date),

Customs Broker License Exam Project Areas (*e.g.,* exam date, pass/fail exam score, exam ID, and application date).

POLICIES AND PRACTICES FOR RETENTION AND DISPOSAL OF RECORDS:

In accordance with NARA-approved agency disposition authority, ''Licensing Records'' DAA–0568–2017–0006–0003, DHS/CBP retains biographic records in the Automated Commercial Environment system for six years from date that the license is terminated or the death of the licensee, as applicable, including the background check records uncovered as a result of the fingerprints used in the background check. CBP does not retain the actual fingerprints; however, CBP sends the fingerprints to OBIM and they are stored for 75 years or when no longer needed for legal or business purposes, whichever is later. The audio and video recordings, images of examinees, images of examinees identification documents, and broker exam results captured during the Customs Broker Licensing Exam process will be retained in accordance with the NARA-approved agency disposition authority, ''Customhouse Broker's Examination Records'' DAA–0568–2017–0006–0002, for three years and six months after exam and final appeal is concluded, whichever is applicable. CBP has proposed a new records schedule of 120 days after cutoff or final review, whichever is later for the audio and video recordings, images of examinees, images of examinees' identification documents, and broker exam results data collected and stored by the vendor. Any files subject to any FOIA or Privacy Act request will be transferred to CBP and maintained on a CBP system.

ADMINISTRATIVE, TECHNICAL, AND PHYSICAL SAFEGUARDS:

DHS/CBP safeguards records in this system according to applicable rules and policies, including all applicable DHS automated systems security and access policies. DHS/CBP has imposed strict controls to minimize the risk of compromising the information that is being stored. Access to the computer system containing the records in this system is limited to those individuals who have a need to know the information for the performance of their official duties and who have appropriate clearances or permissions.

RECORD ACCESS PROCEDURES:

DHS/CBP will consider individual requests to determine whether information may be released. Thus, individuals seeking access to and notification of any record contained in this system of records, or seeking to contest its content, may submit a request in writing to the Chief Privacy Officer and CBP's Freedom of Information Act (FOIA) Officer, whose contact information can be found at *http://www.dhs.gov/foia* under ''Contact Information.'' If an individual believes more than one component maintains Privacy Act records concerning them, the individual may submit the request to the Chief Privacy Officer and Chief Freedom of Information Act Officer, Department of Homeland Security, Washington, DC 20528–0655 or electronically at *https://www.dhs.gov/dhs-foia-privacy-act-request-submission-form.* Even if neither the Privacy Act nor the Judicial Redress Act provide a right of access, certain records about the individual may be available under the Freedom of Information Act.

When an individual is seeking records about themself from this system of records or any other Departmental system of records, the individual's request must conform with the Privacy Act regulations set forth in 6 CFR part 5. The individual must first verify their identity, meaning that the individual must provide their full name, current address, and date and place of birth. The individual must sign the request, and the individual's signature must either be notarized or submitted under 28 U.S.C. 1746, a law that permits statements to be made under penalty of perjury as a substitute for notarization. An individual may obtain more information about this process at *http://www.dhs.gov/foia.* In addition, the individual should, whenever possible:

- Explain why they believe the Department would have information being requested;
- Identify which component(s) of the Department they believe may have the information;
- Specify when the individual believes the records would have been created; and
- Provide any other information that will help Freedom of Information Act staff determine which DHS component agency may have responsive records.

If the request is seeking records pertaining to another living individual, the request must include an authorization from the individual whose record is being requested, authorizing the release to the requester.

Without the above information, the component(s) may not be able to conduct an effective search, and the individual's request may be denied due to lack of specificity or lack of compliance with applicable regulations.

Additionally, individuals seeking access to and notification of any record contained in this system of records, or seeking to contest its content, may submit a request in writing to the Broker Management Branch through the *BrokerManagement@cbp.dhs.gov* inbox, or to: U.S. Customs and Border Protection, Office of Trade, Trade Policy and Programs, Broker Management Branch, 1331 Pennsylvania Ave. NW, 9th Floor—Broker Management Branch, Washington, DC 20229–1142.

CONTESTING RECORD PROCEDURES:

For records covered by the Privacy Act or covered Judicial Redress Act records, individuals may make a request for amendment or correction of a record of the Department about the individual by writing directly to the Department component that maintains the record, unless the record is not subject to amendment or correction. The request should identify each particular record in question, state the amendment or correction desired, and state why the individual believes that the record is not accurate, relevant, timely, or complete. The individual may submit any documentation that would be helpful. If the individual believes that the same record is in more than one system of records, the request should state that and be addressed to each component that maintains a system of records containing the record. Regardless of whether the Privacy Act or Judicial Redress Act applies, individuals who believe that records in CBP's system include incorrect or inaccurate information may direct inquiries to the Broker Management Branch via email through the *BrokerManagement@cbp.dhs.gov* inbox, or via mail here: U.S. Customs and Border Protection, Office of Trade, Trade Policy and Programs, Broker Management Branch, 1331 Pennsylvania Ave. NW, 9th Floor—Broker Management Branch, Washington, DC 20229–1142.

NOTIFICATION PROCEDURES:

See ''Record Access Procedures'' above.

EXEMPTIONS PROMULGATED FOR THE SYSTEM:

The Secretary of Homeland Security has exempted this system pursuant to exemption 5 U.S.C. 552a(j)(2) of the Privacy Act, portions of this system are exempt from 5 U.S.C. 552a(c)(3) and (4); (d); (e)(1), (e)(2), (e)(3), (e)(4)(G), (e)(4)(H), (e)(4)(I), (e)(5), and (e)(8); (f); and (g). Additionally, the Secretary has exempted this system pursuant to 5 U.S.C. 552a(k)(2) of the Privacy Act from subsections (c)(3), (d), (e)(1), (e)(4)(G), (e)(4)(H), (e)(4)(I), and (f).

HISTORY:

None.

Lynn P. Dupree,

Chief Privacy Officer, Department of Homeland Security.

[FR Doc. 2022–15711 Filed 7–21–22; 8:45 am]

BILLING CODE 9111–14–P

DEPARTMENT OF HOUSING AND URBAN DEVELOPMENT

[Docket No. FR–7062–N–06]

Privacy Act of 1974; System of Records

AGENCY: Office of Chief Human Capitol Officer, Privacy Office, HUD.

ACTION: Notice of a rescindment of a system of record.

SUMMARY: The Single Family Insurance System—Claims Subsystem (CLAIMS) is operated to process single family insurance claims against defaulted loans the Federal Housing Administration insures. Pursuant to the provisions of the Privacy Act of 1974, as amended, the Department of the Housing and Urban Development (HUD) is issuing a public notice of its intent to rescind the Deputy Assistant Secretary for Finance and Budget, Federal Housing Administration, Single Family Post Insurance Division Privacy Act system of record, *HSNG.SF/HWAA.02:* Single Family Insurance System—Claims Subsystem (CLAIMS), due to the system not qualifying as a Privacy Act System of Record.

DATES: This System of Records rescindment is effective upon publication, July 22, 2022. The specific date for when this system ceased to be a Privacy Act System of Records is July 27, 2021.

ADDRESSES: You may submit comments, identified by docket number and title by one of the following methods:

Federal e-Rulemaking Portal: http://www.regulations.gov. Follow the instructions provided on that site to submit comments electronically.

Fax: 202–619–8365.

Email: www.privacy@hud.gov.

Mail: Attention: Privacy Office; LaDonne White, Chief Privacy Officer; The Executive Secretariat; 451 Seventh Street SW, Room 10139; Washington, DC 20410–0001.

Instructions: All submissions received must include the agency name and docket number for this rulemaking. All comments received will be posted without change to *http://www.regulations.gov.* including any personal information provided.

Docket: For access to the docket to read background documents or comments received go to *http://www.regulations.gov.*

FOR FURTHER INFORMATION CONTACT: LaDonne White, The Privacy Office; 451 Seventh Street SW, Room 10139; Washington, DC 20410–0001; telephone number 202–708–3054 (this is not a toll-free number). Individuals who are hearing- or speech-impaired may access this telephone number via TTY by calling the Federal Relay Service at 800–877–8339 (this is a toll-free number).

SUPPLEMENTARY INFORMATION: The Single Family Insurance System—Claims Subsystem (CLAIMS) was evaluated and identified for rescindment from the Finance and Budget Office of Housing Single Family Post Insurance Division Privacy Act systems of records inventory. The CLAIMS SORN was filed pursuant to the Department's Title II Claims Insurance Benefits Program. CLAIMS receives, edits, controls, monitors, and authorizes payment for all Single Family mortgage insurance claims benefits to FHA approved Mortgagees for loans HUD insures. The latest SORN for CLAIMS was published in the **Federal Register** on February 26, 2014. The SORN retrieval practice was evaluated, and it was determined that records within the system are not retrieved by an individual's personal unique identifier including name. CLAIMS records are maintained and retrieved by the Federal Housing Administration (FHA) Case Number; this retrieval practice does not constitute a retrieval for purpose of the Privacy Act. Thus, the CLAIMS SORN is being rescinded. Records collected and used for claims insurance benefits filed by FHA-approved mortgagees will continue to be maintained by CLAIMS.

SYSTEM NAME AND NUMBER:

HSNG.SF/HWAA.02, Single Family Insurance System—Claims Subsystem (CLAIMS).

HISTORY:

HSNG.SF/HWAA.02: 79 FR 10827 (February 26, 2014).

HUD/SFH–02: 72 FR 65348 (November 20, 2007).

LaDonne White,

Departmental Privacy Officer.

[FR Doc. 2022–15704 Filed 7–21–22; 8:45 am]

BILLING CODE P

DEPARTMENT OF THE INTERIOR

Fish and Wildlife Service

[Docket No. FWS–R4–ES–2022–0096; FXES11130400000–223–FF04EF4000]

Receipt of Incidental Take Permit Application and Proposed Habitat Conservation Plan for the Sand Skink and Blue-Tailed Mole Skink; Polk County, FL; Categorical Exclusion

AGENCY: Fish and Wildlife Service, Interior.

ACTION: Notice of availability; request for comments and information.

SUMMARY: We, the Fish and Wildlife Service (Service), announce receipt of an application from KB Home Orlando, LLC (applicant) for an incidental take permit (ITP) under the Endangered Species Act. The applicant requests the ITP to take the federally listed sand skink and blue-tailed mole skink incidental to the construction and operation of a residential development in Polk County, Florida. We request public comment on the application, which includes the applicant's proposed habitat conservation plan (HCP), and on the Service's preliminary determination that this HCP qualifies as ''low effect,'' categorically excluded under the National Environmental Policy Act. To make this determination, we used our environmental action statement and low-effect screening form, both of which are also available for public review.

DATES: We must receive your written comments on or before August 22, 2022.

ADDRESSES:

Obtaining Documents: You may obtain copies of the documents online in Docket No. FWS–R4–ES–2022–0096 at *https://www.regulations.gov.*

Submitting Comments: If you wish to submit comments on any of the documents, you may do so in writing by one of the following methods:

- *Online: https://www.regulations.gov.* Follow the instructions for submitting comments on Docket No. FWS–R4–ES–2022–0096.
- *U.S. mail:* Public Comments Processing, Attn: Docket No. FWS–R4–ES–2022–0096; U.S. Fish and Wildlife Service, MS: PRB/3W, 5275 Leesburg Pike, Falls Church, VA 22041–3803.

FOR FURTHER INFORMATION CONTACT: Alfredo Begazo, by U.S. mail (see **ADDRESSES**), or via phone at 904–731–3121. Individuals in the United States who are deaf, deafblind, hard of hearing, or have a speech disability may dial 711 (TTY, TDD, or TeleBraille) to access telecommunications relay services.

Individuals outside the United States should use the relay services offered within their country to make international calls to the point-of-contact in the United States.

SUPPLEMENTARY INFORMATION: We, the Fish and Wildlife Service, announce receipt of an application from KB Home Orlando, LLC for an incidental take permit (ITP) under the Endangered Species Act of 1973, as amended (ESA; 16 U.S.C. 1531 *et seq.*). The applicant requests the ITP to take the federally listed sand skink (*Neoseps reynoldsi*) and blue-tailed mole-skink (*Eumeces egregius lividus*) (skinks) incidental to the construction of a residential development in Polk County, Florida. We request public comment on the application, which includes the applicant's HCP, and on the Service's preliminary determination that this HCP qualifies as ''low effect,'' categorically excluded under the National Environmental Policy Act (NEPA; 42 U.S.C. 4321 *et seq.*). To make this determination, we used our environmental action statement and low-effect screening form, both of which are also available for public review.

Project

The applicant requests a 5-year ITP to take skinks via the conversion of approximately 2.85 acres (ac) of occupied nesting, foraging, and sheltering skink habitat incidental to the construction of a residential development on a 15.6-ac parcel in Section 31, Township 28 South, Range 26 East, Polk County, Florida. The applicant proposes to mitigate for take of the skinks by purchasing credits equivalent to 5.7 ac of skink-occupied habitat from a Service-approved conservation bank. The Service would require the applicant to purchase the credits prior to engaging in any phase of the project.

Public Availability of Comments

Before including your address, phone number, email address, or other personal identifying information in your comment, be aware that your entire comment, including your personal identifying information, may be made available to the public. While you may request that we withhold your personal identifying information, we cannot guarantee that we will be able to do so.

Our Preliminary Determination

The Service has made a preliminary determination that the applicant's project—including the construction of single-family homes, paved roads, green areas, storm water ponds, and associated infrastructure (*e.g.,* electric, water, and sewer lines)—would individually and cumulatively have a minor or negligible effect on the skinks and the environment. Therefore, we have preliminarily concluded that the ITP for this project would qualify for categorical exclusion and that the HCP is low effect under our NEPA regulations at 43 CFR 46.205 and 46.210. A low-effect HCP is one that would result in (1) minor or negligible effects on federally listed, proposed, and candidate species and their habitats; (2) minor or negligible effects on other environmental values or resources; and (3) impacts that, when considered together with the impacts of other past, present, and reasonable foreseeable similarly situated projects, would not result in significant cumulative effects to environmental values or resources over time.

Next Steps

The Service will evaluate the application and the comments to determine whether to issue the requested permit. We will also conduct an intra-Service consultation pursuant to section 7 of the ESA to evaluate the effects of the proposed take. After considering the preceding and other matters, we will determine whether the permit issuance criteria of section 10(a)(1)(B) of the ESA have been met. If met, the Service will issue ITP number PER0042857 to the KB Home Orlando, LLC.

Authority

The Service provides this notice under section 10(c) of the ESA (16 U.S.C. 1531 *et seq.*) and its implementing regulations (50 CFR 17.32) and NEPA (42 U.S.C. 4321 *et seq.*) and its implementing regulations (40 CFR 1506.6 and 43 CFR 46.305).

Robert L. Carey,

Division Manager, Environmental Review, Florida Ecological Services Office.

[FR Doc. 2022–15707 Filed 7–21–22; 8:45 am]

BILLING CODE 4333–15–P

DEPARTMENT OF THE INTERIOR

Fish and Wildlife Service

[Docket No. FWS–R1–ES–2022–0074; FXES11140100000–223–FF01E0000]

Barred Owl Management Strategy; Intent To Prepare an Environmental Impact Statement; Washington, Oregon, and California

AGENCY: Fish and Wildlife Service, Interior.

ACTION: Notice of intent to prepare an environmental impact statement.

SUMMARY: We, the U.S. Fish and Wildlife Service (USFWS), are developing a proposed barred owl management strategy (management strategy) to address the threat of the nonnative, invasive barred owl (*Strix varia*) to the native northern and California spotted owls (*Strix occidentalis*). Implementation of the management strategy would require the take of barred owls, which is prohibited under the Migratory Bird Treaty Act (MBTA) unless authorized by a permit or regulation. We provide this notice to announce our intent to prepare an environmental impact statement to evaluate the impacts on the human environment related to the proposed management strategy and associated MBTA take authorization. In accordance with the National Environmental Policy Act, we are opening a public scoping comment period to help determine the scope of issues for analysis and announcing a virtual public scoping meeting.

DATES: We will accept online or hardcopy comments. Comments submitted online at *https://www.regulations.gov/* must be received by 11:59 p.m. Eastern Time on August 22, 2022. Hardcopy comments must be received or postmarked on or before August 22, 2022 (see **ADDRESSES**).

Virtual Public Scoping Meeting

We will hold a virtual public meeting during the scoping period. To provide for the attendance of interested parties across the three-State area without requiring travel to an in-person meeting, and to protect the public from potential spread of the COVID–19 virus, the public meeting will be held virtually on July 28, 2022, from 6 to 8 p.m. Pacific time.

ADDRESSES:

Submitting Comments: You may submit comments by one of the following methods:

- *Internet: https://www.regulations.gov.* Follow the instructions for submitting comments on Docket No. FWS–R1–ES–2022–0074.
- *U.S. mail:* Public Comments Processing; Attn: Docket No. FWS–R1–ES–2022–0074; U.S. Fish and Wildlife Service Headquarters, MS: PRB/3W; 5275 Leesburg Pike, Falls Church, VA 22041–3803.

For additional information about submitting comments, see Public Scoping Process under **SUPPLEMENTARY INFORMATION.**

Virtual Public Scoping Meeting: A link and access instructions for the

virtual scoping meeting will be posted to *https://www.fws.gov/office/oregon-fish-and-wildlife* at least 1 week prior to the public meeting date. Advance registration is not required.

FOR FURTHER INFORMATION CONTACT: Robin Bown, by telephone at 503–231–6923, or by email at *Robin_Bown@fws.gov.* Individuals in the United States who are deaf, deafblind, hard of hearing, or have a speech disability may dial 711 (TTY, TDD, or TeleBraille) to access telecommunications relay services. Individuals outside the United States should use the relay services offered within their country to make international calls to the point-of-contact in the United States.

SUPPLEMENTARY INFORMATION: We, the U.S. Fish and Wildlife Service (USFWS), are developing a proposed barred owl management strategy (management strategy) to address the threat the nonnative invasive barred owl poses to two native owl subspecies in the West, the northern spotted owl (*Strix occidentalis caurina*) and California spotted owl (*Strix occidentalis occidentalis*). The management strategy would involve the reduction of barred owl populations in targeted management areas in Washington, Oregon, and California. We will prepare an environmental impact statement (EIS) to evaluate the effects on the human environment related to the proposed action, due to the large scale of the action area across three States and the high level of public interest in this action.

Background

Barred owls are native to eastern North America. They began to expand their range around 1900, concurrent with European settlement and facilitated by the subsequent human-caused changes to the Great Plains and northern boreal forest. Barred owls arrived in the Pacific Northwest in the early 1970s, establishing populations in northern Washington in the early 1980s. They continue to spread southward in the Cascades and coastal mountains, building dense populations behind the invasion front.

The barred owl is slightly larger in size than the native spotted owl of the western forests. While barred owls prefer the same older, structurally diverse forest type selected by spotted owls, barred owls will utilize a wider range of forested habitat types than spotted owls, including wooded urban areas and large tracts of second-growth forests. In addition, barred owls are generalist predators, eating a much wider variety of prey items than the specialist spotted owls. Barred owls consume the same nocturnal arboreal rodents that are the focus of the spotted owls' diet, and also consume numerous other species, including other mammals, amphibians, insects, crayfish, and mollusks. Because of their larger size, adaptability to a wide variety of forested habitats, and ability to eat a wide variety of prey, barred owls occur in denser populations, outcompeting and excluding spotted owls from the latter's preferred habitats.

By 2004, we identified competition from the invasive barred owl as a primary threat to northern spotted owl populations (USFWS 2004). The 2011 Revised Recovery Plan for the Northern Spotted Owl (USFWS 2011) recommended that we manage to reduce the negative effects of barred owls on northern spotted owls (Recovery Action 30) (USFWS 2011). Based on the recent demographic analysis, northern spotted owl populations in the northern half of the species' range have dropped by over 75 percent in two decades and continue to decline at greater than 5 percent per year (Franklin et al. 2021). Without management of barred owls, extirpation of northern spotted owls from major portions of their historic range is likely in the near future.

In recent years, barred owls have penetrated into the range of the California spotted owl in the Sierra Nevada Mountains, although their population remains low and scattered at this time (Wood et al. 2020). While barred owls have not substantially impacted California spotted owls to date, the history of the invasion and impacts on northern spotted owls supports the assumption that, unless the barred owl populations can be managed, barred owls will continue to invade southward until barred owls threaten the California spotted owl.

In 2013, we initiated the Barred Owl Removal Experiment (Removal Experiment), implementing Recovery Action 29 for the northern spotted owl (USFWS 2011) to investigate the effect of barred owl removal on spotted owl population dynamics. The Removal Experiment, conducted in four study areas in Washington, Oregon, and California, used paired treatment areas (barred owl removal) and control areas (no barred owl removal), in order to test whether barred owl removal could reverse declining spotted owl population trends in study areas with differing environmental conditions. The removal of barred owls had a strong, positive effect on survival of spotted owls and a weaker, though still positive, effect on spotted owl dispersal and recruitment (Wiens et al. 2021). In the treatment areas where barred owls were removed, spotted owl populations stabilized. In paired control areas without barred owl removal, spotted owl populations continued to decline at 12 percent per year after 3 to 6 years of removal. The Removal Experiment demonstrated that barred owl removal can be an effective method for the conservation of spotted owls.

Using information from the recently completed Removal Experiment and other applicable studies and research findings, the USFWS is developing a proposed management strategy designed to reduce barred owl populations to improve the survival and recovery of northern spotted owls and to prevent declines in California spotted owls resulting from barred owl competition.

Implementation of a management strategy would involve take of barred owls. The barred owl is protected under the Migratory Bird Treaty Act (MBTA; 16 U.S.C. 793 *et seq.*), which prohibits take (as defined at 50 CFR 10.12) of protected migratory bird species unless authorized by the USFWS in accordance with the MBTA and implementing regulations. We propose to obtain authorization under the MBTA to allow the USFWS and other interested governmental agencies (Federal, State, or Tribal) to take barred owls as part of implementing the management strategy. Nongovernmental take may be authorized under an agency's authorization. Our EIS will evaluate the environmental impacts of the management strategy and the associated MBTA take authorization, as well as alternatives to the management strategy, including a no-action alternative.

Purpose and Need for the Proposed Action

The purpose of this action is to reduce barred owl populations to improve the survival and recovery of northern spotted owls and to prevent declines in California spotted owls from barred owl competition. Relative to northern spotted owls, the purpose is to stop or slow spotted owl population declines from barred owls within selected treatment areas in the short term and increase spotted owl populations in the intermediate term. Relative to the California spotted owl, the purpose is to limit the invasion of barred owls into the range of the subspecies and respond quickly to reduce barred owl populations that may become established.

The need for this action is to reduce the population of invasive barred owls within the range of northern and California spotted owls. Competition from the invasive barred owl is a

primary cause of the rapid and ongoing decline of northern spotted owl populations. Due to the rapidity of the decline, it is critical that we manage invasive barred owl populations to reduce their negative effect on spotted owls before northern spotted owls are extirpated from large portions of their native range. In the recent northern spotted owl demographic analyses, the authors stated, ''Our analyses indicated that northern spotted owl populations potentially face extirpation if the negative effects of barred owls are not ameliorated while maintaining northern spotted owl habitat across their range'' (Franklin et al. 2021). The Recovery Plan also emphasized the need for action in Recovery Action 30: ''Manage to reduce the negative effects of barred owls on northern spotted owls so that Recovery Criterion 1 can be met.'' Recovery Criterion 1 is to provide for a stable or increasing population trend of spotted owls throughout the range over 10 years. Therefore, the management strategy needs to provide for rapid implementation and result in swift reduction in barred owl competition.

California spotted owls face a similar risk from barred owl competition as barred owl populations continue to expand southward. While California spotted owls have not yet experienced substantial declines as a result of barred owl competition, the southward invasion of the barred owl has reached their range, and future impacts to California spotted owl populations are expected to be inevitable without barred owl management. Invasive species are very difficult to remove once established. Therefore, the management strategy needs to focus on limiting the invasion of barred owls into the California spotted owl range. If barred owl populations do become established, the management strategy needs to provide for early intervention to prevent adverse effects of barred owls on California spotted owl populations.

Preliminary Proposed Action and Alternatives

The proposed action is to finalize and implement a management strategy, including any necessary MBTA take authorization, to reduce barred owl populations to improve the survival and recovery of northern spotted owls and prevent declines in California spotted owls from barred owl competition. The management strategy will identify high-priority areas for barred owl management at both regional and local scales and for both the short and intermediate term. The scope and scale of barred owl management in each region or physiographic province would vary based on the current condition of the barred and spotted owl populations, availability of access, ownership patterns, and risk factors such as wildfire. The USFWS will evaluate all methods for removing barred owls from management areas, including lethal removal, which has been shown to be effective in situations where a rapid response is crucial.

The USFWS will prepare a draft EIS (DEIS) that will include a reasonable range of alternatives, which may include, but are not limited to, variations in the identification of high priority management sites, areas of concern, and specific mapped areas; protocols for the selection of management areas; and methods for managing barred owls in selected areas. All action alternatives will include monitoring of spotted and barred owls on management areas, and an adaptive management component to provide for minor modifications as new information becomes available.

Additionally, a No Action Alternative will be evaluated. Under the No Action Alternative, a management strategy would not be selected, and no MBTA take authorization would be provided to implement the management strategy. The No Action Alternative, if selected, would not preclude the USFWS or other entities from seeking to undertake barred owl management, including lethal removal. Any such management, if it required take of barred owls, would also require MBTA take authorization. The USFWS would evaluate such proposals on a case-by-case basis, including evaluation under NEPA as appropriate to the circumstances.

Summary of Expected Impacts

The DEIS will identify and describe the effects of the proposed Federal action on the human environment that are reasonably foreseeable, including direct, indirect, and cumulative effects. This includes effects that occur at the same time and place as the proposed action or alternatives and effects that are later in time or farther removed in distance from the proposed action or alternatives. Based on previous analyses related to the Barred Owl Removal Experiment (USFWS 2013), the anticipated impacts may include, but are not limited to, beneficial and adverse impacts to spotted owls, barred owls, other biological resources, land use, recreation and visitor use, historical and cultural resources, and socioeconomics. Beneficial impacts to spotted owls and localized adverse impacts to barred owls are expected, as these are the focus of the management strategy. Beneficial impacts to other biological resources, specifically to species that are prey for, or competitors with, barred owls may occur in localized areas where barred owl populations are reduced. Minimal localized, beneficial, and/or adverse impacts to recreation and visitor use, and to historical and cultural resources, may occur in areas where barred owl populations are reduced. Impacts to land use and socioeconomics may occur through application of applicable law, including local and State regulations. These and other impacts of the proposed action and alternatives will be analyzed in the DEIS (see 40 U.S.C. 4332; 40 CFR 1508.1(g) and 1502.16). The analysis will consider the adequacy of each alternative to meet the purpose and need, in light of the expected effects and other best available information.

Anticipated Permits and Authorizations

Anticipated permits, consultations, or other authorizations related to implementation of the management strategy and issuance of MBTA take authorization may include, but may not be limited to:

- ESA Section 7 consultation;
- State take permits;
- Government-to-government consultations with Tribes; and
- Consultation regarding effects of the action pursuant to the National Historic Preservation Act.

Schedule for the Decision-Making Process

Following scoping, the USFWS will prepare the DEIS and publish a notice of availability and request for public comments on the DEIS in the **Federal Register**. The USFWS expects to make the DEIS available to the public for comment by the fall of 2022. After public review and comment, the USFWS will evaluate comments received and complete a final EIS (FEIS). After preparation of the FEIS, the USFWS will prepare a record of decision pursuant to 40 CFR 1505.2 within the applicable timeframes described at 40 CFR 1506.11.

Public Scoping Process

This notice of intent initiates the scoping process, which guides the development of the EIS.

Virtual Public Meeting

A public scoping meeting will be conducted online. See **DATES** and **ADDRESSES** for the date, time, and connection information for the virtual public scoping meeting. During the meeting, the USFWS will present information about the management strategy and MBTA take authorization

and provide an opportunity for the public to ask questions about the proposed action to inform written scoping comments. No opportunity for oral scoping comments will be provided. Written comments may be submitted by either one of the methods listed in **ADDRESSES**.

Reasonable Accommodations

Persons needing reasonable accommodations in order to participate in the virtual public scoping meeting should contact the USFWS's Oregon Fish and Wildlife Office (see **FOR FURTHER INFORMATION CONTACT**) no later than 1 week before the meeting. Information regarding this proposed action is available in alternative formats upon request.

Request for Identification of Potential Alternatives, Information, and Analyses Relevant to the Proposed Action

We request written comments on the proposed action, including comments concerning the appropriate scope of the analysis and identification of relevant information, studies, and analyses, from the public; affected Federal, State, Tribal, and local governments, agencies, and offices; the scientific community; industry; or any other interested party. We will consider these comments in developing the DEIS. Specifically, we seek comments on:

1. Biological information, analysis and relevant data concerning the spotted owl, barred owl, and their interactions;
2. Components of the barred owl strategy, including but not limited to:
   a. Criteria and approaches for selecting management areas;
   b. Locations where barred owl management should be focused or where management should be avoided; and
   c. Specific techniques for removal of barred owls or reduction in barred owl populations;
3. Potential effects that the proposed action could have on endangered or threatened species, and their associated ecological communities or habitats;
4. Potential effects that the proposed action could have on other species and their habitats;
5. Potential effects that the proposed action could have on other aspects of the human environment, including ecological, aesthetic, historic, cultural, economic, social, environmental justice, or health effects;
6. The presence of historic and cultural properties—including archaeological sites, buildings, and structures; historic events; sacred and traditional areas; and other historic preservation concerns—in the proposed permit area, which are required to be considered in project planning by the National Historic Preservation Act;
7. Possible reasonable alternatives to meet the purpose and need that USFWS should consider,
8. Information on other current or planned activities in the range of the northern and California spotted owls that may interact with, or impact, spotted and barred owls, including any connected actions that are closely related to the proposed action; and
9. Other information relevant to the proposed management strategy and MBTA take authorization, and its impacts on the human environment.

Public Availability of Comments

You may submit your comments and materials by one of the methods listed in **ADDRESSES**. Comments received in response to this solicitation will be part of the public record for this proposed action. Before including your address, phone number, or other personal identifying information in your comment, you should be aware that your entire comment—including your personal identifying information—may be made publicly available at any time. While you can ask us in your comment to withhold your personal identifying information from public review, we cannot guarantee that we will be able to do so. All submissions from organizations or businesses, and from individuals identifying themselves as representatives or officials of organizations or businesses, will be made publicly available in their entirety. Comments submitted anonymously will be accepted and considered.

Lead and Cooperating Agencies

The USFWS is the lead agency for the NEPA process. The following agencies are cooperating agencies in the NEPA process: U.S. Forest Service (Regions 5 and 6), Bureau of Land Management (Oregon), National Park Service (Interior Regions 8, 9, 10, 12), the Hoh Tribe, Washington Department of Fish and Wildlife, Washington Department of Natural Resources, Oregon Department of Forestry, Oregon Department of Fish and Wildlife, California Department of Fish and Wildlife, and the California Department of Forestry and Fire Protection. The USFWS welcomes inquiries from other Federal, State, or Tribal agencies potentially interested in being a cooperating agency for the NEPA process.

Decision Maker and Nature of Decision To Be Made

The decision maker is the USFWS Regional Director of the Pacific Region. The decision to be made is whether to implement a management strategy and authorize the take of barred owls under the MBTA to implement the selected management strategy as needed, or to select the No Action Alternative and not implement a management strategy and associated MBTA take authorization.

Literature Cited

Franklin, A.B., et al. 2021. Range-wide declines of northern spotted owl populations in the Pacific Northwest: A meta-analysis. *Biological Conservation,* Vol. 259 (2021) 109168. 21 pp.

U.S. Fish and Wildlife Service (USFWS). 2004. *Northern spotted owl: Five Year Review Summary and Evaluation.* U.S. Fish and Wildlife Service, Portland, Oregon.

U.S. Fish and Wildlife Service (USFWS). 2011. *Revised Recovery Plan for the Northern Spotted Owl (Strix occidentalis caurina).* U.S. Fish and Wildlife Service, Portland, Oregon.

Wiens, J.D., et al. 2021. Invader removal triggers competitive release in a threatened avian predator. *PNAS,* Vol. 118, No. 31, e2102859118 (2021); *https://www.pnas.org/doi/full/10.1073/pnas.2102859118.*

Wood, C.M., R.J. Gutiérrez, J.J. Keane, and M.Z. Peery. 2020. Early detection of rapid Barred Owl population growth within the range of the California Spotted Owl advises the Precautionary Principle. *The Condor,* Volume 122, pp. 1–10.

Authority

We provide this notice in accordance with the NEPA regulations found at 40 CFR 1501.9(d).

Nanette Seto,

Acting Deputy Regional Director, U.S. Fish and Wildlife Service.

[FR Doc. 2022–15739 Filed 7–21–22; 8:45 am]

BILLING CODE 4333–15–P

DEPARTMENT OF THE INTERIOR

Bureau of Indian Affairs

[2231A2100DD/AAKC001030/A0A501010.999900; OMB Control Number 1076–0136, 1076–0157, 1076–0161, 1076–0167, 1076–0174, 1076–0180, 1076–0181, 1076–0186, 1076–0191, 1076–0192, 1076–0193]

Agency Information Collection Activities; Request for Comment on Fiscal Year 2023 Expirations Under the Paperwork Reduction Act

AGENCY: Bureau of Indian Affairs, Interior.

ACTION: Notice of information collection; request for comment.

SUMMARY: In accordance with the Paperwork Reduction Act of 1995, we, the Bureau of Indian Affairs (BIA), Bureau of Indian Education (BIE), and Office of the Assistant Secretary—Indian Affairs (AS–IA) are proposing to renew eleven (11) information collections. Office of Management and Budget (OMB) Control Number 1076–0136, 1076–0157, 1076–0161, 1076–0167, 1076–0174, 1076–0180, 1076–0181, 1076–0186, 1076–0191, 1076–0192, and 1076–0193.

DATES: Interested persons are invited to submit comments on or before September 20, 2022.

ADDRESSES: Send your comments on the information collection request (ICR) by mail to Steven Mullen, Information Collection Clearance Officer, Office of Regulatory Affairs and Collaborative Action—Indian Affairs, U.S. Department of the Interior, 1001 Indian School Road NW, Suite 229, Albuquerque, New Mexico 87104; or by email to *comments@bia.gov.* Please reference the relevant OMB Control Number in the subject line of your email.

FOR FURTHER INFORMATION CONTACT: Steven Mullen, Information Collection Clearance Officer, by email at *comments@bia.gov* or telephone at (202) 924–2650. Individuals in the United States who are deaf, deafblind, hard of hearing, or have a speech disability may dial 711 (TTY, TDD, or TeleBraille) to access telecommunications relay services. You may also view the ICR at *http://www.reginfo.gov/public/do/PRAMain.*

SUPPLEMENTARY INFORMATION: In accordance with the Paperwork Reduction Act of 1995 (PRA, 44 U.S.C. 3501 *et seq.*) and 5 CFR 1320.8(d)(1), all information collections require approval under the PRA. We may not conduct or sponsor and you are not required to respond to a collection of information unless it displays a currently valid OMB control number.

As part of our continuing effort to reduce paperwork and respondent burdens, we invite the public and other Federal agencies to comment on new, proposed, revised, and continuing collections of information. This helps us assess the impact of our information collection requirements and minimize the public's reporting burden. It also helps the public understand our information collection requirements and provide the requested data in the desired format.

We are especially interested in public comment addressing the following:

(1) Whether the collection of information is necessary for the proper performance of the functions of the agency, including whether the information will have practical utility;

(2) The accuracy of our estimate of the burden for the collection of information, including the validity of the methodology and assumptions used;

(3) Ways to enhance the quality, utility, and clarity of the information to be collected; and

(4) How might the agency minimize the burden of the collection of information on those who are to respond, including through the use of appropriate automated, electronic, mechanical, or other technological collection techniques or other forms of information technology, *e.g.,* permitting electronic submission of response.

Comments that you submit in response to this notice are a matter of public record. We will include or summarize each comment in our request to OMB to approve the ICR. Before including your address, phone number, email address, or other personal identifying information in your comment, you should be aware that your entire comment—including your personal identifying information—may be made publicly available at any time. While you can ask us in your comment to withhold your personal identifying information from public review, we cannot guarantee that we will be able to do so.

OMB Control Number 1076–0136

Abstract: We, the Bureau of Indian Affairs (BIA) are proposing to renew an information collection. The Indian Self-Determination and Education Assistance Act (ISDEAA) authorizes and directs the Bureau of Indian Affairs (BIA) to contract or compact with and fund Indian Tribes and Tribal organizations that choose to take over the operation of programs, services, functions and activities (PSFAs) that would otherwise be operated by the BIA. These PSFAs include programs such as law enforcement, social services, and tribal priority allocation programs. The data is maintained by BIA's Office of Indian Services, Division of Self-Determination.

Title of Collection: Indian Self-Determination and Education Assistance Act Programs.

OMB Control Number: 1076–0136.

Form Number: None.

Type of Review: Extension of a currently approved collection.

Respondents/Affected Public: Federally recognized Indian Tribes, Tribal organizations and contractors.

Total Estimated Number of Annual Respondents: 567.

Total Estimated Number of Annual Responses: 7,063.

Estimated Completion Time per Response: Varies from 4 hours to 122 hours.

Total Estimated Number of Annual Burden Hours: 127,127 hours.

Respondent's Obligation: Required to Obtain a Benefit.

Frequency of Collection: Annually.

Total Estimated Annual Nonhour Burden Cost: $0.

OMB Control Number 1076–0157

Abstract: We, the Bureau of Indian Affairs (BIA) are proposing to renew an information collection. The ''American Indian Agricultural Resource Management Act,'' (AIARMA), 25 U.S.C. 3701 *et seq.,* authorizes the Secretary of the Interior, in participation with the beneficial owner of the land, to manage Indian agricultural lands in a manner consistent with identified Tribal goals and priorities for conservation, multiple use, sustained yield, and consistent with trust responsibilities. The regulations at 25 CFR 166, Grazing Permits; implement the AIARMA and include the specific information collection requirements. Submission of this information allows individuals or organizations to acquire or modify a grazing permit on Tribal land, individually-owned Indian land, or government land and to meet bonding requirements.

Title of Collection: Grazing Permits.

OMB Control Number: 1076–0157.

Form Number: Form 5–5423—Performance Bond, Form 5–5514—Bid for Grazing Privileges, 5–5515 Grazing Permit, Form 5–5516—Grazing Permit for Organized Tribes, Form 5–5517—Free Grazing Permit, Form 5–5519—Cash Penal Bond, Form 5–5520—Power of Attorney, Form 5–5521—Certificate and Application for On-and-Off Grazing Permit, Form 5522—Modification of Grazing Permit, Form 5–5523—Assignment of Grazing Permit, Form 5–5524—Application for Allocation of Grazing Privileges, 5–5525 Authority to Grant Grazing Privileges on Allotted Lands, Form 5–5528—Livestock Crossing Permit, and Form 5–5529—Removable Range Improvement Records.

Type of Review: Extension of a currently approved collection.

Respondents/Affected Public: Tribes, Tribal organizations, individual Indians, and non-Indian individuals and associations.

Total Estimated Number of Annual Respondents: 7,810.

Total Estimated Number of Annual Responses: 7,810.

Estimated Completion Time per Response: Varies from 20 minutes to one hour, with an average of less than one hour per response.

Total Estimated Number of Annual Burden Hours: 2,701.

Respondent's Obligation: Required to Obtain a Benefit.

Frequency of Collection: Annually.

Total Estimated Annual Nonhour Burden Cost: $0.

OMB Control Number 1076–0161

Abstract: We, the Bureau of Indian Affairs are proposing to renew an information collection. The information submitted by Tribes allows them to participate in planning the development of transportation needs in their area; the information provides data for administration, documenting plans, and for oversight of the program by the Department. Some of the information such as the providing inventory updates (25 CFR 170.444), the development of a long-range transportation plan (25 CFR 170.411 and 170. 412), the development of a Tribal transportation improvement program (25 CFR 170.421), and annual report (25 CFR 170.420) are mandatory to determine how funds will allocated to implement the Tribal Transportation Program.

Title of Collection: Tribal Transportation Program, 25 CFR 170.

OMB Control Number: 1076–0161.

Form Number: None.

Type of Review: Extension of a currently approved collection.

Respondents/Affected Public: Federally recognized Indian Tribes.

Total Estimated Number of Annual Respondents: 281 on average (each year).

Total Estimated Number of Annual Responses: 1,504 on average (each year).

Estimated Completion Time per Response: Varies from 0.5 hours to 40 hours.

Total Estimated Number of Annual Burden Hours: 20,928 hours.

Respondent's Obligation: Some of the information, such as public hearing requirements, is necessary for public notification and involvement (25 CFR 170.437 and 170.438), while other information, such as a request for exception from design standards (25 CFR 170.456), is voluntary.

Frequency of Collection: On occasion.

Total Estimated Annual Nonhour Burden Cost: $0.

OMB Control Number 1076–0167

Abstract: We, the Assistant Secretary—Indian Affairs (AS–IA) are proposing to renew an information collection. Submission of this information is required for federally recognized Indian Tribes to apply for, implement, reassume, or rescind a Tribal Energy Resource Agreement (TERA) that has been entered into under 25 U.S.C. 3501 et. seq., and 25 CFR 224. This collection also requires the Tribe to notify the public of certain actions and allows a petition from the public to be submitted to Interior to inform of possible noncompliance with a TERA.

Title of Collection: Tribal Energy Resource Agreements, 25 CFR 224.

OMB Control Number: 1076–0167.

Form Number: None.

Type of Review: Extension of a currently approved collection.

Respondents/Affected Public: Federally recognized Indian Tribes and the public.

Total Estimated Number of Annual Respondents: 1 on average (each year).

Total Estimated Number of Annual Responses: 11 on average (each year).

Respondent's Obligation: Required to Obtain a Benefit.

Frequency of Collection: On occasion.

Estimated Completion Time per Response: Varies from 32 hours to 432 hours.

Total Estimated Number of Annual Burden Hours: 2,960 hours.

Total Estimated Annual Nonhour Burden Cost: $18,100.

OMB Control Number 1076–0174

Abstract: We, the Bureau of Indian Affairs are proposing to renew an information collection. The Office of Indian Economic Development (OIED) administers and manages the energy resource development grant program under the Energy and Minerals Development Program (EMDP). Congress may appropriate funds to EMDP on a year-to-year basis. When funding is available, OIED may solicit proposals for energy resource development projects from Indian Tribes and Tribal energy resource development organizations for use in carrying out projects to promote the integration of energy resources, and to process, use or develop those energy resources on Indian land. The projects may be in the areas of exploration, assessment, development, feasibility, or market studies. Indian Tribes that would like to apply for an EMDP grant must submit an application. Quarterly reports assist OIED staff with project monitoring of the EMDP program and ensure that projects are making adequate progress in achieving the project's objectives.

Title of Collection: Energy and Mineral Development Program Grants.

OMB Control Number: 1076–0174.

Form Number: None.

Type of Review: Extension of a currently approved collection.

Respondents/Affected Public: Federally recognized Indian Tribes with Indian land.

Total Estimated Number of Annual Respondents: 83 applicants per year; 25 project participants each year.

Total Estimated Number of Annual Responses: 83 per year for applications; 100 per year for progress reports.

Estimated Completion Time per Response: 100 hours per application; 1.5 hours per progress report.

Total Estimated Number of Annual Burden Hours: 8,450 hours (8,300 for applications and 150 for progress reports).

Respondent's Obligation: Required to Obtain or Retain a Benefit.

Frequency of Collection: Once per year for applications; 4 times per year for progress reports.

Total Estimated Annual Nonhour Burden Cost: $0.

OMB Control Number 1076–0180

Abstract: We, the Bureau of Indian Affairs (BIA) are proposing to renew an information collection. Congress passed legislation specifically addressing oil and gas leasing on Osage lands and requiring Secretarial approval of leases. See 34 Stat. 543, section 3, as amended. The regulations art 25 CFR 226 implement that statute by specifying what information a lessee must provide related to drilling, development, and production of oil and gas on Osage reservation land. The oil, gas, and land are assets that the United States holds in trust or restricted status for Indian beneficiaries. The information collections in 25 CFR 226 are necessary to ensure that the beneficial owners of the mineral rights are provided the royalties due them, ensure that the oil and gas trust assets are protected, and to ensure that the surface estate assets are protected.

Title of Collection: Leasing of Osage Reservation lands for Oil and Gas Mining.

OMB Control Number: 1076–0180.

Form Number: None.

Type of Review: Extension of a currently approved collection.

Respondents/Affected Public: Individual Indians, businesses, and Tribal authorities.

Total Estimated Number of Annual Respondents: 1,001.

Total Estimated Number of Annual Responses: 48,539.

Estimated Completion Time per Response: Varies from 15 minutes to eight hours.

Total Estimated Number of Annual Burden Hours: 22,731.

Respondent's Obligation: Required to Obtain a Benefit.

Frequency of Collection: Varies from yearly to monthly.

Total Estimated Annual Nonhour Burden Cost: $4,535.

OMB Control Number 1076–0181

Abstract: We, the Bureau of Indian Affairs (BIA) are proposing to renew an information collection. This information collection is necessary for BIA to authorize rights-of-way to cross land held in trust or restricted status on behalf of individual Indians and tribes, for a specific purpose, including but not limited to building and operating a line or road. The statutory authority for this program is at 25 U.S.C. 323–328. The regulations at 25 CFR 169 implement the statutory authority. BIA uses the information it collects to determine whether or not to grant a right-of-way, the value of the right-of-way, the appropriate compensation due to landowners, the amount of administrative fees that must be levied, and the penalties, if any, that should be assessed for violations of the right-of-way provisions.

Title of Collection: Rights-of-Way on Indian Land.

OMB Control Number: 1076–0181.

Form Number: Right-of-Way Application.

Type of Review: Extension of a currently approved collection.

Respondents/Affected Public: Tribes, Indian landowners and the public.

Total Estimated Number of Annual Respondents: 3,200.

Total Estimated Number of Annual Responses: 3,200.

Estimated Completion Time per Response: Varies from 15 minutes to 35 hours (for the application).

Total Estimated Number of Annual Burden Hours: 39,050.

Respondent's Obligation: Required to Obtain a Benefit.

Frequency of Collection: On occasion.

Total Estimated Annual Nonhour Burden Cost: $1,100,000.

OMB Control Number 1076–0186

Abstract: We, the Bureau of Indian Affairs (BIA) are proposing to renew an information collection. The Indian Child Welfare Act (ICWA or Act), 25 U.S.C. 1901 *et seq.,* imposes certain requirements for child custody proceedings that occur in State court when a child is an ''Indian child.'' The regulations, primarily located in Subpart I of 25 CFR 23, provide procedural guidance for implementing ICWA, which necessarily involves information collections to determine whether the child is Indian, provide notice to the Tribe and parents or Indian custodians, and maintain records. The information collections are conducted during a civil action (*i.e.,* a child custody proceeding). While these civil actions occur in State court, and the U.S. is not a party to the civil action, the civil action is subject to the Federal statutory requirements of ICWA, which the Secretary of the Interior oversees under the Act and general authority to manage Indian affairs under 25 U.S.C. 2 and 9.

Title of Collection: Indian Child Welfare Act (ICWA) Proceedings in State.

OMB Control Number: 1076–0186.

Form Number: None.

Type of Review: Extension of a currently approved collection.

Respondents/Affected Public: Individuals/households and State/Tribal governments.

Total Estimated Number of Annual Respondents: 7,556.

Total Estimated Number of Annual Responses: 98,069.

Estimated Completion Time per Response: Varies from 15 minutes to 12 hours, depending on the activity.

Total Estimated Number of Annual Burden Hours: 301,811.

Respondent's Obligation: Required to Obtain or Retain a Benefit.

Frequency of Collection: On occasion.

Total Estimated Annual Nonhour Burden Cost: $309,955.

OMB Control Number 1076–0191

Abstract: We, the Bureau of Indian Education (BIE) are proposing to renew an information collection. This information collection is necessary to implement the requirements of the Elementary and Secondary Education Act of 1965 (ESEA), as amended by the Every Student Succeeds Act (ESSA). The ESEA requires all schools, including BIE-funded and operated schools, to ensure that all children have a fair, equal, and significant opportunity to obtain a high-quality education and reach, at a minimum, proficiency on challenging academic standards and aligned assessments. In order to accomplish these goals, the Secretary will develop or implement standards, assessments, and an accountability-system requirements for BIE-funded schools. Tribal governing bodies and school boards are able to waive the Secretary's requirements, in part in or whole. However, such entities are required to submit a proposal for alternative requirements for approval by the Secretary and the Secretary of Education prior to implementation of such alternative requirements.

Title of Collection: Standards, Assessments, and Accountability System Waiver.

OMB Control Number: 1076–0191.

Form Number:

Type of Review: Extension of a currently approved collection.

Respondents/Affected Public: Indian Tribes and BIE-funded school boards.

Total Estimated Number of Annual Respondents: 2.

Total Estimated Number of Annual Responses: 2.

Estimated Completion Time per Response: 500 hours.

Total Estimated Number of Annual Burden Hours: 1,000 hours.

Respondent's Obligation: Required to obtain or retain a benefit.

Frequency of Collection: On occasion.

Total Estimated Annual Nonhour Burden Cost: $0.

OMB Control Number 1076–0192

Abstract: We, the Bureau of Indian Education (BIE) are proposing to renew an information collection. The BIE supports efforts to revitalize and maintain Native languages and expand the use of language immersion programs in its schools. The funding opportunity is offered under the authority of the Snyder Act, 25 U.S.C. 13–1, to expend funds appropriated by Congress on Indian education programming. BIE uses the information provided by BIE-funded schools in their application to determine whether they are eligible for the Native language immersion grant and to determine whether the school is using the funding for the stated purpose of promoting Native language immersion programs.

Title of Collection: Native Language Immersion Grant.

OMB Control Number: 1076–0192.

Form Number: SF 424A.

Type of Review: Extension of a currently approved collection.

Respondents/Affected Public: BIE-funded schools.

Total Estimated Number of Annual Respondents: 15.

Total Estimated Number of Annual Responses: 270.

Estimated Completion Time per Response: Varies from 1 to 67 hours, depending on activity.

Total Estimated Number of Annual Burden Hours: 1,335.

Respondent's Obligation: Required to obtain or retain a benefit.

Frequency of Collection: On occasion.

Total Estimated Annual Nonhour Burden Cost: $0.

OMB Control Number 1076–0193

Abstract: We, the Bureau of Indian Education (BIE) are proposing to renew an information collection. The regulations at 25 CFR 273, Subpart E, implement in section 7(c) Contracting Party Student Count Reporting Compliance, of the Johnson-O'Malley Supplemental Indian Education Program Modernization Act (JOM Modernization Act). These regulations require the BIE to implement an annual reporting requirement for existing JOM contractors to report a student count served by each contracting party, and an accounting of the amounts and purposes for which the contract funds were expended. The information received from the annual reporting requirements of the contractor will allow the Secretary to provide an annual report, including the most recent determination of the number of eligible Indian students served by each contracting party, recommendation on appropriate funding levels, and an assessment of the contracts receiving JOM contracts, to the appropriate Committee and Subcommittees in the Senate and of the House of Representatives.

Title of Collection: Johnson O'Malley Student Count Annual Report.

OMB Control Number: 1076–0193.

Form Number: None.

Type of Review: Extension of a currently approved collection.

Respondents/Affected Public: Tribal organizations, States, public school districts, Indian corporations.

Total Estimated Number of Annual Respondents: 312.

Total Estimated Number of Annual Responses: 1,197.

Estimated Completion Time per Response: Ranges from 2 to 80 hours.

Total Estimated Number of Annual Burden Hours: 11,450.

Respondent's Obligation: Required to Obtain a Benefit.

Frequency of Collection: Annually.

Total Estimated Annual Nonhour Burden Cost: $0.

Authority

An agency may not conduct or sponsor and a person is not required to respond to a collection of information unless it displays a currently valid OMB control number. The authority for these ICR actions is the Paperwork Reduction Act of 1995 (44 U.S.C. 3501 *et seq.*).

Steven Mullen,

Information Collection Clearance Officer, Office of Regulatory Affairs and Collaborative, Office of the Assistant Secretary—Indian Affairs.

[FR Doc. 2022–15755 Filed 7–21–22; 8:45 am]

BILLING CODE 4337–15–P

DEPARTMENT OF THE INTERIOR

Bureau of Land Management

[LLAK940000.L14100000.BX0000.223. LXSS001L0100]

Filing of Plats of Survey: Alaska

AGENCY: Bureau of Land Management, Interior.

ACTION: Notice of official filing.

SUMMARY: The plats of survey of lands described in this notice are scheduled to be officially filed in the Bureau of Land Management (BLM), Alaska State Office, Anchorage, Alaska. The surveys, which were executed at the request of the Bureau of Indian Affairs (BIA) and BLM, are necessary for the management of these lands.

DATES: The BLM must receive protests by August 22, 2022.

ADDRESSES: You may buy a copy of the plats from the BLM Alaska Public Information Center, 222 W 7th Avenue, Mailstop 13, Anchorage, AK 99513. Please use this address when filing written protests. You may also view the plats at the BLM Alaska Public Information Center, Fitzgerald Federal Building, 222 W 7th Avenue, Anchorage, Alaska, at no cost.

FOR FURTHER INFORMATION CONTACT: Thomas O'Toole, Chief, Branch of Cadastral Survey, Alaska State Office, Bureau of Land Management, 222 W 7th Avenue, Anchorage, AK 99513; 907–271–4231; *totoole@blm.gov.* People who use a telecommunications device for the deaf may call the Federal Relay Service (FRS) at 1–800–877–8339 to contact the BLM during normal business hours. The FRS is available 24 hours a day, 7 days a week, to leave a message or question with the above individual. You will receive a reply during normal business hours.

SUPPLEMENTARY INFORMATION: The lands surveyed are:

Copper River Meridian, Alaska

Memorandum of cancellation of survey plat of U.S. Survey No. 10239, Officially Filed June 8, 1990, located in T. 13 S., R. 5 W., dated March 25, 2022.

T 13 S., R. 5 W., Memorandum of suspension of survey plat Officially Filed October 24, 1991, dated June 7, 2022.

T. 17 S., R. 5 W., Memorandum of cancellation of survey plat Officially Filed October 24, 1991, dated July 13, 2022.

Fairbanks Meridian, Alaska

T. 3 N., R. 27 E., accepted May 24, 2022.
T. 4 N., R. 27 E., accepted May 27, 2022.
T. 4 N., R. 28 E., accepted May 24, 2022.
T. 1 S., R. 12 W., accepted May 17, 2022.
T. 2 S., R. 12 W., accepted May 17, 2022.
T. 1 S., R. 13 W., accepted May 17, 2022.

Kateel River Meridian, Alaska

T. 6 N., R. 13 E., accepted May 24, 2022.
T. 9 N., R. 13 E., accepted May 24, 2022.
T. 10 N., R. 13 E., accepted May 24, 2022.
T. 11 N., R. 13 E., accepted May 24, 2022.
T. 8 N., R. 14 E., accepted May 24, 2022.
T. 10 N., R. 14 E., accepted May 24, 2022.
T. 11 N., R. 14 E., accepted May 24, 2022.
T. 8 N., R. 15 E., accepted May 24, 2022.
T. 9 N., R. 15 E., accepted May 24, 2022.
T. 10 N., R. 15 E., accepted May 24, 2022.
T. 7 N., R. 16 E., accepted May 24, 2022.
T. 8 N., R. 16 E., accepted May 24, 2022.
T. 7 N., R. 17 E., accepted May 24, 2022.

Seward Meridian, Alaska

T. 11 S., R. 56 W., accepted May 4, 2022.

A person or party who wishes to protest one or more plats of survey identified above must file a written notice of protest with the State Director for the BLM in Alaska. The protest may be filed by mailing to BLM State Director, Alaska State Office, Bureau of Land Management, 222 W 7th Avenue, Anchorage, AK 99513 or by delivering it in person to BLM Alaska Public Information Center, Fitzgerald Federal Building, 222 W 7th Avenue, Anchorage, Alaska. The notice of protest must identify the plat(s) of survey that the person or party wishes to protest. You must file the notice of protest before the scheduled date of official filing for the plat(s) of survey being protested. The BLM will not consider any notice of protest filed after the scheduled date of official filing. A notice of protest is considered filed on the date it is received by the State Director for the BLM in Alaska during regular business hours; if received after regular business hours, a notice of protest will be considered filed the next business day. A written statement of reasons in support of a protest, if not filed with the notice of protest, must be filed with the State Director for the BLM in Alaska within 30 calendar days after the notice of protest is filed.

If a notice of protest against a plat of survey is received prior to the scheduled date of official filing, the official filing of the plat of survey identified in the notice of protest will be stayed pending consideration of the protest. A plat of survey will not be officially filed until the dismissal or resolution of all protests of the plat.

Before including your address, phone number, email address, or other personally identifiable information in a notice of protest or statement of reasons, you should be aware that the documents you submit, including your personally identifiable information, may be made publicly available in their entirety at any time. While you can ask the BLM to withhold your personally identifiable information from public review, we

cannot guarantee that we will be able to do so.

(Authority: 43 U.S.C. chapter 3.)

Thomas O'Toole,

Chief Cadastral Surveyor, Alaska.

[FR Doc. 2022–15655 Filed 7–21–22; 8:45 am]

BILLING CODE 4310–JA–P

DEPARTMENT OF THE INTERIOR

Bureau of Land Management

[LLOR936000–L14400000–ET0000; WAOR–55695.HAG22–0016]

Public Land Order No. 7910; Extension of Public Land Order No. 7533; Withdrawal of National Forest System Land for the Holden Mine Reclamation Project, Washington

AGENCY: Bureau of Land Management, Interior.

ACTION: Public land order.

SUMMARY: This order extends the duration of the withdrawal created by Public Land Order (PLO) No. 7533 for an additional 20-year period. PLO No. 7533 withdrew 1,265 acres of National Forest System lands in the Okanogan-Wenatchee National Forest from location and entry under the United States mining laws for a period of 20 years to protect the Holden Mine Reclamation Project. Under that project, the United States Forest Service is remediating the release of hazardous substances under the Comprehensive Environmental Response, Compensation, and Liability Act, including undertaking infrastructure improvements and capital investments. A **Federal Register** notice published on October 27, 2021, corrected the legal land description and acreage figure (from 1,265 acres to 1,285 acres) stated in PLO No. 7533. The withdrawal extension is necessary to continue protecting the Holden Mine Reclamation Project in Chelan County, Washington. Without the extension, the protection afforded by the withdrawal expires on August 5, 2022.

DATES: This PLO takes effect on August 6, 2022.

FOR FURTHER INFORMATION CONTACT: Luke Poff, Realty Specialist, at telephone (503) 808–6001, by email at *lpoff@blm.gov;* Bureau of Land Management, Oregon/Washington State Office, P.O. Box 2965, Portland, Oregon 97208. The Forest Service can be reached at the Okanogan-Wenatchee National Forest Supervisor's Office, 215 Melody Lane, Wenatchee, WA 98801, (509) 664–9204.

Individuals in the United States who are deaf, deafblind, hard of hearing, or have a speech disability may dial 7–1–1 (TTY, TDD, or Tele Braille) to access telecommunications relay services. Individuals outside the United States should use the relay services offered within their country to make international calls to the point-of-contact in the United States.

SUPPLEMENTARY INFORMATION: The purpose for which the withdrawal was first made requires an extension in order to continue protecting the Holden Mine Reclamation Project and the capital investments associated with it.

Order

By virtue of the authority vested in the Secretary of the Interior by Section 204 of the Federal Land Policy and Management Act of 1976, 43 U.S.C. 1714, it is ordered as follows:

PLO No. 7533 (67 FR 50894), as corrected (86 FR 59422), incorporated herein by reference, which withdrew 1,285 acres of National Forest System lands from location and entry under the United States mining laws (30 U.S.C. chapter 2) to protect the Holden Mine Reclamation Project, is hereby extended for an additional 20-year period.

This withdrawal will expire 20 years from the effective date of this order unless, as a result of a review conducted prior to the expiration date pursuant to Section 204(f) of the Federal Land Policy and Management Act, the Secretary determines that the withdrawal shall be further extended.

(Authority: 43 U.S.C. 1714)

Shannon A. Estenoz,

Assistant Secretary for Fish and Wildlife and Parks.

[FR Doc. 2022–15684 Filed 7–21–22; 8:45 am]

BILLING CODE 3411–15–P

DEPARTMENT OF THE INTERIOR

Bureau of Land Management, Interior

[LLNVB01000.L51100000.GN0000. LVEMF2108010.21X.MO: 4500159219]

Notice of Availability of Draft Environmental Impact Statement for Nevada Vanadium Company Gibellini Mine Project, Eureka County, Nevada

AGENCY: Bureau of Land Management, Interior.

ACTION: Notice of availability.

SUMMARY: In compliance with the National Environmental Policy Act of 1969, as amended (NEPA), and the Federal Land Policy and Management Act of 1976, as amended (FLPMA), the Bureau of Land Management (BLM) announces the availability of the Draft Environmental Impact Statement (EIS) for the proposed Nevada Vanadium Company (NVV) Gibellini Mine Project, in Eureka County, Nevada, and requests the public review and provide comments on the Draft EIS.

DATES: All comments must be received by September 6, 2022. The BLM will announce the date of a public meeting on the Draft EIS at least 15 days in advance of the meeting on the BLM National ePlanning website *https://go.usa.gov/xf2GR.* The public meeting will be held online.

ADDRESSES: The Draft EIS is available for review on the BLM ePlanning project website at *https://go.usa.gov/xf2GR.*

Written comments related to the proposed NVV Gibellini Mine Project, in Eureka County, Nevada, may be submitted by any of the following methods:

- *ePlanning Website: https://go.usa.gov/xf2GR.*
- *Email: BLM_NV_BMDO_P&EC_NEPA@blm.gov.*
- *Mail:* Gibellini Mine EIS c/o BLM Mount Lewis Field Office, 50 Bastian Road, Battle Mountain, NV 89820.

FOR FURTHER INFORMATION CONTACT: Scott Distel, Project Manager, telephone: (775) 635–4093; address: 50 Bastian Road, Battle Mountain, Nevada 89820; email: *sdistel@blm.gov.* Individuals in the United States who are deaf, deafblind, hard of hearing, or have a speech disability may dial 711 (TTY, TDD, or TeleBraille) to access telecommunications relay services. Individuals outside the United States should use the relay services offered within their country to make international calls to the point-of-contact in the United States.

SUPPLEMENTARY INFORMATION:

Purpose and Need for the Proposed Action

The BLM's purpose for the action is to respond to NVV's proposal as described in the proposed Plan of Operations and to analyze the environmental effects associated with the proponent's Proposed Action and alternatives to the Proposed Action. The BLM's need for the action is established by the BLM's responsibilities under FLPMA and the BLM Surface Management Regulations at 43 CFR part 3809 to respond to a proposed Plan of Operations and ensure that operations prevent unnecessary or undue degradation of public lands.

Proposed Action and Alternatives

Under the *Proposed Action,* NVV would construct and operate an open pit mine in the southern extent of the Fish Creek Range. Facilities associated with the Proposed Action include development of an open pit mine, rock disposal area, crushing facilities and stockpile, heap leach pad, process facility, process and make-up water ponds, borrow areas, mine and access roads, water and power supply lines, and ancillary facilities. The estimated Project life consists of one and a half years of construction, seven years of operation, four years of active reclamation and closure, and up to 30 years of post-closure monitoring. In addition, NVV would conduct exploration activities as part of the Proposed Action. The Project Area includes a total of 6,456 acres of BLM-administered land, of which approximately 806 acres of surface disturbance would occur due to Project-related activities.

The *South Access Road Alternative* would include the same mine components as described for the Proposed Action, except the access road would be constructed in a different location. This alternative access road would be approximately seven miles long and extend from County Road M–103 (Duckwater Road) to the Project Area. The access road would be constructed parallel to the power line corridor. Overall, this alternative would result in approximately 38 additional acres of surface disturbance relative to the Proposed Action.

The *Renewable Energy Alternative* would consist of the same overall activities as described for the Proposed Action, except this alternative would include supporting the mine operations with a combination of renewable energy and a utility interconnection with future large-scale battery storage. This alternative would result in approximately 33 additional acres relative to the Proposed Action.

Under the *No Action Alternative,* the Plan of Operations would not be authorized by the BLM, and the activities described in the Proposed Action would not occur. Mineral resources would remain undeveloped, and the construction and operation of the proposed mine and associated facilities would not occur.

Schedule for the Decision-Making Process

The final EIS is tentatively scheduled for Fall of 2022 with a Record of Decision in early 2023.

Draft EIS Review Process

On July 14, 2020, a notice of intent to prepare an EIS was published in the **Federal Register**, announcing the beginning of the public scoping process. Virtual public meetings were held on September 2 and 3, 2020. During the scoping period, 12 comment documents were received containing a total of 216 individual comments. The comments received, in order of decreasing volume, were associated with wildlife and special status species, laws and regulations, water resources, air quality, and uranium management.

This notice of availability initiates the draft EIS review process. A public meeting to discuss the draft EIS will be held via virtual platform. An announcement regarding when and how to access the virtual meeting will be posted on the BLM's project website.

Public review of the draft EIS provides an opportunity for meaningful collaborative public engagement and allows the public to provide substantive comments, such as identification of factual errors, data gaps, relevant methods, or scientific studies. The BLM will respond to substantive comments by making appropriate revisions to the EIS or explaining why a comment did not warrant a change.

The BLM has and will continue to use and coordinate the draft EIS review process to help fulfill the public involvement requirements under the National Historic Preservation Act (54 U.S.C. 306108) as provided in 36 CFR 800.2(d)(3). The information about historic and cultural resources within the area potentially affected by the proposed action will assist the BLM in identifying and evaluating impacts to such resources.

The BLM has and will continue to conduct government-to-government consultation with Indian Tribes in accordance with Executive Order 13175 and other policies. Agencies will give due consideration to Tribal concerns, including impacts on Indian trust assets and treaty rights and potential impacts to cultural resources.

Before including your address, phone number, email address, or other personal identifying information in your comment, you should be aware that your entire comment—including your personal identifying information—may be made publicly available at any time. While you can ask us in your comment to withhold your personal identifying information from public review, we cannot guarantee that we will be able to do so.

(Authority: 40 CFR 1506.6, 40 CFR 1506.10)

Jon Sherve,

Field Manager, Mount Lewis Field Office, Battle Mountain District.

[FR Doc. 2022–15275 Filed 7–21–22; 8:45 am]

BILLING CODE 4310–HC–P

INTERNATIONAL TRADE COMMISSION

[Inv. No. 337–TA–1322]

Certain Rotating 3–D LiDAR Devices, Components Thereof, and Sensing Systems Containing the Same; Institution of Investigation

AGENCY: U.S. International Trade Commission.

ACTION: Notice.

SUMMARY: Notice is hereby given that a complaint was filed with the U.S. International Trade Commission on June 16, 2022, under section 337 of the Tariff Act of 1930, as amended, on behalf of Velodyne Lidar USA, Inc., of San Jose, California. A supplement to the complaint was filed on July 1, 2022. The complaint as supplemented alleges violations of section 337 based upon the importation into the United States, the sale for importation, and the sale within the United States after importation of certain rotating 3–D LiDAR devices, components thereof, and sensing systems containing the same by reason of the infringement of certain claims of U.S. Patent No. 7,969,558 (''the '558 patent'') and U.S. Patent No. 9,983,297 (''the '297 patent''). The complaint further alleges that an industry in the United States exists as required by the applicable Federal Statute. The complainant requests that the Commission institute an investigation and, after the investigation, issue a limited exclusion order and cease and desist orders.

ADDRESSES: The complaint, except for any confidential information contained therein, may be viewed on the Commission's electronic docket (EDIS) at *https://edis.usitc.gov.* For help accessing EDIS, please email *EDIS3Help@usitc.gov.* Hearing impaired individuals are advised that information on this matter can be obtained by contacting the Commission's TDD terminal on (202) 205–1810. Persons with mobility impairments who will need special assistance in gaining access to the Commission should contact the Office of the Secretary at (202) 205–2000. General information concerning the Commission may also be obtained by accessing its internet server at *https://www.usitc.gov.*

FOR FURTHER INFORMATION CONTACT: Pathenia M. Proctor, The Office of Unfair Import Investigations, U.S. International Trade Commission, telephone (202) 205–2560.

SUPPLEMENTARY INFORMATION:

Authority: The authority for institution of this investigation is contained in section 337 of the Tariff Act of 1930, as amended, 19 U.S.C. 1337, and in section 210.10 of the Commission's Rules of Practice and Procedure, 19 CFR 210.10 (2021).

Scope of Investigation: Having considered the complaint, the U.S. International Trade Commission, on July 18, 2022, *ordered that*—

(1) Pursuant to subsection (b) of section 337 of the Tariff Act of 1930, as amended, an investigation be instituted to determine whether there is a violation of subsection (a)(1)(B) of section 337 in the importation into the United States, the sale for importation, or the sale within the United States after importation of certain products identified in paragraph (2) by reason of infringement of one or more of claims 1–4, 6, and 8–25 of the '558 patent and claims 1, 2, 7, 10, 12–13, and 16 of the '297 patent, and whether an industry in the United States exists as required by subsection (a)(2) of section 337;

(2) Pursuant to section 210.10(b)(1) of the Commission's Rules of Practice and Procedure, 19 CFR 210.10(b)(1), the plain language description of the accused products or category of accused products, which defines the scope of the investigation, is ''rotating 3–D LiDAR devices, components thereof (circuit boards with laser emitters and/or photosensitive detectors, a rotatable frame or structure for mounting such circuit boards, motor for providing rotation for the laser emitters and photosensitive detectors, circuitry for controlling operation of the LiDAR, and an orientation detector for the LiDAR), and sensing systems with 3–D scanning capabilities containing the same (autonomous vehicles, advanced driver assistance systems (ADAS), robotics, industrial automation solutions, and intelligent infrastructure solutions, with 3–D scanning capabilities)'';

(3) For the purpose of the investigation so instituted, the following are hereby named as parties upon which this notice of investigation shall be served:

(a) The complainant is:

Velodyne Lidar USA, Inc., 5521 Hellyer Avenue, San Jose, CA 95138

(b) The respondents are the following entities alleged to be in violation of section 337, and are the parties upon which the complaint is to be served:

Ouster, Inc., 350 Treat Avenue, San Francisco, CA 94110

Benchmark Electronics, Inc., 56 S Rockford Dr., Tempe, AZ 85281

(c) The Office of Unfair Import Investigations, U.S. International Trade Commission, 500 E Street SW, Suite 401, Washington, DC 20436; and

(4) For the investigation so instituted, the Chief Administrative Law Judge, U.S. International Trade Commission, shall designate the presiding Administrative Law Judge.

Responses to the complaint and the notice of investigation must be submitted by the named respondents in accordance with section 210.13 of the Commission's Rules of Practice and Procedure, 19 CFR 210.13. Pursuant to 19 CFR 201.16(e) and 210.13(a), as amended in 85 FR 15798 (March 19, 2020), such responses will be considered by the Commission if received not later than 20 days after the date of service by the complainant of the complaint and the notice of investigation. Extensions of time for submitting responses to the complaint and the notice of investigation will not be granted unless good cause therefor is shown.

Failure of a respondent to file a timely response to each allegation in the complaint and in this notice may be deemed to constitute a waiver of the right to appear and contest the allegations of the complaint and this notice, and to authorize the Administrative Law Judge and the Commission, without further notice to the respondent, to find the facts to be as alleged in the complaint and this notice and to enter an initial determination and a final determination containing such findings, and may result in the issuance of an exclusion order or a cease and desist order or both directed against the respondent.

By order of the Commission.

Issued: July 18, 2022.

Katherine Hiner,

Acting Secretary to the Commission.

[FR Doc. 2022–15631 Filed 7–21–22; 8:45 am]

BILLING CODE 7020–02–P

DEPARTMENT OF JUSTICE

Federal Bureau of Investigation

[OMB Number 1110–0043]

Agency Information Collection Activities; Proposed eCollection of eComments Requested; Revision of a Currently Approved Collection

AGENCY: Department of Justice, Federal Bureau of Investigation, Criminal Justice Information Services Division.

ACTION: 60-Day notice.

SUMMARY: The Department of Justice, Federal Bureau of Investigation, Criminal Justice Information Services Division, is submitting the following information collection request to the Office of Management and Budget (OMB) for review and approval in accordance with the Paperwork Reduction Act of 1995.

DATES: The Department of Justice encourages public comment and will accept input until September 20, 2022.

FOR FURTHER INFORMATION CONTACT: If you have additional comments especially on the estimated public burden or associated response time, suggestions, or need a copy of the proposed information collection instrument with instructions or additional information, please contact Gerry Lynn Brovey, Supervisory Information Liaison Specialist, FBI, CJIS, Resources Management Section, Administrative Unit, Module C–2, 1000 Custer Hollow Road, Clarksburg, West Virginia, 26306; phone: 304–625–4320 or email *glbrovey@fbi.gov.*

SUPPLEMENTARY INFORMATION: Written comments and suggestions from the public and affected agencies concerning the proposed collection of information are encouraged. Your comments should address one or more of the following four points:

➢ Evaluate whether the proposed collection of information is necessary for the proper performance of the functions of the Federal Bureau of Investigation, Criminal Justice Information Division, including whether the information will have practical utility;

➢ Evaluate the accuracy of the agency's estimate of the burden of the proposed collection of information, including the validity of the methodology and assumptions used;

➢ Evaluate whether and if so how the quality, utility, and clarity of the information to be collected can be enhanced; and

➢ Minimize the burden of the collection of information on those who

are to respond, including through the use of appropriate automated, electronic, mechanical, or other technological collection techniques or other forms of information technology, *e.g.,* permitting electronic submission of responses.

Overview of This Information Collection

1. *Type of Information Collection:* Revision of a currently approved collection.
2. *The Title of the Form/Collection:* Voluntary Appeal File (VAF) Application Form.
3. *The agency form number, if any, and the applicable component of the Department sponsoring the collection:* 1110–0043 The applicable component within the Department of Justice is the Federal Bureau of Investigation, Criminal Justice Information Services Division.
4. *Affected public who will be asked or required to respond, as well as a brief abstract:* Primary: Potential firearm purchasers. If a potential purchaser is delayed or denied a firearm and successfully appeals the decision, the NICS Section cannot retain a record of the overturned appeal or the supporting documentation. If the record is not able to be updated or the fingerprints are non-identical to a disqualifying record used in the evaluation, the purchaser continues to be delayed or denied, and if that individual appeals the decision, the documentation/information (*e.g.,* fingerprint cards, court records, pardons, etc.) must be resubmitted for every subsequent purchase. The VAF was established per 28 CFR, Part 25.10(g), for this reason. By this process, applicants can voluntarily request the NICS Section maintain information about themselves in the VAF to prevent future extended delays or denials of a firearm transfer.
5. *An estimate of the total number of respondents and the amount of time estimated for an average respondent to respond:* It is estimated the time it takes to read, complete, and upload documents is 30 minutes. Travel time to the fingerprinting facility and post office is not factored in the time estimate. The BSS Section estimates 3,737 respondents yearly.
6. *An estimate of the total public burden (in hours) associated with the collection:* With 3,737 applicants responding, the formula for applicant burden hours would be as follows: (3,737 respondents × .5 hours) = 1,868.5 hours.

If additional information is required contact: Robert Houser, Assistant Director, United States Department of Justice, Justice Management Division, Policy and Planning Staff, Two Constitution Square, 145 N Street NE, 3E.405A, Washington, DC 20530.

Dated: July 19, 2022.

Robert Houser,

Assistant Director, Policy and Planning Staff, U.S. Department of Justice.

[FR Doc. 2022–15751 Filed 7–21–22; 8:45 am]

BILLING CODE 4410–02–P

DEPARTMENT OF LABOR

Employee Benefits Security Administration

Agency Information Collection Activities; Request for Public Comment

AGENCY: Employee Benefits Security Administration (EBSA), Department of Labor.

ACTION: Notice.

SUMMARY: The Department of Labor (the Department), in accordance with the Paperwork Reduction Act, provides the general public and Federal agencies with an opportunity to comment on proposed and continuing collections of information. This helps the Department assess the impact of its information collection requirements and minimize the public's reporting burden. It also helps the public understand the Department's information collection requirements and provide the requested data in the desired format. The Employee Benefits Security Administration (EBSA) is soliciting comments on the proposed extension of the information collection requests (ICRs) contained in the documents described below. A copy of the ICRs may be obtained by contacting the office listed in the **ADDRESSES** section of this notice. ICRs also are available at reginfo.gov (*http://www.reginfo.gov/public/do/PRAMain*).

DATES: Written comments must be submitted to the office shown in the **ADDRESSES** section on or before September 20, 2022.

ADDRESSES: James Butikofer, Department of Labor, Employee Benefits Security Administration, 200 Constitution Avenue NW, Room N–5718, Washington, DC 20210, or *ebsa.opr@dol.gov.*

SUPPLEMENTARY INFORMATION:

I. Current Actions

This notice requests public comment on the Department's request for extension of the Office of Management and Budget's (OMB) approval of ICRs contained in the rules and prohibited transaction exemptions described below. The Department is not proposing any changes to the existing ICRs at this time. An agency may not conduct or sponsor, and a person is not required to respond to, an information collection unless it displays a valid OMB control number. A summary of the ICRs and the burden estimates follows:

Agency: Employee Benefits Security Administration, Department of Labor.

Title: Class Exemption for Certain Transactions Involving Purchase of Securities where Issuer May Use Proceeds to Reduce or Retire Indebtedness to Parties in Interest (PTE 1980–83).

Type of Review: Extension of a currently approved collection of information.

OMB Number: 1210–0064.

Affected Public: Private sector, Businesses or other for-profits.

Respondents: 25.

Responses: 25.

Estimated Total Burden Hours: 15.

Estimated Total Burden Cost (Operating and Maintenance): $0.

Description: Class exemption PTE 80–83, granted on November 4, 1980, allows employee benefit plans to purchase securities, which may aid the issuer of the securities to reduce or retire indebtedness to a party in interest. The principal requirements of the exemption are that the securities must be sold as part of a public offering, and the price paid for the securities must not be in excess of the original offering price. This exemption also provides relief from the prohibited transaction provisions of Section 4975 of the Internal Revenue Code (the Code).

This class exemption allows employee benefit plans to purchase securities that may aid the issuer of the securities to reduce or retire indebtedness to a party in interest. Without the relief provided by the class exemption, a standard type of financial/business transaction between financial service providers and employee benefit plans would be barred under ERISA's prohibited transaction provisions.

In order to take advantage of the relief provided by this class exemption, employee benefit plans must comply with all of the applicable conditions of the exemption, including the requirement to keep records regarding transactions covered by the exemption that are sufficient to establish that the conditions of the exemption have been met. The records must be maintained for a period of at least six years from a covered transaction and must be made unconditionally available at their customary location for examination

during normal business hours by specified interested persons, including plan fiduciaries, participant and beneficiaries, contributing employers, and representatives of the Department and the Internal Revenue Service.

The Department has the authority to request such records from time to time in the course of performing investigations; however, the primary purpose of the recordkeeping condition of the exemption is to ensure access to pertinent records by participants, fiduciaries and contributing employers and thereby enable oversight of compliance with section 408(a)(3) of ERISA, which requires that the Department ensure the protection of participant rights in granting exemptive relief. The Department has received approval from OMB for this ICR under OMB Control No. 1210–0064. The current approval is scheduled to expire on January 31, 2023.

Agency: Employee Benefits Security Administration, Department of Labor.

Title: Petition for Finding under the Employee Retirement Income Security Act Section 3(40).

Type of Review: Extension of a currently approved collection of information.

OMB Number: 1210–0119.

Affected Public: Not for-profit institutions, Businesses or other for-profits.

Respondents: 10.

Responses: 10.

Estimated Total Burden Hours: 50.

Estimated Total Burden Cost (Operating and Maintenance): $42,695.

Description: The ''multiple employer welfare arrangement'' (MEWA) is established and maintained under Section 3(40) of the Employee Retirement Income Security Act of 1974 (ERISA) for the purpose of offering or providing [welfare plan benefits] to the employees of two or more employers, (including one or more self-employed individuals), or their beneficiaries. Under Section 514(b)(6) of ERISA, an employee welfare benefit plan that is a MEWA is generally subject to state insurance law. However, any such plan or other arrangement that is established or maintained under or pursuant to one or more agreements that the Secretary of Labor (the Secretary) finds to be collectively bargained is not subject to state insurance law. Rules, codified at 29 CFR 2570.150, set forth an administrative procedure (''procedural rules'') for obtaining a determination by the Secretary as to whether a particular MEWA that is an employee welfare benefit plan is established or maintained under or pursuant to one or more collective bargaining agreements for purposes of section 3(40) of ERISA. These procedural rules set forth specific criteria in 29 CFR 2510.3–40 that, if met, constitute a finding by the Secretary that a plan is collectively bargained.

To initiate adjudicatory proceedings, an entity is required to file a petition for a determination under Section 3(40) of ERISA with an Administrative Law Judge (ALJ). The petition must identify the parties, describe the basis on which the petition is being filed and the plan in question, provide evidence that the plan satisfies the criteria to be a plan, and include affidavits as to both the competency of the affiant to testify and the facts that allegedly establish the plan as being established under or pursuant to agreements that the Secretary finds to be a collective bargaining agreement.

This collection of information is used by the Department in connection with proceedings to determine whether a plan or other arrangement is established or maintained pursuant to one or more agreements that which the Secretary finds to be a collective bargaining agreement under Section 3(40) of ERISA. The Department has received approval from OMB for this ICR under OMB Control No. 1210–0119. The current approval is scheduled to expire on January 31, 2023.

Title: Notice Requirements of the Health Care Continuation Coverage Provisions.

Type of Review: Extension of a currently approved collection of information.

OMB Number: 1210–0123.

Affected Public: Not for-profit institutions, Businesses or other for-profits.

Respondents: 660,653.

Responses: 18,128,968.

Estimated Total Burden Hours: 0.

Estimated Total Burden Cost (Operating and Maintenance): $37,133,409.

Description: The Consolidated Omnibus Budget Reconciliation Act of 1985 (COBRA) provides that under certain circumstances participants and beneficiaries of group health plans that satisfy the definition of ''qualified beneficiaries'' under COBRA may elect to continue group health coverage temporarily following events known as ''qualifying events'' that would otherwise result in loss of coverage. The Secretary of Labor (the Secretary) has the authority under section 608 of the Employee Retirement Income Security Act of 1974 (ERISA) to prescribe regulations to carry out the provisions of Part 6 of Title I of ERISA.

The Department has issued regulations implementing the Notice Requirements of Section 606 of ERISA (regulations) because the provision of timely and adequate notifications regarding COBRA rights and responsibilities is critical to a qualified beneficiary's ability to obtain health continuation coverage. In addition, in the Department's view, regulatory guidance was necessary to establish clearer standards for administering and processing COBRA notices.

Under the regulatory guidelines, plan administrators are required to distribute notices: a general notice to be distributed to all participants in group health plans subject to COBRA; an employer notice that must be completed by the employer upon the occurrence of a qualifying event; a notice and election form to be sent to a participant upon the occurrence of a qualifying event that might cause the participant to lose group health coverage; an employee notice that may be completed by a qualified beneficiary upon the occurrence of certain qualifying events such as divorce or disability; and, two other notices, one of early termination and the other a notice of unavailability. Also included in the ICR are two model notices that the Department believes will help reduce costs for service providers in preparing and delivering notices to comply with the regulations.

The provision of timely and adequate notifications is critical for the effective exercise of COBRA rights. Failure on the part of a plan administrator to meet notice requirements might result in a qualified beneficiary's losing out on continuation coverage, assessment of fines on a plan administrator, or other adverse consequences. The Department has received approval from OMB for this ICR under OMB Control No. 1210–0123. The current approval is scheduled to expire on January 31, 2023.

Title: Statutory Exemption for Cross-Trading of Securities.

Type of Review: Extension of a currently approved collection of information.

OMB Number: 1210–0130.

Affected Public: Not for-profit institutions, Businesses or other for-profits.

Respondents: 297.

Responses: 2,673.

Estimated Total Burden Hours: 3,104.

Estimated Total Burden Cost (Operating and Maintenance): $13,400.

Description: The Statutory Exemption for Cross-Trading of Securities regulation (29 CFR 2550.408b–19) implements the content requirements for the written cross-trading policies and procedures required under section 408(b)(19)(H) of ERISA, as added by section 611(g) of the Pension Protection

Act of 2006, Public Law 109–280 (the PPA). Section 611(g)(1) of the PPA created a new statutory exemption, added to section 408(b) of ERISA as subsection 408(b)(19), that exempts from the prohibitions of sections 406(a)(1)(A) and 406(b)(2) of ERISA those cross-trading transactions involving the purchase and sale of a security between an account holding assets of a pension plan and any other account managed by the same investment manager, provided that certain conditions are satisfied.

On October 7, 2008, the Department issued final regulations regarding cross-trading policies and procedures (73 FR 58450). The regulation provides that the policies and procedures for cross-trading under the new statutory exemption must: (1) be written in a manner calculated to be understood by the plan fiduciary authorizing cross-trading, (2) be sufficiently detailed to facilitate a periodic review of all cross-trades by a compliance officer designated by the investment manager and a determination by the compliance officer that the cross-trades comply with the investment manager's written cross-trading policies and procedures, (3) include, at a minimum: (a) a statement of general policy which describes the criteria that will be applied by the investment manager in determining that execution of a securities transaction as a cross-trade will be beneficial to both parties to the transaction; (b) a description of how the investment manager will determine the price at which the securities are cross-traded, in a manner that is consistent with 17 CFR 270.17a–7(b) and SEC interpretations thereunder, including the identity of sources used to establish the price; (c) a description of how the investment manager's policies and procedures will mitigate any potentially conflicting division of loyalties and responsibilities to the parties involved in any cross-trade transaction; (d) a requirement that the investment manager allocate cross-trades among accounts participating in the cross-trading program in an objective and equitable manner and a description of the policies and procedures that will be used; (e) the identity of the compliance officer responsible for reviewing the investment manager's compliance with 408(b)(19) of ERISA and its written cross-trading policies and procedures and the compliance officer's qualifications for this position; (f) the steps to be performed by the compliance officer during its periodic review of the investment manager's purchases and sales of securities to ensure compliance with the written cross-trading policies and procedures; and (g) a description of the procedures by which the compliance officer will determine whether the requirements of section 408(b)(19) of ERISA are met.

The statutory exemption requires, as a condition to exemptive relief, that an investment manager's policies and procedures regarding cross-trading be provided in advance to the fiduciary of any plan that is considering agreeing to allow its assets to be managed under the investment manager's cross-trading program. The investment manager is also required, under the statutory exemption, to designate a compliance officer responsible for periodically reviewing the investment manager's cross-trading program to ensure compliance with the investment manager's cross-trading written policies and procedures. The statutory exemption requires the compliance officer to issue an annual report to each plan fiduciary describing the steps performed during the course of the review, the level of compliance, and any specific instances of noncompliance. The exemption does not require any reporting or filing with the Federal government

The information will be used by the plan fiduciary to assess the initial and continued appropriateness of investing plan assets subject to a cross-trading program. The information will enable the plan fiduciary to fulfill its fiduciary duties under the plan and to protect plan assets on behalf of plan participants and beneficiaries. The Department has received approval from OMB for this ICR under OMB Control No. 1210–0130. The current approval is scheduled to expire on January 31, 2023.

Title: Model Employer Children's Health Insurance Program Notice.

Type of Review: Extension of a currently approved collection of information.

OMB Number: 1210–0137.

Affected Public: Businesses or other for-profits, Farms, Not for-profit institutions.

Respondents: 6,197,922.

Responses: 198,845,095.

Estimated Total Burden Hours: 721,891.

Estimated Total Burden Cost (Operating and Maintenance): $17,325,373.

Description: On February 4, 2009, President Obama signed the Children's Health Insurance Program Reauthorization Act of 2009 (CHIPRA, Pub. L. 111–3). Under ERISA section 701(f)(3)(B)(i)(I), Public Health Service Act (PHS) section 2701(f)(3)(B)(i)(I), and section 9801(f)(3)(B)(i)(I) of the Internal Revenue Code, as added by Children's Health Insurance Program Reauthorization Act of 2009 (CHIPRA), an employer that maintains a group health plan in a State that provides medical assistance under a State Medicaid plan under title XIX of the Social Security Act (SSA), or child health assistance under a State child health plan under title XXI of the SSA, in the form of premium assistance for the purchase of coverage under a group health plan, is required to make certain disclosures. Specifically, the employer is required to notify each employee of potential opportunities currently available in the State in which the employee resides for premium assistance under Medicaid and CHIP for health coverage of the employee or the employee's dependents. These notices are referred as ''Employer CHIP Notices.''

ERISA section 701(f)(3)(B)(i)(II) requires the Department of Labor to provide employers with model language for the Employer CHIP Notices to enable them to timely comply with this requirement, which is referred as the ''Model Employer CHIP Notice.'' The model language is required to include information on how an employee may contact the State in which the employee resides for additional information regarding potential opportunities for premium assistance, including how to apply for such assistance.

The Department has received approval from OMB for this ICR under OMB Control No. 1210–0137. The current approval is scheduled to expire on January 31, 2023.

Title: Plan Asset Transactions Determined by In-House Asset Managers under Prohibited Transaction Class Exemption 96–23.

Type of Review: Extension of a currently approved collection of information.

OMB Number: 1210–0145.

Affected Public: Not for-profit institutions, Businesses or other for-profits.

Respondents: 20.

Responses: 20.

Estimated Total Burden Hours: 940.

Estimated Total Burden Cost (Operating and Maintenance): $400,000.

Description: The Department granted PTE 84–14 (49 FR 9494, as corrected 50 FR 41430), a class exemption that permits various parties in interest (as defined in ERISA section 3(14)) to employee benefit plans to engage in transactions involving plan assets if, among other conditions, the assets are managed by a ''qualified professional asset manager'' (QPAM), but still did

not provide relief for transactions involving the assets of plans managed by an in-house asset manager. The Department granted PTE 96–23 (61 FR 15975), Class Exemption for Plan Asset Transactions Determined by In-House Asset Managers. The class exemption permits various parties in interest to employee benefit plans to engage in transactions involving plan assets if, among other requirements, the assets are managed by an in-house asset manager (INHAM).

PTE 96–23 contains requirements for written guidelines between an INHAM and a property manager that an INHAM has retained to act on its behalf. Because it is a customary business practice for agreements related to the investment of plan assets or transactions relating to the leasing of space to be described in writing, no burden was estimated for this provision. The information collection requirements included in this paperwork package for which there is a burden estimate consist of the requirements that the INHAM develop written policies and procedures designed to assure compliance with the conditions of the exemption and have an independent auditor conduct an annual INHAM exemption audit and issue an audit report to each plan.

The written policies and procedures will be used by an independent auditor to determine the INHAM's compliance with the exemption. An independent auditor will conduct an annual exemption audit and make a determination whether the INHAM is in compliance with the written policies and procedures and the objective requirements of the exemption. These information collections are designed to safeguard participants and beneficiaries in plans managed by INHAMS that are involved in transactions covered by the exemption. The exemption does not require any reporting or filing with the Federal government. The Department has received approval from OMB for this ICR under OMB Control No. 1210–0145. The current approval is scheduled to expire on January 31, 2023.

Title: Prohibited Transaction Class Exemption for Certain Transactions Between Investment Companies and Employee Benefit Plans (PTE 1977–4).

Type of Review: Extension of a currently approved collection of information.

OMB Number: 1210–0049.

Affected Public: Not for-profit institutions, Businesses or other for-profits.

Respondents: 846.

Responses: 279,653.

Estimated Total Burden Hours: 23,728.

Estimated Total Burden Cost (Operating and Maintenance): $117,954.

Description: PTE 77–4, which was originally granted on April 8, 1977, exempts from the prohibited transaction restrictions the purchase and sale by an employee benefit plan of shares from a registered, open-end investment company (mutual fund) when a fiduciary of the plan (*e.g.,* an investment manager) is also the investment advisor for the investment company.

Without the class exemption an open-end mutual fund could not sell shares to or purchase shares from a plan when the fiduciary with respect to the plan is also the investment advisor for the mutual fund. Such purchases and sales may serve the interest of the plans, provided that procedures designed to protect the interests of participants and beneficiaries from potential abuse are built into the transactions. Therefore, the exemption requires disclosure of any redemption fees in the current prospectus and the disclosure and approval of investment advisory and other fees by a second fiduciary so that the plan fiduciary can make informed judgments with respect to the prudence of the transactions. In the case of changes to the fee structure, the exemption requires that the second fiduciary be notified of the fee changes and approve in writing the continued purchase, sale, an investment in the shares of the mutual fund. The Department has received approval from OMB for this ICR under OMB Control No. 1210–0049. The current approval is scheduled to expire on February 28, 2023.

Title: Plan Asset Transactions Determined by Independent Qualified Professional Asset Managers under Prohibited Transaction Exemption 1984–14.

Type of Review: Extension of a currently approved collection of information.

OMB Number: 1210–0128.

Affected Public: Businesses or other for-profits.

Respondents: 4,031.

Responses: 4,071.

Estimated Total Burden Hours: 96,774.

Estimated Total Burden Cost (Operating and Maintenance): $40,311,395.

Description: Prohibited Transaction Exemption 84–14 (49 FR 9494, March 13, 1984, as corrected at 50 FR 41430, October 10, 1985, and amended at 70 FR 49305 (August 23, 2005)) (PTE 84–14) permits various parties who are related to employee benefit plans to engage in transactions involving plan assets if, among other conditions, the assets are managed by a ''qualified professional asset manager'' (QPAM). In 2003, the Department published a proposed amendment to the QPAM exemption and based on comments received many financial institutions were unaware that the class exemption did not provide relief for transactions by a QPAM in managing its own plans. On July 6, 2010, the Department adopted a final amendment to PTE 84–14 (75 FR 38837) permitting a QPAM to manage an investment fund that contains the assets of its own plan or the plan of an affiliate of the QPAM.

The information collection requirements that are conditions of Part V of the exemption include written policies and procedures and audit requirements for QPAM-sponsored plans. The written policies and procedures will be used by an independent auditor to determine the QPAM's compliance with the conditions of the exemption. An independent auditor will conduct an annual exemption audit and make a determination whether the QPAM is in compliance with the written policies and procedures and that the conditions of the exemption have been met. These information collections are designed to safeguard participants and beneficiaries in plans that are involved in transactions covered by the exemption. The exemption does not require any reporting or filing with the Federal government. The Department has received approval from OMB for this ICR under OMB Control No. 1210–0128. The current approval is scheduled to expire on February 28, 2023.

Title: Employee Benefit Plan Claims Procedure Under the Employee Retirement Income Security Act.

Type of Review: Extension of a currently approved collection of information.

OMB Number: 1210–0053.

Affected Public: Not for-profit institutions, Businesses or other for-profits.

Respondents: 6,223,774.

Responses: 1,465,526,748.

Estimated Total Burden Hours: 1,627,422.

Estimated Total Burden Cost (Operating and Maintenance): $1,959,351,534.

Description: In November 2000, the Department issued a final regulation establishing minimum claims procedure requirements that all employee benefit plans under ERISA must meet in order to satisfy the requirements of section 503 of ERISA. Section 505 of ERISA authorizes the Secretary to prescribe regulations as appropriate or necessary to carry out the provisions of Title I of

ERISA. The regulation requires plans to provide every claimant who is denied a claim with a written or electronic notice that contains the specific reasons for denial, a reference to the relevant plan provisions on which the denial is based, a description of any additional information necessary to perfect the claim, and a description of steps to be taken if the participant or beneficiary wishes to appeal the denial. The regulation also requires that any adverse decision upon review be in writing (including electronic means) and include specific reasons for the decision, as well as references to relevant plan provisions.

The information collection requirements included in the claims procedure regulation ensure that participants and beneficiaries (claimants) receive adequate information regarding the plan's claims procedures and the plan's handling of specific benefit claims. The Department has received approval from OMB for this ICR under OMB Control No. 1210–0053. The current approval is scheduled to expire on April 30, 2023.

Title: Prohibited Transaction Class Exemption 1992–6: Sale of Individual Life Insurance or Annuity Contracts by a Plan.

Type of Review: Extension of a currently approved collection of information.

OMB Number: 1210–0063.

Affected Public: Businesses or other for-profits.

Respondents: 10,853.

Responses: 10,853.

Estimated Total Burden Hours: 2,171.

Estimated Total Burden Cost (Operating and Maintenance): $6,512.

Description: PTE 92–6 exempts from the prohibited transaction restrictions the sale of individual life insurance or annuity contracts held by an employee benefit plan to: (1) plan participants insured under such contracts; (2) relatives of such participants who are the beneficiaries under the contract, (3) employers, any of whose employees are covered by the plan; (4) other employee benefit plans that have a party in interest relationship; (5) owner-employees (as defined in section 401(c)(3) of the Code), (6) shareholder-employees (as defined in section 1379 of the Internal Revenue Code of 1954 as in effect on the day before the enactment of the Subchapter S Revision Act of 1982), or (7) trusts established by plan participants insured under such contracts or relatives of such participants who are the beneficiaries under the contract, for the cash surrender value of the contracts, provided certain conditions set forth in the class exemption are met.

The disclosure requirement incorporated within this class exemption is intended to protect the rights of plan participants and beneficiaries by putting them on notice of the plan's intention to sell insurance or annuity contracts under which they are insured, and by giving them the right of first refusal to purchase such contracts. Without this disclosure requirement, the Department, which may only grant an exemption if it can find that participants and beneficiaries are protected, would be unable to effectively enforce the terms of the class exemption and ensure user compliance. The Department has received approval from OMB for this ICR under OMB Control No. 1210–0063. The current approval is scheduled to expire on June 30, 2023.

Title: Notice to Employees of Coverage Options Under Fair Labor Standards Act Section 18B.

Type of Review: Extension of a currently approved collection of information.

OMB Number: 1210–0149.

Affected Public: Businesses or other for-profits, Farms, Not for-profit institutions.

Respondents: 7,850,126.

Responses: 32,068,268.

Estimated Total Burden Hours: 116,421.

Estimated Total Burden Cost (Operating and Maintenance): $5,238,964.

Description: Since January 1, 2014, individuals and employees of small businesses have had access to affordable coverage through a new competitive private health insurance market—Health Insurance Marketplace or also called ''the exchange''. Section 1512 of the Affordable Care Act created a new Fair Labor Standards Act (FLSA) section 18B [29 U.S.C. 218b] requiring a notice to employees of coverage options available through the Marketplace.

Section 18B of the FLSA generally provides that, in accordance with regulations promulgated by the Secretary of Labor, an applicable employer must provide each employee at the time of hiring, a written notice: (1) Informing the employee of the existence of Exchanges including a description of the services provided by the Exchanges, and the manner in which the employee may contact Exchanges to request assistance; (2) If the employer plan's share of the total allowed costs of benefits provided under the plan is less than 60 percent of such costs, then the employee may be eligible for a premium tax credit under section 36B of the Internal Revenue Code (the Code) if the employee purchases a qualified health plan through an Exchange; and (3) If the employee purchases a qualified health plan through an Exchange, the employee may lose the employer contribution (if any) to any health benefits plan offered by the employer and that all or a portion of such contribution may be excludable from income for Federal income tax purposes. The Department has received approval from OMB for this ICR under OMB Control No. 1210–0149. The current approval is scheduled to expire on June 30, 2023.

II. Focus of Comments

The Department is particularly interested in comments that:

- Evaluate whether the collections of information are necessary for the proper performance of the functions of the agency, including whether the information will have practical utility;
- Evaluate the accuracy of the agency's estimate of the collections of information, including the validity of the methodology and assumptions used;
- Enhance the quality, utility, and clarity of the information to be collected; and
- Minimize the burden of the collection of information on those who are to respond, including through the use of appropriate automated, electronic, mechanical, or other technological collection techniques or other forms of information technology, *e.g.,* by permitting electronic submissions of responses.

Comments submitted in response to this notice will be summarized and/or included in the ICR for OMB approval of the information collection; they will also become a matter of public record.

Signed at Washington, DC, this 15th day of July, 2022.

Ali Khawar,

Acting Assistant Secretary, Employee Benefits Security Administration, U.S. Department of Labor.

[FR Doc. 2022–15680 Filed 7–21–22; 8:45 am]

BILLING CODE 4510–29–P

DEPARTMENT OF LABOR

Agency Information Collection Activities; Submission for OMB Review; Comment Request; Benefit Rights and Experience Report

ACTION: Notice of availability; request for comments.

SUMMARY: The Department of Labor (DOL) is submitting this Employment and Training Administration (ETA)-

sponsored information collection request (ICR) to the Office of Management and Budget (OMB) for review and approval in accordance with the Paperwork Reduction Act of 1995 (PRA). Public comments on the ICR are invited.

DATES: The OMB will consider all written comments that the agency receives on or before August 22, 2022.

ADDRESSES: Written comments and recommendations for the proposed information collection should be sent within 30 days of publication of this notice to *www.reginfo.gov/public/do/PRAMain.* Find this particular information collection by selecting ''Currently under 30-day Review—Open for Public Comments'' or by using the search function.

Comments are invited on: (1) whether the collection of information is necessary for the proper performance of the functions of the Department, including whether the information will have practical utility; (2) if the information will be processed and used in a timely manner; (3) the accuracy of the agency's estimates of the burden and cost of the collection of information, including the validity of the methodology and assumptions used; (4) ways to enhance the quality, utility and clarity of the information collection; and (5) ways to minimize the burden of the collection of information on those who are to respond, including the use of automated collection techniques or other forms of information technology.

FOR FURTHER INFORMATION CONTACT: Mara Blumenthal by telephone at 202–693–8538, or by email at *DOL_PRA_PUBLIC@dol.gov.*

SUPPLEMENTARY INFORMATION: Section 303(a)(6) of the Social Security Act authorizes this information collection. Eligibility for unemployment insurance benefits requires applicants demonstrate attachment to the labor force. This requirement of labor force attachment is generally measured through the amount of past wages earned. The data in the ETA 218, Benefit Rights and Experience Report, include numbers of individuals who were and were not monetarily eligible, those who were eligible for the maximum benefits, those who were eligible based on classification by potential duration categories, and those who were exhausting their full entitlement as classified by actual duration categories. DOL uses these data to conduct solvency studies, cost estimating and modeling, and in assessment of state benefit formulas. For additional substantive information about this ICR, see the related notice published in the **Federal Register** on January 13, 2022 (87 FR 2185).

This information collection is subject to the PRA. A Federal agency generally cannot conduct or sponsor a collection of information, and the public is generally not required to respond to an information collection, unless the OMB approves it and displays a currently valid OMB Control Number. In addition, notwithstanding any other provisions of law, no person shall generally be subject to penalty for failing to comply with a collection of information that does not display a valid OMB Control Number. *See* 5 CFR 1320.5(a) and 1320.6.

DOL seeks PRA authorization for this information collection for three (3) years. OMB authorization for an ICR cannot be for more than three (3) years without renewal. The DOL notes that information collection requirements submitted to the OMB for existing ICRs receive a month-to-month extension while they undergo review.

Agency: DOL–ETA.

Title of Collection: Benefit Rights and Experience Report.

OMB Control Number: 1205–0177.

Affected Public: State, Local, and Tribal Governments.

Total Estimated Number of Respondents: 55.

Total Estimated Number of Responses: 216.

Total Estimated Annual Time Burden: 108 hours.

Total Estimated Annual Other Costs Burden: $0.

(Authority: 44 U.S.C. 3507(a)(1)(D))

Dated: July 15, 2022.

Mara Blumenthal,

Senior PRA Analyst.

[FR Doc. 2022–15682 Filed 7–21–22; 8:45 am]

BILLING CODE 4510–FW–P

DEPARTMENT OF LABOR

Agency Information Collection Activities; Submission for OMB Review; Comment Request; Trade Adjustment Assistance Program Reserve Funding Request

ACTION: Notice of availability; request for comments.

SUMMARY: The Department of Labor (DOL) is submitting this Employment and Training Administration (ETA)-sponsored information collection request (ICR) to the Office of Management and Budget (OMB) for review and approval in accordance with the Paperwork Reduction Act of 1995 (PRA). Public comments on the ICR are invited.

DATES: The OMB will consider all written comments that the agency receives on or before August 22, 2022.

ADDRESSES: Written comments and recommendations for the proposed information collection should be sent within 30 days of publication of this notice to *www.reginfo.gov/public/do/PRAMain.* Find this particular information collection by selecting ''Currently under 30-day Review—Open for Public Comments'' or by using the search function.

Comments are invited on: (1) whether the collection of information is necessary for the proper performance of the functions of the Department, including whether the information will have practical utility; (2) if the information will be processed and used in a timely manner; (3) the accuracy of the agency's estimates of the burden and cost of the collection of information, including the validity of the methodology and assumptions used; (4) ways to enhance the quality, utility and clarity of the information collection; and (5) ways to minimize the burden of the collection of information on those who are to respond, including the use of automated collection techniques or other forms of information technology.

FOR FURTHER INFORMATION CONTACT: Mara Blumenthal by telephone at 202–693–8538, or by email at *DOL_PRA_PUBLIC@dol.gov.*

SUPPLEMENTARY INFORMATION: Section 236(a)(2)(D) of the Trade Act of 1974, as amended (Act), requires the Secretary to establish procedures for the distribution of funds remaining after the initial distribution under Section 236(a)(2)(B)(i). Section 241 of the Trade Act of 1974, as amended, requires the Secretary of Labor to certify to the Secretary of the Treasury amounts necessary for each cooperating state to provide services and make payments under the Act. As such, states may request reserve funds to cover the costs of training, job search allowances and relocation allowances, employment and case management services, and state administration of these benefits before DOL issues the final distribution of state allocations. Reserve funds are distributed to states in accordance with 20 CFR 618.920 on an as-needed basis in response to requests to provide monies to those states that experience large, unexpected layoffs, or otherwise have financial needs that are not met by their initial allocation. These funds are requested using the Form ETA–9117. For additional substantive information about this ICR, see the related notice published in the **Federal Register** on April 28, 2022 (87 FR 25305).

This information collection is subject to the PRA. A Federal agency generally cannot conduct or sponsor a collection of information, and the public is generally not required to respond to an information collection, unless the OMB approves it and displays a currently valid OMB Control Number. In addition, notwithstanding any other provisions of law, no person shall generally be subject to penalty for failing to comply with a collection of information that does not display a valid OMB Control Number. *See* 5 CFR 1320.5(a) and 1320.6.

DOL seeks PRA authorization for this information collection for three (3) years. OMB authorization for an ICR cannot be for more than three (3) years without renewal. The DOL notes that information collection requirements submitted to the OMB for existing ICRs receive a month-to-month extension while they undergo review.

Agency: DOL–ETA.

Title of Collection: Trade Adjustment Assistance Program Reserve Funding Request.

OMB Control Number: 1205–0275.

Affected Public: State, Local, and Tribal Governments.

Total Estimated Number of Respondents: 25.

Total Estimated Number of Responses: 25.

Total Estimated Annual Time Burden: 50 hours.

Total Estimated Annual Other Costs Burden: $0.

(Authority: 44 U.S.C. 3507(a)(1)(D))

Dated: July 15, 2022.

Mara Blumenthal,

Senior PRA Analyst.

[FR Doc. 2022–15683 Filed 7–21–22; 8:45 am]

BILLING CODE 4510–FN–P

DEPARTMENT OF LABOR

Agency Information Collection Activities; Submission for OMB Review; Comment Request; Unemployment Compensation for Ex-Servicemembers Handbook

ACTION: Notice of availability; request for comments.

SUMMARY: The Department of Labor (DOL) is submitting this Employment and Training Administration (ETA)-sponsored information collection request (ICR) to the Office of Management and Budget (OMB) for review and approval in accordance with the Paperwork Reduction Act of 1995 (PRA). Public comments on the ICR are invited.

DATES: The OMB will consider all written comments that the agency receives on or before August 22, 2022.

ADDRESSES: Written comments and recommendations for the proposed information collection should be sent within 30 days of publication of this notice to *www.reginfo.gov/public/do/PRAMain.* Find this particular information collection by selecting ''Currently under 30-day Review—Open for Public Comments'' or by using the search function.

Comments are invited on: (1) whether the collection of information is necessary for the proper performance of the functions of the Department, including whether the information will have practical utility; (2) if the information will be processed and used in a timely manner; (3) the accuracy of the agency's estimates of the burden and cost of the collection of information, including the validity of the methodology and assumptions used; (4) ways to enhance the quality, utility and clarity of the information collection; and (5) ways to minimize the burden of the collection of information on those who are to respond, including the use of automated collection techniques or other forms of information technology.

FOR FURTHER INFORMATION CONTACT: Mara Blumenthal by telephone at 202–693–8538, or by email at *DOL_PRA_PUBLIC@dol.gov.*

SUPPLEMENTARY INFORMATION: Sections 8521–8523 of Title 5 of the U.S. Code authorize this information collection. State Workforce Agencies (SWAs) administer the Unemployment Compensation for Ex-servicemembers (UCX) program in accordance with the same terms and provisions of the paying State's unemployment insurance laws, which apply to unemployed claimants who worked in the private sector. SWAs must be able to obtain certain information (wage and separation data) about each claimant filing claims for UCX benefits in order to determine their eligibility for benefits. DOL has prescribed a form to enable SWAs to obtain this necessary information from the Military Branches. Form ETA–843 is essential to the UCX claims process, and the frequency of use varies depending upon the circumstances involved. For additional substantive information about this ICR, see the related notice published in the **Federal Register** on February 23, 2022 (87 FR 10247).

This information collection is subject to the PRA. A Federal agency generally cannot conduct or sponsor a collection of information, and the public is generally not required to respond to an information collection, unless the OMB approves it and displays a currently valid OMB Control Number. In addition, notwithstanding any other provisions of law, no person shall generally be subject to penalty for failing to comply with a collection of information that does not display a valid OMB Control Number. *See* 5 CFR 1320.5(a) and 1320.6.

DOL seeks PRA authorization for this information collection for three (3) years. OMB authorization for an ICR cannot be for more than three (3) years without renewal. The DOL notes that information collection requirements submitted to the OMB for existing ICRs receive a month-to-month extension while they undergo review.

Agency: DOL–ETA.

Title of Collection: Unemployment Compensation for Ex-Servicemembers Handbook.

OMB Control Number: 1205–0176.

Affected Public: State, Local, and Tribal Governments.

Total Estimated Number of Respondents: 53.

Total Estimated Number of Responses: 1,908.

Total Estimated Annual Time Burden: 159 hours.

Total Estimated Annual Other Costs Burden: $0.

(Authority: 44 U.S.C. 3507(a)(1)(D))

Dated: July 15, 2022.

Mara Blumenthal,

Senior PRA Analyst.

[FR Doc. 2022–15681 Filed 7–21–22; 8:45 am]

BILLING CODE 4510–FN–P

OFFICE OF MANAGEMENT AND BUDGET

Senior Executive Service Performance Review Board Membership

AGENCY: Office of Management and Budget.

ACTION: Notice.

SUMMARY: The Office of Management and Budget (OMB) publishes the names of the members selected to serve on its Senior Executive Service (SES) Performance Review Board (PRB). This notice supersedes all previous notices of the PRB membership.

DATES: *Applicable:* June 30, 2022.

FOR FURTHER INFORMATION CONTACT: Sarah Whittle Spooner, Assistant Director for Management and Operations, Office of Management and Budget, 725 17th Street NW, Washington, DC 20503, 202–395–4665.

SUPPLEMENTARY INFORMATION: Section 4314(c) of Title 5, U.S.C. requires each agency to establish, in accordance with regulations prescribed by the Office of

Personnel Management, one or more PRBs. The PRB shall review and evaluate the initial appraisal of a senior executive's performance by the supervisor, along with any response by the senior executive, and make recommendations to the final rating authority relative to the performance of the senior executive.

The persons named below have been selected to serve on OMB's PRB.

Rachel L. Wallace, Chief of Staff
David C. Connolly, Chief, Transportation and Services Branch, General Government Programs
Adrienne E. Lucas, Deputy Associate Director for Natural Resources Division
Dominic J. Mancini, Deputy Administrator, Office of Information and Regulatory Affairs
Sara R. Sills, Chief, Medicaid Branch, Health Division
Sarah Whittle Spooner, Assistant Director for Management and Operations

Sarah Whittle Spooner,

Assistant Director for Management and Operations.

[FR Doc. 2022–15645 Filed 7–21–22; 8:45 am]

BILLING CODE 3110–01–P

NATIONAL FOUNDATION ON THE ARTS AND THE HUMANITIES

Institute of Museum and Library Services

Submission for OMB Review, Comment Request, Proposed Collection: State Library Administrative Agency (SLAA) Survey FY 2022–FY 2024

AGENCY: Institute of Museum and Library Services; National Foundation on the Arts and the Humanities.

ACTION: Submission for OMB review, request for comments, collection of information.

SUMMARY: The Institute of Museum and Library Services announces that the following information collection has been submitted to the Office of Management and Budget (OMB) for review and approval in accordance with the Paperwork Reduction Act. This program helps to ensure that requested data can be provided in the desired format, reporting burden (time and financial resources) is minimized, collection instruments are clearly understood, and the impact of collection requirements on respondents can be properly assessed. This notice proposes a new three-year clearance of the IMLS-administered State Library Administrative Agency (SLAA) Survey for FY 2022—FY 2024. A copy of the proposed information collection request can be obtained by contacting the individual listed below in the **FOR FURTHER INFORMATION CONTACT** section of this notice.

DATES: Written comments must be submitted to the office listed in the **ADDRESSES** section below on or before August 21, 2022.

ADDRESSES: Written comments and recommendations for proposed information collection requests should be sent within 30 days of publication of this Notice to *www.reginfo.gov/public/do/PRAMain.* Find this particular information collection request by selecting ''Institute of Museum and Library Services'' under ''Currently Under Review;'' then check ''Only Show ICR for Public Comment'' checkbox. Once you have found this information collection request, select ''Comment,'' and enter or upload your comment and information. Alternatively, please mail your written comments to Office of Information and Regulatory Affairs, *Attn.:* OMB Desk Officer for Education, Office of Management and Budget, Room 10235, Washington, DC 20503, (202) 395–7316.

OMB is particularly interested in comments that help the agency to:

- Evaluate whether the proposed collection of information is necessary for the proper performance of the functions of the agency, including whether the information will have practical utility;
- Evaluate the accuracy of the agency's estimate of the burden of the proposed collection of information, including the validity of the methodology and assumptions used;
- Enhance the quality, utility, and clarity of the information to be collected; and
- Minimize the burden of the collection of information on those who are to respond, including the use of appropriate automated, electronic, mechanical, or other technological collection techniques or other forms of information technology (*e.g.,* permitting electronic submission of responses).

FOR FURTHER INFORMATION CONTACT: Marisa Pelczar, Ph.D., Program Analyst, Office of Research and Evaluation, Institute of Museum and Library Services, 955 L'Enfant Plaza North SW, Suite 4000, Washington, DC 20024–2135. Dr. Pelczar can be reached by telephone at 202–653–4647 or by email at *mpelczar@imls.gov.* Persons who are deaf or hard of hearing (TTY users) may contact IMLS at 202–207–7858 via 711 for TTY-Based Telecommunications Relay Service.

SUPPLEMENTARY INFORMATION:

I. Background

The Institute of Museum and Library Services is the primary source of federal support for the nation's libraries and museums. We advance, support, and empower America's museums, libraries, and related organizations through grant making, research, and policy development. To learn more, visit *www.imls.gov.*

II. Current Actions

Pursuant to Public Law 107–279, the State Library Administrative Agency (SLAA) Survey collects biennial descriptive data on the universe of SLAAs in the United States. SLAAs are the official agencies of each state charged by state law with the extension and development of public library services throughout the state. (20 U.S.C. Chapter 72, § 9122). This survey aims to provide state and federal policymakers with information about SLAAs, including their governance, allied operations, developmental services to libraries and library systems, support of electronic information networks and resources, number and types of outlets, and direct services to the public. Because the FY 2022 collection will not begin until early 2023, we are carrying over the documentation and estimated burden associated with the FY 2020 data. This action is to request a new three-year clearance of the State Library Administrative Agency (SLAA) Survey for FY 2022–FY 2024.

The 60-day Notice was published in the **Federal Register** on May 27, 2022 (87 FR 32195). No comments were received.

Agency: Institute of Museum and Library Services.

Title: State Library Administrative Agencies Survey, FY 2022—2024.

OMB Number: 3137–0072.

Agency Number: 3137.

Respondents/Affected Public: Federal, State, and local governments, State Library Administrative Agencies.

Total Estimated Number of Respondents: 51.

Frequency of Response: Biennially.

Estimated Average Burden Hours per Respondent: 25.

Estimated Total Burden Hours: 1,285.

Total Annual Costs: $37,811.

Total Annual Federal Costs: $307,516.

Dated: July 18, 2022.

Suzanne Mbollo,

Grants Management Specialist, Institute of Museum and Library Services.

[FR Doc. 2022–15665 Filed 7–21–22; 8:45 am]

BILLING CODE 7036–01–P

NATIONAL SCIENCE FOUNDATION

Advisory Committee for Integrative Activities; Notice of Meeting

In accordance with the Federal Advisory Committee Act (Pub. L. 92–463, as amended), the National Science Foundation (NSF) announces the following meeting:

Name and Committee Code: Advisory Committee for Integrative Activities (#1373).

Date and Time: August 16, 2022; 12:00 p.m.–6:00 p.m. (EDT), August 17, 2022; 1:00 p.m.–5:00 p.m. (EDT).

Place: National Science Foundation, 2415 Eisenhower Avenue, Alexandria, VA 22314/Virtual.

Type of Meeting: Closed.

Contact Person: Dr. Jonathan Friedman, Program Director, Office of Integrative Activities/Office of the Director/National Science Foundation, 2415 Eisenhower Avenue, Alexandria, VA 22314; (Email: *jfriedma@nsf.gov*/ Telephone: (703) 292–7475).

Purpose of Meeting: An ad hoc Committee of Visitors will review the Major Research Infrastructure program's administrative processes, including examination of decisions on proposals, reviewer comments, and other relevant materials.

Agenda: Tuesday, August 16—Program Review. Wednesday, August 17—Program Review and Report Writing.

Reason for Closing: The work being reviewed and evaluated includes information of a proprietary or confidential nature, including technical information; and information on personnel. These matters are exempt under 5 U.S.C. 552b(c)(4) and (6) of the Government in the Sunshine Act.

Dated: July 19, 2022.

Crystal Robinson,

Committee Management Officer.

[FR Doc. 2022–15729 Filed 7–21–22; 8:45 am]

BILLING CODE 7555–01–P

NATIONAL SCIENCE FOUNDATION

Agency Information Collection Activities: Comment Request; National Science Foundation (NSF) Polar Media Program Application Form for the Arctic and the U.S. Antarctic Program

AGENCY: National Science Foundation.

ACTION: Notice.

SUMMARY: The National Science Foundation (NSF) is announcing plans to establish this collection. In accordance with the requirements of the Paperwork Reduction Act of 1995, we are providing opportunity for public comment on this action. After obtaining and considering public comment, NSF will prepare the submission requesting Office of Management and Budget (OMB) clearance of this collection for no longer than 3 years.

DATES: Written comments on this notice must be received by September 20, 2022 to be assured consideration. Comments received after that date will be considered to the extent practicable. Send comments to address below.

FOR FURTHER INFORMATION CONTACT: Suzanne H. Plimpton, Reports Clearance Officer, National Science Foundation, 2415 Eisenhower Avenue, Alexandria, Virginia 22314; telephone (703) 292–7556; or send email to *splimpto@nsf.gov.* Individuals who use a telecommunications device for the deaf (TDD) may call the Federal Information Relay Service (FIRS) at 1–800–877–8339, which is accessible 24 hours a day, 7 days a week, 365 days a year (including Federal holidays).

SUPPLEMENTARY INFORMATION:

Title of Collection: National Science Foundation (NSF) Polar Media Program Application Form for the Arctic and the U.S. Antarctic Program (USAP).

OMB Control No.: 3145–New.

Expiration Date of Approval: Not applicable.

Abstract: The purpose of the National Science Foundation (NSF) Polar Media Program is to raise awareness of the United States' scientific and operational activities in the Arctic region and in Antarctica and the Southern Ocean. Members of the media can apply and be selected for the program whose reporting targets these activities and covers multiple media channels that will reach large and targeted audiences. This program supports the *President's Memorandum Regarding Antarctica,* Memorandum 6646, that ''The United States Antarctic Program shall be maintained at a level providing an active and influential presence in Antarctica designed to support the range of U.S. Antarctic interests.''

The NSF Polar Media Program Application Form will collect information from media groups interested in participating in the program in response to an official yearly media call (example of a previous media call: *https://www.nsf.gov/news/news_summ.jsp?cntn_id=295843.*) Information collected will include media contact information (first and last name, occupation, organization and organization website URL and reach, social media channel information, passport number, country, date of issuance, email address, mailing address, and phone number) in addition to organization travel desires, proposal information and specific criteria related to the proposal. Information collected will be the basis of selection for participating in the program.

Respondents: Individuals.

Estimated Number of Annual Respondents: 20.

Burden on the Public: Estimated 45 minutes to fill out the form, including the collection of data to fill in the fields. This information should be readily available for most interested parties. The estimated burden time is 15 hours.

Dated: July 19, 2022.

Suzanne H. Plimpton,

Reports Clearance Officer, National Science Foundation.

[FR Doc. 2022–15753 Filed 7–21–22; 8:45 am]

BILLING CODE 7555–01–P

NUCLEAR REGULATORY COMMISSION

[Docket No. 72–1051; NRC–2018–0052]

Holtec International HI–STORE Consolidated Interim Storage Facility Project

AGENCY: Nuclear Regulatory Commission.

ACTION: Environmental impact statement; issuance.

SUMMARY: The U.S. Nuclear Regulatory Commission (NRC) is issuing its final Environmental Impact Statement (FEIS), NUREG–2237, ''Environmental Impact Statement for the Holtec International's License Application for a Consolidated Interim Storage Fancily for Spent Nuclear Fuel in Lea County, New Mexico.'' Holtec International (Holtec) has requested a license to construct and operate a consolidated interim storage facility (CISF) for spent nuclear fuel (SNF) and Greater-Than-Class C (GTCC) waste, along with a small quantity of mixed oxide (MOX) fuel. The proposed CISF would be located in southeast New Mexico at a site located approximately halfway between the cities of Carlsbad and Hobbs. The proposed action is the issuance of an NRC license authorizing a CISF to store up to 8,680 metric tons of uranium (MTUs) [9,568 short tons] of SNF in 500 canisters for a license period of 40 years.

DATES: The FEIS referenced in this document is available on July 13, 2022.

ADDRESSES: Please refer to Docket ID NRC–2018–0052 when contacting the NRC about the availability of information regarding this document. You may obtain publicly available

information related to this document using any of the following methods:

• *Federal Rulemaking Website:* Go to *https://www.regulations.gov* and search for Docket ID NRC–2018–0052. Address questions about Docket IDs in *Regulations.gov* to Stacy Schumann; telephone: 301–415–0624; email: *Stacy.Schumann@nrc.gov.* For technical questions, contact the individual listed in the ''For Further Information Contact'' section of this document.

• *NRC's Agencywide Documents Access and Management System (ADAMS):* You may obtain publicly available documents online in the ADAMS Public Documents collection at *https://www.nrc.gov/reading-rm/adams.html.* To begin the search, select ''Begin Web-based ADAMS Search.'' For problems with ADAMS, please contact the NRC's Public Document Room (PDR) reference staff at 1–800–397–4209, 301–415–4737, or by email to *PDR.Resource@nrc.gov.* The FEIS is available in ADAMS under Accession No. ML22181B094.

• *NRC's PDR:* You may examine and purchase copies of public documents, by appointment, at the NRC's PDR, Room P1 B35, One White Flint North, 11555 Rockville Pike, Rockville, Maryland 20852. To make an appointment to visit the PDR, please send an email to *PDR.Resource@nrc.gov* or call 1–800–397–4209 or 301–415–4737, between 8:00 a.m. and 4:00 p.m. Eastern Time (ET), Monday through Friday, except Federal holidays.

• *Project Web Page:* Information related to the Holtec CISF project can be accessed on the NRC's project web page at *https://www.nrc.gov/waste/spent-fuel-storage/cis/holtec-international.html.* Scroll down to the Section ''Environmental Impact Statement''

• *Public Libraries:* A copy of the FEIS will be made available at the following public libraries:

Carlsbad Public Library, 101 S Halaqueno Street, Carlsbad, NM 88220

Roswell Public Library, 301 N Pennsylvania, Roswell, NM 88201

Hobbs Public Library, 509 N Shipp Street, Hobbs, NM 88240

FOR FURTHER INFORMATION CONTACT: Jill S. Caverly, Office of Nuclear Material Safety and Safeguards, U.S. Nuclear Regulatory Commission, Washington, DC 20555–0001, telephone: 301–415–7674, email: *Jill.Caverly@nrc.gov.*

SUPPLEMENTARY INFORMATION:

I. Background

In accordance with section 51.118 of title 10 of the *Code of Federal Regulations* (10 CFR) ''Final environmental impact statement—notice of availability,'' the NRC is making available NUREG–2237, which concerns the NRC's FEIS for the license application submitted by Holtec to construct and operate a CISF for SNF and GTCC waste, along with a small quantity of MOX fuel, which are collectively referred to in the EIS as SNF and composed primarily of spent uranium-based fuel. The NRC published notice of the draft EIS in the **Federal Register** on March 20, 2020 (85 FR 16150), and the U.S. Environmental Protection Agency noticed the availability of the draft EIS on March 20, 2020 (85 FR 16093). The public comment period on the draft EIS ended on September 22, 2020, and the comments received are addressed in the FEIS. The FEIS is available as indicated in the **ADDRESSES** section of this document.

II. Discussion

The NRC is issuing the FEIS for an application from Holtec requesting a license to authorize construction and operation of a CISF for SNF at a site located approximately halfway between Carlsbad and Hobbs, New Mexico. The proposed CISF project would be built and operated on approximately 421 hectares (ha) [1,040 acres (ac)] of land in Lea County, New Mexico. The storage and operations area, which is a smaller land area within the full property boundary, would include 134 ha [330 ac] of disturbed land. The proposed project area is approximately 51 kilometers (km) [32 miles (mi)] east of Carlsbad, New Mexico, and 54 km [34 mi] west of Hobbs, New Mexico. The proposed action is the issuance of an NRC license authorizing a CISF to store up to 8,680 MTUs [9,568 short tons] of SNF in 500 canisters for a period of 40 years.

The FEIS is being issued as part of the NRC's process to decide whether to issue a license to Holtec pursuant to 10 CFR part 72. In this FEIS, the NRC staff has assessed the potential environmental impacts to construct and operate the proposed CISF. The NRC staff assessed the impacts of the proposed action and the No-Action alternative on land use; transportation; geology and soils; water resources; ecological resources; air quality; noise; historical and cultural resources; visual and scenic resources; socioeconomics; environmental justice, public and occupational health, and waste management. Additionally, the FEIS analyzes and compares the benefits and costs of the proposed action and the No-Action alternative. In preparing this FEIS, the NRC staff also considered, evaluated, and addressed the public comments received on the draft EIS. Appendix D of the FEIS summarizes the public comments received and the NRC's responses.

After comparing the impacts of the proposed action to those of the No-Action alternative, the NRC staff, in accordance with the requirements in 10 CFR part 51, recommends the proposed action, subject to the determinations in the staff's safety review of the application. This recommendation is based on (i) the Holtec license application, which includes an environmental report and supplemental documents, and Holtec's responses to the NRC staff's requests for additional information; (ii) the NRC staff's consultation with Federal, State, Tribal, local agencies, and input from other stakeholders, including members of the public; (iii) the NRC staff's independent review; and (iv) the NRC staff's assessments provided in the FEIS.

Dated: July 14, 2022.

For the Nuclear Regulatory Commission.

John M. Moses,

Deputy Director, Division of Rulemaking, Environmental, and Financial Support, Office of Nuclear Material Safety, and Safeguards.

[FR Doc. 2022–15432 Filed 7–21–22; 8:45 am]

BILLING CODE 7590–01–P

NUCLEAR REGULATORY COMMISSION

[NRC–2020–0192]

Consolidated Decommissioning Guidance, Characterization, Survey, and Determination of Radiological Criteria

AGENCY: Nuclear Regulatory Commission.

ACTION: NUREG; issuance.

SUMMARY: The U.S. Nuclear Regulatory Commission (NRC) is issuing NUREG–1757, Volume 2, Revision 2, ''Consolidated Decommissioning Guidance, Characterization, Survey, and Determination of Radiological Criteria.'' NUREG–1757 has been revised to address lessons learned and experience gained from review of license termination plans, decommissioning plans, and final status surveys for licensees undergoing license termination since the last revision to the document in September 2006. This NUREG is intended for use by applicants, licensees, and the NRC staff.

DATES: NUREG–1757, Volume 2, Revision 2 is available on July 22, 2022.

ADDRESSES: Please refer to Docket ID NRC–2020–0192 when contacting the NRC about the availability of information regarding this document. You may obtain publicly available information related to this document using any of the following methods:

- *Federal Rulemaking Website:* Go to *https://www.regulations.gov* and search for Docket ID NRC–2020–0192. Address questions about Docket IDs in *Regulations.gov* to Stacy Schumann; telephone: 301–415–0624; email: *Stacy.Schumann@nrc.gov.* For technical questions, contact the individual listed in the **FOR FURTHER INFORMATION CONTACT** section of this document.
- *NRC's Agencywide Documents Access and Management System (ADAMS):* You may obtain publicly available documents online in the ADAMS Public Documents collection at *https://www.nrc.gov/reading-rm/adams.html.* To begin the search, select ''Begin Web-based ADAMS Search.'' For problems with ADAMS, please contact the NRC's Public Document Room (PDR) reference staff at 1–800–397–4209, 301–415–4737, or by email to *PDR.Resource@nrc.gov.* The ADAMS accession number for each document referenced (if it is available in ADAMS) is provided the first time that it is mentioned in this document.
- *NRC's PDR:* You may examine and purchase copies of public documents, by appointment, at the NRC's PDR, Room P1 B35, One White Flint North, 11555 Rockville Pike, Rockville, Maryland 20852. To make an appointment to visit the PDR, please send an email to *PDR.Resource@nrc.gov* or call 1–800–397–4209 or 301–415–4737, between 8:00 a.m. and 4:00 p.m. Eastern Time (ET), Monday through Friday, except Federal holidays.

FOR FURTHER INFORMATION CONTACT: Cynthia Barr, Office of Nuclear Material Safety and Safeguards; U.S. Nuclear Regulatory Commission, Washington, DC 20555–0001; telephone: 301–415–4015; email: *Cynthia.Barr@nrc.gov.*

SUPPLEMENTARY INFORMATION:

I. Discussion

NUREG–1757, Volume 2, Revision 2 ''Consolidated Decommissioning Guidance, Characterization, Survey, and Determination of Radiological Criteria'' (ML22194A859) was revised to address lessons learned and experience gained from review of license termination plans, decommissioning plans, and final status surveys for licensees undergoing license termination. The NUREG was updated to include new guidance related to dose modeling, as low as reasonably achievable criteria, surface water and groundwater characterization, use of engineered barriers, and radiological surveys (*e.g.,* composite sampling, subsurface surveys, and surveys demonstrating indistinguishability from background).

Following issuance of NUREG–1757, Volume 2, Revision 2, NRC staff intends to develop interim staff guidance to address issues raised during the public comment period related to: (i) subsurface investigations; and guidance or communications related to (ii) discrete radioactive particles. NRC staff held two subsurface investigations workshops on July 14–15, 2021, and May 11, 2022, to support the development of interim staff guidance. A public workshop to support development of guidance or communications on discrete radioactive particles is planned for November 3, 2022. Additional details regarding the November 3, 2022, workshop, will be forthcoming.

The regulatory analysis for Revision 2 of NUREG–1757, ''Consolidated Decommissioning Guidance,'' Volume 2, ''Characterization, Survey, and Determination of Radiological Criteria'' is available in ADAMS under ML21347A957.

II. Additional Information

Draft NUREG–1757, Volume 2, Revision 2 ''Consolidated Decommissioning Guidance, Characterization, Survey, and Determination of Radiological Criteria'' was published in the **Federal Register** (85 FR 79044) on December 8, 2020, with a 60-day comment period. On January 22, 2021, (86 FR 6683) the NRC decided to extend the comment period until April 8, 2021. Over 200 comments were received on the draft document and the NRC staff's evaluation and resolution of the public comments are documented in ADAMS under ML21299A032. NRC staff addressed the public comments in the final version of the document.

III. Congressional Review Act

NUREG–1757, Volume 2, Revision 2, is a rule as defined in the Congressional Review Act (5 U.S.C. 801–808). However, the Office of Management and Budget has not found it to be a major rule as defined in the Congressional Review Act. The Congressional Review Act Summary is available in ADAMS under ML21349B406.

For the Nuclear Regulatory Commission.

Dated: July 18, 2022.

Ashley B. Roberts,

Deputy Director, Division of Decommissioning, Uranium Recovery, and Waste Programs, Office of Nuclear Material Safety and Safeguards.

[FR Doc. 2022–15646 Filed 7–21–22; 8:45 am]

BILLING CODE 7590–01–P

NUCLEAR REGULATORY COMMISSION

[NRC–2021–0180]

Information Collection: NRC Form 664, ''General Licensee Registration''

AGENCY: Nuclear Regulatory Commission.

ACTION: Notice of submission to the Office of Management and Budget; request for comment.

SUMMARY: The U.S. Nuclear Regulatory Commission (NRC) has recently submitted a request for renewal of an existing collection of information to the Office of Management and Budget (OMB) for review. The information collection is entitled, NRC Form 664, ''General Licensee Registration.''

DATES: Submit comments by August 22, 2022. Comments received after this date will be considered if it is practical to do so, but the Commission is able to ensure consideration only for comments received on or before this date.

ADDRESSES: Written comments and recommendations for the proposed information collection should be sent within 30 days of publication of this notice to *https://www.reginfo.gov/public/do/PRAMain.* Find this particular information collection by selecting ''Currently under Review—Open for Public Comments'' or by using the search function.

FOR FURTHER INFORMATION CONTACT: David C. Cullison, NRC Clearance Officer, U.S. Nuclear Regulatory Commission, Washington, DC 20555–0001; telephone: 301–415–2084; email: *Infocollects.Resource@nrc.gov.*

SUPPLEMENTARY INFORMATION:

I. Obtaining Information and Submitting Comments

A. Obtaining Information

Please refer to Docket ID NRC–2021–0180 when contacting the NRC about the availability of information for this action. You may obtain publicly available information related to this action by any of the following methods:

- *Federal Rulemaking Website:* Go to *https://www.regulations.gov* and search for Docket ID NRC–2021–0180.

• *NRC's Agencywide Documents Access and Management System (ADAMS):* You may obtain publicly available documents online in the ADAMS Public Documents collection at *https://www.nrc.gov/reading-rm/adams.html.* To begin the search, select ''Begin Web-based ADAMS Search.'' For problems with ADAMS, please contact the NRC's Public Document Room (PDR) reference staff at 1–800–397–4209, 301–415–4737, or by email to *PDR.Resource@nrc.gov.* The final supporting statement and NRC Form 664 are available in ADAMS under Accession Nos. ML22139A336 and ML22020A155.

• *NRC's PDR:* You may examine and purchase copies of public documents, by appointment, at the NRC's PDR, Room P1 B35, One White Flint North, 11555 Rockville Pike, Rockville, Maryland 20852. To make an appointment to visit the PDR, please send an email to *PDR.Resource@nrc.gov* or call 1–800–397–4209 or 301–415–4737, between 8:00 a.m. and 4:00 p.m. Eastern Time (ET), Monday through Friday, except Federal holidays.

• *NRC's Clearance Officer:* A copy of the collection of information and related instructions may be obtained without charge by contacting the NRC's Clearance Officer, David C. Cullison, Office of the Chief Information Officer, U.S. Nuclear Regulatory Commission, Washington, DC 20555–0001; telephone: 301–415–2084; email: *Infocollects.Resource@nrc.gov.*

B. Submitting Comments

Written comments and recommendations for the proposed information collection should be sent within 30 days of publication of this notice to *https://www.reginfo.gov/public/do/PRAMain.* Find this particular information collection by selecting ''Currently under Review—Open for Public Comments'' or by using the search function.

The NRC cautions you not to include identifying or contact information in comment submissions that you do not want to be publicly disclosed in your comment submission. All comment submissions are posted at *https://www.regulations.gov* and entered into ADAMS. Comment submissions are not routinely edited to remove identifying or contact information.

If you are requesting or aggregating comments from other persons for submission to the OMB, then you should inform those persons not to include identifying or contact information that they do not want to be publicly disclosed in their comment submission. Your request should state that comment submissions are not routinely edited to remove such information before making the comment submissions available to the public or entering the comment into ADAMS.

II. Background

Under the provisions of the Paperwork Reduction Act of 1995 (44 U.S.C. Chapter 35), the NRC recently submitted a request for renewal of an existing collection of information to OMB for review entitled, NRC Form 664, ''General Licensee Registration.'' The NRC hereby informs potential respondents that an agency may not conduct or sponsor, and that a person is not required to respond to, a collection of information unless it displays a currently valid OMB control number.

The NRC published a **Federal Register** notice with a 60-day comment period on this information collection on February 18, 2022 (87 FR 9396).

1. *The title of the information collection:* NRC Form 664, ''General Licensee Registration.''
2. *OMB approval number:* 3150–0198.
3. *Type of submission:* Extension.
4. *The form number, if applicable:* NRC Form 664.
5. *How often the collection is required or requested:* Annually.
6. *Who will be required or asked to respond:* General licensees who possess registerable quantities of byproduct material.
7. *The estimated number of annual responses:* 409.
8. *The estimated number of annual respondents:* 460.
9. *The estimated number of hours needed annually to comply with the information collection requirement or request:* 136.
10. *Abstract:* NRC Form 664 is used by NRC general licensees to make reports regarding certain generally licensed devices subject to annual registration. The registration program allows NRC to better track general licensees, so that they can be contacted or inspected as necessary, and to make sure that generally licensed devices can be identified even if lost or damaged. Also, the registration program ensures that general licensees are aware of and understand the requirements for the possession, use, and disposal of devices containing byproduct material. Greater awareness helps to ensure that general licensees will comply with the regulatory requirements for proper handling and disposal of generally licensed devices and would reduce the potential for incidents that could result in unnecessary radiation exposure to the public and contamination of property.

Dated: July 19, 2022.

For the Nuclear Regulatory Commission.

David C. Cullison,

NRC Clearance Officer, Office of the Chief Information Officer.

[FR Doc. 2022–15721 Filed 7–21–22; 8:45 am]

BILLING CODE 7590–01–P

NUCLEAR REGULATORY COMMISSION

[NRC–2022–0026]

Information Collection: Rules of General Applicability to Domestic Licensing of Byproduct Material

AGENCY: Nuclear Regulatory Commission.

ACTION: Renewal of existing information collection; request for comment.

SUMMARY: The U.S. Nuclear Regulatory Commission (NRC) invites public comment on the renewal of Office of Management and Budget (OMB) approval for an existing collection of information. The information collection is entitled, ''Rules of General Applicability to Domestic Licensing of Byproduct Material.''

DATES: Submit comments by September 20, 2022. Comments received after this date will be considered if it is practical to do so, but the Commission is able to ensure consideration only for comments received on or before this date.

ADDRESSES: You may submit comments by any of the following methods; however, the NRC encourages electronic comment submission through the Federal rulemaking website:

• *Federal rulemaking website:* Go to *https://www.regulations.gov* and search for Docket ID NRC–2022–0026. Address questions about Docket IDs in *Regulations.gov* to Stacy Schumann; telephone: 301–415–0624; email: *Stacy.Schumann@nrc.gov.* For technical questions, contact the individual listed in the **FOR FURTHER INFORMATION CONTACT** section of this document.

• *Mail comments to:* David C. Cullison, Office of the Chief Information Officer, Mail Stop: T–6 A10M, U.S. Nuclear Regulatory Commission, Washington, DC 20555–0001.

For additional direction on obtaining information and submitting comments, see ''Obtaining Information and Submitting Comments'' in the **SUPPLEMENTARY INFORMATION** section of this document.

FOR FURTHER INFORMATION CONTACT: David C. Cullison, Office of the Chief Information Officer, U.S. Nuclear Regulatory Commission, Washington, DC 20555–0001; telephone: 301–415–2084; email: *Infocollects.Resource@nrc.gov.*

SUPPLEMENTARY INFORMATION:

I. Obtaining Information and Submitting Comments

A. Obtaining Information

Please refer to Docket ID NRC–2022–0026 when contacting the NRC about the availability of information for this action. You may obtain publicly available information related to this action by any of the following methods:

• *Federal Rulemaking Website:* Go to *https://www.regulations.gov* and search for Docket ID NRC–2022–0026.

• *NRC's Agencywide Documents Access and Management System (ADAMS):* You may obtain publicly available documents online in the ADAMS Public Documents collection at *https://www.nrc.gov/reading-rm/adams.html.* To begin the search, select ''Begin Web-based ADAMS Search.'' For problems with ADAMS, please contact the NRC's Public Document Room (PDR) reference staff at 1–800–397–4209, 301–415–4737, or by email to *PDR.Resource@nrc.gov.* The draft supporting statement is available in ADAMS under Accession No. ML22078A003.

• *NRC's PDR:* You may examine and purchase copies of public documents, by appointment, at the NRC's PDR, Room P1 B35, One White Flint North, 11555 Rockville Pike, Rockville, Maryland 20852. To make an appointment to visit the PDR, please send an email to *PDR.Resource@nrc.gov* or call 1–800–397–4209 or 301–415–4737, between 8:00 a.m. and 4:00 p.m. Eastern Time (ET), Monday through Friday, except Federal holidays.

• *NRC's Clearance Officer:* A copy of the collection of information and related instructions may be obtained without charge by contacting the NRC's Clearance Officer, David Cullison, Office of the Chief Information Officer, U.S. Nuclear Regulatory Commission, Washington, DC 20555–0001; telephone: 301–415–2084; email: *Infocollects.Resource@nrc.gov.*

B. Submitting Comments

The NRC encourages electronic comment submission through the Federal rulemaking website (*https://www.regulations.gov*). Please include Docket ID NRC–2022–0026 in your comment submission.

The NRC cautions you not to include identifying or contact information in comment submissions that you do not want to be publicly disclosed in your comment submission. All comment submissions are posted at *https://www.regulations.gov* and entered into ADAMS. Comment submissions are not routinely edited to remove identifying or contact information.

If you are requesting or aggregating comments from other persons for submission to the OMB, then you should inform those persons not to include identifying or contact information that they do not want to be publicly disclosed in their comment submission. Your request should state that comment submissions are not routinely edited to remove such information before making the comment submissions available to the public or entering the comment into ADAMS.

II. Background

In accordance with the Paperwork Reduction Act of 1995 (44 U.S.C. Chapter 35), the NRC is requesting public comment on its intention to request the OMB's approval for the information collection summarized below.

1. *The title of the information collection:* Part 30 of title 10 of the *Code of Federal Regulations* (10 CFR) ''Rules of General Applicability to Domestic Licensing of Byproduct Material.''

2. *OMB approval number:* 3150–0017.

3. *Type of submission:* Extension.

4. *The form number, if applicable:* Not applicable.

5. *How often the collection is required or requested:* Required reports are collected and evaluated on a continuing basis as events occur. There is a onetime submittal of information to receive a license. Renewal applications are submitted every 15 years. Information submitted in previous applications may be referenced without being resubmitted. In addition, recordkeeping must be performed on an ongoing basis.

6. *Who will be required or asked to respond:* All persons applying for or holding a license to manufacture, produce, transfer, receive, acquire, own, possess, or use radioactive byproduct material.

7. *The estimated number of annual responses:* 144,734 (17,445 NRC Licensee responses [1,049 reporting responses + 2,200 for recordkeepers + 14,196 third-party disclosures] and (127,289 Agreement State Licensee responses [7,658 reporting responses + 16,000 for recordkeepers + 103,631 third-party disclosures]).

8. *The estimated number of annual respondents:* 18,200 (2,200 NRC Licensees and 16,000 Agreement State Licensees).

9. *The estimated number of hours needed annually to comply with the information collection requirement or request:* 229,100 hours (113,042 reporting hours + 103,708 recordkeeping hours + 12,350 third-party disclosure hours).

10. *Abstract:* 10 CFR part 30 establishes requirements that are applicable to all persons in the United States governing domestic licensing of radioactive byproduct material. The application, reporting and recordkeeping requirements are necessary to permit the NRC to make a determination whether the possession, use, and transfer of byproduct material is in conformance with the Commission's regulations for protection of the public health and safety.

III. Specific Requests for Comments

The NRC is seeking comments that address the following questions:

1. Is the proposed collection of information necessary for the NRC to properly perform its functions? Does the information have practical utility?

2. Is the estimate of the burden of the information collection accurate?

3. Is there a way to enhance the quality, utility, and clarity of the information to be collected?

4. How can the burden of the information collection on respondents be minimized, including the use of automated collection techniques or other forms of information technology?

Dated: July 19, 2022.

For the Nuclear Regulatory Commission.

David C. Cullison,

NRC Clearance Officer, Office of the Chief Information Officer.

[FR Doc. 2022–15722 Filed 7–21–22; 8:45 am]

BILLING CODE 7590–01–P

NUCLEAR REGULATORY COMMISSION

[Docket Nos. 50–255–LT–2, 50–155–LT–2, 72–007–LT, and 72–043–LT–2; ASLBP No. 22–974–01–LT–BD01]

Entergy Nuclear Operations, Inc., Entergy Nuclear Palisades, LLC, Holtec International, and Holtec Decommissioning International, LLC (Palisades Nuclear Plant and Big Rock Point Site); Establishment of Atomic Safety and Licensing Board

Pursuant to the Commission's regulations, *see, e.g.,* 10 CFR 2.104, 2.105, 2.300, 2.309, 2.313, 2.318, and 2.321, and in accordance with Commission Memorandum and Order CLI–22–08 issued on July 15, 2022, notice is hereby given that an Atomic Safety and Licensing Board (Board), consisting of a single administrative judge serving as Presiding Officer, is being appointed for the purpose of compiling the hearing record, ruling on

motions related to developing the factual record, presiding at any oral hearing, and certifying the completed record to the Commission in the following license transfer proceeding:

Entergy Nuclear Operations, Inc., Entergy Nuclear Palisades, LLC, Holtec International, and Holtec Decommissioning International, LLC (Palisades Nuclear Plant and Big Rock Point Site)

This proceeding concerns a license transfer application involving (1) the renewed facility operating license for the Palisades Nuclear Plant (Palisades) and the general license for the Palisades Independent Spent Fuel Storage Installation (ISFSI); and (2) the facility operating license for Big Rock Point and the general license for the Big Rock Point ISFSI. Entergy Nuclear Operations, Inc., Entergy Nuclear Palisades, LLC, Holtec International, and Holtec Decommissioning International, LLC (HDI) seek NRC consent to the indirect transfer of control of the licenses to Holtec International and to the transfer of operating authority to HDI to conduct licensed activities at the sites. They also seek NRC approval of conforming administrative license amendments to reflect the requested transfers.

In CLI–22–08, the Commission stated, *inter alia,* that (1) the hearing shall be limited to the four issues specified in CLI–22–08; (2) the Presiding Officer should endeavor to adhere to the Model Milestones to the extent practicable; and (3) the Presiding Officer shall certify the hearing record to the Commission within twenty-five days of the conclusion of the hearing. *See* CLI–22–08, slip op. at 133–36.

The administrative judge who will serve as Presiding Officer is: Paul S. Ryerson, Atomic Safety and Licensing Board Panel, U.S. Nuclear Regulatory Commission, Washington, DC 20555–0001.

All correspondence, documents, and other materials shall be filed in accordance with the NRC E-Filing rule, 10 CFR 2.302.

Rockville, Maryland.

Dated: July 18, 2022.

Edward R. Hawkens,

Chief Administrative Judge, Atomic Safety and Licensing Board Panel.

[FR Doc. 2022–15664 Filed 7–21–22; 8:45 am]

BILLING CODE 7590–01–P

SECURITIES AND EXCHANGE COMMISSION

[Release No. 34–95310; File No. SR–PEARL–2022–27]

Self-Regulatory Organizations: MIAX PEARL, LLC; Notice of Filing and Immediate Effectiveness of a Proposed Rule Change To Amend Exchange Rule 2613, Usage of Data Feeds

July 18, 2022.

Pursuant to the provisions of Section 19(b)(1) of the Securities Exchange Act of 1934 (''Act'') [1] and Rule 19b–4 thereunder,[2] notice is hereby given that on July 7, 2022, MIAX PEARL, LLC (''MIAX Pearl'' or the ''Exchange'') filed with the Securities and Exchange Commission (''Commission'') a proposed rule change as described in Items I and II below, which Items have been prepared by the Exchange. The Commission is publishing this notice to solicit comments on the proposed rule change from interested persons.

I. Self-Regulatory Organization's Statement of the Terms of Substance of the Proposed Rule Change

The Exchange proposes to amend Exchange Rule 2613(a), Usage of Data Feeds, to disclose that the Exchange will utilize direct data feeds from MEMX LLC (''MEMX'') when performing order handling, order execution, routing, and related compliance processes for equity securities.

The text of the proposed rule change is available on the Exchange's website at *http://www.miaxoptions.com/rule-filings/pearl* at MIAX PEARL's principal office, and at the Commission's Public Reference Room.

II. Self-Regulatory Organization's Statement of the Purpose of, and Statutory Basis for, the Proposed Rule Change

In its filing with the Commission, the Exchange included statements concerning the purpose of and basis for the proposed rule change and discussed any comments it received on the proposed rule change. The text of these statements may be examined at the places specified in Item IV below. The Exchange has prepared summaries, set forth in sections A, B, and C below, of the most significant aspects of such statements.

A. Self-Regulatory Organization's Statement of the Purpose of, and Statutory Basis for, the Proposed Rule Change

1. Purpose

Exchange Rule 2613 identifies the data feeds that the Exchange utilizes for the handling, execution, and routing of orders in equity securities on the Exchange's equity trading platform (''MIAX Pearl Equities''), as well as for surveillance necessary to monitor compliance with applicable securities laws and Exchange Rules. The Exchange currently utilizes MEMX market data from the Consolidated Quotation System (''CQS'')/UTP Quotation Data Feed (''UQDF'') for these purposes on MIAX Pearl Equities. The Exchange intends to begin to utilize MEMX's direct feeds in place of market data from the CQS/UQDF. Therefore, the Exchange proposes to amend Exchange Rule 2613(a) to reflect that the Exchange will utilize MEMX's direct feeds in place of market data from the CQS/UQDF when performing order handling, order execution, routing, and related compliance processes for equity securities on MIAX Pearl Equities. The Exchange does not currently utilize a secondary source for data from MEMX. Once it begins to utilize direct feeds for data from MEMX, the Exchange will also begin to utilize CQS/UQDF as a secondary source of data from MEMX on MIAX Pearl Equities.

Implementation

Due to the technological changes associated with this proposed change, the Exchange will issue a trading alert publicly announcing the implementation date of this proposed rule change. The Exchange anticipates that the implementation date will be in either the third or fourth quarter of 2022.

2. Statutory Basis

The proposed rule change is consistent with Section 6(b) of the Act,[3] in general, and furthers the objectives of Section 6(b)(5),[4] in particular, because it is designed to prevent fraudulent and manipulative acts and practices, to promote just and equitable principles of trade, to foster cooperation and coordination with persons engaged in regulating, clearing, settling, processing information with respect to, and facilitating transactions in securities, to remove impediments to and perfect the mechanism of a free and open market and a national market system, and, in

[1] 15 U.S.C. 78s(b)(1).

[2] 17 CFR 240.19b–4.

[3] 15 U.S.C. 78f(b).

[4] 15 U.S.C. 78f(b)(5).

general, to protect investors and the public interest.

The proposal to update Exchange Rule 2613(a) to reflect that the Exchange will utilize MEMX's direct feeds in place of market data from the CQS/UQDF on MIAX Pearl Equities will continue to provide market participants with insight and transparency into which data feeds the Exchange utilizes when performing order handling, order execution, routing, and related compliance processes for equity securities. The Exchange's proposal to utilize MEMX's direct feeds promotes just and equitable principles of trade because it will allow the Exchange to receive market data directly from MEMX, thereby potentially enhancing the performance of its order handling, order execution, routing, and related compliance processes for equity securities. The proposed rule changes also remove impediments to and perfects the mechanism of a free and open market and protects investors and the public interest because it will continue to ensure that Exchange Rule 2613(a) accurately reflects the Exchange's sources of market data it utilizes for each other equities exchange and the Financial Industry Regulatory Authority, Inc.'s Alternative Display Facility.

B. Self-Regulatory Organization's Statement on Burden on Competition

The Exchange does not believe that the proposed rule change will impose any burden on competition that is not necessary or appropriate in furtherance of the purposes of the Act. To the contrary, the Exchange believes the proposal would enhance competition by enhancing transparency and enabling market participants to better assess the quality of MIAX Pearl Equities' execution and routing services by continuing to provide market participants with insight and transparency into which data feeds the Exchange utilizes when performing order handling, order execution, routing, and related compliance processes for equity securities. The Exchange also believes the proposal would enhance competition because it will potentially enhance the performance of its order handling and execution of orders in equity securities by receiving market data directly from MEMX. Lastly, the proposed rule change will not impact competition between market participants because it will affect all market participants equally.

C. Self-Regulatory Organization's Statement on Comments on the Proposed Rule Change Received From Members, Participants, or Others

Written comments were neither solicited nor received.

III. Date of Effectiveness of the Proposed Rule Change and Timing for Commission Action

Because the foregoing proposed rule change does not: (i) significantly affect the protection of investors or the public interest; (ii) impose any significant burden on competition; and (iii) become operative for 30 days after the date of the filing, or such shorter time as the Commission may designate, it has become effective pursuant to 19(b)(3)(A) of the Act [5] and Rule 19b–4(f)(6) [6] thereunder.

At any time within 60 days of the filing of the proposed rule change, the Commission summarily may temporarily suspend such rule change if it appears to the Commission that such action is necessary or appropriate in the public interest, for the protection of investors, or otherwise in furtherance of the purposes of the Act. If the Commission takes such action, the Commission shall institute proceedings to determine whether the proposed rule should be approved or disapproved.

IV. Solicitation of Comments

Interested persons are invited to submit written data, views, and arguments concerning the foregoing, including whether the proposed rule change is consistent with the Act. Comments may be submitted by any of the following methods:

Electronic Comments

- Use the Commission's internet comment form (*http://www.sec.gov/rules/sro.shtml*); or
- Send an email to *rule-comments@sec.gov.* Please include File Number SR–PEARL–2022–27 on the subject line.

Paper Comments

- Send paper comments in triplicate to Secretary, Securities and Exchange Commission, 100 F Street NE, Washington, DC 20549–1090.

All submissions should refer to File Number SR–PEARL–2022–27. This file number should be included on the subject line if email is used. To help the Commission process and review your comments more efficiently, please use only one method. The Commission will post all comments on the Commission's internet website (*http://www.sec.gov/rules/sro.shtml*). Copies of the submission, all subsequent amendments, all written statements with respect to the proposed rule change that are filed with the Commission, and all written communications relating to the proposed rule change between the Commission and any person, other than those that may be withheld from the public in accordance with the provisions of 5 U.S.C. 552, will be available for website viewing and printing in the Commission's Public Reference Room, 100 F Street NE, Washington, DC 20549, on official business days between the hours of 10:00 a.m. and 3:00 p.m. Copies of the filing also will be available for inspection and copying at the principal office of the Exchange. All comments received will be posted without change. Persons submitting comments are cautioned that we do not redact or edit personal identifying information from comment submissions. You should submit only information that you wish to make available publicly. All submissions should refer to File Number SR–PEARL–2022–27 and should be submitted on or before August 12, 2022.

For the Commission, by the Division of Trading and Markets, pursuant to delegated authority.[7]

J. Matthew DeLesDernier,

Deputy Secretary.

[FR Doc. 2022–15662 Filed 7–21–22; 8:45 am]

BILLING CODE 8011–01–P

[5] 15 U.S.C. 78s(b)(3)(A).

[6] 17 CFR 240.19b–4(f)(6). In addition, Rule 19b–4(f)(6)(iii) requires a self-regulatory organization to give the Commission written notice of its intent to file the proposed rule change, along with a brief description and text of the proposed rule change, at least five business days prior to the date of filing of the proposed rule change, or such shorter time as designated by the Commission. The Exchange has satisfied this requirement.

[7] 17 CFR 200.30–3(a)(12).

SECURITIES AND EXCHANGE COMMISSION

[Release No. 34–95303; File No. SR–NYSEArca–2022–42]

Self-Regulatory Organizations; NYSE Arca, Inc.; Notice of Filing and Immediate Effectiveness of Proposed Rule Change To Extend the Current Pilot Program Related to Rule 7.10–E (Clearly Erroneous Executions)

July 18, 2022.

Pursuant to Section 19(b)(1) [1] of the Securities Exchange Act of 1934

[1] 15 U.S.C. 78s(b)(1).

(''Act'')[2] and Rule 19b–4 thereunder,[3] notice is hereby given that, on July 13, 2022, NYSE Arca, Inc. (''NYSE Arca'' or the ''Exchange'') filed with the Securities and Exchange Commission (the ''Commission'') the proposed rule change as described in Items I and II below, which Items have been prepared by the self-regulatory organization. The Commission is publishing this notice to solicit comments on the proposed rule change from interested persons.

I. Self-Regulatory Organization's Statement of the Terms of Substance of the Proposed Rule Change

The Exchange proposes to extend the current pilot program related to Rule 7.10–E (Clearly Erroneous Executions) to the close of business on October 20, 2022. The proposed rule change is available on the Exchange's website at *www.nyse.com,* at the principal office of the Exchange, and at the Commission's Public Reference Room.

II. Self-Regulatory Organization's Statement of the Purpose of, and Statutory Basis for, the Proposed Rule Change

In its filing with the Commission, the self-regulatory organization included statements concerning the purpose of, and basis for, the proposed rule change and discussed any comments it received on the proposed rule change. The text of those statements may be examined at the places specified in Item IV below. The Exchange has prepared summaries, set forth in sections A, B, and C below, of the most significant parts of such statements.

A. Self-Regulatory Organization's Statement of the Purpose of, and Statutory Basis for, the Proposed Rule Change

1. Purpose

The purpose of the proposed rule change is to extend the current pilot program related to Rule 7.10–E (Clearly Erroneous Executions) to the close of business on October 20, 2022. The pilot program is currently due to expire on July 20, 2022.

On September 10, 2010, the Commission approved, on a pilot basis, changes to Rule 7.10–E that, among other things: (i) provided for uniform treatment of clearly erroneous execution reviews in multi-stock events involving twenty or more securities; and (ii) reduced the ability of the Exchange to deviate from the objective standards set forth in the rule.[4] In 2013, the Exchange adopted a provision designed to address the operation of the Plan.[5] Finally, in 2014, the Exchange adopted two additional provisions providing that: (i) a series of transactions in a particular security on one or more trading days may be viewed as one event if all such transactions were effected based on the same fundamentally incorrect or grossly misinterpreted issuance information resulting in a severe valuation error for all such transactions; and (ii) in the event of any disruption or malfunction in the operation of the electronic communications and trading facilities of an Exchange, another SRO, or responsible single plan processor in connection with the transmittal or receipt of a trading halt, an Officer, acting on his or her own motion, shall nullify any transaction that occurs after a trading halt has been declared by the primary listing market for a security and before such trading halt has officially ended according to the primary listing market.[6]

These changes were originally scheduled to operate for a pilot period to coincide with the pilot period for the Plan to Address Extraordinary Market Volatility (the ''Limit Up-Limit Down Plan'' or ''LULD Plan''),[7] including any extensions to the pilot period for the LULD Plan.[8] In April 2019, the Commission approved an amendment to the LULD Plan for it to operate on a permanent, rather than pilot, basis.[9] In light of that change, the Exchange amended Rule 7.10–E to untie the pilot program's effectiveness from that of the LULD Plan and to extend the pilot's effectiveness to the close of business on October 18, 2019.[10] The Exchange later amended Rule 7.10–E to extend the pilot's effectiveness to the close of business on April 20, 2020,[11] October 20, 2020,[12] April 20, 2021,[13] October 20, 2021,[14] April 20, 2022,[15] and July 20, 2022.[16]

The Exchange now proposes to amend Rule 7.10–E to extend the pilot's effectiveness for a further three months until the close of business on October 20, 2022 while the Commission considers a proposal to make the pilot program permanent that has been filed by Cboe BZX.[17] If the pilot period is not either extended, replaced or approved as permanent, the prior versions of paragraphs (c), (e)(2), (f), and (g) shall be in effect, and the provisions of paragraphs (i) through (k) shall be null and void.[18] In such an event, the remaining sections of Rule 7.10–E would continue to apply to all transactions executed on the Exchange. The Exchange understands that the other national securities exchanges and Financial Industry Regulatory Authority (''FINRA'') will also file similar proposals to extend their respective clearly erroneous execution pilot programs, the substance of which are identical to Rule 7.10–E.

The Exchange does not propose any additional changes to Rule 7.10–E. Extending the effectiveness of Rule 7.10–E for an additional three months will provide the Exchange and other self-regulatory organizations additional time to consider whether further amendments to the clearly erroneous execution rules are appropriate.

2. Statutory Basis

The Exchange believes the proposed rule change is consistent with the requirements of Section 6(b) of the Act,[19] in general, and Section 6(b)(5) of the Act,[20] in particular, in that it is designed to remove impediments to and perfect the mechanism of a free and open market and a national market system, to promote just and equitable principles of trade, and, in general, to

[2] 15 U.S.C. 78a.

[3] 17 CFR 240.19b–4.

[4] *See* Securities Exchange Act Release No. 62886 (Sept. 10, 2010), 75 FR 56613 (Sept. 16, 2010) (SR–NYSEArca–2010–58).

[5] *See* Securities Exchange Act Release No. 68809 (Feb. 1, 2013), 78 FR 9081 (Feb. 7, 2013) (SR–NYSEArca–2013–12).

[6] *See* Securities Exchange Act Release No. 72434 (June 19, 2014), 79 FR 36110 (June 25, 2014) (SR–NYSEArca–2014–48).

[7] *See* Securities Exchange Act Release No. 67091 (May 31, 2012), 77 FR 33498 (June 6, 2012) (the ''Limit Up-Limit Down Release'').

[8] *See* Securities Exchange Act Release No. 71807 (March 26, 2014), 79 FR 18087 (March 31, 2014) (SR–NYSEArca–2014–32).

[9] *See* Securities Exchange Act Release No. 85623 (April 11, 2019), 84 FR 16086 (April 17, 2019) (approving Eighteenth Amendment to LULD Plan).

[10] *See* Securities Exchange Act Release No. 85532 (April 5, 2019), 84 FR 14708 (April 11, 2019) (SR–NYSEArca–2019–21).

[11] *See* Securities Exchange Act Release No. 87355 (October 18, 2019), 84 FR 57094 (October 24, 2019) (SR–NYSEArca–2019–75).

[12] *See* Securities Exchange Act Release No. 88590 (April 8, 2020), 85 FR 20791 (April 14, 2020) (SR–NYSEArca–2020–25).

[13] *See* Securities Exchange Act Release No. 90155 (October 13, 2020), 85 FR 66386 (October 19, 2020) (SR–NYSEArca–2020–88).

[14] *See* Securities Exchange Act Release No. 91551 (April 14, 2021), 86 FR 20562 (April 20, 2021) (SR–NYSEArca–2021–22).

[15] *See* Securities Exchange Act Release No. 93357 (October 15, 2021), 86 FR 58326 (October 21, 2021) (SR–NYSEArca–2021–87).

[16] *See* Securities Exchange Act Release No. 94640 (April 7, 2022), 87 FR 22002 (April 13, 2022) (SR–NYSEArca–2022–21).

[17] *See* SR–CboeBZX–2022–37 (July 8, 2022).

[18] *See supra* notes 4–6. The prior versions of paragraphs (c), (e)(2), (f), and (g) generally provided greater discretion to the Exchange with respect to breaking erroneous trades.

[19] 15 U.S.C. 78f(b).

[20] 15 U.S.C. 78f(b)(5).

protect investors and the public interest and not to permit unfair discrimination between customers, issuers, brokers, or dealers. The Exchange believes that the proposed rule change promotes just and equitable principles of trade in that it promotes transparency and uniformity across markets concerning review of transactions as clearly erroneous. The Exchange believes that extending the clearly erroneous execution pilot under Rule 7.10–E for an additional three months would help assure that the determination of whether a clearly erroneous trade has occurred will be based on clear and objective criteria, and that the resolution of the incident will occur promptly through a transparent process. The proposed rule change would also help assure consistent results in handling erroneous trades across the U.S. equities markets, thus furthering fair and orderly markets, the protection of investors and the public interest. Based on the foregoing, the Exchange believes the amended clearly erroneous executions rule should continue to be in effect on a pilot basis while the Exchange and other self-regulatory organizations consider whether further amendments to these rules are appropriate.

B. Self-Regulatory Organization's Statement on Burden on Competition

The Exchange does not believe that the proposed rule change would impose any burden on competition that is not necessary or appropriate in furtherance of the purposes of the Act. The proposal would ensure the continued, uninterrupted operation of harmonized clearly erroneous execution rules across the U.S. equities markets while the Exchange and other self-regulatory organizations consider whether further amendments to these rules are appropriate. The Exchange understands that the other national securities exchanges and FINRA will also file similar proposals to extend their respective clearly erroneous execution pilot programs. Thus, the proposed rule change will help to ensure consistency across market centers without implicating any competitive issues.

C. Self-Regulatory Organization's Statement on Comments on the Proposed Rule Change Received From Members, Participants, or Others

No written comments were solicited or received with respect to the proposed rule change.

III. Date of Effectiveness of the Proposed Rule Change and Timing for Commission Action

The Exchange has filed the proposed rule change pursuant to Section 19(b)(3)(A)(iii) of the Act [21] and Rule 19b–4(f)(6) thereunder.[22] Because the foregoing proposed rule change does not: (i) significantly affect the protection of investors or the public interest; (ii) impose any significant burden on competition; and (iii) become operative for 30 days from the date on which it was filed, or such shorter time as the Commission may designate, it has become effective pursuant to Section 19(b)(3)(A)(iii) of the Act [23] and subparagraph (f)(6) of Rule 19b–4 thereunder.[24]

A proposed rule change filed under Rule 19b–4(f)(6) [25] normally does not become operative prior to 30 days after the date of the filing. However, pursuant to Rule 19b–4(f)(6)(iii),[26] the Commission may designate a shorter time if such action is consistent with the protection of investors and the public interest. The Exchange asked that the Commission waive the 30 day operative delay so that the proposal may become operative immediately upon filing. Waiver of the 30-day operative delay would extend the protections provided by the current pilot program, without any changes, while a permanent proposal for clearly erroneous execution reviews is being considered.[27] For this reason, the Commission hereby waives the 30-day operative delay and designates the proposed rule change as operative upon filing.[28]

At any time within 60 days of the filing of the proposed rule change, the Commission summarily may temporarily suspend such rule change if it appears to the Commission that such action is necessary or appropriate in the public interest, for the protection of investors, or otherwise in furtherance of the purposes of the Act. If the Commission takes such action, the Commission shall institute proceedings to determine whether the proposed rule should be approved or disapproved.

IV. Solicitation of Comments

Interested persons are invited to submit written data, views and arguments concerning the foregoing, including whether the proposed rule change is consistent with the Act. Comments may be submitted by any of the following methods:

Electronic Comments

- Use the Commission's internet comment form (*http://www.sec.gov/rules/sro.shtml*); or
- Send an email to *rule-comments@sec.gov.* Please include File Number SR–NYSEArca–2022–42 on the subject line.

Paper Comments

- Send paper comments in triplicate to Secretary, Securities and Exchange Commission, 100 F Street NE, Washington, DC 20549–1090.

All submissions should refer to File Number SR–NYSEArca–2022–42. This file number should be included on the subject line if email is used. To help the Commission process and review your comments more efficiently, please use only one method. The Commission will post all comments on the Commission's internet website (*http://www.sec.gov/rules/sro.shtml*). Copies of the submission, all subsequent amendments, all written statements with respect to the proposed rule change that are filed with the Commission, and all written communications relating to the proposed rule change between the Commission and any person, other than those that may be withheld from the public in accordance with the provisions of 5 U.S.C. 552, will be available for website viewing and printing in the Commission's Public Reference Room, 100 F Street NE, Washington, DC 20549, on official business days between the hours of 10:00 a.m. and 3:00 p.m. Copies of such filing also will be available for inspection and copying at the principal office of the Exchange. All comments received will be posted without change. Persons submitting comments are cautioned that we do not redact or edit personal identifying information from comment submissions. You should submit only information that you wish to make available publicly. All submissions should refer to File Number SR–NYSEArca–2022–42 and should be submitted on or before August 12, 2022.

[21] 15 U.S.C. 78s(b)(3)(A)(iii).

[22] 17 CFR 240.19b–4(f)(6).

[23] 15 U.S.C. 78s(b)(3)(A)(iii).

[24] 17 CFR 240.19b–4(f)(6). In addition, Rule 19b–4(f)(6)(iii) requires a self-regulatory organization to give the Commission written notice of its intent to file the proposed rule change, along with a brief description and text of the proposed rule change, at least five business days prior to the date of filing of the proposed rule change, or such shorter time as designated by the Commission. The Exchange has satisfied this requirement.

[25] 17 CFR 240.19b–4(f)(6).

[26] 17 CFR 240.19b–4(f)(6)(iii).

[27] *See* SR–CboeBZX–2022–37 (July 8, 2022).

[28] For purposes only of waiving the 30-day operative delay, the Commission has also considered the proposed rule's impact on efficiency, competition, and capital formation. *See* 15 U.S.C. 78c(f).

For the Commission, by the Division of Trading and Markets, pursuant to delegated authority.[29]

J. Matthew DeLesDernier,

Deputy Secretary.

[FR Doc. 2022–15660 Filed 7–21–22; 8:45 am]

BILLING CODE 8011–01–P

SECURITIES AND EXCHANGE COMMISSION

[Release No. 34–95312; File No. SR–NYSE–2022–14]

Self-Regulatory Organizations; New York Stock Exchange LLC; Order Instituting Proceedings To Determine Whether To Approve or Disapprove a Proposed Rule Change To Modify Certain Pricing Limitations for Securities Listed on the Exchange Pursuant to a Primary Direct Floor Listing

July 18, 2022.

I. Introduction

On April 7, 2022, New York Stock Exchange LLC (''NYSE'' or ''Exchange'') filed with the Securities and Exchange Commission (''SEC'' or ''Commission''), pursuant to Section 19(b)(1) of the Securities Exchange Act of 1934 (''Exchange Act'')[1] and Rule 19b–4 thereunder,[2] a proposed rule change to modify certain pricing limitations for securities listed on the Exchange pursuant to a direct listing with a primary offering in which the company will sell shares itself in the opening auction on the first day of trading on the Exchange. The proposed rule change was published for comment in the **Federal Register** on April 19, 2022.[3] On May 26, 2022, pursuant to Section 19(b)(2) of the Exchange Act,[4] the Commission designated a longer period within which to either approve the proposed rule change, disapprove the proposed rule change, or institute proceedings to determine whether to disapprove the proposed rule change.[5] The Commission has received one comment on the proposal.[6] This order institutes proceedings under Section 19(b)(2)(B) of the Exchange Act[7] to determine whether to approve or disapprove the proposed rule change.

II. Description of the Proposal

Section 102.01B, Footnote (E) of the of the Listed Company Manual (the ''Manual'') provides that, in certain cases, a company that has not previously had its common equity securities registered under the Exchange Act may wish to list its common equity securities on the Exchange at the time of effectiveness of a registration statement[8] pursuant to which the company will sell shares itself on the first day of trading on the Exchange in addition to, or instead of, facilitating sales by selling shareholders (any such listing in which either (i) only the company itself is selling shares in the opening auction on the first day of trading or (ii) the company is selling shares and selling shareholders may also sell shares in such opening auction, is referred to as a ''Primary Direct Floor Listing'').[9] In the Exchange's prior approved proposal to initially allow for a Primary Direct Floor Listing, the Exchange also adopted Rule 7.31(c)(1)(D) defining an Issuer Direct Offering Order (''IDO Order'')[10] for use by a company that wishes to sell its shares through a Primary Direct Floor Listing. In addition, the Exchange modified Rule 7.35A to describe how the IDO Order would participate in a Direct Listing Auction, establish additional requirements for a Designated Market Maker (''DMM'') when conducting a Direct Listing Auction for a Primary Direct Floor Listing, and specify how the Indication Reference Price would be determined for a security to be opened in a Direct Listing.[11] The Exchange states that currently, under Rule 7.35A(g)(2), the DMM will not conduct a Direct Listing Auction for a Primary Direct Floor Listing if (i) the Auction Price[12] would be outside of the price range specified by the company in its effective registration statement (the ''Price Range Limitation'')[13] and (ii) there is insufficient interest to satisfy both the IDO Order and all better-priced sell orders in full.[14]

The Exchange has proposed to modify the Price Range Limitation to provide that a Direct Listing Auction for a Primary Direct Floor Listing may be conducted if the Auction Price is outside of the price range established by the company in its effective registration statement (the Issuer Price Range) but is either (i) at or above the price that is 20% below the lowest price or at or below the price that is 20% above the highest price of the Issuer Price Range[15] or (ii) above the price that is 20% above the highest price of the Issuer Price Range.[16] The Exchange states that, under its proposal, a Direct Listing Auction for a Primary Direct Floor Listing could proceed in these circumstances provided that the issuer has certified to the Exchange and publicly disclosed that: (i) it does not expect that the Auction Price would materially change the issuer's previous disclosure in its effective registration

[29] 17 CFR 200.30–3(a)(12).

[1] 15 U.S.C. 78s(b)(1).

[2] 17 CFR 240.19b–4.

[3] *See* Securities Exchange Act Release No. 94708 (April 13, 2022), 87 FR 23300 (April 19, 2022) (''Notice'').

[4] 15 U.S.C. 78s(b)(2).

[5] *See* Securities Exchange Act Release No. 94991 (May 26, 2022), 87 FR 33518 (June 2, 2022). The Commission designated July 18, 2022, as the date by which it should approve, disapprove, or institute proceedings to determine whether to disapprove the proposed rule change.

[6] *See* Letter from Andrew Robison, dated April 22, 2022, available at *https://www.sec.gov/comments/sr-nyse-2022-14/srnyse202214-20125830-286149.htm.* The comments expressed by the commenter are not relevant to the proposed rule change.

[7] 15 U.S.C. 78s(b)(2)(B).

[8] The reference to a registration statement refers to a registration statement effective under the Securities Act of 1933 (''Securities Act'').

[9] *See* Section 102.01B, Footnote (E) of the Manual. *See also* Securities Exchange Act Release No. 90768 (December 22, 2020), 85 FR 85807 (December 29, 2020) (SR–NYSE–2019–67) (Order Setting Aside Action by Delegated Authority and Approving a Proposed Rule Change, as Modified by Amendment No. 2, to Amend Chapter One of the Listed Company Manual to Modify the Provisions Relating to Direct Listings) (''Approval Order'').

[10] An IDO Order is a Limit Order to sell that is to be traded only in a Direct Listing Auction. *See* Rule 7.31(c)(1)(D). *See also* Rule 7.31(a)(2) for the definition of ''Limit Order,'' Rule 7.35(a)(1) for the definition of ''Auction,'' and Rule 7.35(a)(1)(E) for the definition of ''Direct Listing Auction.'' The IDO Order has the following requirements: (i) only one IDO Order may be entered on behalf of the issuer and only by one member organization; (ii) the limit price of the IDO Order must be equal to the lowest price of the price range established by the issuer in its effective registration statement; (iii) the IDO Order must be for the quantity of shares offered by the issuer, as disclosed in the prospectus in the effective registration statement; (iv) an IDO Order may not be cancelled or modified; and (v) an IDO Order must be executed in full in the Direct Listing Auction. *See* Rule 7.31(c)(1)(D)(i)–(v).

[11] *See* Notice, *supra* note 3, 87 FR at 23300. *See* Rule 7.35A(d)(2)(A)(v) for a description about how the ''Indication Reference Price'' is determined for a security that is a Primary Direct Floor Listing.

[12] ''Auction Price'' means the price at which an Auction is conducted. *See* Rule 7.35(a)(6).

[13] The Exchange states that references in this rule filing to the price range established by the issuer in its effective registration statement are to the price range disclosed in the prospectus in such registration statement. *See* Notice, *supra* note 3, 87 FR at 23300 n.6. Currently, the Exchange defines the price range established by the issuer in its effective registration statement as the ''Primary Direct Floor Listing Auction Price Range.'' *See* Rule 7.31(c)(1)(D)(ii). As discussed further below, the Exchange proposes to redefine the price range established by the issuer in its effective registration statement as the ''Issuer Price Range.'' *See* proposed Rule 7.31(c)(1)(D)(ii). Throughout this order, we also refer to this ''Issuer Price Range'' as the ''disclosed price range.''

[14] *See* Notice, *supra* note 3, 87 FR at 23300.

[15] As discussed further below, the Exchange proposes to redefine the ''Primary Direct Floor Listing Auction Price Range'' as the price range that includes 20% below the lowest price and 20% above the highest price of the Issuer Price Range. *See* proposed Rule 7.31(c)(1)(D)(ii).

[16] *See* Notice, *supra* note 3, 87 FR at 23300. *See also* proposed Rule 7.35A(g)(2)(B).

statement; (ii) the price range in the preliminary prospectus included in the effective registration statement is a bona fide price range in accordance with Item 501(b)(3) of Regulation S–K; and (iii) such registration statement contains a sensitivity analysis explaining how the issuer's plans would change if the actual proceeds from the offering differ from the amount assumed in the price range established by the issuer in its effective registration statement.[17] The Exchange proposes that, for purposes of determining the Primary Direct Floor Listing Auction Price Range, the 20% threshold will be calculated based on the maximum offering price set forth in the registration fee table, consistent with the Instruction to paragraph (a) of Securities Act Rule 430A.[18]

The Exchange states its belief that, while many companies are interested in alternatives to the traditional initial public offering (''IPO''), companies and their advisors may be reluctant to use the Primary Direct Floor Listing under current Exchange rules because of concerns about the Price Range Limitation.[19] The Exchange states it believes that ''[t]he Price Range Limitation—which is imposed on a Primary Direct Floor Listing but not on an IPO—increases the probability of a failed offering because it contemplates there also being too much investor interest. In other words, if investor interest is greater than the company and its advisors anticipated, an offering would need to be delayed or cancelled.'' [20]

The Exchange states that, under current Exchange Rules, the DMM would not conduct a Direct Listing Auction for a security subject to a Primary Direct Floor Listing if the Auction Price determined is above the highest price of the price range established by the issuer in its effective registration statement.[21] The Exchange further states that, in this case, the offering would be cancelled or postponed until the company amends its effective registration statement, and at a minimum, such a delay could expose the company to risks associated with changing investor sentiment in the event of an adverse market event.[22] The Exchange states its belief that, as a result, companies may be reluctant to use this alternative method of going public despite its expected potential benefits because of the restrictions of the Price Range Limitation.[23]

The Exchange has proposed to modify the Price Range Limitation such that a Direct Listing Auction for a Primary Direct Floor Listing could proceed even if the Auction Price is outside of the Issuer Price Range, provided all other necessary conditions are met, if the Auction Price would not be more than 20% below the lowest price or more than 20% above the highest price of the Issuer Price Range and the company has, in its effective registration statement, specified the quantity of shares registered, as permitted by Securities Act Rule 457.[24] The Exchange also has proposed that a Direct Listing Auction could proceed if the Auction Price is a price that is greater than 20% above the highest price of the Issuer Price Range, provided that all other necessary conditions are satisfied, and the company has, in its effective registration statement, specified the quantity of shares registered, as permitted by Securities Act Rule 457.[25]

The Exchange proposes that when the Auction Price is either (i) outside of the Issuer Price Range but not more than 20% above or below such price range, or (ii) greater than 20% above the highest price of the Issuer Price Range, the Direct Listing Auction would not proceed unless the company has publicly disclosed and certified to the Exchange that (i) the company does not expect that such offering price would materially change the company's previous disclosure in its effective registration statement; (ii) the price range in the preliminary prospectus included in the effective registration statement is a bona fide price range in accordance with Item 501(b)(3) of Regulation S–K; and (iii) the company's registration statement contains a sensitivity analysis explaining how the company's plans would change if the actual proceeds from the offering differ from the amount assumed in the price range established by the issuer in its effective registration statement.[26] In such cases, the Exchange also proposes to provide the issuer with the opportunity to provide any necessary additional disclosures that are dependent on the price of the offering so that any such disclosures would be available to investors prior to the completion of the offering.[27] The Exchange proposes that a Direct Listing Auction for a Primary Direct Floor Listing would not take place until the issuer confirms to the Exchange that no additional disclosures are required under federal securities laws based on the Auction Price determined by the DMM.[28]

The Exchange states its belief that the additional requirements to permit a Direct Listing Auction to take place at an Auction Price that is outside of the Issuer Price Range (whether it is at or within the Primary Direct Floor Listing Auction Price Range or above the highest price of such price range), as proposed, would provide sufficient disclosures to allow investors to evaluate whether to participate in the Direct Listing Auction for a Primary Direct Floor Listing, including the opportunity to see how changes in share price may impact the company's disclosures.[29]

The Exchange states that it believes its proposal with respect to the Price Range Limitation for a Primary Direct Floor Listing is consistent with Securities Act Rule 430A and staff guidance, which, according to the Exchange, generally allow a company to price a public offering 20% outside of the disclosed price range without regard to the materiality of the changes to the disclosure contained in the company's registration statement.[30] According to the Exchange, the Exchange believes that such guidance would also allow for deviation of greater than 20% above the highest price of the price range in a company's registration statement, provided that such change would not materially change the previous disclosure.[31] The Exchange states that, accordingly, the Exchange believes that a company listing in connection with a Primary Direct Floor Listing could specify the quantity of shares registered, as permitted by Securities Act Rule 457, and, if an auction prices outside of the disclosed price range, use a Rule 424(b)

[17] *See* Notice, *supra* note 3, 87 FR at 23300. *See also* proposed Rule 7.35A(g)(2)(B)(i).

[18] *See* proposed Rule 7.31(c)(1)(D)(ii).

[19] *See* Notice, *supra* note 3, 87 FR at 23300.

[20] *Id.* at 23301.

[21] *See id.*

[22] *See* Notice, *supra* note 3, 87 FR at 23300.

[23] *See id.*

[24] *See id.*

[25] *See id.*

[26] *See id.*

[27] *See id.*

[28] *See id. See* proposed Rule 7.35A(g)(2)(B)(ii).

[29] *See* Notice, *supra* note 3, 87 FR at 23300.

[30] *See id.* The Exchange states that Securities Act Rule 457 permits issuers to register securities either by specifying the quantity of shares registered, pursuant to Rule 457(a), or the proposed maximum aggregate offering amount. The Exchange proposes to require that companies selling shares through a Primary Direct Floor Listing will register securities by specifying the quantity of shares registered and not a maximum offering amount. *See id.* at 23301 n.10. The Exchange also states that the Exchange believes that the proposed modification of the Price Range Limitation would promote just and equitable principles of trade, remove impediments to and perfect the mechanism of a free and open market and a national market system, and protect investors and the public interest, because, according to the Exchange, this approach is similar to the pricing of an IPO where an issuer is permitted to price outside of the disclosed price range in accordance with the SEC Staff's guidance. *See id.* at 23304.

[31] *See id.* at 23301–02.

prospectus, rather than a post-effective amendment, when either (i) the 20% threshold noted in Rule 430A is not exceeded, regardless of the materiality or non-materiality of resulting changes to the registration statement disclosure that would be contained in the Rule 424(b) prospectus, or (ii) there is a deviation above the price range beyond the 20% threshold noted in Rule 430A if such deviation would not materially change the previous disclosures, in each case assuming the number of shares issued is not increased from the number of shares disclosed in the prospectus.[32]

The Exchange states that given that, as proposed, there may be a Primary Direct Floor Listing that could price outside of the price range of the company's effective registration statement and that there may be no upper limit above which the Direct Listing Auction could not proceed, the Exchange proposes ''to support price discovery transparency by providing readily available, real time pricing information to investors.'' [33] Specifically, the Exchange represents that the DMM's pre-opening indications for a security to be opened in a Direct Listing Auction for a Primary Direct Floor Listing would continue to be published via the securities information processor (''SIP'') and proprietary data feeds.[34] The Exchange states that it would also make the Indication Reference Price available, free of charge, on a public website (such as *www.nyse.com*) on the day such auction is anticipated to take place.[35] The Exchange also proposes to require member organizations to provide to a customer, before that customer places an order to participate in a Direct Listing Auction for a Primary Direct Floor Listing, a notice describing the mechanics of pricing a security subject to a Direct Listing Auction for a Primary Direct Floor Listing, including information regarding the availability of pre-opening indications via the SIP and proprietary data feeds and the location of the public website where the Exchange would disseminate information relating to the Indication Reference Price.[36]

The Exchange further proposes to distribute, at least one business day prior to the commencement of trading of a security listing in connection with a Primary Direct Floor Listing, a regulatory bulletin that describes any special characteristics of the offering and the Exchange rules that apply to the pricing of a Primary Direct Floor Listing.[37] The Exchange states that the regulatory bulletin would also include information about the notice that member organizations would be required to provide customers, as proposed, and remind member organizations of their obligations pursuant to the Exchange rules that (1) require member organizations to use reasonable diligence in regard to the opening and maintenance of every account, to know (and retain) the essential facts concerning every customer and concerning the authority of each person acting on behalf of such customer (Rule 2090); and (2) require member organizations in recommending transactions for a security subject to a Direct Listing Auction for a Primary Direct Floor Listing to have a reasonable basis to believe that: (i) the recommendation is suitable for a customer given reasonable inquiry concerning the customer's investment objectives, financial situation, needs, and any other information known by such member organizations, and (ii) the customer can evaluate the special characteristics, and is able to bear the financial risks, of an investment in such security (Rule 2111).[38]

The Exchange states that these member organization requirements are intended to remind members of their obligations to ''know their customers'' and would also serve to increase transparency regarding the pricing mechanisms applicable to a Primary Direct Floor Listing and help provide investors with sufficient price discovery information.[39] The Exchange represents that, for each Primary Direct Floor Listing, the Exchange's regulatory bulletin would also inform market participants that the Auction Price could be up to 20% below the lowest price of the disclosed price range and would specify that price.[40] The Exchange also represents that this regulatory bulletin would indicate whether there is a price range outside of which the Direct Listing Auction for the Primary Direct Floor Listing could not proceed, based on the company's certification.[41]

The Exchange also proposes to amend certain aspects of the Manual. Specifically, Section 102.01B, Footnote (E) of the Manual currently provides that, with respect to a Primary Direct Floor Listing, the Exchange will deem a company to have met the applicable aggregate market value of publicly-held shares requirement [42] if the company will sell at least $100,000,000 in market value of shares in the Exchange's opening auction on the first day of trading on the Exchange. The Manual further provides that, where a company is conducting a Primary Direct Floor Listing and will sell shares in the opening auction with a market value of less than $100,000,000, the Exchange will determine that such company has met its market-value of publicly-held shares requirement if the aggregate market value of the shares the company will sell in the opening auction on the first day of trading and the shares that are publicly held immediately prior to the listing is at least $250,000,000 with such market value calculated using a price per share equal to the lowest price of the price range established by the issuer in its registration statement.[43]

The Exchange states that, to effect the changes to the Price Range Limitation and facilitate the possibility of a Direct Listing Auction for a Primary Direct Floor Listing pricing up to 20% below the disclosed price range, the Exchange proposes to modify Section 102.01B, Footnote (E) of the Manual to provide that the Exchange would calculate the market value of such company's shares using a price per share equal to the lowest price of the disclosed price range, minus an amount equal to 20% of the highest price included in such price range, which would be referred to as the ''Primary Direct Floor Listing Minimum Price.'' [44] The Exchange also proposes to amend Section 102.01B, Footnote (E) to include the requirement that a company listing its securities on the Exchange pursuant to a Primary Direct Floor Listing must have specified the quantity of shares registered, as permitted by Securities Act Rule 457, in its effective registration statement.[45]

The Exchange states that, to implement the changes to the Price Range Limitation described above, the

[32] *See id.* at 23302.

[33] *See id.*

[34] *See id. See also* proposed Rule 7.35A(d)(2)(A)(v).

[35] *See* Notice, *supra* note 3, 87 FR at 23302. The Commission observes that the Indication Reference Price for a security that is a Primary Direct Floor Listing is the lowest price of the Primary Direct Floor Listing Auction Price Range, which, as proposed, would be the price that is 20% below the lowest price of the disclosed price range. This price would be known before the opening process begins and would not change once established.

[36] *See id. See also* proposed Rule 7.35A, Commentary .20(3).

[37] *See* Notice, *supra* note 3, 87 FR at 23302. *See also* proposed Rule 7.35A, Commentary .20.

[38] *See* Notice, *supra* note 3, 87 FR at 23302. *See also* proposed Rule 7.35A, Commentary .20(1) and (2).

[39] *See* Notice, *supra* note 3, 87 FR at 23302.

[40] *See id.*

[41] *See id.*

[42] *See* Section 102.01B of the Manual.

[43] *See* Section 102.01B, Footnote (E) of the Manual.

[44] *See* Notice, *supra* note 3, 87 FR at 23302.

[45] *See id.*

Exchange is proposing the following changes to Rules 7.31 and 7.35A.[46]

The Exchange proposes to modify Rule 7.31(c)(1)(D)(ii) to provide that the limit price of an IDO Order would be equal to the lowest price of the Primary Direct Floor Listing Auction Price Range and to redefine the ''Primary Direct Floor Listing Auction Price Range'' as 20% below the lowest price and 20% above the highest price of the price range established by the issuer in its effective registration statement.[47] The Exchange also proposes to define ''Issuer Price Range'' as the price range established by the issuer in its effective registration statement.[48] The Exchange states that Rule 7.31(c)(1)(D)(ii), as modified, would facilitate the proposed changes to the Price Range Limitation by providing that the limit price of an IDO Order would be equal to the price that is 20% below the lowest price of the Issuer Price Range.[49]

Currently, Rule 7.35A(d)(2)(A)(v) provides that, for a security that is a Primary Direct Floor Listing, the Indication Reference Price will be the lowest price of the Primary Direct Floor Listing Auction Price Range.[50] The Exchange proposes to add the requirement that the Exchange disseminate the Indication Reference Price on a public website to Rule 7.35A(d)(2)(A)(v).[51]

Currently, Rule 7.35A(g)(2) specifies the circumstances under which a DMM may not conduct a Direct Listing Auction for a Primary Direct Floor Listing.[52] The Exchange proposes to amend Rule 7.35A(g)(2) such that the rule would specify requirements for a Direct Listing Auction for a Primary Direct Floor Listing to proceed, rather than specifying circumstances under which a DMM would not conduct a Direct Listing Auction for a Primary Direct Floor Listing.[53] The Exchange also proposes to modify Rule 7.35A(g)(2)(A) to specify that the Auction Price for a Direct Listing Auction for a Primary Direct Floor Listing may not be lower than the lowest price of the Primary Direct Floor Listing Auction Price Range.[54] The Exchange states that, based on the proposed revision to the definition of Primary Direct Floor Listing Auction Price Range in Rule 7.31(c)(1)(D)(ii): (i) the Indication Reference Price for a Primary Direct Floor Listing would be the price that is 20% below the lowest price of the Issuer Price Range; and (ii) Rule 7.35A(g)(2)(A) would provide that the Auction Price for a Direct Listing Auction for a Primary Direct Listing would not be more than 20% below the lowest price of the Issuer Price Range.[55]

The Exchange proposes to amend Rule 7.35A(g)(2)(B) to provide that, when the Auction Price is either (i) at or within the Primary Direct Floor Listing Price Range but outside of the Issuer Price Range, or (ii) above the highest price of the Primary Direct Floor Listing Auction Price Range, the Direct Listing Auction could proceed if the issuer has previously certified to the Exchange and publicly disclosed that: (a) the issuer does not expect that the Auction Price would materially change its previous disclosure in its effective registration statement (proposed Rule 7.35A(g)(2)(B)(i)(a)); (b) the price range in the preliminary prospectus included in the effective registration statement is a bona fide price range in accordance with Item 501(b)(3) of Regulation S–K (proposed Rule 7.35A(g)(2)(B)(i)(b)); and (c) the registration statement contains a sensitivity analysis explaining how the issuer's plans would change if the actual proceeds from the offering differ from the amount assumed in the price range established by the issuer in its effective registration statement (proposed Rule 7.35A(g)(2)(B)(i)(c)).[56]

The Exchange states that proposed Rule 7.35A(g)(2)(B)(ii) would further provide that, when the Auction Price determined by the DMM is at or within the Primary Direct Floor Listing Auction Price Range but outside of the Issuer Price Range or is above the highest price of the Primary Direct Floor Listing Auction Price Range, the issuer would be required to confirm to the Exchange that no additional disclosures are required under the federal securities laws based on such price.[57] According to the Exchange, this proposed change would permit issuers to comply with their disclosure obligations under federal securities laws and provide investors with access to the requisite disclosures before the offering would proceed.[58] The Exchange states that, upon receiving confirmation from the issuer that any such obligations have been met, the Exchange would relay that information to the DMM to proceed with the Direct Listing Auction.[59]

The Exchange states that proposed Rule 7.35A(g)(2)(C)(i) would reflect the requirement set forth in current Rule 7.35A(g)(2)(B) that the DMM may not conduct a Direct Listing Auction for a Primary Direct Floor Listing if there is insufficient buy interest to satisfy both the IDO Order and all better-priced sell orders in full.[60] The Exchange does not propose to change this requirement, other than adding clarifying text to specify that such orders would be satisfied at the Auction Price.[61]

The Exchange states that proposed Rule 7.35A(g)(2)(C)(ii) would provide that the DMM would not proceed with a Direct Listing Auction for a Primary Direct Floor Listing until it has been notified by the Exchange that the additional conditions set forth in new Commentary .20 to Rule 7.35A have been satisfied.[62] The Exchange also states that proposed Commentary .20 to Rule 7.35A would provide that the Direct Listing Auction for a Primary Direct Floor Listing for a security may not be conducted until the Exchange has notified the DMM that, at least one business day prior to the commencement of trading in such security, the Exchange has distributed a regulatory bulletin describing: (i) any special characteristics of the offering and the Exchange rules that apply to the pricing of the Primary Direct Floor Listing; (ii) the obligations of member organizations pursuant to Exchange Rules 2090 and 2111; and (iii) the requirement that a member organization provide its customers with a notice with information regarding the Direct Listing Auction for a Primary Direct Floor Listing.[63] The Exchange states that this proposed change would: (i) facilitate the requirements described above to provide member organizations with sufficient information so that they may in turn inform their customers; (ii) remind member organizations of their obligations to ''know their customers''; (iii) increase transparency around the pricing mechanisms of a Primary Direct Floor Listing; and (iv) help provide investors with sufficient price discovery information.[64]

[46] *See id.* at 23303.

[47] *See id.*

[48] *See id.*

[49] *See id.* The Exchange further proposes to specify in Rule 7.31(c)(D)(ii) that, for purposes of determining the Primary Direct Floor Listing Price Range, the 20% threshold would be calculated based on the maximum offering price set forth in the registration fee table, consistent with the Instruction to paragraph (a) of Securities Act Rule 430A. *See id.*

[50] *See id.*

[51] *See id.*

[52] *See id.*

[53] *See id.*

[54] *See id.*

[55] *See id.*

[56] *See id.*

[57] *See id.*

[58] *See id.*

[59] *See id.*

[60] *See id.* at 23303–04.

[61] *See id.* at 23304.

[62] *See id.*

[63] *See id. See also supra* notes 36–38 and accompanying text.

[64] *See* Notice, *supra* note 3, 87 FR at 23304.

Finally, the Exchange states that proposed Rule 7.35A(g)(2)(C)(iii) would provide that the DMM would not conduct a Direct Listing Auction for a Primary Direct Floor Listing if the Auction Price is outside of the Issuer Price Range and the issuer has not satisfied the conditions set forth in proposed Rules 7.35A(g)(2)(B)(i) and (ii).[65] The Exchange states that it proposes this rule to reinforce that a Direct Listing Auction for a Primary Direct Floor Listing could not proceed in these circumstances unless the issuer has made the requisite disclosures described in proposed Rule 7.35A(g)(2)(B).[66]

III. Proceedings To Determine Whether To Approve or Disapprove SR–NYSE–2022–14 and Grounds for Disapproval Under Consideration

The Commission is instituting proceedings pursuant to Section 19(b)(2)(B) of the Exchange Act to determine whether the proposal should be approved or disapproved.[67] Institution of such proceedings is appropriate at this time in view of the legal and policy issues raised by the proposed rule change, as discussed below. Institution of disapproval proceedings does not indicate that the Commission has reached any conclusions with respect to any of the issues involved.

Pursuant to Section 19(b)(2)(B) of the Exchange Act, the Commission is providing notice of the grounds for disapproval under consideration. The Commission is instituting proceedings to allow for additional analysis and input concerning the proposed rule change's consistency with the Exchange Act and, in particular, with Section 6(b)(5)[68] of the Exchange Act, which requires, among other things, that the rules of a national securities exchange be designed to prevent fraudulent and manipulative acts and practices, to promote just and equitable principles of trade, to remove impediments to and perfect the mechanism of a free and open market and a national market system, and, in general, to protect investors and the public interest; and are not designed to permit unfair discrimination between customers, issuers, brokers, or dealers.[69]

The Commission has consistently recognized the importance of national securities exchange listing standards. Among other things, such listing standards help ensure that exchange-listed companies will have sufficient public float, investor base, and trading interest to provide the depth and liquidity necessary to promote fair and orderly markets.[70]

The Exchange is proposing to modify the rules concerning the opening transaction on the first day of trading for a Primary Direct Floor Listing so that the opening transaction is not constrained by the Price Range Limitation, which limits the price of the opening transaction to the price range disclosed in the issuer's effective registration statement. Instead, the proposal would allow the opening transaction to proceed, provided other requirements are satisfied, either (i) at or above the price that is 20% below the lowest price or at or below the price that is 20% above the highest price of the disclosed price range or (ii) above the price that is 20% above the highest price of the disclosed price range.

Specifically, under the proposal, to execute at a price outside of the disclosed price range, the issuer has to certify to the Exchange and publicly disclose that: (i) it does not expect that the Auction Price would materially change the issuer's previous disclosure in its effective registration statement; (ii) the price range in the preliminary prospectus included in the effective registration statement is a bona fide price range in accordance with Item 501(b)(3) of Regulation S–K; and (iii) such registration statement contains a sensitivity analysis explaining how the issuer's plans would change if the actual proceeds from the offering differ from the amount assumed in the disclosed price range.

In support of its proposal, the Exchange states that allowing an auction to be conducted when the Auction Price is not within the disclosed price range would, among other things, protect investors and the public interest because the proposed approach ''is similar to the pricing of an IPO, where the issuer is permitted to price outside of the price range disclosed in its effective registration statement.''[71] NYSE also states that various aspects of its proposal promote investor protection, including, among others, those that require that a company listing shares through a Primary Direct Floor Listing make applicable disclosures under the federal securities laws, support price discovery transparency by providing readily available, real time pricing information to investors, and provide member organizations with the necessary information to share with their customers regarding the Primary Direct Floor Listing.[72] NYSE also states its belief that allowing Direct Listing Auctions in connection with a Primary Direct Floor Listing to price up to 20% below the lowest price and at a price above the highest price of the disclosed price range would be consistent with Chair Gensler's recent call to treat ''like cases alike.''[73]

We have concerns about whether the Exchange has met its burden to demonstrate that its proposal to expand the conditions under which Primary Direct Floor Listings are permitted[74] is consistent with the protection of investors and the public interest, and other relevant provisions under Section 6(b)(5) of the Exchange Act and the rules and regulations thereunder. Under existing NYSE rules that permit Primary Direct Floor Listings, such offerings are required to price within the price range disclosed in the issuer's effective registration statement. When these rules were approved in 2020, the Commission considered that required feature and also stated that the related registration

[65] *See id.*

[66] *See id.*

[67] 15 U.S.C. 78s(b)(2)(B).

[68] 15 U.S.C. 78f(b)(5).

[69] *Id.*

[70] The Commission has stated in approving national securities exchange listing requirements that the development and enforcement of adequate standards governing the listing of securities on an exchange is an activity of critical importance to the financial markets and the investing public. In addition, once a security has been approved for initial listing, maintenance criteria allow an exchange to monitor the status and trading characteristics of that issue to ensure that it continues to meet the exchange's standards for market depth and liquidity so that fair and orderly markets can be maintained. *See, e.g.,* Securities Exchange Act Release No. 91947 (May 19, 2021), 86 FR 28169, 28172 n.47 (May 25, 2021) (SR–NASDAQ–2020–057) (''Nasdaq 2021 Order''); Approval Order, *supra* note 9, 85 FR at 85811 n.55; Securities Exchange Act Release Nos. 82627 (February 2, 2018), 83 FR 5650, 5653 n.53 (February 8, 2018) (SR–NYSE–2017–30) (''NYSE 2018 Order''); 81856 (October 11, 2017), 82 FR 48296, 48298 (October 17, 2017) (SR–NYSE–2017–31); 81079 (July 5, 2017), 82 FR 32022, 32023 (July 11, 2017) (SR–NYSE–2017–11). The Commission has stated that adequate listing standards, by promoting fair and orderly markets, are consistent with Section 6(b)(5) of the Exchange Act, in that they are, among other things, designed to prevent fraudulent and manipulative acts and practices, promote just and equitable principles of trade, and protect investors and the public interest. *See, e.g.,* Nasdaq 2021 Order, 86 FR at 28172 n.47; Approval Order, *supra* note 9, 85 FR at 85811 n.55; NYSE 2018 Order, 83 FR at 5653 n.53; Securities Exchange Act Release Nos. 87648 (December 3, 2019), 84 FR 67308, 67314 n.42 (December 9, 2019) (SR–NASDAQ–2019–059); 88716 (April 21, 2020), 85 FR 23393, 23395 n.22 (April 27, 2020) (SR–NASDAQ–2020–001).

[71] *See* Notice, *supra* note 3, 87 FR at 23304.

[72] *See generally id.* at 23304–05.

[73] *See id.* at 23305.

[74] Under the NYSE rules for a Primary Direct Floor Listing approved by the Commission in December 2020, the DMM would not conduct a Direct Listing Auction for a Primary Direct Floor Listing if the Auction Price would be below the lowest price or above the highest price of the disclosed price range.

statements would include, among other disclosures, a bona fide price range.[75] The Exchange has indicated that it believes that some companies may be reluctant to use the existing rules for a Primary Direct Floor Listing because of concerns about the Price Range Limitation.[76] Permitting Primary Direct Floor Listings to price outside of the disclosed price range could increase the frequency of such offerings and may raise investor protection concerns.

While the Exchange has indicated that the proposal is intended to treat like cases alike with respect to pricing flexibility, it has not addressed certain differences between listings that would occur under this proposed rule change and firm commitment underwritten initial public offerings on the Exchange that may affect investor protection, including the lack of a named underwriter,[77] any challenges to bringing claims under Section 11 of the Securities Act due to the potential assertion of tracing defenses,[78] and how those differences could affect the consistency of the proposal with Section 6(b)(5) of the Exchange Act.[79] It is not clear from the proposal what consideration, if any, the Exchange has given to addressing these issues, or why it believes the proposal is consistent with investor protection, as required by Section 6(b)(5) of the Exchange Act, in light of the pricing flexibility proposed by the Exchange.

In a firm commitment underwritten initial public offering, issuers often adjust the price range disclosed in their registration statements prior to effectiveness in light of pricing feedback received from market analysts and potential investors. These revisions to the disclosed price range may provide valuable information to potential investors as to the issuer's valuation. If, under the proposal, the opening auction can proceed at any price above the disclosed price range, and up to 20% below the low end of the disclosed price range, it is not clear whether issuers pursuing Primary Direct Floor Listings would make similar revisions to the disclosed price range based on investor or market analyst sentiment, and whether the absence of any such corrective price signaling would detrimentally affect investors.

In the absence of a named underwriter in a direct listing where the opening price is executed outside of the disclosed price range, there may not be an adequate assurance that a party who may meet the definition of underwriter will review the information disclosed in the registration statement and take the steps necessary to claim a ''due diligence'' defense. To assert such a defense, a party must establish that, after reasonable investigation, the party had reasonable ground to believe and did believe, at the time the registration statement became effective, that the statements therein were true and that there was no omission to state a material fact required to be stated therein or necessary to make the statements therein not misleading.[80] Underwriters play a critical role in the securities offering process as gatekeepers to the public markets.[81]

The Exchange's proposed expansion of its rules permitting Primary Direct Floor Listings could potentially result in increased regulatory arbitrage, if and to the extent that issuers and intermediaries, including financial advisors, are not subject to equivalent liability standards in the direct listings context as they would be in traditional firm commitment underwritten initial public offerings. Any ability of issuers or intermediaries to minimize potential liability through choosing a direct listing over other methods to become listed on the Exchange could be inconsistent with Section 6(b)(5) of the Exchange Act.

Although financial advisors may, depending on the facts and circumstances, be held liable as statutory underwriters, absent greater clarity as to a financial advisor's status as a statutory underwriter in listings that would occur under this proposed rule change, investors would have no way to know whether financial advisors named as assisting with the direct listing would face Section 11 liability for the disclosure in the registration statement. Investors also may assume that financial advisors would incur equivalent liability, without any assurance that such is the case. Some legal observers have raised concerns that, without clarity on whether financial advisors would be held liable as statutory underwriters, any due diligence may not be as robust as that

[75] *See* Approval Order, *supra* note 9, 85 FR at 85813, 85815.

[76] *See* Notice, *supra* note 3, 87 FR at 23300.

[77] Section 2(a)(11) of the Securities Act defines ''underwriter'' to mean ''any person who has purchased from an issuer with a view to, or offers or sells for an issuer in connection with, the distribution of any security, or participates, or has a direct or indirect participation in the direct or indirect underwriting of any such undertaking.'' Given this broad definition of ''underwriter,'' a financial advisor to an issuer engaged in a Primary Direct Floor Listing may, depending on the facts and circumstances including the nature and extent of the financial advisor's activities, be deemed a statutory ''underwriter'' with respect to the securities offering, with attendant underwriter liabilities. *See* Approval Order, *supra* note 9, 85 FR at 85815. Whether or not any person would be considered a statutory underwriter would be evaluated based on the particular facts and circumstances, in light of the definition of underwriter contained in Section 2(a)(11). In the context of a firm commitment underwritten initial public offering, Item 508 of Regulation S–K requires the underwriters to be named in the registration statement.

[78] Where a Securities Act registration statement, at the time of effectiveness, contains an untrue statement of a material fact or omits to state a material fact required to be stated therein or necessary to make the statements therein not misleading, Section 11(a) of the Securities Act provides a cause of action to ''any person acquiring such security,'' unless it is proved that at the time of the acquisition the person knew of such untruth or omission. Courts have interpreted this statutory provision to permit aftermarket purchasers (*i.e.,* those who acquire their securities in secondary market transactions rather than in the initial distribution from the issuer or underwriter) to recover damages under Section 11, but only if they can ''trace'' the acquired shares back to the offering covered by the false or misleading registration statement. *See, e.g.,* In re Century Aluminum Co. Sec. Litig., 729 F.3d 1104 (9th Cir. 2013). Tracing is not set forth in Section 11 and is a judicially-developed doctrine. The Commission has previously stated that shareholders' ability to pursue claims pursuant to Section 11 of the Securities Act due to traceability issues are not exclusive to nor necessarily inherent in direct listings with a primary capital-raising component, and that this issue is potentially implicated any time securities that are not the subject of a recently effective registration statement trade in the same market as the shares issued pursuant to the registration statement. *See* Approval Order, *supra* note 9, 85 FR at 85815–16. The Ninth Circuit has held that investors who purchase shares in a direct listing may bring claims pursuant to Section 11, even if they cannot prove that the shares they acquired were registered shares. *See* Pirani v. Slack Techs., Inc., 13 F.4th 940 (9th Cir. 2021).

[79] Tracing concerns may be more prevalent in direct listings than traditional underwritten initial public offerings. As compared to traditional firm commitment underwritten initial public offerings in which lock-up arrangements are routinely imposed, direct listings to date typically have not imposed lock-up arrangements. This raises a concern that there may be a heightened risk that investors in direct listings may face difficulties tracing their shares, potentially jeopardizing their ability to pursue Section 11 claims. *See supra* note 78. Given the limited judicial precedent addressing tracing requirements in the context of direct listings, and the typical absence of lock-up arrangements in connection with direct listings to date, we are considering whether the Exchange has met its burden of establishing that the proposal to allow a direct listing to proceed at a price outside of the disclosed price range is consistent with Section 6(b)(5) of the Exchange Act that requires the rules of the Exchange be designed to protect investors and the public interest.

[80] *See* U.S.C. 77k(b)(3).

[81] *See* Securities Act Release No. 7393 (February 20, 1997), 62 FR 9276 (February 28, 1997) (''The due diligence efforts performed by underwriters, accounting professionals and others play a critical role in the integrity of our disclosure system.''); Securities Act Release No. 6335 (August 6, 1981), 46 FR 42015 (August 18, 1981) (''[T]he Securities Act imposes a high standard of conduct on specific persons, including underwriters and directors, associated with a registered public offering of securities. Under Section 11, they must make a reasonable investigation and have reasonable grounds to believe the disclosures in the registration statement are accurate.'').

performed by named underwriters in traditional initial public offerings.[82] Less robust due diligence could result in reduced disclosure quality and lead investors to improperly value the securities offered under the proposed rules. As the proposed rules would permit direct listings to be conducted at prices outside of the disclosed price range, would investors be able to make reasonable pricing decisions without greater clarity as to whether financial advisors would face liability as statutory underwriters? Without increased clarity on this point, would the proposed rule change be inconsistent with investor protection and the public interest?

There are a number of additional questions relating to investor protection and Securities Act liability that merit examination in connection with our consideration of whether the Exchange has met its burden to demonstrate its proposal is consistent with Section 6(b)(5) of the Exchange Act. It is not clear what role a financial advisor would perform, in relation to price range disclosures, in a direct listing where the offering can price outside of the disclosed price range. Would additional transparency into the functions performed by financial advisors in a direct listing where the offering can price outside of the disclosed price range be necessary for investors to determine how much reliance to place on issuer disclosures?

Would any tracing concerns be exacerbated, thus raising investor protection concerns, in the context of direct listings where the offering can price outside of the disclosed price range?[83] What are the implications if the expansion of Primary Direct Floor Listings, as proposed by the Exchange, resulted in fewer investor protections in a direct listing? If under the proposal to modify the Price Range Limitation there is continued uncertainty as to whether a financial advisor would be liable as a statutory underwriter, is the liability of any other gatekeepers in the offering sufficient to protect investors?

The Commission also has concerns about the potential effect of the proposed rules on the usefulness of price range disclosure provided to investors in Securities Act registration statements.[84] Given the possibility under the proposed rules that the offering might price far outside the disclosed price range, would issuers be less likely to update their disclosed price ranges, compared to firm commitment underwritten initial public offerings?[85] Similarly, would disclosed price ranges for direct listings be less reliable as indicators of management's perceived valuation of the issuer? How would the ability to ultimately conduct the auction up to 20% below or anywhere above the disclosed price range affect issuer decisions as to what price range to disclose in the registration statement? Would this impact the usefulness of price range disclosure to potential investors or market analysts? If so, this raises concerns about the consistency of the proposal with investor protection and the public interest under Section 6(b)(5) of the Exchange Act.

Additionally, it is not clear whether the proposed changes would result in the Exchange using the minimum price at which the opening auction could occur as the per share price for purposes of evaluating whether the issuer satisfies the applicable market value of publicly-held shares requirement. The Exchange proposes to amend Section 102.01B, Footnote (E) of the Manual to provide that the Exchange would calculate the market value of publicly-held shares using a price per share equal to the lowest price of the price range established by the issuer in its registration statement ''minus an amount equal to 20% of the highest price included in such price range.''[86] The Exchange also proposes to specify in Rule 7.31(c)(1)(D)(ii) that, for purposes of determining the Primary Direct Floor Listing Auction Price Range, ''the 20% threshold would be calculated based on the maximum offering price set forth in the registration fee table, consistent with the Instruction to paragraph (a) of Securities Act Rule 430A.''[87] Further, the Exchange states its belief that ''the proposed change to Section 102.01B [Footnote] (E) to reflect that the market value calculation of a company's shares would be based on a price per share equal to the lowest price of the price range established by the issuer in its registration statement, less an amount equal to 20% of the highest price included in such price range . . . would update the Manual to align with the proposed changes to the Price Range Limitation.''[88] Is further clarification needed as to the precise manner of computing the 20% threshold under proposed Rule 7.31(c)(1)(D)(ii) and whether that computation would lead to the same minimum price contemplated by the proposed revisions to Section 102.01B, Footnote (E) of the Manual?

Finally, the Exchange proposes to amend Rule 7.35A(d)(2)(A)(v) to provide that the Exchange will disseminate, free of charge, the Indication Reference Price on a public website. As proposed, the Indication Reference Price for a security that is a Primary Direct Floor Listing would be the price that is 20% below the lowest price of the disclosed price range, and as such would be fixed during the course of the auction process. When certain conditions are met, the DMM publishes pre-opening indications that include the price range within which the auction price is anticipated to occur. As proposed, the DMM's pre-opening indications would continue to be published via the SIP and proprietary data feeds, all of which charge subscription fees. Would providing pricing information during the course of the auction process only through pre-opening indications via data feeds that charge subscription fees be consistent with ''providing readily available, real time pricing information to investors''?[89] If not, would the Exchange's proposal provide sufficient

[82] *See* Tuch, Andrew F. and Seligman, Joel, The Further Erosion of Investor Protection: Expanded Exemptions, SPAC Mergers and Direct Listings (December 15, 2021), at 70–71, Washington University in St. Louis Legal Studies Research Paper No. 22–01–03, available at SSRN: *https://ssrn.com/abstract=4020460* (questioning the extent of due diligence performed by financial advisors in direct listings); Horton, Brent J., Spotify's Direct Listing: Is It a Recipe for Gatekeeper Failure?, 72 SMU L.Rev. 177 (2019). In the Approval Order, the Commission stated that ''financial advisors to issuers in Primary Direct Floor Listings have incentives to engage in robust due diligence, given their reputational interests and potential liability, including as statutory underwriters under the broad definition of that term.'' Approval Order, supra note 9, 85 FR at 85815.

[83] *See* notes 78 and 79, *supra,* and accompanying text. The Commission disapproved a prior proposal of Nasdaq to expand the direct listing price range. *See* Securities Exchange Act Release No. 94311 (February 24, 2022). 87 FR 11780 (March 2, 2022) (SR–NASDAQ–2021–045) (''Disapproval Order''). In the Disapproval Order, the Commission stated that Nasdaq did not respond to one commenter's concerns, among others, that investors in direct listings, including direct listings with a capital raise, are likely to continue to have fewer legal rights than investors in a traditional public offering and concerns relating to ''tracing'' share purchases for purposes of Section 11 claims. *See* Disapproval Order, 87 FR at 11785 n.82.

[84] Under the proposed rule change, to execute at a price outside of the disclosed price range, the issuer must certify to NYSE and publicly disclose that: (a) it does not expect that the Auction Price would materially change the issuer's previous disclosure in its effective registration statement; (b) the price range in the preliminary prospectus included in the effective registration statement is a bona fide price range in accordance with Item 501(b)(3) of Regulation S–K; and (c) such registration statement contains a sensitivity analysis explaining how the issuer's plans would change if the actual proceeds from the offering differ from the amount assumed in the disclosed price range.

[85] The Exchange has stated that its proposal to permit more flexibility as to pricing would allow Primary Direct Floor Listings to be treated similarly to other initial public offerings. *See* Notice, *supra* note 3, 87 FR at 23304, 23305.

[86] *See* Notice, *supra* note 3, 87 FR at 23302.

[87] *See id.* at 23303.

[88] *Id.* at 23306.

[89] *Id.* at 23302.

price discovery transparency for investors to be consistent with the protection of investors and the public interest pursuant to Section 6(b)(5) of the Exchange Act?

Under the Commission's Rules of Practice, the ''burden to demonstrate that a proposed rule change is consistent with the Exchange Act and the rules and regulations issued thereunder . . . is on the self-regulatory organization ['SRO'] that proposed the rule change.'' [90] The description of a proposed rule change, its purpose and operation, its effect, and a legal analysis of its consistency with applicable requirements must all be sufficiently detailed and specific to support an affirmative Commission finding,[91] and any failure of an SRO to provide this information may result in the Commission not having a sufficient basis to make an affirmative finding that a proposed rule change is consistent with the Exchange Act and the applicable rules and regulations.[92]

For these reasons, the Commission believes it is appropriate to institute proceedings pursuant to Section 19(b)(2)(B) of the Exchange Act [93] to determine whether the proposal should be approved or disapproved.

IV. Commission's Solicitation of Comments

The Commission requests that interested persons provide written submissions of their views, data, and arguments with respect to the issues identified above, as well as any other concerns they may have with the proposal. In particular, the Commission invites the written view of interested persons concerning whether the proposal is consistent with Section 6(b)(5) or any other provision of the Exchange Act, or the rules and regulations thereunder. Although there do not appear to be any issues relevant to approval or disapproval that would be facilitated by an oral presentation of views, data, and arguments, the Commission will consider, pursuant to Rule 19b–4, any request for an opportunity to make an oral presentation.[94]

Interested persons are invited to submit written data, views, and arguments regarding whether the proposal should be approved or disapproved by August 12, 2022. Any person who wishes to file a rebuttal to any other person's submission must file that rebuttal by August 26, 2022.

Comments may be submitted by any of the following methods:

Electronic Comments

- Use the Commission's internet comment form (*http://www.sec.gov/rules/sro.shtml*); or
- Send an email to *rule-comments@sec.gov.* Please include File Number SR–NYSE–2022–14 on the subject line.

Paper Comments

- Send paper comments in triplicate to Secretary, Securities and Exchange Commission, 100 F Street NE, Washington, DC 20549–1090.

All submissions should refer to File Number SR–NYSE–2022–14. This file number should be included on the subject line if email is used. To help the Commission process and review your comments more efficiently, please use only one method. The Commission will post all comments on the Commission's internet website (*http://www.sec.gov/rules/sro.shtml*). Copies of the submission, all subsequent amendments, all written statements with respect to the proposed rule change that are filed with the Commission, and all written communications relating to the proposed rule change between the Commission and any person, other than those that may be withheld from the public in accordance with the provisions of 5 U.S.C. 552, will be available for website viewing and printing in the Commission's Public Reference Room, 100 F Street NE, Washington, DC 20549, on official business days between the hours of 10:00 a.m. and 3:00 p.m. Copies of such filing also will be available for inspection and copying at the principal office of the Exchange. All comments received will be posted without change. Persons submitting comments are cautioned that we do not redact or edit personal identifying information from comment submissions. You should submit only information that you wish to make available publicly. All submissions should refer to File Number SR–NYSE–2022–14 and should be submitted on or before August 12, 2022. Rebuttal comments should be submitted by August 26, 2022.

For the Commission, by the Division of Trading and Markets, pursuant to delegated authority.[95]

J. Matthew DeLesDernier,

Deputy Secretary.

[FR Doc. 2022–15656 Filed 7–21–22; 8:45 am]

BILLING CODE 8011–01–P

[90] Rule 700(b)(3), Commission Rules of Practice, 17 CFR 201.700(b)(3).

[91] *See id.*

[92] *See id.*

[93] 15 U.S.C. 78s(b)(2)(B).

[94] Section 19(b)(2) of the Exchange Act, as amended by the Securities Act Amendments of 1975, Public Law 94–29 (June 4, 1975), grants the Commission flexibility to determine what type of proceeding—either oral or notice and opportunity for written comments—is appropriate for consideration of a particular proposal by a self-regulatory organization. *See* Securities Act Amendments of 1975, Senate Comm. on Banking, Housing & Urban Affairs, S. Rep. No. 75, 94th Cong., 1st Sess. 30 (1975).

[95] 17 CFR 200.30–3(a)(57).

SECURITIES AND EXCHANGE COMMISSION

[Release No. 34–95301; File No. SR–NYSE–2022–31]

Self-Regulatory Organizations; New York Stock Exchange LLC; Notice of Filing and Immediate Effectiveness of Proposed Rule Change To Extend the Current Pilot Program Related to Rule 7.10 (Clearly Erroneous Executions)

July 18, 2022.

Pursuant to Section 19(b)(1) [1] of the Securities Exchange Act of 1934 (''Act'') [2] and Rule 19b–4 thereunder,[3] notice is hereby given that, on July 13, 2022, New York Stock Exchange LLC (''NYSE'' or the ''Exchange'') filed with the Securities and Exchange Commission (the ''Commission'') the proposed rule change as described in Items I and II below, which Items have been prepared by the self-regulatory organization. The Commission is publishing this notice to solicit comments on the proposed rule change from interested persons.

I. Self-Regulatory Organization's Statement of the Terms of Substance of the Proposed Rule Change

The Exchange proposes to extend the current pilot program related to Rule 7.10 (Clearly Erroneous Executions) to the close of business on October 20, 2022. The proposed rule change is available on the Exchange's website at *www.nyse.com,* at the principal office of the Exchange, and at the Commission's Public Reference Room.

II. Self-Regulatory Organization's Statement of the Purpose of, and Statutory Basis for, the Proposed Rule Change

In its filing with the Commission, the self-regulatory organization included statements concerning the purpose of, and basis for, the proposed rule change and discussed any comments it received on the proposed rule change. The text of those statements may be examined at

[1] 15 U.S.C. 78s(b)(1).

[2] 15 U.S.C. 78a.

[3] 17 CFR 240.19b–4.

the places specified in Item IV below. The Exchange has prepared summaries, set forth in sections A, B, and C below, of the most significant parts of such statements.

A. Self-Regulatory Organization's Statement of the Purpose of, and Statutory Basis for, the Proposed Rule Change

1. Purpose

The purpose of the proposed rule change is to extend the current pilot program related to Rule 7.10 (Clearly Erroneous Executions) to the close of business on October 20, 2022. The pilot program is currently due to expire on July 20, 2022.

On September 10, 2010, the Commission approved, on a pilot basis, changes to Rule 128 (Clearly Erroneous Executions) that, among other things: (i) provided for uniform treatment of clearly erroneous execution reviews in multi-stock events involving twenty or more securities; and (ii) reduced the ability of the Exchange to deviate from the objective standards set forth in the rule.[4] In 2013, the Exchange adopted a provision to Rule 128 designed to address the operation of the Plan.[5] Finally, in 2014, the Exchange adopted two additional provisions to Rule 128 providing that: (i) a series of transactions in a particular security on one or more trading days may be viewed as one event if all such transactions were effected based on the same fundamentally incorrect or grossly misinterpreted issuance information resulting in a severe valuation error for all such transactions; and (ii) in the event of any disruption or malfunction in the operation of the electronic communications and trading facilities of an Exchange, another SRO, or responsible single plan processor in connection with the transmittal or receipt of a trading halt, an Officer, acting on his or her own motion, shall nullify any transaction that occurs after a trading halt has been declared by the primary listing market for a security and before such trading halt has officially ended according to the primary listing market.[6] Rule 128 is no longer applicable to any securities that trade on the Exchange and has been replaced with Rule 7.10, which is substantively identical to Rule 128.[7]

These changes were originally scheduled to operate for a pilot period to coincide with the pilot period for the Plan to Address Extraordinary Market Volatility (the ''Limit Up-Limit Down Plan'' or ''LULD Plan''),[8] including any extensions to the pilot period for the LULD Plan.[9] In April 2019, the Commission approved an amendment to the LULD Plan for it to operate on a permanent, rather than pilot, basis.[10] In light of that change, the Exchange amended Rules 7.10 and 128 to untie the pilot program's effectiveness from that of the LULD Plan and to extend the pilot's effectiveness to the close of business on October 18, 2019.[11] The Exchange later amended Rule 7.10 to extend the pilot's effectiveness to the close of business on April 20, 2020,[12] October 20, 2020,[13] April 20, 2021,[14] October 20, 2021,[15] April 20, 2022,[16] and July 20, 2022.[17]

The Exchange now proposes to amend Rule 7.10 to extend the pilot program's effectiveness for a further three months until the close of business on October 20, 2022 while the Commission considers a proposal to make the pilot program permanent that has been filed by Cboe BZX.[18] If the pilot period is not either extended, replaced or approved as permanent, the prior versions of paragraphs (c), (e)(2), (f), and (g) shall be in effect, and the provisions of paragraphs (i) through (k) shall be null and void.[19] In such an event, the remaining sections of Rules 7.10 would continue to apply to all transactions executed on the Exchange. The Exchange understands that the other national securities exchanges and Financial Industry Regulatory Authority (''FINRA'') will also file similar proposals to extend their respective clearly erroneous execution pilot programs, the substance of which are identical to Rule 7.10.

The Exchange does not propose any additional changes to Rule 7.10. Extending the effectiveness of Rule 7.10 for an additional three months will provide the Exchange and other self-regulatory organizations additional time to consider whether further amendments to the clearly erroneous execution rules are appropriate.

2. Statutory Basis

The Exchange believes the proposed rule change is consistent with the requirements of Section 6(b) of the Act,[20] in general, and Section 6(b)(5) of the Act,[21] in particular, in that it is designed to remove impediments to and perfect the mechanism of a free and open market and a national market system, to promote just and equitable principles of trade, and, in general, to protect investors and the public interest and not to permit unfair discrimination between customers, issuers, brokers, or dealers. The Exchange believes that the proposed rule change promotes just and equitable principles of trade in that it promotes transparency and uniformity across markets concerning review of transactions as clearly erroneous. The Exchange believes that extending the clearly erroneous execution pilot under Rule 7.10 for an additional three months would help assure that the determination of whether a clearly erroneous trade has occurred will be based on clear and objective criteria, and that the resolution of the incident will occur promptly through a transparent process. The proposed rule change would also help assure consistent results in handling erroneous trades across the U.S. equities markets, thus furthering fair and orderly markets, the protection of investors and the public interest. Based on the foregoing, the Exchange believes the amended clearly erroneous executions rule should continue to be in effect on a pilot basis while the Exchange and other self-

[4] *See* Securities Exchange Act Release No. 62886 (Sept. 10, 2010), 75 FR 56613 (Sept. 16, 2010) (SR–NYSE–2010–47).

[5] *See* Securities Exchange Act Release No. 68804 (Feb. 1, 2013), 78 FR 8677 (Feb. 6, 2013) (SR–NYSE–2013–11).

[6] *See* Securities Exchange Act Release No. 72434 (June 19, 2014), 79 FR 36110 (June 25, 2014) (SR–NYSE–2014–22).

[7] *See* Securities Exchange Act Release Nos. 82945 (March 26, 2019), 83 FR 13553, 13565 (March 29, 2019) (SR–NYSE–2017–36) (Approval Order) and 85962 (May 29, 2019), 84 FR 26188, 26189 n.13 (June 5, 2019) (SR–NYSE–2019–05) (Approval Order).

[8] *See* Securities Exchange Act Release No. 67091 (May 31, 2012), 77 FR 33498 (June 6, 2012) (the ''Limit Up-Limit Down Release'').

[9] *See* Securities Exchange Act Release No. 71821 (March 27, 2014), 79 FR 18592 (April 2, 2014) (SR–NYSE–2014–17).

[10] *See* Securities Exchange Act Release No. 85623 (April 11, 2019), 84 FR 16086 (April 17, 2019) (approving Eighteenth Amendment to LULD Plan).

[11] *See* Securities Exchange Act Release No. 85523 (April 5, 2019), 84 FR 14706 (April 11, 2019) (SR–NYSE–2019–17).

[12] *See* Securities Exchange Act Release No. 87353 (October 18, 2019), 84 FR 57087 (October 24, 2019) (SR–NYSE–2019–56).

[13] *See* Securities Exchange Act Release No. 88580 (April 7, 2020), 85 FR 20551 (April 13, 2020) (SR–NYSE–2020–24).

[14] *See* Securities Exchange Act Release No. 90151 (October 9, 2020), 85 FR 65458 (October 15, 2020) (SR–NYSE–2020–83).

[15] *See* Securities Exchange Act Release No. 91553 (April 14, 2021), 86 FR 20552 (April 20, 2021) (SR–NYSE–2021–24).

[16] *See* Securities Exchange Act Release No. 93354 (October 15, 2021), 86 FR 58354 (October 21, 2021) (SR–NYSE–2021–59).

[17] *See* Securities Exchange Act Release No. 94642 (April 7, 2021), 87 FR 21984 (April 13, 2022) (SR–NYSE–2022–19).

[18] *See* SR-CboeBZX–2022–37 (July 8, 2022).

[19] *See supra* notes 4–6. The prior versions of paragraphs (c), (e)(2), (f), and (g) generally provided greater discretion to the Exchange with respect to breaking erroneous trades.

[20] 15 U.S.C. 78f(b).

[21] 15 U.S.C. 78f(b)(5).

regulatory organizations consider whether further amendments to these rules are appropriate.

B. Self-Regulatory Organization's Statement on Burden on Competition

The Exchange does not believe that the proposed rule change would impose any burden on competition that is not necessary or appropriate in furtherance of the purposes of the Act. The proposal would ensure the continued, uninterrupted operation of harmonized clearly erroneous execution rules across the U.S. equities markets while the Exchange and other self-regulatory organizations consider whether further amendments to these rules are appropriate. The Exchange understands that the other national securities exchanges and FINRA will also file similar proposals to extend their respective clearly erroneous execution pilot programs. Thus, the proposed rule change will help to ensure consistency across market centers without implicating any competitive issues.

C. Self-Regulatory Organization's Statement on Comments on the Proposed Rule Change Received From Members, Participants, or Others

No written comments were solicited or received with respect to the proposed rule change.

III. Date of Effectiveness of the Proposed Rule Change and Timing for Commission Action

The Exchange has filed the proposed rule change pursuant to Section 19(b)(3)(A)(iii) of the Act [22] and Rule 19b–4(f)(6) thereunder.[23] Because the foregoing proposed rule change does not: (i) significantly affect the protection of investors or the public interest; (ii) impose any significant burden on competition; and (iii) become operative for 30 days from the date on which it was filed, or such shorter time as the Commission may designate, it has become effective pursuant to Section 19(b)(3)(A)(iii) of the Act [24] and subparagraph (f)(6) of Rule 19b–4 thereunder.[25]

A proposed rule change filed under Rule 19b–4(f)(6) [26] normally does not become operative prior to 30 days after the date of the filing. However, pursuant to Rule 19b–4(f)(6)(iii),[27] the Commission may designate a shorter time if such action is consistent with the protection of investors and the public interest. The Exchange asked that the Commission waive the 30 day operative delay so that the proposal may become operative immediately upon filing. Waiver of the 30-day operative delay would extend the protections provided by the current pilot program, without any changes, while a permanent proposal for clearly erroneous execution reviews is being considered.[28] For this reason, the Commission hereby waives the 30-day operative delay and designates the proposed rule change as operative upon filing.[29]

At any time within 60 days of the filing of the proposed rule change, the Commission summarily may temporarily suspend such rule change if it appears to the Commission that such action is necessary or appropriate in the public interest, for the protection of investors, or otherwise in furtherance of the purposes of the Act. If the Commission takes such action, the Commission shall institute proceedings to determine whether the proposed rule should be approved or disapproved.

IV. Solicitation of Comments

Interested persons are invited to submit written data, views and arguments concerning the foregoing, including whether the proposed rule change is consistent with the Act. Comments may be submitted by any of the following methods:

Electronic Comments

- Use the Commission's internet comment form (*http://www.sec.gov/rules/sro.shtml*); or
- Send an email to *rule-comments@sec.gov.* Please include File Number SR–NYSE–2022–31 on the subject line.

Paper Comments

- Send paper comments in triplicate to Secretary, Securities and Exchange Commission, 100 F Street NE, Washington, DC 20549–1090.

All submissions should refer to File Number SR–NYSE–2022–31. This file number should be included on the subject line if email is used. To help the Commission process and review your comments more efficiently, please use only one method. The Commission will post all comments on the Commission's internet website (*http://www.sec.gov/rules/sro.shtml*). Copies of the submission, all subsequent amendments, all written statements with respect to the proposed rule change that are filed with the Commission, and all written communications relating to the proposed rule change between the Commission and any person, other than those that may be withheld from the public in accordance with the provisions of 5 U.S.C. 552, will be available for website viewing and printing in the Commission's Public Reference Room, 100 F Street NE, Washington, DC 20549, on official business days between the hours of 10:00 a.m. and 3:00 p.m. Copies of such filing also will be available for inspection and copying at the principal office of the Exchange. All comments received will be posted without change. Persons submitting comments are cautioned that we do not redact or edit personal identifying information from comment submissions. You should submit only information that you wish to make available publicly. All submissions should refer to File Number SR–NYSE–2022–31 and should be submitted on or before August 12, 2022.

For the Commission, by the Division of Trading and Markets, pursuant to delegated authority.[30]

J. Matthew DeLesDernier,

Deputy Secretary.

[FR Doc. 2022–15657 Filed 7–21–22; 8:45 am]

BILLING CODE 8011–01–P

[22] 15 U.S.C. 78s(b)(3)(A)(iii).

[23] 17 CFR 240.19b–4(f)(6).

[24] 15 U.S.C. 78s(b)(3)(A)(iii).

[25] 17 CFR 240.19b–4(f)(6). In addition, Rule 19b–4(f)(6)(iii) requires a self-regulatory organization to give the Commission written notice of its intent to file the proposed rule change, along with a brief description and text of the proposed rule change, at least five business days prior to the date of filing of the proposed rule change, or such shorter time as designated by the Commission. The Exchange has satisfied this requirement.

[26] 17 CFR 240.19b–4(f)(6).

[27] 17 CFR 240.19b–4(f)(6)(iii).

[28] *See* SR–CboeBZX–2022–37 (July 8, 2022).

[29] For purposes only of waiving the 30-day operative delay, the Commission has also considered the proposed rule's impact on efficiency, competition, and capital formation. *See* 15 U.S.C. 78c(f).

[30] 17 CFR 200.30–3(a)(12).

SECURITIES AND EXCHANGE COMMISSION

Sunshine Act Meetings

TIME AND DATE: 4:00 p.m. on Wednesday, July 27, 2022.

PLACE: The meeting will be held via remote means and/or at the Commission's headquarters, 100 F Street NE, Washington, DC 20549.

STATUS: This meeting will be closed to the public.

MATTERS TO BE CONSIDERED: Commissioners, Counsel to the Commissioners, the Secretary to the Commission, and recording secretaries will attend the closed meeting. Certain staff members who have an interest in the matters also may be present.

In the event that the time, date, or location of this meeting changes, an

announcement of the change, along with the new time, date, and/or place of the meeting will be posted on the Commission's website at *https://www.sec.gov.*

The General Counsel of the Commission, or his designee, has certified that, in his opinion, one or more of the exemptions set forth in 5 U.S.C. 552b(c)(3), (5), (6), (7), (8), 9(B) and (10) and 17 CFR 200.402(a)(3), (a)(5), (a)(6), (a)(7), (a)(8), (a)(9)(ii) and (a)(10), permit consideration of the scheduled matters at the closed meeting.

The subject matter of the closed meeting will consist of the following topics:

Institution and settlement of injunctive actions;

Institution and settlement of administrative proceedings;

Resolution of litigation claims; and

Other matters relating to examinations and enforcement proceedings.

At times, changes in Commission priorities require alterations in the scheduling of meeting agenda items that may consist of adjudicatory, examination, litigation, or regulatory matters.

CONTACT PERSON FOR MORE INFORMATION: For further information; please contact Vanessa A. Countryman from the Office of the Secretary at (202) 551–5400.

Authority: 5 U.S.C. 552b.

Dated: July 20, 2022.

Vanessa A. Countryman,

Secretary.

[FR Doc. 2022–15855 Filed 7–20–22; 4:15 pm]

BILLING CODE 8011–01–P

SECURITIES AND EXCHANGE COMMISSION

[Release No. 34–95306; File No. SR–NYSENAT–2022–13]

Self-Regulatory Organizations; NYSE National, Inc.; Notice of Filing and Immediate Effectiveness of Proposed Rule Change To Extend the Current Pilot Program Related to Rule 7.10 (Clearly Erroneous Executions)

July 18, 2022.

Pursuant to Section 19(b)(1) [1] of the Securities Exchange Act of 1934 (''Act'') [2] and Rule 19b–4 thereunder,[3] notice is hereby given that, on July 13, 2022, NYSE National, Inc. (''NYSE National'' or the ''Exchange'') filed with the Securities and Exchange Commission (the ''Commission'') the proposed rule change as described in Items I and II below, which Items have been prepared by the self-regulatory organization. The Commission is publishing this notice to solicit comments on the proposed rule change from interested persons.

I. Self-Regulatory Organization's Statement of the Terms of Substance of the Proposed Rule Change

The Exchange proposes to extend the current pilot program related to Rule 7.10 (Clearly Erroneous Executions) to the close of business on October 20, 2022. The proposed rule change is available on the Exchange's website at *www.nyse.com,* at the principal office of the Exchange, and at the Commission's Public Reference Room.

II. Self-Regulatory Organization's Statement of the Purpose of, and Statutory Basis for, the Proposed Rule Change

In its filing with the Commission, the self-regulatory organization included statements concerning the purpose of, and basis for, the proposed rule change and discussed any comments it received on the proposed rule change. The text of those statements may be examined at the places specified in Item IV below. The Exchange has prepared summaries, set forth in sections A, B, and C below, of the most significant parts of such statements.

A. Self-Regulatory Organization's Statement of the Purpose of, and Statutory Basis for, the Proposed Rule Change

1. Purpose

The purpose of the proposed rule change is to extend the current pilot program related to Rule 7.10 (Clearly Erroneous Executions) to the close of business on October 20, 2022. The pilot program is currently due to expire on July 20, 2022.

On September 10, 2010, the Commission approved, on a pilot basis, changes to Rule 11.19 (Clearly Erroneous Executions) that, among other things: (i) provided for uniform treatment of clearly erroneous execution reviews in multi-stock events involving twenty or more securities; and (ii) reduced the ability of the Exchange to deviate from the objective standards set forth in the rule.[4] In 2013, the Exchange adopted a provision designed to address the operation of the Plan.[5] Finally, in 2014, the Exchange adopted two additional provisions providing that: (i) a series of transactions in a particular security on one or more trading days may be viewed as one event if all such transactions were effected based on the same fundamentally incorrect or grossly misinterpreted issuance information resulting in a severe valuation error for all such transactions; and (ii) in the event of any disruption or malfunction in the operation of the electronic communications and trading facilities of an Exchange, another SRO, or responsible single plan processor in connection with the transmittal or receipt of a trading halt, an Officer, acting on his or her own motion, shall nullify any transaction that occurs after a trading halt has been declared by the primary listing market for a security and before such trading halt has officially ended according to the primary listing market.[6] Rule 11.19 is no longer applicable to any securities that trade on the Exchange and has been replaced with Rule 7.10, which is substantively identical to Rule 11.19.[7]

These changes were originally scheduled to operate for a pilot period to coincide with the pilot period for the Plan to Address Extraordinary Market Volatility (the ''Limit Up-Limit Down Plan'' or ''LULD Plan''),[8] including any extensions to the pilot period for the LULD Plan.[9] In April 2019, the Commission approved an amendment to the LULD Plan for it to operate on a permanent, rather than pilot, basis.[10] In light of that change, the Exchange amended Rule 7.10 to untie the pilot program's effectiveness from that of the LULD Plan and to extend the pilot's effectiveness to the close of business on October 18, 2019.[11]

[1] 15 U.S.C. 78s(b)(1).

[2] 15 U.S.C. 78a.

[3] 17 CFR 240.19b–4.

[4] *See* Securities Exchange Act Release No. 62886 (Sept. 10, 2010), 75 FR 56613 (Sept. 16, 2010) (SR–NSX–2010–07).

[5] *See* Securities Exchange Act Release No. 68803 (Feb. 1, 2013), 78 FR 9078 (Feb. 7, 2013) (SR–NSX–2013–06).

[6] *See* Securities Exchange Act Release No. 72434 (June 19, 2014), 79 FR 36110 (June 25, 2014) (SR–NSX–2014–08).

[7] *See* Securities Exchange Act Release No. 83289 (May 17, 2018), 83 FR 23968 (May 23, 2018) (SR–NYSENAT–2018–02).

[8] *See* Securities Exchange Act Release No. 67091 (May 31, 2012), 77 FR 33498 (June 6, 2012) (the ''Limit Up-Limit Down Release'').

[9] *See* Securities Exchange Act Release No. 71797 (March 25, 2014), 79 FR 18108 (March 31, 2014) (SR–NSX–2014–07).

[10] *See* Securities Exchange Act Release No. 85623 (April 11, 2019), 84 FR 16086 (April 17, 2019) (approving Eighteenth Amendment to LULD Plan).

[11] *See* Securities Exchange Act Release No. 85522 (April 5, 2019), 84 FR 14704 (April 11, 2019) (SR–NYSENAT–2019–07).

The Exchange later amended Rule 7.10 to extend the pilot's effectiveness to the close of business on April 20, 2020,[12] October 20, 2020,[13] April 20, 2021,[14] October 20, 2021,[15] April 20, 2022,[16] and July 20, 2022.[17]

The Exchange now proposes to amend Rule 7.10 to extend the pilot's effectiveness for a further three months to the close of business on October 20, 2022 while the Commission considers a proposal to make the pilot program permanent that has been filed by Cboe BZX.[18] If the pilot period is not either extended, replaced or approved as permanent, the prior versions of paragraphs (c), (e)(2), (f), and (g) as described in former Rule 11.19 will be in effect, and the provisions of paragraphs (i) through (k) shall be null and void.[19] In such an event, the remaining sections of Rule 7.10 would continue to apply to all transactions executed on the Exchange. The Exchange understands that the other national securities exchanges and Financial Industry Regulatory Authority (''FINRA'') will also file similar proposals to extend their respective clearly erroneous execution pilot programs, the substance of which are identical to Rule 7.10.

The Exchange does not propose any additional changes to Rule 7.10. Extending the effectiveness of Rule 7.10 for an additional three months will provide the Exchange and other self-regulatory organizations additional time to consider whether further amendments to the clearly erroneous execution rules are appropriate.

2. Statutory Basis

The Exchange believes the proposed rule change is consistent with the requirements of Section 6(b) of the Act,[20] in general, and Section 6(b)(5) of the Act,[21] in particular, in that it is designed to remove impediments to and perfect the mechanism of a free and open market and a national market system, to promote just and equitable principles of trade, and, in general, to protect investors and the public interest and not to permit unfair discrimination between customers, issuers, brokers, or dealers. The Exchange believes that the proposed rule change promotes just and equitable principles of trade in that it promotes transparency and uniformity across markets concerning review of transactions as clearly erroneous. The Exchange believes that extending the clearly erroneous execution pilot under Rule 7.10 for an additional three months would help assure that the determination of whether a clearly erroneous trade has occurred will be based on clear and objective criteria, and that the resolution of the incident will occur promptly through a transparent process. The proposed rule change would also help assure consistent results in handling erroneous trades across the U.S. equities markets, thus furthering fair and orderly markets, the protection of investors and the public interest. Based on the foregoing, the Exchange believes the amended clearly erroneous executions rule should continue to be in effect on a pilot basis while the Exchange and other self-regulatory organizations consider whether further amendments to these rules are appropriate.

B. Self-Regulatory Organization's Statement on Burden on Competition

The Exchange does not believe that the proposed rule change would impose any burden on competition that is not necessary or appropriate in furtherance of the purposes of the Act. The proposal would ensure the continued, uninterrupted operation of harmonized clearly erroneous execution rules across the U.S. equities markets while the Exchange and other self-regulatory organizations consider whether further amendments to these rules are appropriate. The Exchange understands that the other national securities exchanges and FINRA will also file similar proposals to extend their respective clearly erroneous execution pilot programs. Thus, the proposed rule change will help to ensure consistency across market centers without implicating any competitive issues.

C. Self-Regulatory Organization's Statement on Comments on the Proposed Rule Change Received From Members, Participants, or Others

No written comments were solicited or received with respect to the proposed rule change.

III. Date of Effectiveness of the Proposed Rule Change and Timing for Commission Action

The Exchange has filed the proposed rule change pursuant to Section 19(b)(3)(A)(iii) of the Act[22] and Rule 19b–4(f)(6) thereunder.[23] Because the foregoing proposed rule change does not: (i) significantly affect the protection of investors or the public interest; (ii) impose any significant burden on competition; and (iii) become operative for 30 days from the date on which it was filed, or such shorter time as the Commission may designate, it has become effective pursuant to Section 19(b)(3)(A)(iii) of the Act[24] and subparagraph (f)(6) of Rule 19b–4 thereunder.[25]

A proposed rule change filed under Rule 19b–4(f)(6)[26] normally does not become operative prior to 30 days after the date of the filing. However, pursuant to Rule 19b–4(f)(6)(iii),[27] the Commission may designate a shorter time if such action is consistent with the protection of investors and the public interest. The Exchange asked that the Commission waive the 30 day operative delay so that the proposal may become operative immediately upon filing. Waiver of the 30-day operative delay would extend the protections provided by the current pilot program, without any changes, while a permanent proposal for clearly erroneous execution reviews is being considered.[28] For this reason, the Commission hereby waives the 30-day operative delay and designates the proposed rule change as operative upon filing.[29]

At any time within 60 days of the filing of the proposed rule change, the

[12] *See* Securities Exchange Act Release No. 87352 (October 18, 2019), 84 FR 57063 (October 24, 2019) (SR–NYSENAT–2019–24).

[13] *See* Securities Exchange Act Release No. 88593 (April 8, 2020), 85 FR 20728 (April 14, 2020) (SR–NYSENAT–2020–13).

[14] *See* Securities Exchange Act Release No. 90157 (October 13, 2020), 85 FR 66393 (October 19, 2020) (SR–NYSENAT–2020–32).

[15] *See* Securities Exchange Act Release No. 91549 (April 14, 2021), 86 FR 20548 (April 20, 2021) (SR–NYSENAT–2021–08).

[16] *See* Securities Exchange Act Release No. 93359 (October 15, 2021), 86 FR 58322 (October 21, 2021) (SR–NYSENAT–2021–20).

[17] *See* Securities Exchange Act Release No. 94638 (April 7, 2022), 87 FR 21938 (April 13, 2022) (SR–NYSENAT–2022–05).

[18] *See* SR–CboeBZX–2022–37 (July 8, 2022).

[19] *See supra* notes 4–6. The prior versions of paragraphs (c), (e)(2), (f), and (g) generally provided greater discretion to the Exchange with respect to breaking erroneous trades.

[20] 15 U.S.C. 78f(b).

[21] 15 U.S.C. 78f(b)(5).

[22] 15 U.S.C. 78s(b)(3)(A)(iii).

[23] 17 CFR 240.19b–4(f)(6).

[24] 15 U.S.C. 78s(b)(3)(A)(iii).

[25] 17 CFR 240.19b–4(f)(6). In addition, Rule 19b–4(f)(6)(iii) requires a self-regulatory organization to give the Commission written notice of its intent to file the proposed rule change, along with a brief description and text of the proposed rule change, at least five business days prior to the date of filing of the proposed rule change, or such shorter time as designated by the Commission. The Exchange has satisfied this requirement.

[26] 17 CFR 240.19b–4(f)(6).

[27] 17 CFR 240.19b–4(f)(6)(iii).

[28] *See* SR–CboeBZX–2022–37 (July 8, 2022).

[29] For purposes only of waiving the 30-day operative delay, the Commission has also considered the proposed rule's impact on efficiency, competition, and capital formation. *See* 15 U.S.C. 78c(f).

Commission summarily may temporarily suspend such rule change if it appears to the Commission that such action is necessary or appropriate in the public interest, for the protection of investors, or otherwise in furtherance of the purposes of the Act. If the Commission takes such action, the Commission shall institute proceedings to determine whether the proposed rule should be approved or disapproved.

IV. Solicitation of Comments

Interested persons are invited to submit written data, views and arguments concerning the foregoing, including whether the proposed rule change is consistent with the Act. Comments may be submitted by any of the following methods:

Electronic Comments

- Use the Commission's internet comment form (*http://www.sec.gov/rules/sro.shtml*); or
- Send an email to *rule-comments@sec.gov.* Please include File Number SR–NYSENAT–2022–13 on the subject line.

Paper Comments

- Send paper comments in triplicate to Secretary, Securities and Exchange Commission, 100 F Street NE, Washington, DC 20549–1090.

All submissions should refer to File Number SR–NYSENAT–2022–13. This file number should be included on the subject line if email is used. To help the Commission process and review your comments more efficiently, please use only one method. The Commission will post all comments on the Commission's internet website (*http://www.sec.gov/rules/sro.shtml*). Copies of the submission, all subsequent amendments, all written statements with respect to the proposed rule change that are filed with the Commission, and all written communications relating to the proposed rule change between the Commission and any person, other than those that may be withheld from the public in accordance with the provisions of 5 U.S.C. 552, will be available for website viewing and printing in the Commission's Public Reference Room, 100 F Street NE, Washington, DC 20549, on official business days between the hours of 10:00 a.m. and 3:00 p.m. Copies of such filing also will be available for inspection and copying at the principal office of the Exchange. All comments received will be posted without change. Persons submitting comments are cautioned that we do not redact or edit personal identifying information from comment submissions. You should submit only information that you wish to make available publicly. All submissions should refer to File Number SR–NYSENAT–2022–13 and should be submitted on or before August 12, 2022.

For the Commission, by the Division of Trading and Markets, pursuant to delegated authority.[30]

J. Matthew DeLesDernier,

Deputy Secretary.

[FR Doc. 2022–15661 Filed 7–21–22; 8:45 am]

BILLING CODE 8011–01–P

SECURITIES AND EXCHANGE COMMISSION

[Release No. 34–95302; File No. SR–NYSEAMER–2022–32]

Self-Regulatory Organizations; NYSE American LLC; Notice of Filing and Immediate Effectiveness of Proposed Rule Change To Extend the Current Pilot Program Related to Rule 7.10E (Clearly Erroneous Executions)

July 18, 2022.

Pursuant to Section 19(b)(1) [1] of the Securities Exchange Act of 1934 (''Act'') [2] and Rule 19b–4 thereunder,[3] notice is hereby given that, on July 13, 2022, NYSE American LLC (''NYSE American'' or the ''Exchange'') filed with the Securities and Exchange Commission (the ''Commission'') the proposed rule change as described in Items I and II below, which Items have been prepared by the self-regulatory organization. The Commission is publishing this notice to solicit comments on the proposed rule change from interested persons.

I. Self-Regulatory Organization's Statement of the Terms of Substance of the Proposed Rule Change

The Exchange proposes to extend the current pilot program related to Rule 7.10E (Clearly Erroneous Executions) to the close of business on October 20, 2022. The proposed rule change is available on the Exchange's website at *www.nyse.com,* at the principal office of the Exchange, and at the Commission's Public Reference Room.

II. Self-Regulatory Organization's Statement of the Purpose of, and Statutory Basis for, the Proposed Rule Change

In its filing with the Commission, the self-regulatory organization included statements concerning the purpose of, and basis for, the proposed rule change and discussed any comments it received on the proposed rule change. The text of those statements may be examined at the places specified in Item IV below. The Exchange has prepared summaries, set forth in sections A, B, and C below, of the most significant parts of such statements.

A. Self-Regulatory Organization's Statement of the Purpose of, and Statutory Basis for, the Proposed Rule Change

1. Purpose

The purpose of the proposed rule change is to extend the current pilot program related to Rule 7.10E (Clearly Erroneous Executions) to the close of business on October 20, 2022. The pilot program is currently due to expire on July 20, 2022.

On September 10, 2010, the Commission approved, on a pilot basis, changes to Rule 7.10E that, among other things: (i) provided for uniform treatment of clearly erroneous execution reviews in multi-stock events involving twenty or more securities; and (ii) reduced the ability of the Exchange to deviate from the objective standards set forth in the rule.[4] In 2013, the Exchange adopted a provision designed to address the operation of the Plan.[5] Finally, in 2014, the Exchange adopted two additional provisions providing that: (i) a series of transactions in a particular security on one or more trading days may be viewed as one event if all such transactions were effected based on the same fundamentally incorrect or grossly misinterpreted issuance information resulting in a severe valuation error for all such transactions; and (ii) in the event of any disruption or malfunction in the operation of the electronic communications and trading facilities of an Exchange, another SRO, or responsible single plan processor in connection with the transmittal or receipt of a trading halt, an Officer, acting on his or her own motion, shall nullify any transaction that occurs after a trading halt has been declared by the primary listing market for a security and before such trading halt has officially ended according to the primary listing market.[6]

These changes were originally scheduled to operate for a pilot period

---

[30] 17 CFR 200.30–3(a)(12).

[1] 15 U.S.C. 78s(b)(1).

[2] 15 U.S.C. 78a.

[3] 17 CFR 240.19b–4.

[4] *See* Securities Exchange Act Release No. 62886 (Sept. 10, 2010), 75 FR 56613 (Sept. 16, 2010) (SR–NYSEAmer-2010–60).

[5] *See* Securities Exchange Act Release No. 68801 (Feb. 1, 2013), 78 FR 8630 (Feb. 6, 2013) (SR–NYSEMKT–2013–11).

[6] *See* Securities Exchange Act Release No. 72434 (June 19, 2014), 79 FR 36110 (June 25, 2014) (SR–NYSEMKT–2014–37).

to coincide with the pilot period for the Plan to Address Extraordinary Market Volatility (the ''Limit Up-Limit Down Plan'' or ''LULD Plan''),[7] including any extensions to the pilot period for the LULD Plan.[8] In April 2019, the Commission approved an amendment to the LULD Plan for it to operate on a permanent, rather than pilot, basis.[9] In light of that change, the Exchange amended Rule 7.10E to untie the pilot's effectiveness from that of the LULD Plan and to extend the pilot's effectiveness to the close of business on October 18, 2019.[10] The Exchange later amended Rule 7.10E to extend the pilot's effectiveness to the close of business on April 20, 2020,[11] October 20, 2020,[12] April 20, 2021,[13] October 20, 2021,[14] April 20, 2022,[15] and July 20, 2022.[16]

The Exchange now proposes to amend Rule 7.10E to extend the pilot's effectiveness for a further three months until the close of business on October 20, 2022 while the Commission considers a proposal to make the pilot program permanent that has been filed by Cboe BZX.[17] If the pilot period is not either extended, replaced or approved as permanent, the prior versions of paragraphs (c), (e)(2), (f), and (g) shall be in effect, and the provisions of paragraphs (i) through (k) shall be null and void.[18] In such an event, the remaining sections of Rule 7.10E would continue to apply to all transactions executed on the Exchange. The Exchange understands that the other national securities exchanges and Financial Industry Regulatory Authority (''FINRA'') will also file similar proposals to extend their respective clearly erroneous execution pilot programs, the substance of which are identical to Rule 7.10E.

The Exchange does not propose any additional changes to Rule 7.10E. Extending the effectiveness of Rule 7.10E for an additional three months will provide the Exchange and other self-regulatory organizations additional time to consider whether further amendments to the clearly erroneous execution rules are appropriate.

2. Statutory Basis

The Exchange believes the proposed rule change is consistent with the requirements of Section 6(b) of the Act,[19] in general, and Section 6(b)(5) of the Act,[20] in particular, in that it is designed to remove impediments to and perfect the mechanism of a free and open market and a national market system, to promote just and equitable principles of trade, and, in general, to protect investors and the public interest and not to permit unfair discrimination between customers, issuers, brokers, or dealers. The Exchange believes that the proposed rule change promotes just and equitable principles of trade in that it promotes transparency and uniformity across markets concerning review of transactions as clearly erroneous. The Exchange believes that extending the clearly erroneous execution pilot under Rule 7.10E for an additional three months would help assure that the determination of whether a clearly erroneous trade has occurred will be based on clear and objective criteria, and that the resolution of the incident will occur promptly through a transparent process. The proposed rule change would also help assure consistent results in handling erroneous trades across the U.S. equities markets, thus furthering fair and orderly markets, the protection of investors and the public interest. Based on the foregoing, the Exchange believes the amended clearly erroneous executions rule should continue to be in effect on a pilot basis while the Exchange and other self-regulatory organizations consider whether further amendments to these rules are appropriate.

B. Self-Regulatory Organization's Statement on Burden on Competition

The Exchange does not believe that the proposed rule change would impose any burden on competition that is not necessary or appropriate in furtherance of the purposes of the Act. The proposal would ensure the continued, uninterrupted operation of harmonized clearly erroneous execution rules across the U.S. equities markets while the Exchange and other self-regulatory organizations consider whether further amendments to these rules are appropriate. The Exchange understands that the other national securities exchanges and FINRA will also file similar proposals to extend their respective clearly erroneous execution pilot programs. Thus, the proposed rule change will help to ensure consistency across market centers without implicating any competitive issues.

C. Self-Regulatory Organization's Statement on Comments on the Proposed Rule Change Received From Members, Participants, or Others

No written comments were solicited or received with respect to the proposed rule change.

III. Date of Effectiveness of the Proposed Rule Change and Timing for Commission Action

The Exchange has filed the proposed rule change pursuant to Section 19(b)(3)(A)(iii) of the Act[21] and Rule 19b–4(f)(6) thereunder.[22] Because the foregoing proposed rule change does not: (i) significantly affect the protection of investors or the public interest; (ii) impose any significant burden on competition; and (iii) become operative for 30 days from the date on which it was filed, or such shorter time as the Commission may designate, it has become effective pursuant to Section 19(b)(3)(A)(iii) of the Act[23] and subparagraph (f)(6) of Rule 19b–4 thereunder.[24]

A proposed rule change filed under Rule 19b–4(f)(6)[25] normally does not become operative prior to 30 days after the date of the filing. However, pursuant to Rule 19b–4(f)(6)(iii),[26] the Commission may designate a shorter time if such action is consistent with the protection of investors and the public interest. The Exchange asked that the Commission waive the 30 day operative

[7] *See* Securities Exchange Act Release No. 67091 (May 31, 2012), 77 FR 33498 (June 6, 2012) (the ''Limit Up-Limit Down Release'').

[8] *See* Securities Exchange Act Release No. 71820 (March 27, 2014), 79 FR 18595 (April 2, 2014) (SR–NYSEMKT–2014–28).

[9] *See* Securities Exchange Act Release No. 85623 (April 11, 2019), 84 FR 16086 (April 17, 2019) (approving Eighteenth Amendment to LULD Plan).

[10] *See* Securities Exchange Act Release No. 85563 (April 9, 2019), 84 FR 15241 (April 15, 2019) (SR–NYSEAMER–2019–11).

[11] *See* Securities Exchange Act Release No. 87354 (October 18, 2019), 84 FR 57139 (October 24, 2019) (SR–NYSEAMER–2019–44).

[12] *See* Securities Exchange Act Release No. 88589 (April 8, 2020), 85 FR 20769 (April 14, 2020) (SR–NYSEAMER–2020–22).

[13] *See* Securities Exchange Act Release No. 90154 (October 13, 2020), 85 FR 66376 (October 19, 2020) (SR–NYSEAMER–2020–73).

[14] *See* Securities Exchange Act Release No. 91552 (April 14, 2021), 86 FR 20583 (April 20, 2021) (SR–NYSEAMER–2021–19).

[15] *See* Securities Exchange Act Release No. 93356 (October 15, 2021), 86 FR 58345 (October 21, 2021) (SR–NYSEAMER–2021–41).

[16] *See* Securities Exchange Act Release No. 94641 (April 7, 2022), 87 FR 21943 (April 13, 2022) (SR–NYSEAMER–2022–18).

[17] *See* SR–CboeBZX–2022–37 (July 8, 2022).

[18] *See* supra notes 4–6. The prior versions of paragraphs (c), (e)(2), (f), and (g) generally provided greater discretion to the Exchange with respect to breaking erroneous trades.

[19] 15 U.S.C. 78f(b).

[20] 15 U.S.C. 78f(b)(5).

[21] 15 U.S.C. 78s(b)(3)(A)(iii).

[22] 17 CFR 240.19b–4(f)(6).

[23] 15 U.S.C. 78s(b)(3)(A)(iii).

[24] 17 CFR 240.19b–4(f)(6). In addition, Rule 19b–4(f)(6)(iii) requires a self-regulatory organization to give the Commission written notice of its intent to file the proposed rule change, along with a brief description and text of the proposed rule change, at least five business days prior to the date of filing of the proposed rule change, or such shorter time as designated by the Commission. The Exchange has satisfied this requirement.

[25] 17 CFR 240.19b–4(f)(6).

[26] 17 CFR 240.19b–4(f)(6)(iii).

delay so that the proposal may become operative immediately upon filing. Waiver of the 30-day operative delay would extend the protections provided by the current pilot program, without any changes, while a permanent proposal for clearly erroneous execution reviews is being considered.[27] For this reason, the Commission hereby waives the 30-day operative delay and designates the proposed rule change as operative upon filing.[28]

At any time within 60 days of the filing of the proposed rule change, the Commission summarily may temporarily suspend such rule change if it appears to the Commission that such action is necessary or appropriate in the public interest, for the protection of investors, or otherwise in furtherance of the purposes of the Act. If the Commission takes such action, the Commission shall institute proceedings to determine whether the proposed rule should be approved or disapproved.

IV. Solicitation of Comments

Interested persons are invited to submit written data, views and arguments concerning the foregoing, including whether the proposed rule change is consistent with the Act. Comments may be submitted by any of the following methods:

Electronic Comments

- Use the Commission's internet comment form (*http://www.sec.gov/rules/sro.shtml*); or
- Send an email to *rule-comments@sec.gov.* Please include File Number SR–NYSEAMER–2022–32 on the subject line.

Paper Comments

- Send paper comments in triplicate to Secretary, Securities and Exchange Commission, 100 F Street NE, Washington, DC 20549–1090.

All submissions should refer to File Number SR–NYSEAMER–2022–32. This file number should be included on the subject line if email is used. To help the Commission process and review your comments more efficiently, please use only one method. The Commission will post all comments on the Commission's internet website (*http://www.sec.gov/rules/sro.shtml*). Copies of the submission, all subsequent amendments, all written statements with respect to the proposed rule change that are filed with the Commission, and all written communications relating to the proposed rule change between the Commission and any person, other than those that may be withheld from the public in accordance with the provisions of 5 U.S.C. 552, will be available for website viewing and printing in the Commission's Public Reference Room, 100 F Street NE, Washington, DC 20549, on official business days between the hours of 10:00 a.m. and 3:00 p.m. Copies of such filing also will be available for inspection and copying at the principal office of the Exchange. All comments received will be posted without change. Persons submitting comments are cautioned that we do not redact or edit personal identifying information from comment submissions. You should submit only information that you wish to make available publicly. All submissions should refer to File Number SR–NYSEAMER–2022–32 and should be submitted on or before August 12, 2022.

For the Commission, by the Division of Trading and Markets, pursuant to delegated authority.[29]

J. Matthew DeLesDernier,

Deputy Secretary.

[FR Doc. 2022–15659 Filed 7–21–22; 8:45 am]

BILLING CODE 8011–01–P

[27] *See* SR–CboeBZX–2022–37 (July 8, 2022).

[28] For purposes only of waiving the 30-day operative delay, the Commission has also considered the proposed rule's impact on efficiency, competition, and capital formation. *See* 15 U.S.C. 78c(f).

[29] 17 CFR 200.30–3(a)(12).

DEPARTMENT OF STATE

[Public Notice: 11794]

Notification of United States-Chile Environmental Affairs Council and Joint Commission for Environmental Cooperation Meetings

ACTION: Notice of the upcoming United States-Chile Environmental Affairs Council and Joint Commission for Environmental Cooperation meetings and request for comments; invitation to public session.

SUMMARY: The Department of State and the Office of the United States Trade Representative are providing notice that the parties to the United States-Chile Free Trade Agreement (FTA) intend to hold the ninth meeting of the Environmental Affairs Council (Council) established under Chapter 19 of the FTA, as well as the seventh meeting of the United States-Chile Joint Commission for Environmental Cooperation (Commission) established under the United States-Chile Environmental Cooperation Agreement (ECA), on August 22, 2022. The Council will review implementation of Chapter 19 (Environment) of the FTA, and the Commission will review implementation of the ECA.

During the Council and Commission meetings, Members will discuss the progress made in implementing Chapter 19 obligations and the impacts of environmental cooperation. The Commission will also explore opportunities for collaboration under Environmental Cooperation Work Program for 2021–2024. More information on the Council and Commission is included below under **SUPPLEMENTARY INFORMATION**.

All interested persons are invited to attend the Council and Commission joint public session in person beginning at 10 a.m. Eastern Daylight Time on August 23, 2022, in Washington, DC. There will also be a link provided for those that would like to participate virtually. Attendees will have the opportunity to ask questions and discuss implementation of Chapter 19 and the ECA with Council and Commission Members and environmental cooperation implementers. At the public session, the Council will receive input from the public on current environmental issues and ideas for future cooperation. The Department of State and Office of the United States Trade Representative invite written comments or suggestions regarding topics to be discussed at the meeting. In preparing comments, we encourage submitters to refer to Chapter 19 of the FTA and the ECA (available at *https://www.state.gov/key-topics-office-of-environmental-quality-and-transboundary-issues/current-trade-agreements-with-environmental-chapters/#chile*). Instructions on how to submit comments are under the heading **ADDRESSES** and RSVP.

DATES: The public session of the Council and Commission will be held on August 23, 2022, from 10:00 a.m. to 12:00 noon Eastern Daylight Time. Please contact Neal Morris and Tia Potskhverashvili for the location of this meeting and connection information for virtual participation. We request RSVPs and any written comments no later than August 15, 2022, in order to facilitate consideration.

ADDRESSES: Written comments or suggestions should be submitted to both:

(1) Neal Morris, U.S. Department of State, Bureau of Oceans and International Environmental and Scientific Affairs, Office of Environmental Quality, by email at *MorrisND@state.gov* with the subject

line ''UNITED STATES-CHILE EAC/JCEC MEETING'' and

(2) Tia Potskhverashvili, Office of the United States Trade Representative, Office of Environment and Natural Resources, by email at *tiapots@ustr.eop.gov* with the subject line ''UNITED STATES-CHILE EAC/JCEC MEETING''

In your RSVP, please include your full name and affiliation.

If you have access to the internet, you can view and comment on this notice by going to: *http://www.regulations.gov/#!home* and searching for docket number DOS– 2022–0020.

FOR FURTHER INFORMATION CONTACT: Neal Morris, (202) 550–6348, *MorrisND@state.gov,* and Tia Potskhverashvili, (202) 395–5414, *tiapots@ustr.eop.gov.*

SUPPLEMENTARY INFORMATION: The United States and Chile negotiated the United States-Chile FTA and United States-Chile ECA in concert, signing the FTA on June 6, 2003, in Miami, USA and the ECA on June 17, 2003, in Santiago, Chile. Article 19.3 of the FTA establishes an Environment Affairs Council (Council). The Council discusses implementation of Chapter 19 of the FTA, and its meetings include a public session. The Joint Commission on Environmental Cooperation (Commission) was established in Article II of the ECA. The Commission evaluates cooperative activities under the ECA, recommends options for improving cooperation, and establishes work programs that reflect national priorities and that identify the scope and focus of environmental cooperation activities. Commission meetings also include a public session.

The Council and Commission last met in September 2018 in Santiago, Chile. The Council reviewed the implementation of the Environment Chapter of the FTA. The Commission approved the 2018–2020 Work Program, which built on previous successes and identified activities to achieve the long-term goals of: (1) strengthening effective implementation and enforcement of environmental laws and regulations; (2) encouraging development and adoption of sound environmental practices and technologies, particularly in business enterprises; (3) promoting sustainable development and management of environmental resources, including wild fauna and flora, protected wild areas, and other ecologically important ecosystems; and (4) encouraging civil society participation in the environmental decision-making process and environmental education.

If you would like to attend the public session, please notify Neal Morris and Tia Potskhverashvili at the email addresses listed above under the heading **ADDRESSES** and RSVP. Please include your full name and identify any organization or group you represent. In preparing comments, we encourage submitters to refer to:

- Chapter 19 of the FTA and
- the ECA.

These documents are available at: *https://www.state.gov/key-topics-office-of-environmental-quality-and-transboundary-issues/current-trade-agreements-with-environmental-chapters/#chile* and *https://ustr.gov/issue-areas/environment/bilateral-and-regional-trade-agreements.* Visit *http://www.state.gov* and the USTR website at *www.ustr.gov* for more information.

Sherry Z. Sykes,

Director, Office of Environmental Quality, U.S. Department of State.

[FR Doc. 2022–15644 Filed 7–21–22; 8:45 am]

BILLING CODE 4710–09–P

DEPARTMENT OF STATE

[Public Notice: 11789]

Notice of Determinations; Additional Culturally Significant Objects Being Imported for Exhibition—Determinations: ''Meret Oppenheim: My Exhibition'' Exhibition

SUMMARY: On January 11, 2022, notice was published on page 1470 of the **Federal Register** (volume 87, number 7) of determinations pertaining to certain objects to be included in an exhibition entitled ''Meret Oppenheim: My Exhibition.'' Notice is hereby given of the following determinations: I hereby determine that certain additional objects being imported from abroad pursuant to agreements with their foreign owners or custodians for temporary display in the aforesaid exhibition at the Museum of Modern Art, New York, New York, and at possible additional exhibitions or venues yet to be determined, are of cultural significance, and, further, that their temporary exhibition or display within the United States as aforementioned is in the national interest. I have ordered that Public Notice of these determinations be published in the **Federal Register**.

FOR FURTHER INFORMATION CONTACT: Chi D. Tran, Program Administrator, Office of the Legal Adviser, U.S. Department of State (telephone: 202–632–6471; email: *section2459@state.gov*). The mailing address is U.S. Department of State, L/PD, 2200 C Street NW (SA–5), Suite 5H03, Washington, DC 20522–0505.

SUPPLEMENTARY INFORMATION: The foregoing determinations were made pursuant to the authority vested in me by the Act of October 19, 1965 (79 Stat. 985; 22 U.S.C. 2459), E.O. 12047 of March 27, 1978, the Foreign Affairs Reform and Restructuring Act of 1998 (112 Stat. 2681, *et seq.;* 22 U.S.C. 6501 note, *et seq.*), Delegation of Authority No. 234 of October 1, 1999, Delegation of Authority No. 236–3 of August 28, 2000, and Delegation of Authority No. 523 of December 22, 2021.

Stacy E. White,

Deputy Assistant Secretary for Professional and Cultural Exchanges, Bureau of Educational and Cultural Affairs, Department of State.

[FR Doc. 2022–15744 Filed 7–21–22; 8:45 am]

BILLING CODE 4710–05–P

SURFACE TRANSPORTATION BOARD

[Docket No. FD 36627]

TGS Cedar Port Railroad LLC—Operation Exemption—in Chambers County, Tex.

TGS Cedar Port Railroad LLC (TGSC), a noncarrier, has filed a verified notice of exemption pursuant to 49 CFR 1150.31 to operate on track extending approximately 1.28 miles from a connection with the Cedar Bayou Industrial Lead at milepost 5.22 in Chambers County, Tex. (a line owned by Union Pacific Railroad Company (UP) and operated over by UP and BNSF Railway Company (BNSF)) to milepost 6.5 (as measured from the southern end of the Cedar Bayou Industrial Lead) (the Line).

This transaction is related to a concurrently filed verified notice of exemption in *Trans-Global Solutions, Inc.—Continuance in Control Exemption—TGS Cedar Port Railroad,* Docket No. FD 36628, in which TGSI seeks to continue in control of TGSC upon TGSC's becoming a Class III rail carrier.

According to the verified notice, the Line is owned by TGSC's affiliate, TGS Cedar Port Partners LP (TGSLP), also a noncarrier, is currently operated as private industrial track by TGSC's parent company, Trans-Global Solutions, Inc. (TGSI), and connects to ancillary track within the TGS Cedar Port Industrial Park (the Park). TGSC states it has reached an agreement with TGSLP pursuant to which TGSC will acquire the right to conduct railroad common carrier service on the Line on or after the effective date of the exemption. TGSC also states that this service, including on the ancillary track within the Park, will constitute the entirety of TGSC's railroad operations,

and as such, that the Board has jurisdiction over the proposed common carrier service under *Effingham Railroad—Petition for Declaratory Order—Construction at Effingham, Ill.,* 2 S.T.B. 606, 608 (1997) and *Effingham Railroad—Operation Exemption—Line Owned by Agracel,* FD 33468 (STB served Sept. 24, 1997).

TGSC certifies that its projected annual revenue will exceed $5 million but that the proposed transaction will not result in TGSC becoming a Class I or Class II rail carrier. TSGC states advance notice under 49 CFR 1150.32(e) is not required because there are currently no common carrier operations on the Line. TGSC also states the proposed transaction will not contractually limit its ability to interchange traffic with any third-party connecting carrier.

The transaction may be consummated on or after August 6, 2022, the effective date of the exemption (30 days after the verified notice was filed).

If the verified notice contains false or misleading information, the exemption is void ab initio. Petitions to revoke the exemption under 49 U.S.C. 10502(d) may be filed at any time. The filing of a petition to revoke will not automatically stay the effectiveness of the exemption. Petitions for stay must be filed no later than July 29, 2022 (at least seven days before the exemption becomes effective).

All pleadings, referring to Docket No. FD 36627, must be filed with the Surface Transportation Board either via e-filing on the Board's website or in writing addressed to 395 E Street SW, Washington, DC 20423–0001. In addition, a copy of each pleading must be served on TGSC's representative, Robert A. Wimbish, Fletcher & Sippel LLC, 29 North Wacker Drive, Suite 800, Chicago, IL 60606–3208.

According to TGSC, this action is categorically excluded from environmental review under 49 CFR 1105.6(c) and from historic preservation reporting requirements under 49 CFR 1105.8(b).

Board decisions and notices are available at *www.stb.gov.*

Decided: July 18, 2022.

By the Board, Mai T. Dinh, Director, Office of Proceedings.

Aretha Laws-Byrum,

Clearance Clerk.

[FR Doc. 2022–15668 Filed 7–21–22; 8:45 am]

BILLING CODE 4915–01–P

SURFACE TRANSPORTATION BOARD

[Docket No. FD 36628]

Trans-Global Solutions, Inc.—Continuance in Control Exemption—TGS Cedar Port Railroad LLC

Trans-Global Solutions Inc. (TGSI), a noncarrier, has filed a verified notice of exemption under 49 CFR 1180.2(d)(2) to continue in control TGS Cedar Port Railroad LLC (TGSC), a noncarrier controlled by TGSI, upon TGSC's becoming a Class III rail carrier. According to the verified notice, the proposed transaction will allow TGSI to continue to exercise common control of TGSC and one other rail carrier, Austin Area Terminal Railroad, Inc. (AATR).

This transaction is related to a concurrently filed verified notice of exemption in *TGS Cedar Port Railroad LLC—Operation Exemption—in Chambers County, Tex.,* Docket No. FD 36627, in which TGSC seeks to begin common carrier operations over approximately 1.28 miles of presently unregulated track in Chambers County, Tex.

The verified notice states that TGSI controls AATR, a Class III railroad that retains operating authority on certain rail lines in and around Austin, Tex.[1] TGSI certifies the proposed transaction does not include a provision restricting future interchange with a third-party connecting carrier.

TGSI represents that: (1) the rail line to be operated by TGSC would not connect with the tracks over which AATR retains operating authority; (2) the control transaction is not part of a series of anticipated transactions that would result in such a connection; and (3) the transaction does not involve a Class I rail carrier. The proposed transaction is therefore exempt from the prior approval requirements of 49 U.S.C. 11323 pursuant to 49 CFR 1180.2(d)(2).

The transaction may be consummated on or after August 6, 2022, the effective date of the exemption (30 days after the verified notice was filed).

Under 49 U.S.C. 10502(g), the Board may not use its exemption authority to relieve a rail carrier of its statutory obligation to protect the interests of its employees. However, 49 U.S.C. 11326(c) does not provide for labor protection for transactions under 49 U.S.C. 11324 and 11325 that involve only Class III rail carriers. Because this transaction involves Class III rail carriers only, the Board, under the statute, may not impose labor protective conditions for this transaction.

If the verified notice contains false or misleading information, the exemption is void ab initio. Petitions to revoke the exemption under 49 U.S.C. 10502(d) may be filed at any time. The filing of a petition to revoke will not automatically stay the effectiveness of the exemption. Petitions for stay must be filed no later than July 29, 2022 (at least seven days before the exemption becomes effective).

All pleadings, referring to Docket No. FD 36628, must be filed with the Surface Transportation Board either via e-filing on the Board's website or in writing addressed to 395 E Street SW, Washington, DC 20423–0001. In addition, one copy of each pleading must be served on TGSI's representative, Robert A. Wimbish, Fletcher & Sippel LLC, 29 North Wacker Drive, Suite 800, Chicago, IL 60606–3208.

According to TGSI, this action is categorically excluded from environmental review under 49 CFR 1105.6(c) and from historic reporting requirements under 49 CFR 1105.8(b).

Board decisions and notices are available at *www.stb.gov.*

Decided: July 18, 2022.

By the Board, Mai T. Dinh, Director, Office of Proceedings.

Aretha Laws-Byrum,

Clearance Clerk.

[FR Doc. 2022–15671 Filed 7–21–22; 8:45 am]

BILLING CODE 4915–01–P

[1] *See Austin W. R.R.—Operation Exemption—Cap. Metro. Transp. Auth.,* FD 35072 (STB served Sept. 14, 2007); *Austin Area Terminal R.R.—Change in Operators Exemption—Trans-Glob. Sols., Inc.,* FD 33972 (STB served Dec. 20, 2002). TGSI asserts that the lines over which AATR used to operate are now exclusively operated by Austin Western Railroad, Inc., and that AATR intends to seek discontinuance authority in the future.

SURFACE TRANSPORTATION BOARD

[Docket No. FD 36627]

TGS Cedar Port Railroad LLC—Operation Exemption—in Chambers County, Tex.

TGS Cedar Port Railroad LLC (TGSC), a noncarrier, has filed a verified notice of exemption pursuant to 49 CFR 1150.31 to operate on track extending approximately 1.28 miles from a connection with the Cedar Bayou Industrial Lead at milepost 5.22 in Chambers County, Tex. (a line owned by Union Pacific Railroad Company (UP) and operated over by UP and BNSF Railway Company (BNSF)) to milepost 6.5 (as measured from the southern end of the Cedar Bayou Industrial Lead) (the Line).

This transaction is related to a concurrently filed verified notice of

exemption in *Trans-Global Solutions, Inc.—Continuance in Control Exemption—TGS Cedar Port Railroad,* Docket No. FD 36628, in which TGSI seeks to continue in control of TGSC upon TGSC's becoming a Class III rail carrier.

According to the verified notice, the Line is owned by TGSC's affiliate, TGS Cedar Port Partners LP (TGSLP), also a noncarrier, is currently operated as private industrial track by TGSC's parent company, Trans-Global Solutions, Inc. (TGSI), and connects to ancillary track within the TGS Cedar Port Industrial Park (the Park). TGSC states it has reached an agreement with TGSLP pursuant to which TGSC will acquire the right to conduct railroad common carrier service on the Line on or after the effective date of the exemption. TGSC also states that this service, including on the ancillary track within the Park, will constitute the entirety of TGSC's railroad operations, and as such, that the Board has jurisdiction over the proposed common carrier service under *Effingham Railroad—Petition for Declaratory Order—Construction at Effingham, Ill.,* 2 S.T.B. 606, 608 (1997) and *Effingham Railroad—Operation Exemption—Line Owned by Agracel,* FD 33468 (STB served Sept. 24, 1997).

TGSC certifies that its projected annual revenue will exceed $5 million but that the proposed transaction will not result in TGSC becoming a Class I or Class II rail carrier. TSGC states advance notice under 49 CFR 1150.32(e) is not required because there are currently no common carrier operations on the Line. TGSC also states the proposed transaction will not contractually limit its ability to interchange traffic with any third-party connecting carrier.

The transaction may be consummated on or after August 6, 2022, the effective date of the exemption (30 days after the verified notice was filed).

If the verified notice contains false or misleading information, the exemption is void ab initio. Petitions to revoke the exemption under 49 U.S.C. 10502(d) may be filed at any time. The filing of a petition to revoke will not automatically stay the effectiveness of the exemption. Petitions for stay must be filed no later than July 29, 2022 (at least seven days before the exemption becomes effective).

All pleadings, referring to Docket No. FD 36627, must be filed with the Surface Transportation Board either via e-filing on the Board's website or in writing addressed to 395 E Street SW, Washington, DC 20423–0001. In addition, a copy of each pleading must be served on TGSC's representative, Robert A. Wimbish, Fletcher & Sippel LLC, 29 North Wacker Drive, Suite 800, Chicago, IL 60606–3208.

According to TGSC, this action is categorically excluded from environmental review under 49 CFR 1105.6(c) and from historic preservation reporting requirements under 49 CFR 1105.8(b).

Board decisions and notices are available at *www.stb.gov.*

Decided: July 18, 2022.

By the Board, Mai T. Dinh, Director, Office of Proceedings.

Aretha Laws-Byrum,

Clearance Clerk.

[FR Doc. 2022–15673 Filed 7–21–22; 8:45 am]

BILLING CODE 4915–01–P

SURFACE TRANSPORTATION BOARD

[Docket No. FD 36614]

Norfolk Southern Railway Company—Trackage Rights Exemption—Union County Industrial Railroad Company

Norfolk Southern Railway Company (NSR) has filed a verified notice of exemption under 49 CFR 1180.2(d)(7) for acquisition of overhead trackage rights over 3.1 miles of rail line leased by Union County Industrial Railroad Company (UCIR) and owned by West Shore Railroad Corporation between NSR milepost BR 246.9, near Milton, Pa., and UCIR milepost 172.62, near New Columbia, Pa. (the Line).

NSR and UCIR have entered into a written trackage rights agreement that grants NSR overhead trackage rights over the Line, allowing NSR to serve the Clemens Food Group Facility, or its successor or assignee.[1]

The transaction may be consummated on or after August 5, 2022, the effective date of the exemption.

As a condition to this exemption, any employees affected by the acquisition of the trackage rights will be protected by the conditions imposed in *Norfolk & Western Railway—Trackage Rights—Burlington Northern, Inc.,* 354 I.C.C. 605 (1978), as modified in *Mendocino Coast Railway—Lease & Operate—California Western Railroad,* 360 I.C.C. 653 (1980).

If the notice contains false or misleading information, the exemption is void ab initio. Petitions to revoke the exemption under 49 U.S.C. 10502(d) may be filed at any time. The filing of a petition to revoke will not automatically stay the effectiveness of the exemption. Petitions for stay must be filed no later than July 29, 2022 (at least seven days before the exemption becomes effective).

All pleadings, referring to Docket No. FD 36614, must be filed with the Surface Transportation Board via e-filing on the Board's website or in writing addressed to 395 E Street SW, Washington, DC 20423–0001. In addition, a copy of each pleading must be served on NSR's representative, William A. Mullins, Baker & Miller PLLC, 2401 Pennsylvania Avenue NW, Suite 300, Washington, DC 20037.

According to NSR, this action is categorically excluded from environmental review under 49 CFR 1105.6(c) and from historic preservation reporting requirements under 49 CFR 1105.8(b).

Board decisions and notices are available at *www.stb.gov.*

Decided: July 18, 2022.

By the Board, Mai T. Dinh, Director, Office of Proceedings.

Regena Smith-Bernard,

Clearance Clerk.

[FR Doc. 2022–15713 Filed 7–21–22; 8:45 am]

BILLING CODE 4915–01–P

SURFACE TRANSPORTATION BOARD

[Docket No. FD 36628]

Trans-Global Solutions, Inc.—Continuance in Control Exemption—TGS Cedar Port Railroad LLC

Trans-Global Solutions Inc. (TGSI), a noncarrier, has filed a verified notice of exemption under 49 CFR 1180.2(d)(2) to continue in control TGS Cedar Port Railroad LLC (TGSC), a noncarrier controlled by TGSI, upon TGSC's becoming a Class III rail carrier. According to the verified notice, the proposed transaction will allow TGSI to continue to exercise common control of TGSC and one other rail carrier, Austin Area Terminal Railroad, Inc. (AATR).

This transaction is related to a concurrently filed verified notice of exemption in *TGS Cedar Port Railroad LLC—Operation Exemption—in Chambers County, Tex.,* Docket No. FD 36627, in which TGSC seeks to begin common carrier operations over approximately 1.28 miles of presently unregulated track in Chambers County, Tex.

The verified notice states that TGSI controls AATR, a Class III railroad that retains operating authority on certain

[1] A redacted version of the trackage rights agreement between NSR and UCIR was filed with the verified notice. An unredacted version of the agreement was submitted to the Board under seal concurrently with a motion for protective order, which is addressed in a separate decision.

rail lines in and around Austin, Tex.[1] TGSI certifies the proposed transaction does not include a provision restricting future interchange with a third-party connecting carrier.

TGSI represents that: (1) the rail line to be operated by TGSC would not connect with the tracks over which AATR retains operating authority; (2) the control transaction is not part of a series of anticipated transactions that would result in such a connection; and (3) the transaction does not involve a Class I rail carrier. The proposed transaction is therefore exempt from the prior approval requirements of 49 U.S.C. 11323 pursuant to 49 CFR 1180.2(d)(2).

The transaction may be consummated on or after August 6, 2022, the effective date of the exemption (30 days after the verified notice was filed).

Under 49 U.S.C. 10502(g), the Board may not use its exemption authority to relieve a rail carrier of its statutory obligation to protect the interests of its employees. However, 49 U.S.C. 11326(c) does not provide for labor protection for transactions under 49 U.S.C. 11324 and 11325 that involve only Class III rail carriers. Because this transaction involves Class III rail carriers only, the Board, under the statute, may not impose labor protective conditions for this transaction.

If the verified notice contains false or misleading information, the exemption is void ab initio. Petitions to revoke the exemption under 49 U.S.C. 10502(d) may be filed at any time. The filing of a petition to revoke will not automatically stay the effectiveness of the exemption. Petitions for stay must be filed no later than July 29, 2022 (at least seven days before the exemption becomes effective).

All pleadings, referring to Docket No. FD 36628, must be filed with the Surface Transportation Board either via e-filing on the Board's website or in writing addressed to 395 E Street SW, Washington, DC 20423–0001. In addition, one copy of each pleading must be served on TGSI's representative, Robert A. Wimbish, Fletcher & Sippel LLC, 29 North Wacker Drive, Suite 800, Chicago, IL 60606–3208.

According to TGSI, this action is categorically excluded from environmental review under 49 CFR 1105.6(c) and from historic reporting requirements under 49 CFR 1105.8(b).

Board decisions and notices are available at *www.stb.gov.*

Decided: July 18, 2022.

By the Board, Mai T. Dinh, Director, Office of Proceedings.

Aretha Laws-Byrum,

Clearance Clerk.

[FR Doc. 2022–15669 Filed 7–21–22; 8:45 am]

BILLING CODE 4915–01–P

[1] *See Austin W. R.R.—Operation Exemption—Cap. Metro. Transp. Auth.,* FD 35072 (STB served Sept. 14, 2007); *Austin Area Terminal R.R.—Change in Operators Exemption—Trans-Glob. Sols., Inc.,* FD 33972 (STB served Dec. 20, 2002). TGSI asserts that the lines over which AATR used to operate are now exclusively operated by Austin Western Railroad, Inc., and that AATR intends to seek discontinuance authority in the future.

DEPARTMENT OF TRANSPORTATION

Maritime Administration

[Docket No. MARAD–2022–0141]

Coastwise Endorsement Eligibility Determination for a Foreign-Built Vessel: Adventure (Motor); Invitation for Public Comments

AGENCY: Maritime Administration, DOT.

ACTION: Notice.

SUMMARY: The Secretary of Transportation, as represented by the Maritime Administration (MARAD), is authorized to issue coastwise endorsement eligibility determinations for foreign-built vessels which will carry no more than twelve passengers for hire. A request for such a determination has been received by MARAD. By this notice, MARAD seeks comments from interested parties as to any effect this action may have on U.S. vessel builders or businesses in the U.S. that use U.S.-flag vessels. Information about the requestor's vessel, including a brief description of the proposed service, is listed below.

DATES: Submit comments on or before August 22, 2022.

ADDRESSES: You may submit comments identified by DOT Docket Number MARAD–2022–0141 by any one of the following methods:

- *Federal eRulemaking Portal:* Go to *http://www.regulations.gov.* Search MARAD–2022–0141 and follow the instructions for submitting comments.
- *Mail or Hand Delivery:* Docket Management Facility is in the West Building, Ground Floor of the U.S. Department of Transportation. The Docket Management Facility location address is: U.S. Department of Transportation, MARAD–2022–0141, 1200 New Jersey Avenue SE, West Building, Room W12–140, Washington, DC 20590, between 9 a.m. and 5 p.m., Monday through Friday, except on Federal holidays.

Note: If you mail or hand-deliver your comments, we recommend that you include your name and a mailing address, an email address, or a telephone number in the body of your document so that we can contact you if we have questions regarding your submission.

Instructions: All submissions received must include the agency name and specific docket number. All comments received will be posted without change to the docket at *www.regulations.gov,* including any personal information provided. For detailed instructions on submitting comments, or to submit comments that are confidential in nature, see the section entitled Public Participation.

FOR FURTHER INFORMATION CONTACT: James Mead, U.S. Department of Transportation, Maritime Administration, 1200 New Jersey Avenue SE, Room W23–459, Washington, DC 20590. Telephone 202–366–5723, Email *James.Mead@dot.gov.*

SUPPLEMENTARY INFORMATION: As described in the application, the intended service of the vessel ADVENTURE is:

—*Intended Commercial Use of Vessel:* ''Scenic tours for 6 or less passengers on Lake Powell above Glen Canyon Dam on the Colorado River.''
—*Geographic Region Including Base of Operations:* ''Arizona and Utah.'' (Base of Operations: Lake Powell, AZ)
—*Vessel Length and Type:* 28′ Motor

The complete application is available for review identified in the DOT docket as MARAD 2022–0141 at *http://www.regulations.gov.* Interested parties may comment on the effect this action may have on U.S. vessel builders or businesses in the U.S. that use U.S.-flag vessels. If MARAD determines, in accordance with 46 U.S.C. 12121 and MARAD's regulations at 46 CFR part 388, that the employment of the vessel in the coastwise trade to carry no more than 12 passengers will have an unduly adverse effect on a U.S.-vessel builder or a business that uses U.S.-flag vessels in that business, MARAD will not issue an approval of the vessel's coastwise endorsement eligibility. Comments should refer to the vessel name, state the commenter's interest in the application, and address the eligibility criteria given in section 388.4 of MARAD's regulations at 46 CFR part 388.

Public Participation

How do I submit comments?

Please submit your comments, including the attachments, following the instructions provided under the above heading entitled **ADDRESSES**. Be advised that it may take a few hours or even days for your comment to be reflected

on the docket. In addition, your comments must be written in English. We encourage you to provide concise comments and you may attach additional documents as necessary. There is no limit on the length of the attachments.

Where do I go to read public comments, and find supporting information?

Go to the docket online at *http://www.regulations.gov,* keyword search MARAD–2022–0141 or visit the Docket Management Facility (see **ADDRESSES** for hours of operation). We recommend that you periodically check the Docket for new submissions and supporting material.

Will my comments be made available to the public?

Yes. Be aware that your entire comment, including your personal identifying information, will be made publicly available.

May I submit comments confidentially?

If you wish to submit comments under a claim of confidentiality, you should submit the information you claim to be confidential commercial information by email to *SmallVessels@dot.gov.* Include in the email subject heading ''Contains Confidential Commercial Information'' or ''Contains CCI'' and state in your submission, with specificity, the basis for any such confidential claim highlighting or denoting the CCI portions. If possible, please provide a summary of your submission that can be made available to the public.

In the event MARAD receives a Freedom of Information Act (FOIA) request for the information, procedures described in the Department's FOIA regulation at 49 CFR 7.29 will be followed. Only information that is ultimately determined to be confidential under those procedures will be exempt from disclosure under FOIA.

Privacy Act

Anyone can search the electronic form of all comments received into any of our dockets by the name of the individual submitting the comment (or signing the comment, if submitted on behalf of an association, business, labor union, etc.). For information on DOT's compliance with the Privacy Act, please visit *https://www.transportation.gov/privacy.*

(Authority: 49 CFR 1.93(a), 46 U.S.C. 55103, 46 U.S.C. 12121)

By Order of the Maritime Administrator.

T. Mitchell Hudson, Jr.,

Secretary, Maritime Administration.

[FR Doc. 2022–15685 Filed 7–21–22; 8:45 am]

BILLING CODE 4910–81–P

DEPARTMENT OF TRANSPORTATION

Maritime Administration

[Docket No. DOT–MARAD–2022–0131]

Request for Comments on the Renewal of a Previously Approved Information Collection: Request for Transfer of Ownership, Registry, and Flag, or Charter, Lease, or Mortgage of U.S. Citizen Owned Documented Vessels

AGENCY: Maritime Administration, DOT.

ACTION: Notice and request for comments.

SUMMARY: The Maritime Administration (MARAD) invites public comments on our intention to request the Office of Management and Budget (OMB) approval to renew an information collection. A **Federal Register** Notice with a 60-day comment period soliciting comments on the following information collection was published on May 12, 2022 (**Federal Register** 21294, Vol. 87, No. 92). The collection involves documenting Transfer of Ownership, Registry, and Flag, or Charter, Lease, or Mortgage of U.S. Citizen owned documented vessels. We are required to publish this notice in the **Federal Register** by the Paperwork Reduction Act of 1995.

DATES: Comments must be submitted on or before August 22, 2022.

ADDRESSES: You may submit comments identified by Docket No. DOT–MARAD–2022–0131 through one of the following methods:

- *Federal eRulemaking Portal: www.regulations.gov.* Search using the above DOT docket number and follow the online instructions for submitting comments.
- *Fax:* 1–202–493–2251
- *Mail or Hand Delivery:* Docket Management Facility, U.S. Department of Transportation, 1200 New Jersey Avenue SE, West Building, Room W12–140, Washington, DC 20590, between 9 a.m. and 5 p.m., Monday through Friday, except on Federal holidays.

Instructions: All submissions must include the agency name and docket number for this rulemaking.

Note: All comments received will be posted without change to *www.regulations.gov* including any personal information provided.

Comments are invited on: (a) whether the proposed collection of information is necessary for the Department's performance; (b) the accuracy of the estimated burden; (c) ways for the Department to enhance the quality, utility and clarity of the information collection; and (d) ways that the burden could be minimized without reducing the quality of the collected information. The agency will summarize and/or include your comments in the request for OMB's clearance of this information collection.

Electronic Access and Filing

A copy of the notice may be viewed online at *www.regulations.gov* using the docket number listed above. A copy of this notice will be placed in the docket. Electronic retrieval help and guidelines are available on the website. It is available 24 hours each day, 365 days each year. An electronic copy of this document may also be downloaded from the Office of the Federal Register's website at *www.FederalRegister.gov* and the Government Publishing Office's website at *www.GovInfo.gov.*

FOR FURTHER INFORMATION CONTACT: Katrina McRae, Vessel Transfer Specialist, Office of Sealift Support, U.S. Department of Transportation, Maritime Administration, 1200 New Jersey Avenue SE, Washington, DC, 20590, (202) 366–3198, *katrina.mcrae@dot.gov*

SUPPLEMENTARY INFORMATION:

Title: Request for Transfer of Ownership, Registry, and Flag, or Charter, Lease, or Mortgage of U.S.-Citizen Owned Documented Vessels.

OMB Control Number: 2133–0006.

Type of Request: Extension of currently approved collection.

Background: This collection provides information necessary for MARAD to approve the sale, transfer, charter, lease, or mortgage of U.S. documented vessels to non-citizens, or the transfer of such vessels to foreign registry and flag, or the transfer of foreign flag vessels by their owners as required by various contractual requirements. The information will enable MARAD to determine whether the vessel proposed for transfer will initially require retention under the U.S.-flag statutory regulations.

Respondents: Vessel owners who have applied for foreign transfer of U.S.-flag vessels.

Affected Public: Business or other for Profit.

Estimated Number of Respondents: 85.

Estimated Number of Responses: 85.

Estimated Hours per Response: 2 hours.

Estimated Total Annual Burden Hours: 170.

Frequency of Collection: Annually.

(Authority: The Paperwork Reduction Act of 1995; 44 U.S.C. Chapter 35, as amended; and 49 CFR 1.93.)

By Order of the Maritime Administrator.

T. Mitchell Hudson, Jr.,

Secretary, Maritime Administration.

[FR Doc. 2022–15697 Filed 7–21–22; 8:45 am]

BILLING CODE 4910–81–P

DEPARTMENT OF TRANSPORTATION

Maritime Administration

[Docket No. MARAD–2022–0143]

Coastwise Endorsement Eligibility Determination for a Foreign-Built Vessel: ODYSSEY (Sail); Invitation for Public Comments

AGENCY: Maritime Administration, DOT.

ACTION: Notice.

SUMMARY: The Secretary of Transportation, as represented by the Maritime Administration (MARAD), is authorized to issue coastwise endorsement eligibility determinations for foreign-built vessels which will carry no more than twelve passengers for hire. A request for such a determination has been received by MARAD. By this notice, MARAD seeks comments from interested parties as to any effect this action may have on U.S. vessel builders or businesses in the U.S. that use U.S.-flag vessels. Information about the requestor's vessel, including a brief description of the proposed service, is listed below.

DATES: Submit comments on or before August 22, 2022.

ADDRESSES: You may submit comments identified by DOT Docket Number MARAD–2022–0143 by any one of the following methods:

- *Federal eRulemaking Portal:* Go to *http://www.regulations.gov.* Search MARAD–2022–0143 and follow the instructions for submitting comments.
- *Mail or Hand Delivery:* Docket Management Facility is in the West Building, Ground Floor of the U.S. Department of Transportation. The Docket Management Facility location address is: U.S. Department of Transportation, MARAD–2022–0143, 1200 New Jersey Avenue SE, West Building, Room W12–140, Washington, DC 20590, between 9 a.m. and 5 p.m., Monday through Friday, except on Federal holidays.

Note: If you mail or hand-deliver your comments, we recommend that you include your name and a mailing address, an email address, or a telephone number in the body of your document so that we can contact you if we have questions regarding your submission.

Instructions: All submissions received must include the agency name and specific docket number. All comments received will be posted without change to the docket at *www.regulations.gov,* including any personal information provided. For detailed instructions on submitting comments, or to submit comments that are confidential in nature, see the section entitled Public Participation.

FOR FURTHER INFORMATION CONTACT: James Mead, U.S. Department of Transportation, Maritime Administration, 1200 New Jersey Avenue SE, Room W23–459, Washington, DC 20590. Telephone 202–366–5723, Email *James.Mead@dot.gov.*

SUPPLEMENTARY INFORMATION: As described in the application, the intended service of the vessel ODYSSEY is:

—*Intended Commercial Use of Vessel:* ''Tourism charters on Lake Clark in Alaska.''

—*Geographic Region Including Base of Operations:* ''Alaska, Hawaii, Washington, Oregon, California.'' (Base of Operations: Port Alsworth, AK)

—*Vessel Length and Type:* 50′ Sail (Catamaran)

The complete application is available for review identified in the DOT docket as MARAD 2022–0143 at *http://www.regulations.gov.* Interested parties may comment on the effect this action may have on U.S. vessel builders or businesses in the U.S. that use U.S.-flag vessels. If MARAD determines, in accordance with 46 U.S.C. 12121 and MARAD's regulations at 46 CFR part 388, that the employment of the vessel in the coastwise trade to carry no more than 12 passengers will have an unduly adverse effect on a U.S.-vessel builder or a business that uses U.S.-flag vessels in that business, MARAD will not issue an approval of the vessel's coastwise endorsement eligibility. Comments should refer to the vessel name, state the commenter's interest in the application, and address the eligibility criteria given in section 388.4 of MARAD's regulations at 46 CFR part 388.

Public Participation

How do I submit comments?

Please submit your comments, including the attachments, following the instructions provided under the above heading entitled **ADDRESSES**. Be advised that it may take a few hours or even days for your comment to be reflected on the docket. In addition, your comments must be written in English. We encourage you to provide concise comments and you may attach additional documents as necessary. There is no limit on the length of the attachments.

Where do I go to read public comments, and find supporting information?

Go to the docket online at *http://www.regulations.gov,* keyword search MARAD–2022–0143 or visit the Docket Management Facility (see **ADDRESSES** for hours of operation). We recommend that you periodically check the Docket for new submissions and supporting material.

Will my comments be made available to the public?

Yes. Be aware that your entire comment, including your personal identifying information, will be made publicly available.

May I submit comments confidentially?

If you wish to submit comments under a claim of confidentiality, you should submit the information you claim to be confidential commercial information by email to *SmallVessels@dot.gov.* Include in the email subject heading ''Contains Confidential Commercial Information'' or ''Contains CCI'' and state in your submission, with specificity, the basis for any such confidential claim highlighting or denoting the CCI portions. If possible, please provide a summary of your submission that can be made available to the public.

In the event MARAD receives a Freedom of Information Act (FOIA) request for the information, procedures described in the Department's FOIA regulation at 49 CFR 7.29 will be followed. Only information that is ultimately determined to be confidential under those procedures will be exempt from disclosure under FOIA.

Privacy Act

Anyone can search the electronic form of all comments received into any of our dockets by the name of the individual submitting the comment (or signing the comment, if submitted on behalf of an association, business, labor union, etc.). For information on DOT's compliance with the Privacy Act, please visit *https://www.transportation.gov/privacy.*

(Authority: 49 CFR 1.93(a), 46 U.S.C. 55103, 46 U.S.C. 12121)

By Order of the Maritime Administrator.

T. Mitchell Hudson, Jr.,

Secretary, Maritime Administration.

[FR Doc. 2022–15693 Filed 7–21–22; 8:45 am]

BILLING CODE 4910–81–P

DEPARTMENT OF TRANSPORTATION

Maritime Administration

[Docket No. MARAD–2022–0135]

Coastwise Endorsement Eligibility Determination for a Foreign-Built Vessel: RAPSCALLION (Sail); Invitation for Public Comments

AGENCY: Maritime Administration, DOT.

ACTION: Notice.

SUMMARY: The Secretary of Transportation, as represented by the Maritime Administration (MARAD), is authorized to issue coastwise endorsement eligibility determinations for foreign-built vessels which will carry no more than twelve passengers for hire. A request for such a determination has been received by MARAD. By this notice, MARAD seeks comments from interested parties as to any effect this action may have on U.S. vessel builders or businesses in the U.S. that use U.S.-flag vessels. Information about the requestor's vessel, including a brief description of the proposed service, is listed below.

DATES: Submit comments on or before August 22, 2022.

ADDRESSES: You may submit comments identified by DOT Docket Number MARAD–2022–0135 by any one of the following methods:

- *Federal eRulemaking Portal:* Go to *http://www.regulations.gov.* Search MARAD–2022–0135 and follow the instructions for submitting comments.
- *Mail or Hand Delivery:* Docket Management Facility is in the West Building, Ground Floor of the U.S. Department of Transportation. The Docket Management Facility location address is: U.S. Department of Transportation, MARAD–2022–0135, 1200 New Jersey Avenue SE, West Building, Room W12–140, Washington, DC 20590, between 9 a.m. and 5 p.m., Monday through Friday, except on Federal holidays.

Note: If you mail or hand-deliver your comments, we recommend that you include your name and a mailing address, an email address, or a telephone number in the body of your document so that we can contact you if we have questions regarding your submission.

Instructions: All submissions received must include the agency name and specific docket number. All comments received will be posted without change to the docket at *www.regulations.gov,* including any personal information provided. For detailed instructions on submitting comments, or to submit comments that are confidential in nature, see the section entitled Public Participation.

FOR FURTHER INFORMATION CONTACT: James Mead, U.S. Department of Transportation, Maritime Administration, 1200 New Jersey Avenue SE, Room W23–459, Washington, DC 20590. Telephone 202–366–5723, Email *James.Mead@dot.gov.*

SUPPLEMENTARY INFORMATION: As described in the application, the intended service of the vessel RAPSCALLION is:

—*Intended Commercial Use of Vessel:* ''Charters.''
—*Geographic Region Including Base of Operations:* ''Florida, Massachusetts, New York, New Jersey, Connecticut.'' (Base of Operations: Miami, FL)
—*Vessel Length and Type:* 45.7′ Sail (Catamaran)

The complete application is available for review identified in the DOT docket as MARAD 2022–0135 at *http://www.regulations.gov.* Interested parties may comment on the effect this action may have on U.S. vessel builders or businesses in the U.S. that use U.S.-flag vessels. If MARAD determines, in accordance with 46 U.S.C. 12121 and MARAD's regulations at 46 CFR part 388, that the employment of the vessel in the coastwise trade to carry no more than 12 passengers will have an unduly adverse effect on a U.S.-vessel builder or a business that uses U.S.-flag vessels in that business, MARAD will not issue an approval of the vessel's coastwise endorsement eligibility. Comments should refer to the vessel name, state the commenter's interest in the application, and address the eligibility criteria given in section 388.4 of MARAD's regulations at 46 CFR part 388.

Public Participation

How do I submit comments?

Please submit your comments, including the attachments, following the instructions provided under the above heading entitled **ADDRESSES**. Be advised that it may take a few hours or even days for your comment to be reflected on the docket. In addition, your comments must be written in English. We encourage you to provide concise comments and you may attach additional documents as necessary. There is no limit on the length of the attachments.

Where do I go to read public comments, and find supporting information?

Go to the docket online at *http://www.regulations.gov,* keyword search MARAD–2022–0135 or visit the Docket Management Facility (see **ADDRESSES** for hours of operation). We recommend that you periodically check the Docket for new submissions and supporting material.

Will my comments be made available to the public?

Yes. Be aware that your entire comment, including your personal identifying information, will be made publicly available.

May I submit comments confidentially?

If you wish to submit comments under a claim of confidentiality, you should submit the information you claim to be confidential commercial information by email to *SmallVessels@dot.gov.* Include in the email subject heading ''Contains Confidential Commercial Information'' or ''Contains CCI'' and state in your submission, with specificity, the basis for any such confidential claim highlighting or denoting the CCI portions. If possible, please provide a summary of your submission that can be made available to the public.

In the event MARAD receives a Freedom of Information Act (FOIA) request for the information, procedures described in the Department's FOIA regulation at 49 CFR 7.29 will be followed. Only information that is ultimately determined to be confidential under those procedures will be exempt from disclosure under FOIA.

Privacy Act

Anyone can search the electronic form of all comments received into any of our dockets by the name of the individual submitting the comment (or signing the comment, if submitted on behalf of an association, business, labor union, etc.). For information on DOT's compliance with the Privacy Act, please visit *https://www.transportation.gov/privacy.*

(Authority: 49 CFR 1.93(a), 46 U.S.C. 55103, 46 U.S.C. 12121)

By Order of the Maritime Administrator.

T. Mitchell Hudson, Jr.,

Secretary, Maritime Administration.

[FR Doc. 2022–15694 Filed 7–21–22; 8:45 am]

BILLING CODE 4910–81–P

DEPARTMENT OF TRANSPORTATION

Maritime Administration

[Docket No. MARAD–2022–0140]

Coastwise Endorsement Eligibility Determination for a Foreign-Built Vessel: ISLAND TEMPUS (Motor); Invitation for Public Comments

AGENCY: Maritime Administration, DOT.

ACTION: Notice.

SUMMARY: The Secretary of Transportation, as represented by the Maritime Administration (MARAD), is authorized to issue coastwise endorsement eligibility determinations for foreign-built vessels which will carry no more than twelve passengers for hire. A request for such a determination has been received by MARAD. By this notice, MARAD seeks comments from interested parties as to any effect this action may have on U.S. vessel builders or businesses in the U.S. that use U.S.-flag vessels. Information about the requestor's vessel, including a brief description of the proposed service, is listed below.

DATES: Submit comments on or before August 22, 2022.

ADDRESSES: You may submit comments identified by DOT Docket Number MARAD–2022–0140 by any one of the following methods:

- *Federal eRulemaking Portal:* Go to *http://www.regulations.gov.* Search MARAD–2022–0140 and follow the instructions for submitting comments.
- *Mail or Hand Delivery:* Docket Management Facility is in the West Building, Ground Floor of the U.S. Department of Transportation. The Docket Management Facility location address is: U.S. Department of Transportation, MARAD–2022–0140, 1200 New Jersey Avenue SE, West Building, Room W12–140, Washington, DC 20590, between 9 a.m. and 5 p.m., Monday through Friday, except on Federal holidays.

Note: If you mail or hand-deliver your comments, we recommend that you include your name and a mailing address, an email address, or a telephone number in the body of your document so that we can contact you if we have questions regarding your submission.

Instructions: All submissions received must include the agency name and specific docket number. All comments received will be posted without change to the docket at *www.regulations.gov,* including any personal information provided. For detailed instructions on submitting comments, or to submit comments that are confidential in nature, see the section entitled Public Participation.

FOR FURTHER INFORMATION CONTACT: James Mead, U.S. Department of Transportation, Maritime Administration, 1200 New Jersey Avenue SE, Room W23–459, Washington, DC 20590. Telephone 202–366–5723, Email *James.Mead@dot.gov.*

SUPPLEMENTARY INFORMATION: As described in the application, the intended service of the vessel ISLAND TEMPUS is:

—*Intended Commercial Use of Vessel:* ''Private charter.''
—*Geographic Region Including Base of Operations:* ''Louisiana, Mississippi, Alabama, Florida.'' (Base of Operations: Orange Beach, AL)
—*Vessel Length and Type:* 54′ Motor

The complete application is available for review identified in the DOT docket as MARAD 2022–0140 at *http://www.regulations.gov.* Interested parties may comment on the effect this action may have on U.S. vessel builders or businesses in the U.S. that use U.S.-flag vessels. If MARAD determines, in accordance with 46 U.S.C. 12121 and MARAD's regulations at 46 CFR part 388, that the employment of the vessel in the coastwise trade to carry no more than 12 passengers will have an unduly adverse effect on a U.S.-vessel builder or a business that uses U.S.-flag vessels in that business, MARAD will not issue an approval of the vessel's coastwise endorsement eligibility. Comments should refer to the vessel name, state the commenter's interest in the application, and address the eligibility criteria given in section 388.4 of MARAD's regulations at 46 CFR part 388.

Public Participation

How do I submit comments?

Please submit your comments, including the attachments, following the instructions provided under the above heading entitled **ADDRESSES**. Be advised that it may take a few hours or even days for your comment to be reflected on the docket. In addition, your comments must be written in English. We encourage you to provide concise comments and you may attach additional documents as necessary. There is no limit on the length of the attachments.

Where do I go to read public comments, and find supporting information?

Go to the docket online at *http://www.regulations.gov,* keyword search MARAD–2022–0140 or visit the Docket Management Facility (see **ADDRESSES** for hours of operation). We recommend that you periodically check the Docket for new submissions and supporting material.

Will my comments be made available to the public?

Yes. Be aware that your entire comment, including your personal identifying information, will be made publicly available.

May I submit comments confidentially?

If you wish to submit comments under a claim of confidentiality, you should submit the information you claim to be confidential commercial information by email to *SmallVessels@dot.gov.* Include in the email subject heading ''Contains Confidential Commercial Information'' or ''Contains CCI'' and state in your submission, with specificity, the basis for any such confidential claim highlighting or denoting the CCI portions. If possible, please provide a summary of your submission that can be made available to the public.

In the event MARAD receives a Freedom of Information Act (FOIA) request for the information, procedures described in the Department's FOIA regulation at 49 CFR 7.29 will be followed. Only information that is ultimately determined to be confidential under those procedures will be exempt from disclosure under FOIA.

Privacy Act

Anyone can search the electronic form of all comments received into any of our dockets by the name of the individual submitting the comment (or signing the comment, if submitted on behalf of an association, business, labor union, etc.). For information on DOT's compliance with the Privacy Act, please visit *https://www.transportation.gov/privacy.*

(Authority: 49 CFR 1.93(a), 46 U.S.C. 55103, 46 U.S.C. 12121)

By Order of the Maritime Administrator.

T. Mitchell Hudson, Jr.,

Secretary, Maritime Administration.

[FR Doc. 2022–15690 Filed 7–21–22; 8:45 am]

BILLING CODE 4910–81–P

DEPARTMENT OF TRANSPORTATION

Maritime Administration

[Docket No. MARAD–2022–0138]

Coastwise Endorsement Eligibility Determination for a Foreign-Built Vessel: MORDIDITA (Motor); Invitation for Public Comments

AGENCY: Maritime Administration, DOT.

ACTION: Notice.

SUMMARY: The Secretary of Transportation, as represented by the Maritime Administration (MARAD), is authorized to issue coastwise endorsement eligibility determinations for foreign-built vessels which will carry no more than twelve passengers for hire. A request for such a determination has been received by MARAD. By this notice, MARAD seeks comments from interested parties as to any effect this action may have on U.S. vessel builders or businesses in the U.S. that use U.S.-flag vessels. Information about the requestor's vessel, including a brief description of the proposed service, is listed below.

DATES: Submit comments on or before August 22, 2022.

ADDRESSES: You may submit comments identified by DOT Docket Number MARAD–2022–0138 by any one of the following methods:

- *Federal eRulemaking Portal:* Go to *http://www.regulations.gov.* Search MARAD–2022–0138 and follow the instructions for submitting comments.
- *Mail or Hand Delivery:* Docket Management Facility is in the West Building, Ground Floor of the U.S. Department of Transportation. The Docket Management Facility location address is: U.S. Department of Transportation, MARAD–2022–0138, 1200 New Jersey Avenue SE, West Building, Room W12–140, Washington, DC 20590, between 9 a.m. and 5 p.m., Monday through Friday, except on Federal holidays.

Note: If you mail or hand-deliver your comments, we recommend that you include your name and a mailing address, an email address, or a telephone number in the body of your document so that we can contact you if we have questions regarding your submission.

Instructions: All submissions received must include the agency name and specific docket number. All comments received will be posted without change to the docket at *www.regulations.gov,* including any personal information provided. For detailed instructions on submitting comments, or to submit comments that are confidential in nature, see the section entitled Public Participation.

FOR FURTHER INFORMATION CONTACT: James Mead, U.S. Department of Transportation, Maritime Administration, 1200 New Jersey Avenue SE, Room W23–459, Washington, DC 20590. Telephone 202–366–5723, Email *James.Mead@dot.gov.*

SUPPLEMENTARY INFORMATION: As described in the application, the intended service of the vessel MORDIDITA is:

—*Intended Commercial Use of Vessel:* ''Recreational and Commercial Charters.''

—*Geographic Region Including Base of Operations:* ''Puerto Rico.'' (Base of Operations: Marina Puerto del Rey, PR)

—*Vessel Length and Type:* 40′ Motor

The complete application is available for review identified in the DOT docket as MARAD 2022–0138 at *http://www.regulations.gov.* Interested parties may comment on the effect this action may have on U.S. vessel builders or businesses in the U.S. that use U.S.-flag vessels. If MARAD determines, in accordance with 46 U.S.C. 12121 and MARAD's regulations at 46 CFR part 388, that the employment of the vessel in the coastwise trade to carry no more than 12 passengers will have an unduly adverse effect on a U.S.-vessel builder or a business that uses U.S.-flag vessels in that business, MARAD will not issue an approval of the vessel's coastwise endorsement eligibility. Comments should refer to the vessel name, state the commenter's interest in the application, and address the eligibility criteria given in section 388.4 of MARAD's regulations at 46 CFR part 388.

Public Participation

How do I submit comments?

Please submit your comments, including the attachments, following the instructions provided under the above heading entitled **ADDRESSES**. Be advised that it may take a few hours or even days for your comment to be reflected on the docket. In addition, your comments must be written in English. We encourage you to provide concise comments and you may attach additional documents as necessary. There is no limit on the length of the attachments.

Where do I go to read public comments, and find supporting information?

Go to the docket online at *http://www.regulations.gov,* keyword search MARAD–2022–0138 or visit the Docket Management Facility (see **ADDRESSES** for hours of operation). We recommend that you periodically check the Docket for new submissions and supporting material.

Will my comments be made available to the public?

Yes. Be aware that your entire comment, including your personal identifying information, will be made publicly available.

May I submit comments confidentially?

If you wish to submit comments under a claim of confidentiality, you should submit the information you claim to be confidential commercial information by email to *SmallVessels@dot.gov.* Include in the email subject heading ''Contains Confidential Commercial Information'' or ''Contains CCI'' and state in your submission, with specificity, the basis for any such confidential claim highlighting or denoting the CCI portions. If possible, please provide a summary of your submission that can be made available to the public.

In the event MARAD receives a Freedom of Information Act (FOIA) request for the information, procedures described in the Department's FOIA regulation at 49 CFR 7.29 will be followed. Only information that is ultimately determined to be confidential under those procedures will be exempt from disclosure under FOIA.

Privacy Act

Anyone can search the electronic form of all comments received into any of our dockets by the name of the individual submitting the comment (or signing the comment, if submitted on behalf of an association, business, labor union, etc.). For information on DOT's compliance with the Privacy Act, please visit *https://www.transportation.gov/privacy.*

(Authority: 49 CFR 1.93(a), 46 U.S.C. 55103, 46 U.S.C. 12121)

By Order of the Maritime Administrator.

T. Mitchell Hudson, Jr.,

Secretary, Maritime Administration.

[FR Doc. 2022–15692 Filed 7–21–22; 8:45 am]

BILLING CODE 4910–81–P

DEPARTMENT OF TRANSPORTATION

Maritime Administration

[Docket No. MARAD–2022–0134]

Coastwise Endorsement Eligibility Determination for a Foreign-Built Vessel: FELICITA (Motor); Invitation for Public Comments

AGENCY: Maritime Administration, DOT.

ACTION: Notice.

SUMMARY: The Secretary of Transportation, as represented by the Maritime Administration (MARAD), is authorized to issue coastwise endorsement eligibility determinations for foreign-built vessels which will carry no more than twelve passengers for hire. A request for such a determination has been received by MARAD. By this

notice, MARAD seeks comments from interested parties as to any effect this action may have on U.S. vessel builders or businesses in the U.S. that use U.S.-flag vessels. Information about the requestor's vessel, including a brief description of the proposed service, is listed below.

DATES: Submit comments on or before August 22, 2022.

ADDRESSES: You may submit comments identified by DOT Docket Number MARAD–2022–0134 by any one of the following methods:

- *Federal eRulemaking Portal:* Go to *http://www.regulations.gov.* Search MARAD–2022–0134 and follow the instructions for submitting comments.
- *Mail or Hand Delivery:* Docket Management Facility is in the West Building, Ground Floor of the U.S. Department of Transportation. The Docket Management Facility location address is: U.S. Department of Transportation, MARAD–2022–0134, 1200 New Jersey Avenue SE, West Building, Room W12–140, Washington, DC 20590, between 9 a.m. and 5 p.m., Monday through Friday, except on Federal holidays.

Note: If you mail or hand-deliver your comments, we recommend that you include your name and a mailing address, an email address, or a telephone number in the body of your document so that we can contact you if we have questions regarding your submission.

Instructions: All submissions received must include the agency name and specific docket number. All comments received will be posted without change to the docket at *www.regulations.gov,* including any personal information provided. For detailed instructions on submitting comments, or to submit comments that are confidential in nature, see the section entitled Public Participation.

FOR FURTHER INFORMATION CONTACT: James Mead, U.S. Department of Transportation, Maritime Administration, 1200 New Jersey Avenue SE, Room W23–459, Washington, DC 20590. Telephone 202–366–5723, Email *James.Mead@dot.gov.*

SUPPLEMENTARY INFORMATION: As described in the application, the intended service of the vessel FELICITA is:

—*Intended Commercial Use of Vessel:* ''Private vessel charters, passengers only.''

—*Geographic Region Including Base of Operations:* ''Maine, New Hampshire, Massachusetts, Rhode Island, Connecticut, New York (excluding waters in New York Harbor), New Jersey, Pennsylvania, Delaware, Maryland, Virginia, North Carolina, South Carolina, Georgia, Florida, California, Oregon, Washington, and Alaska (excluding waters in Southeastern Alaska).'' (Base of Operations: Marina del Rey, CA)

—*Vessel Length and Type:* 98.6′ Motor

The complete application is available for review identified in the DOT docket as MARAD 2022–0134 at *http://www.regulations.gov.* Interested parties may comment on the effect this action may have on U.S. vessel builders or businesses in the U.S. that use U.S.-flag vessels. If MARAD determines, in accordance with 46 U.S.C. 12121 and MARAD's regulations at 46 CFR part 388, that the employment of the vessel in the coastwise trade to carry no more than 12 passengers will have an unduly adverse effect on a U.S.-vessel builder or a business that uses U.S.-flag vessels in that business, MARAD will not issue an approval of the vessel's coastwise endorsement eligibility. Comments should refer to the vessel name, state the commenter's interest in the application, and address the eligibility criteria given in section 388.4 of MARAD's regulations at 46 CFR part 388.

Public Participation

How do I submit comments?

Please submit your comments, including the attachments, following the instructions provided under the above heading entitled **ADDRESSES**. Be advised that it may take a few hours or even days for your comment to be reflected on the docket. In addition, your comments must be written in English. We encourage you to provide concise comments and you may attach additional documents as necessary. There is no limit on the length of the attachments.

Where do I go to read public comments, and find supporting information?

Go to the docket online at *http://www.regulations.gov,* keyword search MARAD–2022–0134 or visit the Docket Management Facility (see **ADDRESSES** for hours of operation). We recommend that you periodically check the Docket for new submissions and supporting material.

Will my comments be made available to the public?

Yes. Be aware that your entire comment, including your personal identifying information, will be made publicly available.

May I submit comments confidentially?

If you wish to submit comments under a claim of confidentiality, you should submit the information you claim to be confidential commercial information by email to *SmallVessels@dot.gov.* Include in the email subject heading ''Contains Confidential Commercial Information'' or ''Contains CCI'' and state in your submission, with specificity, the basis for any such confidential claim highlighting or denoting the CCI portions. If possible, please provide a summary of your submission that can be made available to the public.

In the event MARAD receives a Freedom of Information Act (FOIA) request for the information, procedures described in the Department's FOIA regulation at 49 CFR 7.29 will be followed. Only information that is ultimately determined to be confidential under those procedures will be exempt from disclosure under FOIA.

Privacy Act

Anyone can search the electronic form of all comments received into any of our dockets by the name of the individual submitting the comment (or signing the comment, if submitted on behalf of an association, business, labor union, etc.). For information on DOT's compliance with the Privacy Act, please visit *https://www.transportation.gov/privacy.*

(Authority: 49 CFR 1.93(a), 46 U.S.C. 55103, 46 U.S.C. 12121)

By Order of the Maritime Administrator.

T. Mitchell Hudson, Jr.,

Secretary, Maritime Administration.

[FR Doc. 2022–15689 Filed 7–21–22; 8:45 am]

BILLING CODE 4910–81–P

DEPARTMENT OF TRANSPORTATION

Maritime Administration

[Docket No. MARAD–2022–0139]

Coastwise Endorsement Eligibility Determination for a Foreign-Built Vessel: VOYAGER (Motor); Invitation for Public Comments

AGENCY: Maritime Administration, DOT.

ACTION: Notice.

SUMMARY: The Secretary of Transportation, as represented by the Maritime Administration (MARAD), is authorized to issue coastwise endorsement eligibility determinations for foreign-built vessels which will carry no more than twelve passengers for hire. A request for such a determination has been received by MARAD. By this notice, MARAD seeks comments from interested parties as to any effect this action may have on U.S. vessel builders

or businesses in the U.S. that use U.S.-flag vessels. Information about the requestor's vessel, including a brief description of the proposed service, is listed below.

DATES: Submit comments on or before August 22, 2022.

ADDRESSES: You may submit comments identified by DOT Docket Number MARAD–2022–0139 by any one of the following methods:

- *Federal eRulemaking Portal:* Go to *http://www.regulations.gov.* Search MARAD–2022–0139 and follow the instructions for submitting comments.
- *Mail or Hand Delivery:* Docket Management Facility is in the West Building, Ground Floor of the U.S. Department of Transportation. The Docket Management Facility location address is: U.S. Department of Transportation, MARAD–2022–0139, 1200 New Jersey Avenue SE, West Building, Room W12–140, Washington, DC 20590, between 9 a.m. and 5 p.m., Monday through Friday, except on Federal holidays.

Note: If you mail or hand-deliver your comments, we recommend that you include your name and a mailing address, an email address, or a telephone number in the body of your document so that we can contact you if we have questions regarding your submission.

Instructions: All submissions received must include the agency name and specific docket number. All comments received will be posted without change to the docket at *www.regulations.gov,* including any personal information provided. For detailed instructions on submitting comments, or to submit comments that are confidential in nature, see the section entitled Public Participation.

FOR FURTHER INFORMATION CONTACT: James Mead, U.S. Department of Transportation, Maritime Administration, 1200 New Jersey Avenue SE, Room W23–459, Washington, DC 20590. Telephone 202–366–5723, Email *James.Mead@dot.gov.*

SUPPLEMENTARY INFORMATION: As described in the application, the intended service of the vessel VOYAGER is:

—*Intended Commercial Use of Vessel:* ''Passenger charter, 12 or fewer guests.''
—*Geographic Region Including Base of Operations:* ''Washington.'' (Base of Operations: Seattle, WA)
—*Vessel Length and Type:* 90′ Motor

The complete application is available for review identified in the DOT docket as MARAD 2022–0139 at *http://www.regulations.gov.* Interested parties may comment on the effect this action may have on U.S. vessel builders or businesses in the U.S. that use U.S.-flag vessels. If MARAD determines, in accordance with 46 U.S.C. 12121 and MARAD's regulations at 46 CFR part 388, that the employment of the vessel in the coastwise trade to carry no more than 12 passengers will have an unduly adverse effect on a U.S.-vessel builder or a business that uses U.S.-flag vessels in that business, MARAD will not issue an approval of the vessel's coastwise endorsement eligibility. Comments should refer to the vessel name, state the commenter's interest in the application, and address the eligibility criteria given in section 388.4 of MARAD's regulations at 46 CFR part 388.

Public Participation

How do I submit comments?

Please submit your comments, including the attachments, following the instructions provided under the above heading entitled **ADDRESSES**. Be advised that it may take a few hours or even days for your comment to be reflected on the docket. In addition, your comments must be written in English. We encourage you to provide concise comments and you may attach additional documents as necessary. There is no limit on the length of the attachments.

Where do I go to read public comments, and find supporting information?

Go to the docket online at *http://www.regulations.gov,* keyword search MARAD–2022–0139 or visit the Docket Management Facility (see **ADDRESSES** for hours of operation). We recommend that you periodically check the Docket for new submissions and supporting material.

Will my comments be made available to the public?

Yes. Be aware that your entire comment, including your personal identifying information, will be made publicly available.

May I submit comments confidentially?

If you wish to submit comments under a claim of confidentiality, you should submit the information you claim to be confidential commercial information by email to *SmallVessels@dot.gov.* Include in the email subject heading ''Contains Confidential Commercial Information'' or ''Contains CCI'' and state in your submission, with specificity, the basis for any such confidential claim highlighting or denoting the CCI portions. If possible, please provide a summary of your submission that can be made available to the public.

In the event MARAD receives a Freedom of Information Act (FOIA) request for the information, procedures described in the Department's FOIA regulation at 49 CFR 7.29 will be followed. Only information that is ultimately determined to be confidential under those procedures will be exempt from disclosure under FOIA.

Privacy Act

Anyone can search the electronic form of all comments received into any of our dockets by the name of the individual submitting the comment (or signing the comment, if submitted on behalf of an association, business, labor union, etc.). For information on DOT's compliance with the Privacy Act, please visit *https://www.transportation.gov/privacy.*

(Authority: 49 CFR 1.93(a), 46 U.S.C. 55103, 46 U.S.C. 12121)

By Order of the Maritime Administrator.

T. Mitchell Hudson, Jr.,

Secretary, Maritime Administration.

[FR Doc. 2022–15696 Filed 7–21–22; 8:45 am]

BILLING CODE 4910–81–P

DEPARTMENT OF TRANSPORTATION

Maritime Administration

[Docket No. MARAD–2022–0136]

Coastwise Endorsement Eligibility Determination for a Foreign-Built Vessel: DISTRACTION (Motor); Invitation for Public Comments

AGENCY: Maritime Administration, DOT.

ACTION: Notice.

SUMMARY: The Secretary of Transportation, as represented by the Maritime Administration (MARAD), is authorized to issue coastwise endorsement eligibility determinations for foreign-built vessels which will carry no more than twelve passengers for hire. A request for such a determination has been received by MARAD. By this notice, MARAD seeks comments from interested parties as to any effect this action may have on U.S. vessel builders or businesses in the U.S. that use U.S.-flag vessels. Information about the requestor's vessel, including a brief description of the proposed service, is listed below.

DATES: Submit comments on or before August 22, 2022.

ADDRESSES: You may submit comments identified by DOT Docket Number MARAD–2022–0136 by any one of the following methods:

• *Federal eRulemaking Portal:* Go to *http://www.regulations.gov.* Search MARAD–2022–0136 and follow the instructions for submitting comments.

• *Mail or Hand Delivery:* Docket Management Facility is in the West Building, Ground Floor of the U.S. Department of Transportation. The Docket Management Facility location address is: U.S. Department of Transportation, MARAD–2022–0136, 1200 New Jersey Avenue SE, West Building, Room W12–140, Washington, DC 20590, between 9 a.m. and 5 p.m., Monday through Friday, except on Federal holidays.

Note: If you mail or hand-deliver your comments, we recommend that you include your name and a mailing address, an email address, or a telephone number in the body of your document so that we can contact you if we have questions regarding your submission.

Instructions: All submissions received must include the agency name and specific docket number. All comments received will be posted without change to the docket at *www.regulations.gov,* including any personal information provided. For detailed instructions on submitting comments, or to submit comments that are confidential in nature, see the section entitled Public Participation.

FOR FURTHER INFORMATION CONTACT: James Mead, U.S. Department of Transportation, Maritime Administration, 1200 New Jersey Avenue SE, Room W23–459, Washington, DC 20590. Telephone 202–366–5723, Email *James.Mead@dot.gov.*

SUPPLEMENTARY INFORMATION: As described in the application, the intended service of the vessel DISTRACTION is:

—*Intended Commercial Use of Vessel:* ''Private vessel charters, passengers only.''

—*Geographic Region Including Base of Operations:* ''Maine, New Hampshire, Massachusetts, Rhode Island, Connecticut, New York (excluding waters in New York harbor), New Jersey, Pennsylvania, Delaware, Maryland, Virginia, North Carolina, South Carolina, Georgia, Florida, California, Oregon, Washington, and Alaska (excluding waters in Southeastern Alaska).'' (Base of Operations: Marina del Rey, CA)

—*Vessel Length and Type:* 52.9′ Motor

The complete application is available for review identified in the DOT docket as MARAD 2022–0136 at *http://www.regulations.gov.* Interested parties may comment on the effect this action may have on U.S. vessel builders or businesses in the U.S. that use U.S.-flag vessels. If MARAD determines, in accordance with 46 U.S.C. 12121 and MARAD's regulations at 46 CFR part 388, that the employment of the vessel in the coastwise trade to carry no more than 12 passengers will have an unduly adverse effect on a U.S.-vessel builder or a business that uses U.S.-flag vessels in that business, MARAD will not issue an approval of the vessel's coastwise endorsement eligibility. Comments should refer to the vessel name, state the commenter's interest in the application, and address the eligibility criteria given in section 388.4 of MARAD's regulations at 46 CFR part 388.

Public Participation

How do I submit comments?

Please submit your comments, including the attachments, following the instructions provided under the above heading entitled **ADDRESSES**. Be advised that it may take a few hours or even days for your comment to be reflected on the docket. In addition, your comments must be written in English. We encourage you to provide concise comments and you may attach additional documents as necessary. There is no limit on the length of the attachments.

Where do I go to read public comments, and find supporting information?

Go to the docket online at *http://www.regulations.gov,* keyword search MARAD–2022–0136 or visit the Docket Management Facility (see **ADDRESSES** for hours of operation). We recommend that you periodically check the Docket for new submissions and supporting material.

Will my comments be made available to the public?

Yes. Be aware that your entire comment, including your personal identifying information, will be made publicly available.

May I submit comments confidentially?

If you wish to submit comments under a claim of confidentiality, you should submit the information you claim to be confidential commercial information by email to *SmallVessels@dot.gov.* Include in the email subject heading ''Contains Confidential Commercial Information'' or ''Contains CCI'' and state in your submission, with specificity, the basis for any such confidential claim highlighting or denoting the CCI portions. If possible, please provide a summary of your submission that can be made available to the public.

In the event MARAD receives a Freedom of Information Act (FOIA) request for the information, procedures described in the Department's FOIA regulation at 49 CFR 7.29 will be followed. Only information that is ultimately determined to be confidential under those procedures will be exempt from disclosure under FOIA.

Privacy Act

Anyone can search the electronic form of all comments received into any of our dockets by the name of the individual submitting the comment (or signing the comment, if submitted on behalf of an association, business, labor union, etc.). For information on DOT's compliance with the Privacy Act, please visit *https://www.transportation.gov/privacy.*

(Authority: 49 CFR 1.93(a), 46 U.S.C. 55103, 46 U.S.C. 12121)

By Order of the Maritime Administrator.

T. Mitchell Hudson, Jr.,

Secretary, Maritime Administration.

[FR Doc. 2022–15686 Filed 7–21–22; 8:45 am]

BILLING CODE 4910–81–P

DEPARTMENT OF TRANSPORTATION

Maritime Administration

[Docket No. MARAD–2022–0142]

Coastwise Endorsement Eligibility Determination for a Foreign-Built Vessel: DOUBLE V (Motor); Invitation for Public Comments

AGENCY: Maritime Administration, DOT.

ACTION: Notice.

SUMMARY: The Secretary of Transportation, as represented by the Maritime Administration (MARAD), is authorized to issue coastwise endorsement eligibility determinations for foreign-built vessels which will carry no more than twelve passengers for hire. A request for such a determination has been received by MARAD. By this notice, MARAD seeks comments from interested parties as to any effect this action may have on U.S. vessel builders or businesses in the U.S. that use U.S.-flag vessels. Information about the requestor's vessel, including a brief description of the proposed service, is listed below.

DATES: Submit comments on or before August 22, 2022.

ADDRESSES: You may submit comments identified by DOT Docket Number MARAD–2022–0142 by any one of the following methods:

• *Federal eRulemaking Portal:* Go to *http://www.regulations.gov.* Search MARAD–2022–0142 and follow the instructions for submitting comments.

• *Mail or Hand Delivery:* Docket Management Facility is in the West Building, Ground Floor of the U.S. Department of Transportation. The Docket Management Facility location address is: U.S. Department of Transportation, MARAD–2022–0142, 1200 New Jersey Avenue SE, West Building, Room W12–140, Washington, DC 20590, between 9 a.m. and 5 p.m., Monday through Friday, except on Federal holidays.

Note: If you mail or hand-deliver your comments, we recommend that you include your name and a mailing address, an email address, or a telephone number in the body of your document so that we can contact you if we have questions regarding your submission.

Instructions: All submissions received must include the agency name and specific docket number. All comments received will be posted without change to the docket at *www.regulations.gov,* including any personal information provided. For detailed instructions on submitting comments, or to submit comments that are confidential in nature, see the section entitled Public Participation.

FOR FURTHER INFORMATION CONTACT: James Mead, U.S. Department of Transportation, Maritime Administration, 1200 New Jersey Avenue SE, Room W23–459, Washington, DC 20590. Telephone 202–366–5723, Email *James.Mead@dot.gov.*

SUPPLEMENTARY INFORMATION: As described in the application, the intended service of the vessel DOUBLE V is:

—*Intended Commercial Use of Vessel:* ''Private vessel charters, passengers only.''

—*Geographic Region Including Base of Operations*: ''Florida.'' (Base of Operations: Miami, FL)

—*Vessel Length and Type:* 44.1′ Motor

The complete application is available for review identified in the DOT docket as MARAD 2022–0142 at *http://www.regulations.gov.* Interested parties may comment on the effect this action may have on U.S. vessel builders or businesses in the U.S. that use U.S.-flag vessels. If MARAD determines, in accordance with 46 U.S.C. 12121 and MARAD's regulations at 46 CFR part 388, that the employment of the vessel in the coastwise trade to carry no more than 12 passengers will have an unduly adverse effect on a U.S.-vessel builder or a business that uses U.S.-flag vessels in that business, MARAD will not issue an approval of the vessel's coastwise endorsement eligibility. Comments should refer to the vessel name, state the commenter's interest in the application, and address the eligibility criteria given in section 388.4 of MARAD's regulations at 46 CFR part 388.

Public Participation

How do I submit comments?

Please submit your comments, including the attachments, following the instructions provided under the above heading entitled **ADDRESSES**. Be advised that it may take a few hours or even days for your comment to be reflected on the docket. In addition, your comments must be written in English. We encourage you to provide concise comments and you may attach additional documents as necessary. There is no limit on the length of the attachments.

Where do I go to read public comments, and find supporting information?

Go to the docket online at *http://www.regulations.gov,* keyword search MARAD–2022–0142 or visit the Docket Management Facility (see **ADDRESSES** for hours of operation). We recommend that you periodically check the Docket for new submissions and supporting material.

Will my comments be made available to the public?

Yes. Be aware that your entire comment, including your personal identifying information, will be made publicly available.

May I submit comments confidentially?

If you wish to submit comments under a claim of confidentiality, you should submit the information you claim to be confidential commercial information by email to *SmallVessels@dot.gov.* Include in the email subject heading ''Contains Confidential Commercial Information'' or ''Contains CCI'' and state in your submission, with specificity, the basis for any such confidential claim highlighting or denoting the CCI portions. If possible, please provide a summary of your submission that can be made available to the public.

In the event MARAD receives a Freedom of Information Act (FOIA) request for the information, procedures described in the Department's FOIA regulation at 49 CFR 7.29 will be followed. Only information that is ultimately determined to be confidential under those procedures will be exempt from disclosure under FOIA.

Privacy Act

Anyone can search the electronic form of all comments received into any of our dockets by the name of the individual submitting the comment (or signing the comment, if submitted on behalf of an association, business, labor union, etc.). For information on DOT's compliance with the Privacy Act, please visit *https://www.transportation.gov/privacy.*

(Authority: 49 CFR 1.93(a), 46 U.S.C. 55103, 46 U.S.C. 12121)

By Order of the Maritime Administrator.

T. Mitchell Hudson, Jr.,

Secretary, Maritime Administration.

[FR Doc. 2022–15687 Filed 7–21–22; 8:45 am]

BILLING CODE 4910–81–P

DEPARTMENT OF TRANSPORTATION

Maritime Administration

[Docket No. MARAD–2022–0137]

Coastwise Endorsement Eligibility Determination for a Foreign-built Vessel: MAXIM (Motor); Invitation for Public Comments

AGENCY: Maritime Administration, DOT.

ACTION: Notice.

SUMMARY: The Secretary of Transportation, as represented by the Maritime Administration (MARAD), is authorized to issue coastwise endorsement eligibility determinations for foreign-built vessels which will carry no more than twelve passengers for hire. A request for such a determination has been received by MARAD. By this notice, MARAD seeks comments from interested parties as to any effect this action may have on U.S. vessel builders or businesses in the U.S. that use U.S.-flag vessels. Information about the requestor's vessel, including a brief description of the proposed service, is listed below.

DATES: Submit comments on or before August 22, 2022.

ADDRESSES: You may submit comments identified by DOT Docket Number MARAD–2022–0137 by any one of the following methods:

• *Federal eRulemaking Portal:* Go to *http://www.regulations.gov.* Search MARAD–2022–0137 and follow the instructions for submitting comments.

• *Mail or Hand Delivery:* Docket Management Facility is in the West Building, Ground Floor of the U.S. Department of Transportation. The Docket Management Facility location address is: U.S. Department of Transportation, MARAD–2022–0137, 1200 New Jersey Avenue SE, West Building, Room W12–140, Washington, DC 20590, between 9 a.m. and 5 p.m., Monday through Friday, except on Federal holidays.

Note: If you mail or hand-deliver your comments, we recommend that you include your name and a mailing address, an email address, or a telephone number in the body of your document so that we can contact you if we have questions regarding your submission.

Instructions: All submissions received must include the agency name and specific docket number. All comments received will be posted without change to the docket at *www.regulations.gov,* including any personal information provided. For detailed instructions on submitting comments, or to submit comments that are confidential in nature, see the section entitled Public Participation.

FOR FURTHER INFORMATION CONTACT: James Mead, U.S. Department of Transportation, Maritime Administration, 1200 New Jersey Avenue SE, Room W23–459, Washington, DC 20590. Telephone 202–366–5723, Email *James.Mead@dot.gov.*

SUPPLEMENTARY INFORMATION: As described in the application, the intended service of the vessel MAXIM is:

—*Intended Commercial Use of Vessel:* ''Charter.''
—*Geographic Region Including Base of Operations:* ''Washington.'' (Base of Operations: Kirkland, WA)
—*Vessel Length and Type:* 54′ Motor

The complete application is available for review identified in the DOT docket as MARAD 2022–0137 at *http://www.regulations.gov.* Interested parties may comment on the effect this action may have on U.S. vessel builders or businesses in the U.S. that use U.S.-flag vessels. If MARAD determines, in accordance with 46 U.S.C. 12121 and MARAD's regulations at 46 CFR part 388, that the employment of the vessel in the coastwise trade to carry no more than 12 passengers will have an unduly adverse effect on a U.S.-vessel builder or a business that uses U.S.-flag vessels in that business, MARAD will not issue an approval of the vessel's coastwise endorsement eligibility. Comments should refer to the vessel name, state the commenter's interest in the application, and address the eligibility criteria given in section 388.4 of MARAD's regulations at 46 CFR part 388.

Public Participation

How do I submit comments?

Please submit your comments, including the attachments, following the instructions provided under the above heading entitled **ADDRESSES**. Be advised that it may take a few hours or even days for your comment to be reflected on the docket. In addition, your comments must be written in English. We encourage you to provide concise comments and you may attach additional documents as necessary. There is no limit on the length of the attachments.

Where do I go to read public comments, and find supporting information?

Go to the docket online at *http://www.regulations.gov,* keyword search MARAD–2022–0137 or visit the Docket Management Facility (see **ADDRESSES** for hours of operation). We recommend that you periodically check the Docket for new submissions and supporting material.

Will my comments be made available to the public?

Yes. Be aware that your entire comment, including your personal identifying information, will be made publicly available.

May I submit comments confidentially?

If you wish to submit comments under a claim of confidentiality, you should submit the information you claim to be confidential commercial information by email to *SmallVessels@dot.gov.* Include in the email subject heading ''Contains Confidential Commercial Information'' or ''Contains CCI'' and state in your submission, with specificity, the basis for any such confidential claim highlighting or denoting the CCI portions. If possible, please provide a summary of your submission that can be made available to the public.

In the event MARAD receives a Freedom of Information Act (FOIA) request for the information, procedures described in the Department's FOIA regulation at 49 CFR 7.29 will be followed. Only information that is ultimately determined to be confidential under those procedures will be exempt from disclosure under FOIA.

Privacy Act

Anyone can search the electronic form of all comments received into any of our dockets by the name of the individual submitting the comment (or signing the comment, if submitted on behalf of an association, business, labor union, etc.). For information on DOT's compliance with the Privacy Act, please visit *https://www.transportation.gov/privacy.*

(Authority: 49 CFR 1.93(a), 46 U.S.C. 55103, 46 U.S.C. 12121)

By Order of the Maritime Administrator.

T. Mitchell Hudson, Jr.,

Secretary, Maritime Administration.

[FR Doc. 2022–15691 Filed 7–21–22; 8:45 am]

BILLING CODE 4910–81–P

DEPARTMENT OF TRANSPORTATION

Maritime Administration

[Docket No. MARAD–2022–0133]

Coastwise Endorsement Eligibility Determination for a Foreign-Built Vessel: TANTARA (Sail); Invitation for Public Comments

AGENCY: Maritime Administration, DOT.

ACTION: Notice.

SUMMARY: The Secretary of Transportation, as represented by the Maritime Administration (MARAD), is authorized to issue coastwise endorsement eligibility determinations for foreign-built vessels which will carry no more than twelve passengers for hire. A request for such a determination has been received by MARAD. By this notice, MARAD seeks comments from interested parties as to any effect this action may have on U.S. vessel builders or businesses in the U.S. that use U.S.-flag vessels. Information about the requestor's vessel, including a brief description of the proposed service, is listed below.

DATES: Submit comments on or before August 22, 2022.

ADDRESSES: You may submit comments identified by DOT Docket Number MARAD–2022–0133 by any one of the following methods:

- *Federal eRulemaking Portal:* Go to *http://www.regulations.gov.* Search MARAD–2022–0133 and follow the instructions for submitting comments.
- *Mail or Hand Delivery:* Docket Management Facility is in the West Building, Ground Floor of the U.S. Department of Transportation. The Docket Management Facility location address is: U.S. Department of Transportation, MARAD–2022–0133, 1200 New Jersey Avenue SE, West Building, Room W12–140, Washington, DC 20590, between 9 a.m. and 5 p.m., Monday through Friday, except on Federal holidays.

Note: If you mail or hand-deliver your comments, we recommend that you include your name and a mailing address, an email address, or a telephone number in the body of your document so that we can contact you if we have questions regarding your submission.

Instructions: All submissions received must include the agency name and

specific docket number. All comments received will be posted without change to the docket at *www.regulations.gov,* including any personal information provided. For detailed instructions on submitting comments, or to submit comments that are confidential in nature, see the section entitled Public Participation.

FOR FURTHER INFORMATION CONTACT: James Mead, U.S. Department of Transportation, Maritime Administration, 1200 New Jersey Avenue SE, Room W23–459, Washington, DC 20590. Telephone 202–366–5723, Email *James.Mead@dot.gov.*

SUPPLEMENTARY INFORMATION: As described in the application, the intended service of the vessel TANTARA is:

—*Intended Commercial Use of Vessel:* ''Daily sails in New York harbor for up to 6 passengers.''
—*Geographic Region Including Base of Operations:* ''New York, New Jersey.'' (Base of Operations: New York, NY)
—*Vessel Length and Type:* 44′ Sail

The complete application is available for review identified in the DOT docket as MARAD 2022–0133 at *http://www.regulations.gov.* Interested parties may comment on the effect this action may have on U.S. vessel builders or businesses in the U.S. that use U.S.-flag vessels. If MARAD determines, in accordance with 46 U.S.C. 12121 and MARAD's regulations at 46 CFR part 388, that the employment of the vessel in the coastwise trade to carry no more than 12 passengers will have an unduly adverse effect on a U.S.-vessel builder or a business that uses U.S.-flag vessels in that business, MARAD will not issue an approval of the vessel's coastwise endorsement eligibility. Comments should refer to the vessel name, state the commenter's interest in the application, and address the eligibility criteria given in section 388.4 of MARAD's regulations at 46 CFR part 388.

Public Participation

How do I submit comments?

Please submit your comments, including the attachments, following the instructions provided under the above heading entitled **ADDRESSES**. Be advised that it may take a few hours or even days for your comment to be reflected on the docket. In addition, your comments must be written in English. We encourage you to provide concise comments and you may attach additional documents as necessary. There is no limit on the length of the attachments.

Where do I go to read public comments, and find supporting information?

Go to the docket online at *http://www.regulations.gov,* keyword search MARAD–2022–0133 or visit the Docket Management Facility (see **ADDRESSES** for hours of operation). We recommend that you periodically check the Docket for new submissions and supporting material.

Will my comments be made available to the public?

Yes. Be aware that your entire comment, including your personal identifying information, will be made publicly available.

May I submit comments confidentially?

If you wish to submit comments under a claim of confidentiality, you should submit the information you claim to be confidential commercial information by email to *SmallVessels@dot.gov.* Include in the email subject heading ''Contains Confidential Commercial Information'' or ''Contains CCI'' and state in your submission, with specificity, the basis for any such confidential claim highlighting or denoting the CCI portions. If possible, please provide a summary of your submission that can be made available to the public.

In the event MARAD receives a Freedom of Information Act (FOIA) request for the information, procedures described in the Department's FOIA regulation at 49 CFR 7.29 will be followed. Only information that is ultimately determined to be confidential under those procedures will be exempt from disclosure under FOIA.

Privacy Act

Anyone can search the electronic form of all comments received into any of our dockets by the name of the individual submitting the comment (or signing the comment, if submitted on behalf of an association, business, labor union, etc.). For information on DOT's compliance with the Privacy Act, please visit *https://www.transportation.gov/privacy.*

(Authority: 49 CFR 1.93(a), 46 U.S.C. 55103, 46 U.S.C. 12121)

By Order of the Maritime Administrator.

T. Mitchell Hudson, Jr.,

Secretary, Maritime Administration.

[FR Doc. 2022–15695 Filed 7–21–22; 8:45 am]

BILLING CODE 4910–81–P

DEPARTMENT OF TRANSPORTATION

Maritime Administration

[Docket No. MARAD–2022–0132]

Coastwise Endorsement Eligibility Determination for a Foreign-Built Vessel: EROS (Motor); Invitation for Public Comments

AGENCY: Maritime Administration, DOT.

ACTION: Notice.

SUMMARY: The Secretary of Transportation, as represented by the Maritime Administration (MARAD), is authorized to issue coastwise endorsement eligibility determinations for foreign-built vessels which will carry no more than twelve passengers for hire. A request for such a determination has been received by MARAD. By this notice, MARAD seeks comments from interested parties as to any effect this action may have on U.S. vessel builders or businesses in the U.S. that use U.S.-flag vessels. Information about the requestor's vessel, including a brief description of the proposed service, is listed below.

DATES: Submit comments on or before August 22, 2022.

ADDRESSES: You may submit comments identified by DOT Docket Number MARAD–2022–0132 by any one of the following methods:

- *Federal eRulemaking Portal:* Go to *http://www.regulations.gov.* Search MARAD–2022–0132 and follow the instructions for submitting comments.
- *Mail or Hand Delivery:* Docket Management Facility is in the West Building, Ground Floor of the U.S. Department of Transportation. The Docket Management Facility location address is: U.S. Department of Transportation, MARAD–2022–0132, 1200 New Jersey Avenue SE, West Building, Room W12–140, Washington, DC 20590, between 9 a.m. and 5 p.m., Monday through Friday, except on Federal holidays.

Note: If you mail or hand-deliver your comments, we recommend that you include your name and a mailing address, an email address, or a telephone number in the body of your document so that we can contact you if we have questions regarding your submission.

Instructions: All submissions received must include the agency name and specific docket number. All comments received will be posted without change to the docket at *www.regulations.gov,* including any personal information provided. For detailed instructions on submitting comments, or to submit comments that are confidential in

nature, see the section entitled Public Participation.

FOR FURTHER INFORMATION CONTACT: James Mead, U.S. Department of Transportation, Maritime Administration, 1200 New Jersey Avenue SE, Room W23–459, Washington, DC 20590. Telephone 202–366–5723, Email *James.Mead@dot.gov.*

SUPPLEMENTARY INFORMATION: As described in the application, the intended service of the vessel EROS is:

—*Intended Commercial Use of Vessel:* ''Charter.''

—*Geographic Region Including Base of Operations:* ''Texas, Florida, Massachusetts.'' (Base of Operations: Kemah, TX)

—*Vessel Length and Type:* 52.6′ Motor

The complete application is available for review identified in the DOT docket as MARAD 2022–0132 at *http://www.regulations.gov.* Interested parties may comment on the effect this action may have on U.S. vessel builders or businesses in the U.S. that use U.S.-flag vessels. If MARAD determines, in accordance with 46 U.S.C. 12121 and MARAD's regulations at 46 CFR part 388, that the employment of the vessel in the coastwise trade to carry no more than 12 passengers will have an unduly adverse effect on a U.S.-vessel builder or a business that uses U.S.-flag vessels in that business, MARAD will not issue an approval of the vessel's coastwise endorsement eligibility. Comments should refer to the vessel name, state the commenter's interest in the application, and address the eligibility criteria given in section 388.4 of MARAD's regulations at 46 CFR part 388.

Public Participation

How do I submit comments?

Please submit your comments, including the attachments, following the instructions provided under the above heading entitled **ADDRESSES**. Be advised that it may take a few hours or even days for your comment to be reflected on the docket. In addition, your comments must be written in English. We encourage you to provide concise comments and you may attach additional documents as necessary. There is no limit on the length of the attachments.

Where do I go to read public comments, and find supporting information?

Go to the docket online at *http://www.regulations.gov,* keyword search MARAD–2022–0132 or visit the Docket Management Facility (see **ADDRESSES** for hours of operation). We recommend that you periodically check the Docket for new submissions and supporting material.

Will my comments be made available to the public?

Yes. Be aware that your entire comment, including your personal identifying information, will be made publicly available.

May I submit comments confidentially?

If you wish to submit comments under a claim of confidentiality, you should submit the information you claim to be confidential commercial information by email to *SmallVessels@dot.gov.* Include in the email subject heading ''Contains Confidential Commercial Information'' or ''Contains CCI'' and state in your submission, with specificity, the basis for any such confidential claim highlighting or denoting the CCI portions. If possible, please provide a summary of your submission that can be made available to the public.

In the event MARAD receives a Freedom of Information Act (FOIA) request for the information, procedures described in the Department's FOIA regulation at 49 CFR 7.29 will be followed. Only information that is ultimately determined to be confidential under those procedures will be exempt from disclosure under FOIA.

Privacy Act

Anyone can search the electronic form of all comments received into any of our dockets by the name of the individual submitting the comment (or signing the comment, if submitted on behalf of an association, business, labor union, etc.). For information on DOT's compliance with the Privacy Act, please visit *https://www.transportation.gov/privacy.*

(Authority: 49 CFR 1.93(a), 46 U.S.C. 55103, 46 U.S.C. 12121)

By Order of the Maritime Administrator.

T. Mitchell Hudson, Jr.,

Secretary, Maritime Administration.

[FR Doc. 2022–15688 Filed 7–21–22; 8:45 am]

BILLING CODE 4910–81–P

DEPARTMENT OF THE TREASURY

Office of Foreign Assets Control

Notice of OFAC Sanctions Actions

AGENCY: Office of Foreign Assets Control, Treasury.

ACTION: Notice.

SUMMARY: The U.S. Department of the Treasury's Office of Foreign Assets Control (OFAC) is publishing the names of one or more persons that have been placed on OFAC's List of Specially Designated Nationals and Blocked Persons (SDN List) based on OFAC's determination that one or more applicable legal criteria were satisfied. All property and interests in property subject to U.S. jurisdiction of these persons are blocked, and U.S. persons are generally prohibited from engaging in transactions with them.

DATES: See Supplementary Information section for effective date(s).

FOR FURTHER INFORMATION CONTACT: OFAC: Andrea Gacki, Director, tel.: 202–622–2490; Associate Director for Global Targeting, tel.: 202–622–2420; Assistant Director for Licensing, tel.: 202–622–2480; Assistant Director for Regulatory Affairs, tel.: 202–622–4855; or the Assistant Director for Sanctions Compliance & Evaluation, tel.: 202–622–2490.

SUPPLEMENTARY INFORMATION:

Electronic Availability

The SDN List and additional information concerning OFAC sanctions programs are available on OFAC's website (*https://www.treasury.gov/ofac*).

Notice of OFAC Actions

On July 6, 2022, OFAC determined that the property and interests in property subject to U.S. jurisdiction of the following persons are blocked under the relevant sanctions authorities listed below.

BILLING CODE 4810–AL–P

Individuals

1. RAJABIESLAMI, Morteza (a.k.a. AL-ZAHIR, Rajabi Ali; a.k.a. ESLAMI, Mortaza Rajabi; a.k.a. RAJABI, Morteza), #2007, 20th Floor, Grand Hyatt Residence, Qudmetha St., Dubai 7167, United Arab Emirates; DOB 05 Jul 1969; POB Tehran, Iran; nationality Iran; citizen Saint Kitts and Nevis; Additional Sanctions Information - Subject to Secondary Sanctions; Gender Male; Personal ID Card 166730510001 (United Kingdom) (individual) [IRAN-EO13846] (Linked To: NAFTIRAN INTERTRADE CO. (NICO) LIMITED).

   Designated pursuant to section 1(a)(ii) of E.O. 13846 for, on or after November 5, 2018, having materially assisted, sponsored, or provided financial, material, or technological support for, or goods or services to or in support of, NAFTIRAN INTERTRADE CO. (NICO LIMITED).

2. SANCHULI, Mahdieh (a.k.a. SANCHOULI, Mahdieh; a.k.a. SANCHOULI, Mahdieh Hossien Ali), Dubai, United Arab Emirates; DOB 06 Sep 1977; POB Zahedan, Iran; nationality Iran; citizen Iran; Additional Sanctions Information - Subject to Secondary Sanctions; Gender Female; Passport I95763162 (Iran) expires 06 Jul 2019; alt. Passport T96326639 (Iran) (individual) [IRAN-EO13846] (Linked To: NAFTIRAN INTERTRADE CO. (NICO) LIMITED).

   Designated pursuant to section 1(a)(ii) of E.O. 13846 for, on or after November 5, 2018, having materially assisted, sponsored, or provided financial, material, or technological support for, or goods or services to or in support of, NAFTIRAN INTERTRADE CO. (NICO LIMITED).

Entities

1. ALI ALMUTAWA PETROLEUM AND PETROCHEMICAL TRADING L.L.C. (Arabic: علي المطوع تجارة البترول والبتروكيماويات ذ.م.م), Office No. M02-M06, City Gate Bldg, Bin Ham Properties, Port Saeed, Dubai, Deira, United Arab Emirates; Additional Sanctions Information - Subject to Secondary Sanctions; License 880522 (United Arab Emirates); Economic Register Number (CBLS) 11502399 (United Arab Emirates) [IRAN-EO13846] (Linked To: TRILIANCE PETROCHEMICAL CO. LTD.).

   Designated pursuant to section 1(a)(iii)(B) of E.O. 13846 for, on or after November 5, 2018, having materially assisted, sponsored, or provided financial, material, or technological support for, or goods or services to or in support of, TRILIANCE PETROCHEMICAL CO. LTD.

2. EDGAR COMMERCIAL SOLUTIONS FZE (Arabic: ايدجار كوميرشال سولوشنز م م ح), P2-ELOB Office No. E-08F-26, Hamriyah Free Zone, United Arab Emirates; Additional Sanctions Information - Subject to Secondary Sanctions; License 18865 (United Arab

Emirates); Economic Register Number (CBLS) 11582964 (United Arab Emirates) [IRAN-EO13846] (Linked To: PERSIAN GULF PETROCHEMICAL INDUSTRY COMMERCIAL CO.).

Designated pursuant to section 1(a)(iii)(B) of E.O. 13846 for, on or after November 5, 2018, having materially assisted, sponsored, or provided financial, material, or technological support for, or goods or services to or in support of, PERSIAN GULF PETROCHEMICAL INDUSTRY COMMERCIAL CO.

3. EMERALD GLOBAL FZE (a.k.a. "EMERALD FZE" (Arabic: "امیراد م م ح")), P3-E-LOB, Hamryah Free Zone, Sharjah, United Arab Emirates; E-LOB Office No E-68F-15, United Arab Emirates; Additional Sanctions Information - Subject to Secondary Sanctions; Commercial Registry Number 11579352 (United Arab Emirates); Registration Number 13108 (United Arab Emirates) [IRAN-EO13846] (Linked To: NAFTIRAN INTERTRADE CO. (NICO) LIMITED).

   Designated pursuant to section 1(a)(ii) of E.O. 13846 for, on or after November 5, 2018, having materially assisted, sponsored, or provided financial, material, or technological support for, or goods or services to or in support of, NAFTIRAN INTERTRADE CO. (NICO LIMITED).

4. JAM PETROCHEMICAL COMPANY (Arabic: شرکت پتروشیمی جم سهامی عام) (a.k.a. JAM PETROCHEMICAL COMPLEX), Pars Special Economic Energy Zone, Jam Petrochemical Co, Assaluyeh, Boushehr Province 75118-11368, Iran; No. 27 Nezami St., Tavanir Ave, Tehran 1434853114, Iran; Website https://www.jpcomplex.ir; Additional Sanctions Information - Subject to Secondary Sanctions; National ID No. 10100777300 (Iran); Registration Number 32285 (Iran) [IRAN-EO13846] (Linked To: IRAN PETROCHEMICAL COMMERCIAL COMPANY).

   Designated pursuant to section 1(a)(iii)(B) of E.O. 13846 for, on or after November 5, 2018, having materially assisted, sponsored, or provided financial, material, or technological support for, or goods or services to or in support of, IRAN PETROCHEMICAL COMMERCIAL COMPANY.

5. LUSTRO INDUSTRY LIMITED, Hong Kong, China; Additional Sanctions Information - Subject to Secondary Sanctions; C.R. No. 2929380 (Hong Kong) [IRAN-EO13846] (Linked To: PERSIAN GULF PETROCHEMICAL INDUSTRY COMMERCIAL CO.).

   Designated pursuant to section 1(a)(iii)(B) of E.O. 13846 for, on or after November 5, 2018, having materially assisted, sponsored, or provided financial, material, or technological support for, or goods or services to or in support of, PERSIAN GULF PETROCHEMICAL INDUSTRY COMMERCIAL CO.

6. OLIGEI INTERNATIONAL TRADING CO., LIMITED, Flat H29, 1/F Phase 2 Kwai Shing Ind Bldg, No. 42-46, Tai Lin Pai Rd., Kwai Chung NT, Hong Kong, China; Additional Sanctions Information - Subject to Secondary Sanctions; C.R. No. 2953973 (Hong Kong) [IRAN-EO13846] (Linked To: PERSIAN GULF PETROCHEMICAL INDUSTRY COMMERCIAL CO.).

Designated pursuant to section 1(a)(iii)(B) of E.O. 13846 for, on or after November 5, 2018, having materially assisted, sponsored, or provided financial, material, or technological support for, or goods or services to or in support of, PERSIAN GULF PETROCHEMICAL INDUSTRY COMMERCIAL CO.

7. PETROGAT FZE (Arabic: بيترو غات م.م.ح), Ras Al Khaimah, United Arab Emirates; Additional Sanctions Information - Subject to Secondary Sanctions; License 5017709 (United Arab Emirates) expires 01 Mar 2020 [IRAN-EO13846] (Linked To: NAFTIRAN INTERTRADE CO. (NICO) LIMITED).

   Designated pursuant to section 1(a)(ii) of E.O. 13846 for, on or after November 5, 2018, having materially assisted, sponsored, or provided financial, material, or technological support for, or goods or services to or in support of, NAFTIRAN INTERTRADE CO. (NICO LIMITED).

8. PETROKICK LLC (Arabic: بتروكيك ذ م م), Sharjah Media City, Al Messanad, Al Bataeh, Sharjah, United Arab Emirates; Additional Sanctions Information - Subject to Secondary Sanctions; License 1905792.01 (United Arab Emirates); Economic Register Number (CBLS) 11600198 (United Arab Emirates) [IRAN-EO13846] (Linked To: BEHRAN OIL CO.).

   Designated pursuant to section 1(a)(iii)(B) of E.O. 13846 for, on or after November 5, 2018, having materially assisted, sponsored, or provided financial, material, or technological support for, or goods or services to or in support of, BEHRAN OIL CO.

Dated: July 6, 2022.

Andrea M. Gacki,

Director, Office of Foreign Assets Control, U.S. Department of the Treasury.

[FR Doc. 2022–15666 Filed 7–21–22; 8:45 am]

BILLING CODE 4810–AL–C

DEPARTMENT OF THE TREASURY

Internal Revenue Service

Proposed Collection; Comment Request for Application for Approval of Prototype or Employer Sponsored Individual Retirement Account

AGENCY: Internal Revenue Service (IRS), Treasury.

ACTION: Notice and request for comments.

SUMMARY: The Internal Revenue Service, as part of its continuing effort to reduce paperwork and respondent burden, invites the general public and other Federal agencies to take this opportunity to comment on continuing information collections, as required by the Paperwork Reduction Act of 1995. The IRS is soliciting comments concerning the application for approval of prototype or employer sponsored individual retirement account.

DATES: Written comments should be received on or before September 20, 2022 to be assured of consideration.

ADDRESSES: Direct all written comments to Andres Garcia, Internal Revenue Service, Room 6526, 1111 Constitution Avenue NW, Washington, DC 20224, or by email to *omb.unit@irs.gov.* Include OMB control number 1545–0390 or Application for Approval of Prototype or Employer Sponsored Individual Retirement Account, in the subject line of the message.

FOR FURTHER INFORMATION CONTACT: Requests for additional information or copies of the form should be directed to Kerry Dennis at (202) 317–5751, or at Internal Revenue Service, Room 6526, 1111 Constitution Avenue NW, Washington DC 20224, or through the internet, at *Kerry.L.Dennis@irs.gov.*

SUPPLEMENTARY INFORMATION:

Title: Application for Approval of Prototype or Employer Sponsored Individual Retirement Account.

OMB Number: 1545–0390.

Form Number: 5306.

Abstract: This application is used by employers who want to establish an individual retirement account trust to be used by their employees. The application is also used by banks and insurance companies that want to establish approved prototype individual retirement accounts or annuities. The data collected is used to determine if the individual retirement account trust or annuity contract meets the requirements of Code section 408(a), 408(b), or 408(c) so that the IRS may issue an approval letter.

Current Actions: There is no change to the paperwork burden previously approved by OMB.

Type of Review: Extension of a currently approved collection.

Affected Public: Businesses and other for-profit organizations.

Estimated Number of Respondents: 600.

Estimated Time per Respondent: 13 hours, 44 minutes.

Estimated Total Annual Burden Hours: 8,244 hours.

The following paragraph applies to all the collections of information covered by this notice.

An agency may not conduct or sponsor, and a person is not required to respond to, a collection of information unless the collection of information displays a valid OMB control number. Books or records relating to a collection of information must be retained if their contents may become material in the administration of any internal revenue law. Generally, tax returns and tax

return information are confidential, as required by 26 U.S.C. 6103.

Request for Comments: Comments submitted in response to this notice will be summarized and/or included in the request for OMB approval. All comments will become a matter of public record. Comments are invited on: (a) whether the collection of information is necessary for the proper performance of the functions of the agency, including whether the information shall have practical utility; (b) the accuracy of the agency's estimate of the burden of the collection of information; (c) ways to enhance the quality, utility, and clarity of the information to be collected; (d) ways to minimize the burden of the collection of information on respondents, including through the use of automated collection techniques or other forms of information technology; and (e) estimates of capital or start-up costs and costs of operation, maintenance, and purchase of services to provide information.

Approved: July 18, 2022.

Kerry L. Dennis,

Tax Analyst.

[FR Doc. 2022–15625 Filed 7–21–22; 8:45 am]

BILLING CODE 4830–01–P

DEPARTMENT OF THE TREASURY

Agency Information Collection Activities; Submission for OMB Review; Comment Request; Multiple Alcohol and Tobacco Tax and Trade Bureau Information Collection Request

AGENCY: Departmental Offices, Department of the Treasury.

ACTION: Notice.

SUMMARY: The Department of the Treasury will submit the following information collection requests to the Office of Management and Budget (OMB) for review and clearance in accordance with the Paperwork Reduction Act of 1995, on or after the date of publication of this notice. The public is invited to submit comments on these requests.

DATES: Comments should be received on or before August 22, 2022 to be assured of consideration.

ADDRESSES: Written comments and recommendations for the proposed information collection should be sent within 30 days of publication of this notice to *www.reginfo.gov/public/do/PRAMain.* Find this particular information collection by selecting ''Currently under 30-day Review—Open for Public Comments'' or by using the search function.

FOR FURTHER INFORMATION CONTACT: Copies of the submissions may be obtained from Melody Braswell by emailing *PRA@treasury.gov,* calling (202) 622–1035, or viewing the entire information collection request at *www.reginfo.gov.*

SUPPLEMENTARY INFORMATION:

1. Title: Letterhead Applications and Notices Relating to Wine.

OMB Number: 1513–0057.

Form Number: TTB REC 5120/2.

Abstract: The Internal Revenue Code (IRC) authorizes the Secretary of the Treasury (the Secretary) to issue regulations regarding certain aspects of wine production and treatment, and it imposes standards for natural and agricultural wines, the cellar treatment of natural wine, and the labeling of wines. See 26 U.S.C. chapter 51. Under those authorities, the TTB regulations in *27 CFR part 24* require wine premises proprietors to submit letterhead applications or notices to TTB before or when undertaking certain operations. TTB requires such applications or notices when proprietors propose to use alternate compliance methods or when they propose or undertake certain operations, particularly those that affect the kind, tax rate, or volume of wine produced or removed. TTB uses the collected information to ensure that the proposed alternative method or wine operations comply with relevant laws and regulations.

Type of Review: Extension of a currently approved collection.

Affected Public: Businesses or other for-profits.

Estimated Number of Respondents: 2,000.

Estimated Time Burden: 30 minutes.

Estimated Total Burden: 1,000 hours.

2. Title: Airlines Withdrawing Stock from Customs Custody.

OMB Number: 1513–0074.

Form Number: TTB REC 5620/2.

Abstract: While domestic and imported distilled spirits and wine are usually subject to Federal excise tax, the IRC allows the removal of such products without payment of tax in some circumstances, for example, for use on certain aircraft. See *26 U.S.C. 5214* and *5362* Airlines also may withdraw such products from customs custody without payment of tax for use as supplies on aircraft engaged in foreign flights. See *19 U.S.C. 1309.* Under those authorities, the TTB regulations in *27 CFR part 28* require airlines to account for distilled spirits and wine withdrawn from their stocks held in customs custody at airports for use as supplies on aircraft engaged in foreign flights. The collected information is necessary to ensure that the tax provisions of the IRC are appropriately applied as it allows TTB to account for withdrawals of untaxed distilled spirits and wine.

Type of Review: Extension of a currently approved collection.

Affected Public: Businesses and other for-profits.

Estimated Number of Respondents: 25.

Estimated Responses per Respondent: 1 (one).

Estimated Number of Responses: 25.

Estimated Time Per-Response Burden: 100 hours.

Total Burden: 2,500 hours.

3. Title: Applications for Extension of Time for Payment of Tax; Applications for Installment Agreement.

OMB Number: 1513–0093.

Form Number: TTB F 5600.31 and TTB F 5600.38.

Abstract: The IRC authorizes the Secretary to allow installment payments of taxes due under the IRC if such payments will facilitate full or partial payment, and it allows the Secretary to grant taxpayers up to 6 months of additional time to pay such taxes. See *26 U.S.C. 6159* and *6161.* Under those IRC authorities, TTB has issued application forms TTB F 5600.31 for installment payment requests and TTB F 5600.38 for time extension requests for use by the Federal taxpayers. Using the relevant form and supporting documentation, a taxpayer identifies themselves, the specific excise tax and amount in question, their current financial situation, and the reasons why the requested installment payment plan or time extension is necessary. The collected information is necessary to ensure that the tax relief provisions of the IRC are properly applied.

Type of Review: Extension of a currently approved collection.

Affected Public: Businesses or other for-profits.

Estimated Number of Respondents: 200.

Estimated Time Per-Response Burden: 1.5 hours.

Estimated Total Burden: 300 hours.

4. Title: Information Collected to Support Transfer of Wine Tax Credits.

OMB Number: 1513–0104.

Form Number: TTB REC 5120/11.

Abstract: Under the IRC, certain wine producers are eligible for tax credits, based on the amount of wine produced and its alcohol content, which they may take to reduce the Federal excise tax they pay on wines (including hard ciders) removed from their premises during a calendar year. In addition, producers can transfer their tax credit to other bonded wineries and bonded

warehouses (''transferees'') that store their wine and ship it on their instructions. See at *26 U.S.C. 5041(c).* Under the TTB regulations in *27 CFR part 24,* and specific to this collection, a transferee uses information provided by the wine producer to take the appropriate tax credit on behalf of the producer, and the producer uses the information to monitor its own tax payments to ensure it does not exceed the authorized credits. During field audits, TTB uses the collected information to verify excise tax computations, and to ensure that wines claimed for this credit were lawfully produced, stored, shipped, and transferred. As such, the collected information is necessary to ensure the tax provisions of the IRC are appropriately applied.

Type of Review: Extension of a currently approved collection.

Affected Public: Businesses or other for-profits.

Estimated Number of Respondents: 3,000.

Estimated Time Per-Response Burden: 1 hour.

Estimated Total Burden: 30,000.

Authority: 44 U.S.C. 3501 *et seq.*

Melody Braswell,

Treasury PRA Clearance Officer.

[FR Doc. 2022–15756 Filed 7–21–22; 8:45 am]

BILLING CODE 4810–31–P

DEPARTMENT OF VETERANS AFFAIRS

[OMB Control No. 2900–0043]

Agency Information Collection Activity Under OMB Review: Application Request To Add and/or Remove Dependents

AGENCY: Veterans Benefits Administration, Department of Veterans Affairs.

ACTION: Notice.

SUMMARY: In compliance with the Paperwork Reduction Act (PRA) of 1995, this notice announces that the Veterans Benefits Administration (VBA), Department of Veterans Affairs, will submit the collection of information abstracted below to the Office of Management and Budget (OMB) for review and comment. The PRA submission describes the nature of the information collection and its expected cost and burden and it includes the actual data collection instrument.

DATES: Written comments and recommendations for the proposed information collection should be sent within 30 days of publication of this notice to *www.reginfo.gov/public/do/PRAMain.* Find this particular information collection by selecting ''Currently under 30-day Review—Open for Public Comments'' or by using the search function. Refer to ''OMB Control No. 2900–0043.

FOR FURTHER INFORMATION CONTACT: Maribel Aponte, Office of Enterprise and Integration, Data Governance Analytics (008), 1717 H Street NW, Washington, DC 20006, (202) 266–4688 or email *maribel.aponte@va.gov.* Please refer to ''OMB Control No. 2900–0043'' in any correspondence.

SUPPLEMENTARY INFORMATION:

Authority: 38 U.S.C. 1115, 38 CFR 3.205 and 3.209.

Title: Application Request to Add and/or Remove Dependents (VA Form 21–686c).

OMB Control Number: 2900–0043.

Type of Review: Reinstatement of a previously approved collection.

Abstract: VA Form 21–686c is used to obtain current information about marital status and dependent child(ren). The information is needed to determine the correct rate of payment for veterans and beneficiaries who may be entitled to an additional allowance for dependents or to remove dependents. Without this information, entitlement to these benefits could not be determined.

No changes have been made to this form. The respondent burden has increased due to the estimated number of receivables averaged over the past year.

An agency may not conduct or sponsor, and a person is not required to respond to a collection of information unless it displays a currently valid OMB control number. The **Federal Register** Notice with a 60-day comment period soliciting comments on this collection of information was published at 87 FR 97 on May 19, 2022, pages 30560 and 30561.

Affected Public: Individuals or Households.

Estimated Annual Burden: 184,581.

Estimated Average Burden per Respondent: 30 minutes.

Frequency of Response: One time.

Estimated Number of Respondents: 369,162.

By direction of the Secretary:

Dorothy Glasgow,

VA PRA Clearance Officer, (Alt.), Office of Enterprise and Integration, Data Governance Analytics, Department of Veterans Affairs.

[FR Doc. 2022–15667 Filed 7–21–22; 8:45 am]

BILLING CODE 8320–01–P

FEDERAL REGISTER

Vol. 87 Friday,

No. 140 July 22, 2022

Part II

Department of Energy

10 CFR Part 429

Energy Conservation Program for Appliance Standards: Certification for Ceiling Fan Light Kits, General Service Incandescent Lamps, Incandescent Reflector Lamps, Ceiling Fans, Consumer Furnaces and Boilers, Consumer Water Heaters, Dishwashers, and Commercial Clothes Washers, Battery Chargers, and Dedicated-Purpose Pool Pumps; Final Rule

DEPARTMENT OF ENERGY

10 CFR Part 429

[EERE–2012–BT–STD–0045]

RIN 1904–AE90

Energy Conservation Program for Appliance Standards: Certification for Ceiling Fan Light Kits, General Service Incandescent Lamps, Incandescent Reflector Lamps, Ceiling Fans, Consumer Furnaces and Boilers, Consumer Water Heaters, Dishwashers, and Commercial Clothes Washers, Battery Chargers, and Dedicated-Purpose Pool Pumps

AGENCY: Office of Energy Efficiency and Renewable Energy, Department of Energy.

ACTION: Final rule.

SUMMARY: The U.S. Department of Energy (''DOE'' or the ''Department'') is publishing a final rule to amend the certification provisions for ceiling fan light kits, general service incandescent lamps, incandescent reflector lamps, ceiling fans, consumer furnaces and boilers, consumer water heaters, dishwashers, commercial clothes washers, battery chargers, and dedicated-purpose pool pumps. DOE is amending the certification and reporting provisions for these products and equipment to ensure reporting is consistent with currently applicable energy conservation standards and to ensure that DOE has the information necessary to determine the appropriate classification of products for the application of standards.

DATES: The effective date of this rule is August 22, 2022. The final rule changes will be mandatory for the annual certification reports submitted for products and equipment beginning February 17, 2023. The incorporation of certain publications in this rule was approved by the Director of the Federal Register on December 17, 2012, and September 6, 2017.

ADDRESSES: The docket, which includes **Federal Register** notices, comments, and other supporting documents/materials, is available for review at *www.regulations.gov.* All documents in the docket are listed in the *www.regulations.gov* index. However, some documents listed in the index, such as those containing information that is exempt from public disclosure, may not be publicly available.

A link to the docket web page can be found at *www.regulations.gov/docket/EERE-2012-BT-STD-0045.* The docket web page contains instructions on how to access all documents, including public comments, in the docket.

For further information on how to review the docket contact the Appliance and Equipment Standards Program staff at (202) 287–1445 or by email: *ApplianceStandardsQuestions@ee.doe.gov.*

FOR FURTHER INFORMATION CONTACT:

Mr. Lucas Adin, U.S. Department of Energy, Office of Energy Efficiency and Renewable Energy, Building Technologies Office, EE–2J, 1000 Independence Avenue SW, Washington, DC 20585–0121. Telephone: (202) 287–5904. Email: *ApplianceStandardsQuestions@ee.doe.gov.*

Ms. Amelia Whiting, U.S. Department of Energy, Office of the General Counsel, GC–33, 1000 Independence Avenue SW, Washington, DC 20585–0121. Telephone: (202) 586–2588. Email: *Amelia.Whiting@hq.doe.gov.*

SUPPLEMENTARY INFORMATION:

Table of Contents

I. Authority and Background
A. Authority
B. Background
1. Ceiling Fan Light Kits
2. GSILs and IRLs
3. Ceiling Fans
4. Consumer Furnaces and Boilers
5. Grid-Enabled Consumer Water Heaters
6. Dishwashers
7. Commercial Clothes Washers
8. Battery Chargers
9. Dedicated-Purpose Pool Pumps
II. Synopsis of the Final Rule
III. Discussion
A. Ceiling Fan Light Kits
1. Scope of Applicability
2. Reporting
3. Reporting Costs and Impacts
B. GSILs and IRLs
1. Scope of Applicability
2. Reporting
3. Reporting Costs and Impacts
C. Ceiling Fans
1. Scope of Applicability
2. Reporting
3. Reporting Costs and Impacts
D. Consumer Furnaces and Boilers
1. Scope of Applicability
2. Reporting
3. Reporting Costs and Impacts
E. Grid-Enabled Consumer Water Heaters
1. Scope of Applicability
2. Reporting
3. Reporting Costs and Impacts
F. Dishwashers
1. Scope of Applicability
2. Reporting
3. Reporting Costs and Impacts
G. Commercial Clothes Washers
1. Scope of Applicability
2. Reporting
3. Reporting Costs and Impacts
H. Battery Chargers
1. Scope of Applicability
2. Reporting
3. Reporting Costs and Impacts
I. Dedicated-Purpose Pool Pumps
1. Scope of Applicability
2. Reporting
3. Reporting Costs and Impacts
J. Revised Certification Templates
K. Effective and Compliance Dates
IV. Procedural Issues and Regulatory Review
A. Review Under Executive Orders 12866 and 13563
B. Review Under the Regulatory Flexibility Act
C. Review Under the Paperwork Reduction Act of 1995
D. Review Under the National Environmental Policy Act of 1969
E. Review Under Executive Order 13132
F. Review Under Executive Order 12988
G. Review Under the Unfunded Mandates Reform Act of 1995
H. Review Under the Treasury and General Government Appropriations Act, 1999
I. Review Under Executive Order 12630
J. Review Under Treasury and General Government Appropriations Act, 2001
K. Review Under Executive Order 13211
L. Review Under Section 32 of the Federal Energy Administration Act of 1974
M. Materials Incorporated by Reference
N. Congressional Notification
V. Approval of the Office of the Secretary

I. Authority and Background

A. Authority

The Energy Policy and Conservation Act, as amended (''EPCA''),[1] authorizes DOE to regulate the energy efficiency of a number of consumer products and certain industrial equipment. (42 U.S.C. 6291–6317, as codified) Title III, Part B [2] of EPCA, Public Law 94–163, established the Energy Conservation Program for Consumer Products Other Than Automobiles, which sets forth a variety of provisions designed to improve energy efficiency. Title III, Part C [3] of EPCA, added by Public Law 95–619, Title IV, section 441(a), established the Energy Conservation Program for Certain Industrial Equipment. These products and equipment include ceiling fan light kits (''CFLKs''), general service incandescent lamps (''GSILs''), incandescent reflector lamps (''IRLs''), ceiling fans, consumer furnaces and boilers, consumer water heaters, dishwashers, commercial clothes washers (''CCWs''), battery chargers, and dedicated-purpose pool pumps (''DPPPs''), the subjects of this final rule. (42 U.S.C. 6292(a)(4–6) and (14); 42 U.S.C. 6295(u) and (ff); 42 U.S.C. 6311(1)(A) and (H))

[1] All references to EPCA in this document refer to the statute as amended through the Energy Act of 2020, Public Law 116–260 (Dec. 27, 2020), which reflect the last statutory amendments that impact Parts A and A–1 of EPCA.

[2] For editorial reasons, upon codification in the U.S. Code, Part B was redesignated Part A.

[3] For editorial reasons, upon codification in the U.S. Code, Part C was re-designated at Part A–1.

The energy conservation program under EPCA consists essentially of four parts: (1) testing, (2) labeling, (3) the establishment of Federal energy conservation standards, and (4) certification and enforcement procedures. Relevant provisions of EPCA specifically include definitions (42 U.S.C. 6291; 42 U.S.C. 6311), test procedures (42 U.S.C. 6293; 42 U.S.C. 6314), labeling provisions (42 U.S.C. 6294; 42 U.S.C. 6315), energy conservation standards (42 U.S.C. 6295; 42 U.S.C. 6313), and the authority to require information and reports from manufacturers (42 U.S.C. 6296; 42 U.S.C. 6316).

The Federal testing requirements consist of test procedures that manufacturers of covered products must use as the basis for (1) certifying to DOE that their products comply with the applicable energy conservation standards adopted under EPCA (42 U.S.C. 6295(s); 42 U.S.C. 6316(a)), and (2) making other representations about the efficiency of those products (42 U.S.C. 6293(c); 42 U.S.C. 6314(d)). Similarly, DOE must use these test procedures to determine whether the products comply with any relevant standards promulgated under EPCA. (42 U.S.C. 6295(s); 42 U.S.C. 6316(a))

EPCA authorizes DOE to enforce compliance with the energy and water conservation standards established for covered products and equipment. (42 U.S.C. 6299–6305; 42 U.S.C. 6316(a)–(b)) DOE has promulgated enforcement regulations that include reporting requirements for covered products and equipment including CFLKs, GSILs, IRLs, ceiling fans, consumer furnaces and boilers, consumer water heaters, dishwashers, CCWs, battery chargers, and DPPPs. See title 10 of the Code of Federal Regulations (''CFR'') part 429. The certification regulations ensure that DOE has the information it needs to assess whether regulated products and equipment sold in the United States comply with the statutory and regulatory requirements applicable to each covered product and equipment type.

B. Background

DOE's certification regulations are a mechanism that DOE uses to help ensure compliance with its regulations by collecting information about the energy and water use characteristics of covered products and covered equipment sold in the United States. Manufacturers of all covered products and covered equipment must submit a certification report before a basic model is distributed in commerce and annually thereafter. If a basic model is modified in a manner that increases the basic model's energy or water consumption or decreases its efficiency such that the certified rating is no longer supported by test data, the basic model must be re-rated and certified as a new basic model. Additionally, manufacturers must report when production of a basic model has ceased and is no longer offered for sale as part of the next annual certification report following such cessation. DOE requires the manufacturer of any covered product or covered equipment to establish, maintain, and retain the records of certification reports, of the underlying test data for all certification testing, and of any other testing conducted to satisfy the requirements of 10 CFR part 429, 10 CFR part 430, and/or 10 CFR part 431 until two years after notifying DOE that a model has been discontinued. 10 CFR 429.71. Certification reports provide DOE and consumers with comprehensive, up-to-date efficiency information and support effective enforcement.

To ensure that all covered products and covered equipment distributed in the United States comply with DOE's energy and water conservation standards and reporting requirements, DOE has promulgated certification, compliance, and enforcement regulations in 10 CFR part 429. On March 7, 2011, the Department published in the **Federal Register** a final rule regarding certification, compliance, and enforcement for consumer products and commercial and industrial equipment, which revised, consolidated, and streamlined the Department's existing certification, compliance, and enforcement regulations for certain consumer products and commercial and industrial equipment covered under EPCA. 76 FR 12422.[4] Since that time, DOE has also completed multiple rulemakings regarding certification, compliance, and enforcement for specific covered products or equipment. See, for example, the May 5, 2014, final rule regarding certification of commercial and industrial heating, ventilating, air conditioning (''HVAC''), refrigeration, and water heating equipment. 79 FR 25486.

On August 6, 2021, DOE published a notice of proposed rulemaking (''NOPR'') that proposed to amend the certification and reporting requirements for the products and equipment that are the subjects of this final rule to ensure that DOE has the information necessary to determine the appropriate classification of products for the application of standards. 86 FR 43120 (''August 2021 Certification NOPR''). DOE received comments in response to the August 2021 Certification NOPR from the interested parties listed in Table II.1.

TABLE II.1—LIST OF COMMENTERS WITH WRITTEN SUBMISSIONS IN RESPONSE TO THE AUGUST 2021 CERTIFICATION NOPR

Commenter(s)	Reference in this final rule	Document No. in docket	Commenter type
The Air-Conditioning, Heating, and Refrigeration Institute	AHRI	166	Trade Association.
Air Movement and Control Association International, Inc	AMCA	159	Trade Association.
American Lighting Association	ALA	160	Trade Association.
Appliance Standards Awareness Project, American Council for an Energy-Efficient Economy, Earthjustice, and Northwest Energy Efficiency Alliance.	Joint Commenters	165	Efficiency Organizations.
Association of Home Appliance Manufacturers	AHAM	167	Trade Association.
Bradford White Corporation	Bradford White	163	Manufacturer.
National Electrical Manufacturers Association	NEMA	164	Trade Association.
NSF International	NSF	168	Trade Association.
TIC Council Americas	TIC	161	Trade Association.

[4] DOE subsequently published two correction documents on May 2, 2011 (to correct a drafting error and erroneous internal cross references) and on August 2, 2011 (to correct presentation of a formula). 76 FR 24762; 76 FR 46202, respectively.

DOE received an additional comment submission unrelated to the substance of the August 2021 Certification NOPR that is not addressed in this final rule.[5]

A parenthetical reference at the end of a comment quotation or paraphrase provides the location of the item in the public record.[6]

The following sections provides the relevant background for the products and equipment that are subject to this final rule.

1. Ceiling Fan Light Kits

CFLKs are ''covered products'' for which DOE is authorized to establish and amend energy conservation standards and test procedures. (42 U.S.C. 6291(50), 42 U.S.C. 6293(b)(16)(A)(ii), 42 U.S.C. 6295(ff)(2)–(5)) DOE's energy conservation standards for CFLKs are currently prescribed at 10 CFR 430.32(s). Test procedures for CFLKs are currently prescribed at 10 CFR 430.23; 10 CFR part 430, subpart B, appendix V, ''Uniform Test Method for Measuring the Energy Consumption of Ceiling Fan Light Kits With Pin-Based Sockets for Fluorescent Lamps'' (''appendix V''); and 10 CFR part 430, subpart B, appendix V1, ''Uniform Test Method for Measuring the Energy Consumption of Ceiling Fan Light Kits Packaged With Other Fluorescent Lamps (not Compact Fluorescent Lamps or General Service Fluorescent Lamps), Packaged With Other SSL Lamps (not Integrated LED Lamps), or With Integrated SSL Circuitry'' (''appendix V1''). The sampling requirements for determining represented values based on the results of testing of CFLKs are found at 10 CFR 429.33(a). The information that must be included in certification reports and submitted to DOE for CFLKs is found at 10 CFR 429.33(b).

CFLKs manufactured on or after January 1, 2007, and prior to January 21, 2020, must be packaged with lamps to fill all sockets, with additional standards applicable based on the type of lamp sockets. 10 CFR 430.32(s)(3)–(5). Lamps packaged with CFLKs with medium screw base sockets must meet efficacy standards, while medium screw base compact fluorescent lamps (''CFLs'') must additionally meet standards for lumen maintenance, rapid cycle stress, and lifetime. 10 CFR 432.32(s)(3). CFLKs with pin-based sockets for fluorescent lamps must use an electronic ballast and the lamp-ballast platform must meet efficacy standards. 10 CFR 432.32(s)(4). CFLKs with other than medium screw base or pin-based sockets must not be capable of operating with lamps that total more than 190 watts. 10 CFR 432.32(s)(5). The standards at 10 CFR 430.32(s)(3)–(5) are referred to collectively in this document as the ''January 1, 2007 standards.''

On December 24, 2015, DOE published a final rule (''December 2015 CFLK TP Final Rule'') making two key updates to its CFLK test procedure. 80 FR 80209. First, DOE updated the CFLK test procedure to require that representations of efficacy, including certifications of compliance with CFLK standards, be made according to the corresponding DOE lamp test procedures, where they exist (*e.g.,* for a CFLK with medium screw base sockets that is packaged with CFLs, the CFLK test procedure references the DOE test procedure for CFLs at 10 CFR 430.23(y)). 80 FR 80209, 80211. Second, DOE updated the CFLK test procedure by establishing in a separate appendix, *i.e.,* appendix V1, the test procedure for CFLKs packaged with inseparable light sources that require luminaire efficacy testing (*e.g.,* CFLKs with integrated solid-state lighting (''SSL'') circuitry) and for CFLKs packaged with lamps for which DOE test procedures did not exist. *Id.* at 80 FR 80212. With these changes, the December 2015 CFLK TP Final Rule aligned requirements for measuring efficacy of lamps and/or light sources in CFLKs with current DOE lamp test procedures.

DOE published a final rule on January 6, 2016, amending energy conservation standards (''ECS'') for CFLKs (''January 2016 CFLK ECS Final Rule''). 81 FR 580. In that final rule, DOE established amended standards based on the efficacy of the lamps (with additional requirements for medium base CFLs and pin-based fluorescent lamps) packaged with the CFLK, except where the lamps are not designed to be consumer replaceable from the CFLK (*i.e.,* integrated SSLs), in which case luminaire efficacy is used. 81 FR 580, 632. These amended standards apply to CFLKs manufactured on or after January 21, 2020,[7] and are referred to collectively in this document as the ''January 21, 2020 standards.'' *See* 10 CFR 430.32(s)(6). Representations regarding CFLKs subject to the January 21, 2020 standards must be based on the relevant test procedures as amended by the December 2015 CFLK TP Final Rule, including appendix V1 for CFLKs packaged with other fluorescent lamps (not compact fluorescent lamps or general service fluorescent lamps), packaged with other SSL products (not integrated LED lamps), or with integrated SSL circuitry. 10 CFR 430.23(x)(2).

Neither the December 2015 CFLK TP Final Rule nor the January 2016 CFLK ECS Final Rule amended the reporting requirements for CFLKs to reflect the updated metrics from the test procedure and amended standards. The reporting requirements at 10 CFR 429.33 continue to require manufacturers to report based on the January 1, 2007 standards, including information that is no longer relevant. This inconsistency between the reporting requirements and the January 21, 2020 standards may lead to confusion regarding which standards are applicable as well as the reporting of unnecessary information. In the August 2021 Certification NOPR, DOE proposed to update the reporting requirements to address the January 21, 2020, standards and remove the reporting requirements for the January 1, 2007 standards. 86 FR 43120, 43122.

2. GSILs and IRLs

GSILs and IRLs are ''covered products'' for which DOE is authorized to establish and amend energy conservation standards and test procedures. (42 U.S.C. 6292(a)(14)) DOE's existing test procedures for general service fluorescent lamps (''GSFLs''), IRLs, and GSILs appear at title 10 CFR part 430, subpart B, appendix R, ''Uniform Test Method for Measuring Average Lamp Efficacy (''LE''), Color Rendering Index (''CRI''), and Correlated Color Temperature (''CCT'') of Electric Lamps'' (''appendix R'').

DOE test procedures for GSFLs, IRLs, and GSILs are codified in appendix R and the associated sampling and reporting requirements are codified in 10 CFR 429.27. DOE standards for GSFLs, IRLs, and GSILs are codified respectively at 10 CFR 430.32(n)(1), (2), (4), (6), and (7) and (x).

[5] See comment from Lisa Halverson, EERE–2012–BT–STD–0045–162.

[6] The parenthetical reference provides a reference for information located in the docket of DOE's rulemaking to amend certification and reporting requirements for the subject products and equipment. (Docket No. EERE–2012–BT–STD–0045, which is maintained at *www.regulations.gov*). The references are arranged as follows: (commenter name, comment docket ID number, page of that document).

[7] After DOE's promulgation of final rules establishing energy conservation standards for CFLKs and ceiling fans, Congress enacted S. 2030, the ''Ceiling Fan Energy Conservation Harmonization Act'' (''the Act''), which was signed into law as Public Law 115–161 on April 3, 2018. The Act amended the compliance date for the CFLK standards to establish a single compliance date for the energy conservation standards for both CFLKs and ceiling fans. On May 16, 2018, DOE published a final rule that amended the compliance date for CFLKs in the relevant sections of the CFR by replacing ''January 7, 2019'' with ''January 21, 2020.'' 83 FR 22587.

On July 6, 2009, DOE published a final rule amending the test procedures for GSFLs, IRLs, and GSILs. 74 FR 31829. These amendments consisted largely of: (1) referencing the most current versions of several lighting industry test standards incorporated by reference; (2) adopting certain technical changes and clarifications; and (3) expanding the test procedures to accommodate new classes of lamps to which coverage was extended by the Energy Independence and Security Act of 2007 (Pub. L. 110–140). 74 FR 31829, 31832–31833. The final rule also addressed the then recently established statutory requirement to expand test procedures to incorporate a measure of standby mode and off mode energy consumption and determined that, because these modes of energy consumption were not applicable to the lamps, an expansion of the test procedures was not necessary. *Id.* at 74 FR 31833. Shortly thereafter, DOE again amended the test procedures to adopt reference ballast settings necessary for the additional GSFLs for which DOE was establishing standards. 74 FR 34080, 34096 (July 14, 2009).

DOE most recently amended the test procedures for GSFLs and GSILs in a final rule published on January 27, 2012. 77 FR 4203. DOE updated several references to the industry test standards referenced in DOE's test procedures and established a lamp lifetime test method for GSILs. 77 FR 4203, 4205–4208. In that final rule, DOE determined amendments to the existing test procedure for IRLs were not necessary. *Id.* at 77 FR 4208.

On June 3, 2021, DOE published a NOPR that proposed amendments to the test procedures for GSFL, IRLs, and GSILs. 86 FR 29888 (''June 2021 Lighting TP NOPR''). In the June 2021 Lighting TP NOPR, DOE proposed to update to the latest versions of the referenced industry test standards; clarify definitions, test conditions and methods; clarify test frequency and inclusion of cathode power in measurements for GSFLs; provide a test method for measuring the CRI of GSILs and IRLs and for measuring lifetime of IRLs; allow manufacturers to make voluntary (optional) representations of GSFLs at high frequency settings; and align sampling and certification reporting requirements with proposed test procedure terminology and with the Federal Trade Commission's labeling program. 86 FR 29888, 29891–29892.

On May 9, 2022, DOE published a final rule amending the definitions of GSIL and general service lamp (''GSL'') by bringing certain categories of lamps that had been excluded by statute from the definition of GSIL within the definitions of GSIL and GSL. The rule also expanded the definition of GSL to include IRLs. 87 FR 27461 (''May 2022 Definition Final Rule''). On May 9, 2022, DOE also published a final rule implementing a statutory backstop requirement applicable to GSLs, which prohibits the sale of any GSL that is less than 45 lumens per watt (lm/W). 87 FR 27439.

In the August 2021 Certification NOPR, DOE proposed to revise the reporting requirements to reflect the current energy conservation standards for GSILs and IRLs and include other characteristics in the certification report needed to determine the applicable product classes. 86 FR 43120, 43123.

3. Ceiling Fans

Ceiling fans are ''covered products'' for which DOE is authorized to establish and amend energy conservation standards and test procedures. (42 U.S.C. 6291(49), 42 U.S.C. 6293(b)(16)(A)(i) and (B), 42 U.S.C. 6295(ff)(1) and (6)(C)) DOE's existing test procedure for ceiling fans appears at 10 CFR 430.23 and appendix U of 10 CFR part 430 subpart B, ''Uniform Test Method for Measuring the Energy Consumption of Ceiling Fans'' (''appendix U''). Sampling and reporting requirements for ceiling fans are set forth at 10 CFR 429.32. DOE's existing energy conservation standards for ceiling fans are located in 10 CFR 430.32(s).

On July 25, 2016, DOE published a final rule that amended the test procedures for ceiling fans at appendix U. 81 FR 48620 (''July 2016 Ceiling Fan TP Final Rule''). On January 19, 2017, DOE established energy conservation standards for ceiling fans, expressed as the minimum allowable efficiency in terms of cubic feet per minute per watt (''CFM/W''), as a function of ceiling fan diameter in inches. These standards are applicable to all ceiling fans manufactured in, or imported into, the United States on and after January 21, 2020. 82 FR 6826, 6827 (''January 2017 Ceiling Fan ECS Final Rule'').

On December 27, 2020, the Energy Act of 2020 (Pub. L. 116–260) was signed into law, which, among other things, amended performance standards for large-diameter ceiling fans (''LDCFs'').[8] (42 U.S.C. 6295(ff)(6)(C)(i)(I), as codified) Specifically, section 1008 of the Energy Act of 2020 amended section 325(ff)(6) of EPCA to specify that LDCFs manufactured on or after January 21, 2020, are not required to meet minimum ceiling fan efficiency requirements in terms of the ratio of the total airflow to the total power consumption (*i.e.,* CFM/W) as established in the January 2017 Ceiling Fan ECS Final Rule. (42 U.S.C. 6295(ff)(6)(C)(i)(I), as codified) Instead, LDCFs are required to meet specified minimum efficiency requirements based on the Ceiling Fan Energy Index (''CFEI'') metric, with one standard based on operation of the fan at high speed and a second standard based on operation of the fan at 40 percent speed or the nearest speed that is not less than 40 percent speed. (42 U.S.C. 6295(ff)(6)(C)(i)(II), as codified)

On May 27, 2021, DOE published a final rule to amend the current regulations for LDCFs, corresponding to the provisions in the Energy Act of 2020. 86 FR 28469 (''May 2021 Technical Amendment''). The May 2021 Technical Amendment also implemented conforming amendments to the ceiling fan test procedure to ensure consistency with the Energy Act of 2020.

In the August 2021 Certification NOPR, DOE proposed to amend the ceiling fan reporting requirements to reflect the amended energy conservation standards adopted in the January 2017 Ceiling Fan ECS final rule and to amend the updated performance standards for LDCFs as established in the Energy Act of 2020. 86 FR 43120, 43123.

4. Consumer Furnaces and Boilers

Consumer furnaces and boilers are included in the list of ''covered products'' for which DOE is authorized to establish and amend energy conservation standards and test procedures.[9] (42 U.S.C. 6292(a)(5)) DOE's energy conservation standards for consumer furnaces and boilers are currently prescribed at 10 CFR 430.32(e). Test procedures for consumer furnaces and boilers are currently specified in 10 CFR part 430, subpart B, appendix N, ''Uniform Test Method for Measuring the Energy Consumption of Furnaces and Boilers'' (''appendix N''). Reporting requirements for consumer furnaces and boilers are set forth in 10 CFR 429.18.

The DOE test procedure for consumer furnaces and boilers at appendix N is used to determine the annual fuel utilization efficiency (''AFUE''), which, for gas-fired and oil-fired furnaces and

[8] A ''large-diameter ceiling fan'' is a ceiling fan that is greater than seven feet in diameter. 10 CFR part 430, subpart B, appendix U, section 1.11.

[9] The list of covered products includes ''furnaces;'' however, EPCA defines a ''furnace,'' in relevant part, as ''an electric central furnace, electric boiler, forced-air central furnace, gravity central furnace, or low-pressure steam or hot water boiler.'' (42 U.S.C. 6291(23)(C))

boilers accounts for fossil fuel consumption in active mode but does not include active mode electrical energy consumption. For gas-fired and oil-fired furnaces and boilers, AFUE accounts for fossil fuel consumption in standby mode and off mode, but AFUE does not account for standby mode and off mode electrical consumption. For electric furnaces and boilers, AFUE accounts for electrical energy consumption in active mode but does not account for standby mode and off mode electrical consumption. Appendix N includes separate provisions to determine the electrical energy consumption in standby mode (''$P_{W,SB}$'') and off mode (''$P_{W,OFF}$'') in watts for gas-fired, oil-fired, and electric furnaces and boilers.

On December 19, 2007, the Energy Independence and Security Act of 2007 (''EISA 2007''), Public Law 110–140, was signed into law. EISA 2007 amended EPCA so as to revise the AFUE requirements and establish design requirements for most consumer boiler product classes, and required compliance with the amended standards beginning on September 1, 2012. (42 U.S.C. 6295(f)(3)) For gas-fired hot water boilers, oil-fired hot water boilers, and electric hot water boilers, EISA 2007 requires that residential boilers have an automatic means for adjusting water temperature.[10] EISA 2007 also disallowed the use of constant-burning pilot lights in gas-fired hot water boilers and gas-fired steam boilers. EISA 2007 provided an exception for boilers that operate without any need for electricity or any electric connection, electric gauges, electric pumps, electric wires, or electric devices; those boilers were not required to meet the requirements outlined in EISA 2007 for other consumer boilers that require an electrical connection. (42 U.S.C. 6295(f)(3)(A)–(C)) The complete energy conservation standards and design requirements applicable to consumer furnaces and boilers, including those enacted in EISA 2007 and separately by DOE through final rules, are located at 10 CFR 430.32(e)(2)(ii)–(v). DOE published a final rule technical amendment in the **Federal Register** on July 28, 2008 (''July 2008 Technical Amendment''), to codify the energy conservation standard levels, design requirements, and compliance dates for residential boilers outlined in EISA 2007. 73 FR 43611.

On October 20, 2010, DOE published a final rule in the **Federal Register** amending its test procedure for consumer furnaces and boilers to establish a method for measuring the electrical energy use in standby mode and off mode for gas-fired and oil-fired boilers in satisfaction of 42 U.S.C. 6295(gg)(2)(A), which requires that test procedures for all covered products account for standby mode and off mode energy consumption. 75 FR 64621. DOE most recently updated its test procedure for consumer furnaces and boilers in a final rule published in the **Federal Register** on January 15, 2016 (''January 2016 Furnaces and Boilers TP Final Rule''). 81 FR 2628. The January 2016 Furnaces and Boilers TP Final Rule amended the existing DOE test procedure for consumer furnaces and boilers through a number of modifications designed to improve the consistency and accuracy of test results generated using the DOE test procedure and to reduce test burden. 81 FR 2628, 2629–2630.

On June 27, 2011, DOE published a direct final rule (''DFR'') in the **Federal Register** revising the energy conservation standards for consumer furnaces (as well as consumer central air conditioners and heat pumps) (''June 2011 Multi-Product ECS DFR''). 76 FR 37408. The June 2011 Multi-Product ECS DFR amended the existing energy conservation standards for non-weatherized gas furnaces, mobile home gas furnaces, and non-weatherized oil furnaces, and amended the compliance date (but left the existing standards in place) for weatherized gas furnaces. The June 2011 Multi-Product ECS DFR also established electrical standby mode and off mode standards for non-weatherized gas furnaces, mobile home gas furnaces, non-weatherized oil furnaces, mobile home oil furnaces, and electric furnaces. DOE confirmed the standards and compliance dates promulgated in the June 2011 Multi-Product ECS DFR in a notice of effective date and compliance dates published in the **Federal Register** on October 31, 2011. 76 FR 67037.[11]

DOE completed the most recent rulemaking cycle to amend the standards for consumer boilers by publishing a final rule in the **Federal Register** on January 15, 2016 (''January 2016 Boilers ECS Final Rule), as required under 42 U.S.C. 6295(f)(4)(C). 81 FR 2320. The January 2016 Boilers ECS Final Rule adopted new standby mode and off mode standards for consumer boilers in terms of $P_{W,SB}$ and $P_{W,OFF}$ in addition to amended AFUE energy conservation standards. Compliance with the new and amended standards for consumer boilers was required beginning January 15, 2021. 81 FR 2320, 2321.

In the August 2021 Certification NOPR, DOE proposed to require certification and reporting of standby mode and off mode energy consumption for certain product classes, consistent with the energy conservation standards for standby mode and off mode energy consumption adopted in the June 2011 Multi-Product ECS DFR and the January 2016 Boilers ECS Final Rule. 86 FR 43120, 43124. DOE also proposed to require certification of the type of ignition system for all gas-fired consumer boilers consistent with the prescriptive design requirement set forth in EISA 2007 and subsequently codified by DOE in the July 2008 Technical Amendment, which applies to all gas-fired consumer boilers. *Id.*

5. Grid-Enabled Consumer Water Heaters

Consumer water heaters are included in the list of ''covered products'' for which DOE is authorized to establish and amend energy conservation standards and test procedures. (42 U.S.C. 6292(a)(4)) DOE's energy conservation standards and test procedures for consumer water heaters are currently prescribed at 10 CFR 430.32(d) and 10 CFR part 430, subpart B, appendix E, respectively.

The Energy Efficiency Improvement Act of 2015 (''EEIA 2015''), Public Law 114–11, was enacted on April 30, 2015. EEIA 2015 amended EPCA, in relevant part, by adding definitions for ''grid-enabled water heater'' and ''activation lock'' at 42 U.S.C. 6295(e)(6)(A). These products are intended for use as part of an electric thermal storage or demand response program. Among the criteria

[10] The automatic means for adjusting water temperature must ensure that an incremental change in the inferred heat load produces a corresponding incremental change in the temperature of the water supplied by the boiler.

[11] Following DOE's adoption of the June 2011 Multi-Product ECS DFR, the American Public Gas Association (''APGA'') filed a petition for review with the United States Court of Appeals for the District of Columbia Circuit (''D.C. Circuit'') to invalidate the DOE rule as it pertained to non-weatherized natural gas furnaces and mobile home gas furnaces. Petition for Review, *American Public Gas Association, et al.* v. *Department of Energy, et al.,* No. 11–1485 (D.C. Cir. filed Dec. 23, 2011). On April 24, 2014, the D.C. Circuit granted a motion that approved a settlement agreement that was reached between DOE, APGA, and the various intervenors in the case, in which DOE agreed to a remand of the non-weatherized gas furnace and mobile home gas furnace portions of the June 2011 Multi-Product ECS DFR in order to conduct further notice-and-comment rulemaking. Accordingly, the D.C. Circuit's order vacated the June 2011 Multi-Product ECS DFR in part (*i.e.,* those portions relating to non-weatherized gas furnaces and mobile home gas furnaces) and remanded to the agency for further rulemaking. The energy conservation standards in the June 2011 Multi-Product ECS DFR for the other consumer furnace product classes (as well as central air conditioners and heat pumps) were left in place.

that define a ''grid-enabled water heater'' is an energy-related performance standard that is either an energy factor (''EF'') specified by a formula set forth in the statute, or an equivalent alternative standard that DOE may prescribe. (42 U.S.C. 6295(e)(6)(A)(ii)(III)(aa) and (bb)) In addition, the EEIA 2015 amendments to EPCA also directed DOE to require reporting on shipments and activations of grid-enabled water heaters and to establish procedures, if appropriate, to prevent product diversion for non-program purposes, and to publish related results. (42 U.S.C. 6295(e)(6)(C)–(D)) EEIA 2015 also required DOE to treat shipment data reported by manufacturers as confidential business information. (42 U.S.C. 6295(e)(6)(C)(iii)) On August 11, 2015, DOE published a final rule in the **Federal Register** (''August 2015 Water Heater ECS Final Rule'') that added definitions for ''grid-enabled water heater'' and ''activation lock'' to 10 CFR 430.2 and energy conservation standards for grid-enabled water heaters to 10 CFR 430.32(d). 80 FR 48004, 48009–48010. The August 2015 Water Heater ECS Final Rule did not establish provisions to require the reporting of shipments by manufacturers.

In the August 2021 Certification NOPR, DOE proposed to require each manufacturer to report annual shipments of their grid-enabled water heaters and to treat the annual shipments of grid-enabled water heaters as confidential business information. 86 FR 43120, 43125.

6. Dishwashers

Dishwashers are included in the list of ''covered products'' for which DOE is authorized to establish and amend test procedures and energy conservation standards. (42 U.S.C. 6292(a)(6)) DOE's test procedures for dishwashers are currently prescribed at 10 CFR 430.23(c) and appendix C1 to subpart B of 10 CFR part 430 (''appendix C1''). DOE's energy conservation standards for dishwashers are currently prescribed at 10 CFR 430.32(f).

DOE most recently amended its dishwasher test procedures in a final rule published October 31, 2012, which established appendix C1. 77 FR 65942, 65947. Appendix C1 is currently required to demonstrate compliance with the energy conservation standards prescribed at 10 CFR 430.32(f). The current version of the DOE test procedure includes provisions for determining estimated annual energy use and per-cycle water consumption, among other metrics. 10 CFR 430.23(c).

In the August 2021 Certification NOPR, DOE proposed adding a certification reporting requirement to ensure that any assessment or enforcement testing pursuant to 10 CFR 429.104 and 10 CFR 429.110, respectively, would be performed using the same detergent used by the manufacturer for certifying compliance with the energy conservation standards. 86 FR 43120, 43125.

7. Commercial Clothes Washers

CCWs are included in the list of ''covered equipment'' for which DOE is authorized to establish and amend energy conservation standards and test procedures. (42 U.S.C. 6311(1)(H)) EPCA requires the test procedures for CCWs to be the same as those established for consumer (residential) clothes washers (''RCWs''). (42 U.S.C. 6314(a)(8)) DOE's test procedures for CCWs are currently prescribed at 10 CFR 431.154 and reference DOE's test procedure for RCWs currently prescribed at appendix J2 to subpart B of 10 CFR part 430 (''appendix J2'').[12] DOE's energy conservation standards for CCWs are prescribed at 10 CFR 431.156(b).

DOE amended its CCW test procedures in a final rule published December 3, 2014. 79 FR 71624 (''December 2014 CCW TP Final Rule''). The December 2014 CCW TP Final Rule amended 10 CFR 431.152 to provide definitions for integrated water factor (''IWF'') and modified energy factor value calculated using appendix J2 (''MEF_{J2}'')—the metrics on which the current energy conservation standards are based—among other minor changes.

DOE further amended its test procedures for both RCWs and CCWs in a final rule published June 1, 2022 (''June 2022 RCW/CCW TP Final Rule''). 87 FR 33316. The June 2022 RCW/CCW TP Final Rule amended appendix J2 to further specify test conditions, instrument specifications, and test settings; address large clothes container capacities; add product-specific enforcement provisions; delete obsolete provisions; and consolidate all test cloth-related provisions and codify additional test cloth material verification procedures used by industry. 87 FR 33316, 33319. The June 2022 RCW/CCW TP Final Rule also established a new test procedure at appendix J to subpart B of 10 CFR part 430 (''appendix J''), which includes changes to the test cycles and load sizes required for testing as well as updates to certain test conditions and usage factors, among other changes. *Id.* The June 2022 RCW/CCW TP Final Rule also establishes new energy and water performance metrics, to be measured using the new appendix J, which are based on clothing load size rather than clothes container capacity: active-mode energy efficiency ratio (''AEER''), energy efficiency ratio (''EER''), and water efficiency ratio (''WER''). *Id.* The new test procedure will be used for the evaluation and issuance of updated efficiency standards for both RCWs and CCWs, as well as to determine compliance with the updated standards, should such standards be established.

In a final rule published on December 15, 2014, DOE amended the energy conservation standards and water standards for CCWs. 79 FR 74492 (''December 2014 CCW ECS Final Rule''). Compliance with the standards established in the December 2014 CCW ECS Final Rule was required beginning January 1, 2018. 79 FR 74492, 74493.

In the August 2021 Certification NOPR, DOE proposed to require reporting model characteristics used for determining applicable standards and for conducting product-specific enforcement provisions for clothes washers (which includes CCWs), and to specify rounding instructions for each newly reported value. 86 FR 43120, 43125.

8. Battery Chargers

Battery chargers are ''covered products'' for which DOE is authorized to establish and amend energy conservation standards and test procedures. (42 U.S.C. 6295(u)) DOE's energy conservation standards for battery chargers are currently prescribed at 10 CFR 430.32(z). The test procedures for battery chargers are currently prescribed at 10 CFR part 430, subpart B, appendix Y, ''Uniform Test Method for Measuring the Energy Consumption of Battery Chargers'' (''appendix Y''). The sampling and reporting requirements for battery chargers are set forth in 10 CFR 429.39.

On May 20, 2016, DOE published a final rule that established the test procedure for battery chargers at appendix Y. 81 FR 31827. In that final rule, DOE updated the battery selection criteria for multi-voltage, multi-capacity battery chargers; harmonized the instrumentation resolution and uncertainty requirements with the second edition of the International

[12] The test procedures for CCWs prescribed at 10 CFR 431.154 also reference appendix J1 to subpart B of 10 CFR part 430 (''appendix J1''). For CCWs, appendix J1 is required to demonstrate compliance with energy conservation standards applicable to CCWs manufactured before January 1, 2018. Any representations of compliance with the standards applicable to CCWs manufactured on or after January 1, 2018 must be based upon results generated using appendix J2.

Electrotechnical Commission (''IEC''') 62301 standard for measuring standby power; defined and excluded back-up battery chargers from the testing requirements; outlined provisions for conditioning lead acid batteries; specified sampling and certification requirements; and corrected typographical errors in the current test procedure. 81 FR 31827, 31828–31829.

On June 13, 2016, DOE established the current energy conservation standards for battery chargers, expressed as the maximum allowable unit energy consumption (''kWh/yr'') as a function of battery energy and voltage. 81 FR 38266.

Consistent with these prior regulatory amendments affecting battery chargers, DOE proposed to establish an annual filing date by which manufacturers would be required to submit the required certification information to DOE in the August 2021 Certification NOPR. 86 FR 43120, 43125–43126.

9. Dedicated-Purpose Pool Pumps

DPPPs are a subset of pumps, which are included in the list of ''covered equipment'' for which DOE is authorized to establish and amend energy conservation standards and test procedures. (42 U.S.C. 6311(1)(A)) DOE's test procedures for DPPPs are currently prescribed at 10 CFR 431.464(b) and DOE's energy conservation standards for DPPPs are prescribed at 10 CFR 431.465(f)–(h). The certification and reporting requirements for DPPPs are set forth in 10 CFR 429.59(b)(2)(iv) and (v) and (b)(3)(iv).

DOE's test procedure for determining DPPP energy efficiency was established in a final rule published on August 7, 2017. 82 FR 36858 (''August 2017 DPPP TP Final Rule''). The test procedure reflects the consensus of the Appliance Standards Rulemaking Federal Advisory Committee (''ASRAC'') negotiated rulemaking working group for DPPPs. (Docket No. EERE–2015–BT–STD–0008, Nos. 51 and 82) The August 2017 DPPP TP Final Rule also included certification and enforcement provisions for DPPPs. 82 FR 36858, 36907–36913.

In the August 2021 Certification NOPR, DOE proposed to clarify the certification reporting requirements for DPPPs in 10 CFR 429.59(b)(2)(iv) and (b)(3)(iv), in order to resolve potential confusion as to the scope of these provisions. 86 FR 43120, 43126.

II. Synopsis of the Final Rule

In this final rule, DOE is updating the certification reporting requirements as follows:

(1) Align the CFLK certification reporting requirements at 10 CFR 429.33 with the CFLK energy conservation standards relating to: (a) efficacy for light sources in CFLKs; (b) lumen maintenance, lifetime, and rapid cycle stress testing for medium screw base CFLs in CFLKs; (c) electronic ballasts for pin-based fluorescent lamps in CFLKs; (d) test sample size; and (e) kind of lamp.

(2) Include rated voltage and lamp diameter for IRLs and initial lumen output for GSILs in certification reports to determine applicable energy conservation standards under the GSIL and IRL certification reporting requirements at 10 CFR 429.27. Additionally, for IRLs, include CRI in certification reports.

(3) Align the ceiling fan certification reporting requirements at 10 CFR 429.32 with existing energy conservation standards established in the January 2017 Ceiling Fan ECS Final Rule and the Energy Act of 2020. Additionally, specify rounding requirements for CFM/W and CFEI. Also, add a reporting requirement for standby power consumption for small-diameter ceiling fans.

(4) Align the consumer furnace and boiler certification reporting requirements at 10 CFR 429.18 with the existing energy conservation standards by requiring reporting of standby mode and off mode energy consumption for classes with existing standby mode and off mode energy conservation standards, and specify explicitly that the requirement for certifying the type of ignition system applies to all gas-fired boilers.

(5) Add certification provisions at 10 CFR 429.17 to require water heater manufacturers to report the number of annual shipments of grid-enabled water heaters.

(6) Add certification provisions at 10 CFR 429.19 to require dishwasher manufacturers to indicate use of a new detergent formulation that replaces the detergent formulation currently specified, which has been discontinued.

(7) Add certification provisions at 10 CFR 429.46 to require CCW manufacturers to report model characteristics used for determining applicable standards and for conducting product-specific enforcement provisions; and specify rounding instructions for these reported values.

(8) Establish an annual filing date in 10 CFR 429.12, by which manufacturers of battery chargers are required to submit the required certification information to DOE.

(9) Clarify the certification reporting requirements in 10 CFR 429.59 for DPPPs.

The adopted amendments are summarized in Table II.2 and compared to the reporting requirements prior to the amendment, and the reason for the adopted change is included as well.

TABLE II.2—SUMMARY OF CHANGES TO CERTIFICATION REPORTING REQUIREMENTS RELATIVE TO CURRENT CERTIFICATION REPORTING REQUIREMENTS

Current DOE certification reporting requirements	Amended certification reporting requirements	Attribution
For CFLKs, no reporting requirement for efficacy for a lamp and integrated SSL circuitry.	Add reporting requirement to 10 CFR 429.33(b)(2)(ii)(A) for efficacy in lumens per watt (lm/W) and for lumen output in lumens (to determine the minimum efficacy standard) for a lamp and integrated SSL circuitry in a CFLK.	Required to verify whether the information provided is consistent with the certifier's statement of compliance with January 21, 2020, energy conservation standards.
For CFLKs, no reporting requirements for lumen maintenance at 1,000 hours, lumen maintenance at 40 percent of lifetime, the results of rapid cycle stress testing, and lifetime for medium screw base CFLs.	Add reporting requirements to 10 CFR 429.33(b)(2)(ii)(B) to specify the lumen maintenance at 1,000 hours in percent, lumen maintenance at 40 percent of lifetime in percent, number of units passing rapid cycle stress testing, and the lifetime in hours for medium screw base CFLs in a CFLK.	Required to verify whether the information provided is consistent with the certifier's statement of compliance with January 21, 2020, energy conservation standards.
For CFLKs, no reporting requirement specifying that a CFLK with pin-based sockets for fluorescent lamps have an electronic ballast.	Add reporting requirement to 10 CFR 429.33(b)(3)(ii)(C) to provide a declaration that CFLKs with pin-based sockets for fluorescent lamps have an electronic ballast.	Required to verify whether the information provided is consistent with the certifier's statement of compliance with January 21, 2020, energy conservation standards.
For CFLKs, no reporting requirement specifying that a CFLK is packaged with lamps to fill all sockets.	Add reporting requirement to 10 CFR 429.33(b)(3)(ii)(A) to provide a declaration that CFLKs are packaged with lamps to fill all sockets.	Required to verify whether the information provided is consistent with the certifier's statement of compliance with January 21, 2020, energy conservation standards.

TABLE II.2—SUMMARY OF CHANGES TO CERTIFICATION REPORTING REQUIREMENTS RELATIVE TO CURRENT CERTIFICATION REPORTING REQUIREMENTS—Continued

Current DOE certification reporting requirements	Amended certification reporting requirements	Attribution
For CFLKs, no reporting requirement for lab accreditation.	Add requirement to 10 CFR 429.33(b)(3)(ii)(B) for declaration that lamps packaged with CFLKs were tested by an International Laboratory Accreditation Cooperation (''ILAC'') accredited laboratory as required under 10 CFR 430.25.	Required to verify whether the information provided is consistent with the certifier's statement of compliance with laboratory accreditation requirements in 10 CFR 430.25.
For CFLKs, no reporting requirement for test sample size or kind of lamp for basic model of lamp.	Add a reporting requirement to 10 CFR 429.33(b)(2)(ii)(A) to provide the test sample size and kind of lamp for each basic model of lamp in the CFLK.	Required to verify whether the information provided is consistent with the certifier's statement of compliance with sampling requirements in 10 CFR 429.12(b).
For GSILs and IRLs, no reporting requirement for all metrics that aid in ensuring compliance.	Add reporting requirements for rated voltage, lamp diameter, and CRI for IRLs to 10 CFR 429.27(b)(2)(ii) and initial lumen output for GSILs to 10 CFR 429.27(b)(2)(iii).	Required to verify whether the information provided is consistent with the certifier's statement of compliance with existing standards or product class characterizations.
For ceiling fans, reporting requirement includes number of speeds and design requirement declaration.	Add reporting requirements to 10 CFR 429.32(b)(2) and (3) for small diameter ceiling fans to include blade span, ceiling fan efficiency in CFM/W, declarations regarding multi-head fans along with additional product-specific information for small-diameter ceiling fans: standby power, blade edge thickness, airflow (CFM) at high speed, blade RPM at high speed, and the distance between the ceiling and the lowest point on the fan blades (in both hugger and standard configurations for multi-mount fans).	Required to verify whether the information provided is consistent with the certifier's statement of compliance with January 21, 2020, energy conservation standards.
For ceiling fans, reporting requirement includes number of speeds and design requirement declaration.	Add reporting requirements for LDCF to 10 CFR 429.32(b)(2)(iii) to include CFEI for high speed and 40 percent speed or the nearest speed that is not less than 40 percent speed.	Required to verify whether the information provided is consistent with the certifier's statement of compliance with January 21, 2020, energy conservation standards.
For ceiling fans, no rounding requirements for the small diameter or large diameter ceiling fan efficiencies.	Amend 10 CFR 429.32 to specify that represented values of efficiency must be rounded to the nearest whole number for small diameter ceiling fans in terms of CFM/W and to the nearest hundredth for LDCF in terms of CFEI.	Required to verify whether the information provided is consistent with the certifier's statement of compliance with January 21, 2020, energy conservation standards.
For consumer boilers, non-weatherized oil-fired furnaces (including mobile home furnaces) and electric furnaces, no reporting requirement for standby mode and off mode energy consumption.	Add reporting requirement to 10 CFR 429.18(b)(2)(ii) for standby mode and off mode energy consumption of consumer boilers, non-weatherized oil-fired furnaces (including mobile home furnaces), and electric furnaces.	Required to verify whether the information provided is consistent with the certifier's statement of compliance with May 1, 2013, energy conservation standards for non-weatherized oil-fired furnaces (including mobile home furnaces) and electric furnaces, and the January 15, 2021, energy conservation standards for consumer boilers.
For gas-fired boilers, reporting requirement to certify type of ignition system applies only to cast iron sectional gas-fired boilers.	Removal of reporting requirement for type of ignition and addition of reporting requirement to 10 CFR 429.18(b)(3)(ii) for declaration that the manufacturer has not incorporated a constant burning pilot to apply to all gas-fired boilers.	Required to verify whether the information provided is consistent with the certifier's statement of compliance with September 1, 2012, energy conservation standards.
For hot water boilers, reporting requirement for declaration that the manufacturer has incorporated the applicable design requirements overlaps with new declaration that the manufacturer has not incorporated a constant burning pilot.	Removal of declaration that the manufacturer has incorporated the applicable design requirements and addition of reporting requirement to 10 CFR 429.18(b)(3)(iii) for whether the boiler is equipped with tankless domestic water heating coils (and if not, a declaration that the manufacturer has incorporated an automatic means for adjusting water temperature) to apply to all hot water boilers.	Required to verify whether the information provided is consistent with the certifier's statement of compliance with September 1, 2012, energy conservation standards.
For grid-enabled water heaters, no requirement for manufacturers to submit annual shipment data.	Require manufacturers to submit annual shipment data for grid-enabled water heaters at 10 CFR 429.17(c).	Required by EPCA under 42 U.S.C. 6295(e)(6)(C)(i).
For testing dishwashers, no reporting requirement for certification based on testing with an alternate detergent in place of the one currently specified for use, which has been discontinued.	Require manufacturers to report use of the new detergent formulation that replaces the detergent formulation currently specified at 10 CFR 429.19(b)(3)(vi).	Required to ensure that any assessment or enforcement testing would be performed using the same detergent used by the manufacturer for certifying compliance with the energy conservation standards.
For CCWs, no requirement for reporting of clothes container capacity, loading axis, or remaining moisture content value.	Add reporting requirements to 10 CFR 429.46(b)(2)(iii)–(v) for clothing container capacity, type of loading (top-loading or front-loading), and remaining moisture content, including applicable rounding instructions for these reported values at 10 CFR 429.46(c).	Required to verify whether the information provided is consistent with the certifier's statement of compliance with January 1, 2018, energy conservation standards and to conduct product-specific enforcement provisions.
For battery chargers, reporting requirements are included in 10 CFR 429.39, but no annual filing date is specified in 10 CFR 429.12.	Establish an annual filing date of September 1 at 10 CFR 429.12(d), by which manufacturers would be required to submit required reporting information to DOE.	Required to ensure certification information is current on an annual basis, consistent with the requirements for other covered products and equipment.
For DPPPs, includes certification reporting requirements for certain models that may cause confusion as to the scope of these provisions.	State explicitly in 10 CFR 429.59(b)(2)(iv) and 10 CFR 429.59(b)(3)(iv) that reporting requirements apply only to models subject to energy conservation standards.	Provide more explicit direction as to the applicability of current reporting requirements.

DOE is not amending the test procedures or energy conservation standards for CFLKs, GSILs, IRLs, ceiling fans, consumer furnaces and boilers, consumer water heaters, dishwashers, CCWs, battery chargers, or DPPPs in this final rule.

The effective date for the amended certification requirements adopted in this final rule is 30 days after publication of this document in the **Federal Register**. Certification reports for CFLKs, GSILs, IRLs, ceiling fans, consumer furnaces and boilers, consumer water heaters, dishwashers, CCWs, battery chargers, and DPPPs submitted beginning 210 days after publication of this final rule must comply with the applicable certification requirements as amended by this final rule. For certification reports submitted

after the effective date of this final rule, but prior to the compliance date, a manufacturer may optionally submit a certification report as required by the amendments in this final rule (*i.e.,* early compliance is permitted). The requirements pertaining to the compliance date and the provision for early compliance apply to all certification reports submitted as required by 10 CFR 429.12 (*i.e.,* annual certifications and certification of new and discontinued basic models).

III. Discussion

Certification of compliance to DOE is a mechanism that helps manufacturers understand their obligations for distributing models of covered products and equipment that are subject to energy conservation standards. Certification reports include characteristics of covered products or equipment used to determine which standard applies to a given basic model, and they also help DOE identify models and/or regulated entities that may not be in compliance with the applicable regulations.

As discussed in section I.B of this document, DOE proposed amendments to the certification and reporting requirements for certain products and equipment in the August 2021 Certification NOPR. 86 FR 43120, 43126–43127. DOE received a number of comments in response to the 2021 Certification NOPR, which are listed in section II, and are summarized in more detail in the following section. DOE also received comments regarding the proposals in the August 2021 Certification NOPR generally.

The Joint Commenters commented in favor of the proposed changes to the reporting requirements, agreeing with DOE's assessment that these updated requirements will ensure that certification reports reflect the information needed to determine compliance. The Joint Commenters also encouraged DOE to revise reporting requirements in a timely manner, noting that some of the proposed changes to requirements included in the August 2021 Certification NOPR were being proposed many years after the associated energy conservation standards went into effect. (Joint Commenters, No. 165, pp. 1–2)

Similarly, AHAM expressed support for the proposed reporting requirements, stating that the updated requirements would ensure consistency across product types. AHAM also commented that the updates would ensure consistency between testing to support certification and testing in support of DOE's enforcement efforts. (AHAM, No. 167, pp. 1–2)

AMCA commented generally that manufacturers should be allowed to report conservative ratings, which may be less than the calculated value determined using test data. (AMCA, No. 159, p. 2)

For the products and equipment addressed in this final rule, DOE has identified areas in which the current certification reporting requirements in 10 CFR part 429 are not consistent with the information required to verify whether the information provided is consistent with the certifier's statement of compliance with current energy conservation standards. DOE is amending the certification and reporting provisions for these products and equipment, as discussed in the following sections and generally as proposed in the August 2021 Certification NOPR, to ensure reporting that is consistent with currently applicable energy conservation standards and to ensure DOE has the information necessary to determine the appropriate classification of products for the application of standards. In addition to the specific amendments in the following sections, DOE is also adopting minor amendments to ensure consistency among terms used throughout DOE's certification and reporting provisions.

Regarding AMCA's comment that manufacturers should be allowed to report conservative ratings, in a prior rulemaking on certification, compliance, and enforcement, DOE explained that manufacturers may rate models conservatively, meaning the tested performance of the model(s) must be at least as good as the certified rating, after applying the appropriate product-specific sampling plan as set forth in 10 CFR part 429, subpart B. 76 FR 12422, 12429 (March 7, 2011). DOE clarified the use of conservative ratings within the discussion of the concept of ''basic model'' and noted that the sampling plans are designed to create conservative ratings, which ensures energy performance for consumers that is the same or better than the certified efficiency rating. *Id.* The amended certification and reporting provisions for the products and equipment in this final rule do not change a manufacturer's ability to rate conservatively.

A. Ceiling Fan Light Kits

1. Scope of Applicability

This final rule applies to CFLKs, which are products designed to provide light from a ceiling fan and can be either: (1) integral, such that the equipment is attached to the ceiling fan prior to the time of retail sale; or (2) attachable, such that at the time of retail sale the equipment is not physically attached to the ceiling fan, but may be included inside the ceiling fan packaging at the time of sale or sold separately for subsequent attachment to the fan. 10 CFR 430.2; 42 U.S.C. 6291(50). In the December 2015 CFLK TP Final Rule, DOE revised its interpretation of the CFLK definition to state that the requirement for a CFLK to be ''designed to provide light'' includes all light sources in a CFLK, including accent lighting. 80 FR 80209, 80214.

2. Reporting

Under the existing requirements in 10 CFR 429.33(b)(2), manufacturers must report: (1) system efficacy and rated wattage for CFLKs with medium screw base lamps; (2) system efficacy, rated wattage, and lamp length for CFLKs with pin-based fluorescent lamps; and (3) rated wattage and number of individual sockets for CFLKs with any other socket type. The existing reporting requirements also require a declaration that CFLKs with any other socket type (*i.e.,* not medium screw base or pin-based) meet the applicable design requirements. 10 CFR 429.33(b)(3). These requirements provide for certifying compliance with the January 1, 2007 standards.

In the August 2021 Certification NOPR, DOE noted that the reporting requirements at 10 CFR 429.33 continue to require manufacturers to report based on the January 1, 2007 standards, including information that is no longer relevant. 86 FR 43120, 43122. DOE added that this inconsistency between the reporting requirements and the January 21, 2020, standards may lead to confusion regarding which standards are applicable as well as the reporting of unnecessary information. *Id.* Therefore, DOE proposed in the August 2021 Certification NOPR to update the reporting requirements to address the January 21, 2020, standards and to remove the reporting requirements for the January 1, 2007 standard. *Id.* DOE sought comment on whether CFLKs manufactured prior to January 21, 2020, were still being distributed in commerce, and if the compliance requirements for these standards should be retained. *Id.* at 86 FR 43128.

ALA commented that it was aware of CFLKs manufactured prior to January 21, 2020, that are still being distributed in commerce and recommended that DOE retain the legacy compliance submission templates for these products. (ALA, No. 160, p. 2) Given that CFLKs manufactured prior to January 21, 2020, are still being

distributed in commerce, DOE is retaining the regulations for the certification requirements for CFLKs manufactured prior to January 21, 2020. As discussed, DOE is also adding separate reporting requirements applicable to CFLKs manufactured on or after January 21, 2020, that align with the January 21, 2020 standards. DOE discusses these updates in the sections that follow.

a. Efficacy

The January 21, 2020, standards require that all lamps and integrated SSL packaged with CFLKs meet certain efficacy standards based on the lumens of the lamp. 10 CFR 430.32(s)(6). To reflect the January 21, 2020 standards, DOE proposed in the August 2021 Certification NOPR to require manufacturers to identify, in a certification report, each basic model of lamp or integrated SSL circuitry packaged with the CFLK basic model and to provide the corresponding lumen output in lumens and the efficacy in lumens per watt (''lm/W'') for each lamp/SSL basic model. 86 FR 43120, 43128. The inclusion of basic model number, associated lumen output, and efficacy in the certification report would provide the necessary data to determine whether the basic model of the lamp in the CFLK complies with the January 21, 2020, standards requiring a minimum efficacy based on the lumens of the lamp. *Id.*

Additionally, the current test procedures and reporting requirements for various lighting products do not all use the same terms for lumen output and efficacy (*e.g.,* lumen output, average lumen output, initial lumen output, rated lumen output, efficacy, lamp efficacy, initial lamp efficacy, system efficacy). In the August 2021 Certification NOPR, DOE proposed to amend the reporting requirements to use the common terms ''lumen output'' and ''efficacy'' to identify the required values, and to make conforming revisions to the rounding requirements at 10 CFR 429.33(c). *Id.* DOE did not receive any comments on these proposals. For the reasons discussed in this final rule and in the August 2021 Certification NOPR, DOE is adopting these amendments as proposed in the August 2021 Certification NOPR.

b. Lumen Maintenance, Lifetime, and Rapid Cycle Stress Test

Both the January 1, 2007 standards and January 21, 2020 standards include, for medium screw base CFLs packaged with a CFLK, minimum requirements for lumen maintenance at 1,000 hours, lumen maintenance at 40 percent of lifetime, lifetime, and the number of units in the tested sample that must pass the rapid cycle stress test. 10 CFR 430.32(s)(3)(i) and (s)(6)(i). Currently, the reporting requirements do not reflect these requirements for CFLs packaged with CFLKs.

In the August 2021 Certification NOPR, DOE proposed to add reporting requirements for CFLKs packaged with a medium screw base CFL that would enable manufacturers to certify compliance with the January 21, 2020 standards. 86 FR 43120, 43128. Specifically, for CFLKs packaged with a medium screw base CFL, DOE proposed to require reporting of the following information for each basic model of CFL: lumen maintenance at 1,000 hours and lumen maintenance at 40 percent of lifetime in percentages; lifetime in hours; and the number of CFL units that pass rapid cycle stress testing. *Id.* Similar to DOE's reporting requirements for CFLs sold individually (*see* 10 CFR 429.35), DOE proposed allowing certification of lumen maintenance at 40 percent of lifetime, lifetime, and rapid cycle stress testing of a medium screw base CFL in a CFLK to be based on estimates when initially testing a new basic model, which would allow new basic models of CFLKs with medium screw based CFLs to be distributed in commerce prior to completion of lifetime testing, and DOE sought comment on this proposal. *Id.*

DOE did not receive any comments on reporting lumen maintenance at 1,000 hours and at 40 percent of lifetime, lifetime, and the rapid cycle stress test results for medium screw base CFLs in CFLKs. In addition, DOE did not receive any comments on allowing estimates for lumen maintenance at 40 percent of lifetime, lifetime, and the rapid cycle stress test result.

For the reasons discussed here and in the August 2021 Certification NOPR, in this final rule, DOE is adopting these requirements as proposed in the August 2021 Certification NOPR.

c. Design Requirement Declarations

The January 21, 2020, standards continue to require that CFLKs with pin-based sockets for fluorescent lamps use an electronic ballast. 10 CFR 430.32(s)(6)(ii). The current certification reporting requirements require for CFLKs with any socket type other than medium screw base or pin base a declaration that the basic model meets the applicable EPCA design requirement [13] and that the features that have been incorporated into the ceiling fan light kit meet the applicable design requirement (*e.g.,* circuit breaker, fuse, ballast). 10 CFR 429.33(b)(3). In the August 2021 Certification NOPR, DOE proposed to make this declaration more specific to existing requirements by requiring that, for a CFLK with a pin-based socket for a fluorescent lamp, the manufacturer provide in the certification report a declaration that that such a CFLK has an electronic ballast. 86 FR 43120, 43128. This proposal would allow manufacturers to specifically certify that basic models of CFLKs with pin-based socket fluorescent lamps comply with the requirement in the January 21, 2020, standard for such products to have an electronic ballast. 10 CFR 429.12(b).

The January 21, 2020, standards also continue to require that, for all lamp types, the CFLK be packaged with lamps to fill all of the sockets. 10 CFR 430.32(s)(6). In the August 2021 Certification NOPR, DOE proposed to require a declaration that the CFLK is packaged with lamps sufficient to fill all of the lamp sockets. 86 FR 43120, 43128. The declaration would provide DOE with data indicating whether the manufacturers have addressed the requirement in the January 21, 2020, standard that for all lamp types the CFLK is packaged with lamps to fill all of the sockets. *Id.*

DOE did not receive any comments on requiring a declaration that pin-based fluorescent lamps in CFLKs have an electronic ballast. In addition, DOE did not receive any comments on requiring a declaration that the CFLK are packaged with lamps sufficient to fill all sockets.

In the August 2021 Certification NOPR, DOE proposed that these two declarations would be included in the certification report as public information. 86 FR 43120, 43128. Public information is made available to consumers in DOE's Compliance Certification Database (''CCD'') [14] available at *www.regulations.doe.gov/certification-data.* DOE notes that in the case of these two declarations, every valid certification must include a positive declaration (*i.e.,* ''Yes''); as such, the statement of declaration is not a characteristic that would provide any differentiation among products listed in the CCD (*i.e.,* every product in the public database would be designated as ''Yes''). DOE also notes that the existing similar declaration requirement

[13] CFLKs that meet the January 21, 2020, efficacy standards are presumed to meet the EPCA-mandated 190 W limit requirement. *See* 42 U.S.C. 6295(ff)(4)(C) and 10 CFR 430.32(s)(5).

[14] As described on the CCD website, the CCD offers consumers an easy-to-use search function for existing records in a readily downloadable format. There is also a consumer-friendly selection tool as well as a search-by-model function.

applicable to CFLKs with any other socket type manufactured prior to January 1, 2020, is designated as non-public as codified at 10 CFR 429.33(b)(3). In an effort to promote the simplification and usability of the CCD for consumers and other interested parties by including relevant information that can be used to differentiate among products within the database, DOE is designating these two new declaration requirements, applicable to products manufactured on or after January 1, 2020, as non-public (*i.e.,* they would not be listed in the CCD) and codifying them at 10 CFR 429.33(b)(3)(ii)(A) and (C), respectively.

d. Basic Model, Lamp Type, and Sample Size Requirements

In the August 2021 Certification NOPR, DOE also proposed certain certification reporting requirements for CFLKs to provide further specificity as to what is required to be reported. 86 FR 43120, 43129. Specifically, DOE proposed adding language in 10 CFR 429.33(b) stating that manufacturers must provide the brand, basic model number, and other additional lamp-specific information for each basic model of lamp included in the basic model of CFLK under test. *Id.* This proposal would allow DOE to use the appropriate certification values to verify whether the information provided is consistent with the certifier's statement of compliance with January 21, 2020 standards. If the same basic model of lamp is used in multiple CFLK basic models, manufacturers may use the same set of test data for that basic model of lamp to show compliance for each CFLK basic model in which it is included. *Id.*

In the August 2021 Certification NOPR, DOE also proposed requiring that manufacturers provide the test sample size and kind of lamp for each basic model of a lamp and/or each basic model of integrated SSL circuitry packaged with a basic model of CFLK. 86 FR 43120, 43129. Because pin-based socket fluorescent lamps and medium-based socket CFLs in CFLKs are lamp types subject to additional standards, the lamp type of the basic model of lamp in the CFLK is necessary to determine the product class applicable to the basic model of CFLK. *Id.*

Additionally, DOE proposed requiring that manufacturers provide, if applicable, a declaration that each basic model of lamp packaged with the basic model of CFLK was tested by a laboratory accredited as required under 10 CFR 430.25.[15] 86 FR 43120, 43129. Lamps specified in 10 CFR 430.25 must be tested by laboratories with these accreditation requirements, and this declaration will allow DOE to verify whether the information provided is consistent with the certifier's statement of compliance with this requirement. In the August 2021 Certification NOPR, DOE inadvertently proposed in the CFR text that this declaration would be included under 10 CFR 429.33(b)(2)(ii)(B), which would make it a public certification requirement. For consistency with other reporting requirements that require only a ''yes'' or ''no'' response, DOE is moving this declaration to 10 CFR 429.33(b)(3)(ii)(B) in this rulemaking and clarifying that it is a non-public reporting requirement.

DOE received comments from both TIC and ALA regarding the proposed declaration that lamps packaged with CFLKs were tested by an accredited laboratory as required under 10 CFR 430.25. TIC proposed re-wording the description of the proposed requirement to state that ''lamps packaged with CFLKs were tested by a laboratory accredited by an accreditation body that is a signatory to the International Laboratory Accreditation Cooperation (''ILAC'') Mutual Recognition Arrangement (''MRA'') as required under 10 CFR 430.25.'' (TIC, No. 161, p. 1) DOE notes that the wording recommended by TIC is consistent with the regulatory language of 10 CFR 430.25, and therefore that DOE's proposal to reference ''a laboratory accredited as required under § 430.25'' is consistent with TIC's recommendation.

ALA expressed support for DOE's efforts to harmonize efficiency reporting data to reflect the current standards for CFLKs, but also requested that DOE affirm that the requirements identified in 10 CFR 430.25 allow for manufacturers to conduct their own testing, and that reporting from accredited manufacturer-owned labs will be allowed. (ALA, No. 160, p. 2) DOE notes that 10 CFR 430.25 specifically provides that ''A manufacturer's or importer's own laboratory, if accredited, may conduct the applicable testing.'' DOE finds this existing language sufficiently explicit on the matter of ALA's request and, therefore, is not revising 10 CFR 430.25 as part of this final rule.

e. Rounding Requirements

In the August 2021 Certification NOPR, DOE proposed rounding requirements for the certification reporting requirements proposed in the same document. 86 FR 43120, 43129. DOE proposed that lumen output be rounded to three significant digits; lumen maintenance at 1,000 hours and at 40 percent of lifetime be rounded to the nearest tenth of a percent; and lifetime be rounded to the nearest whole hour. *Id.* Currently, DOE specifies that any represented value of initial lamp efficacy, system efficacy, or luminaire efficacy be rounded to the nearest tenth. DOE proposed simplifying these requirements to state any represented value of efficacy be rounded to the nearest tenth. *Id.*

DOE did not receive any comments in response to the proposed rounding requirements and is adopting them as proposed in the August 2021 Certification NOPR.

3. Reporting Costs and Impacts

As discussed, in the August 2021 Certification NOPR, DOE proposed aligning CFLK certification reporting requirements with the energy conservation standard requirements applicable to CFLKs manufactured on and after January 21, 2020. 86 FR 43120, 43129.

For CFLKs with sockets for medium screw base lamps, manufacturers currently report two values (*i.e.,* efficacy and wattage), but would report four to nine values (*e.g.,* efficacy, lumen output, test sample size, kind of lamp, a declaration of ILAC accreditation, lumen maintenance at 40 percent of lifetime, lumen maintenance at 1,000 hours, lifetime, units passing rapid cycle stress test), depending on the kind of lamps packaged with the CFLK, under the reporting requirements proposed in the August 2021 Certification NOPR. 86 FR 43120, 43129. For CFLKs with pin-based sockets for fluorescent lamps, manufacturers currently report three values (*i.e.,* efficacy, wattage, length of lamp) but would report five values (*i.e.,* efficacy, lumen output, test sample size, kind of lamp, and a declaration of ILAC accreditation), under the proposed reporting requirements. *Id.* For CFLKs with lamps of other socket types, manufacturers currently report two values (*i.e.,* wattage, number of individual sockets), but would report five values (*i.e.,* efficacy, lumen output, test sample size, kind of lamp, and a

[15] 10 CFR 430.25 states that the testing for GSFLs, GSILs (with the exception of lifetime testing), GSLs (with the exception of applicable lifetime testing), IRLs, CFLs, and fluorescent lamp ballasts, and integrated LED lamps must be conducted by test laboratories accredited by an Accreditation Body that is a signatory member to the International Laboratory Accreditation Cooperation (ILAC) Mutual Recognition Arrangement (MRA). A manufacturer's or importer's own laboratory, if accredited, may conduct the applicable testing.

declaration of ILAC accreditation), under the proposed reporting requirements. *Id.*

In the August 2021 Certification NOPR, DOE tentatively determined that these amendments would not impose additional costs for manufacturers because manufacturers of CFLKs are already submitting certification reports to DOE and should have readily available the information that DOE proposed to collect. *Id.* DOE stated that it did not believe the revised reporting requirements would cause any measurable change in reporting burden or hours as compared to what CFLK manufacturers are currently doing today, but DOE requested comment on the certification reporting costs. *Id.*

ALA stated that complying with the proposed reporting obligations would require a significant effort by industry to modernize the certification process. ALA added, however, that adopting these revised reporting requirements would not be overly burdensome for manufacturers. (ALA, No. 160, p. 1) DOE did not receive any other comments regarding the certification reporting costs of the proposed CFLK amendments, and ALA did not provide any data indicating increased costs to manufacturers related to reporting. Further, ALA did not provide any data or more specific information about how the additional required certification data would require a significant effort to modernize the certification process. The reporting of the additional values would be accomplished using the existing on-line data templates in DOE's Compliance and Certification Management System (''CCMS''). Further, the additional values are measurements and calculations required under the current DOE test procedure, and therefore should be available to the manufacturers. Based on the preceding discussion and the discussion in the August 2021 Certification NOPR, DOE makes a final determination that these amendments would not cause any measurable change in reporting burden or hours as compared to what CFLK manufacturers are currently doing today.

B. GSILs and IRLs

1. Scope of Applicability

This final rule applies to GSILs and IRLs. DOE defines GSILs as a standard incandescent or halogen type lamp intended for general service applications; has a medium screw base; has a lumen range between 310–2600 lumens or, in the case of a modified spectrum lamp, between 232–1,950 lumens; and is capable of being operated at a voltage range at least partially within 110–130 volts. 10 CFR 430.2. The GSIL definition does not include certain lamp types (see 10 CFR 430.2). DOE defines IRLs as any lamp in which light is produced by a filament heated to incandescence by an electric current; contains an inner reflective coating on the outer bulb to direct the light; is not colored; is not designed for rough or vibration service applications; is not an R20 short lamp; has an R, PAR, ER, BR, BPAR,[16] or similar bulb shapes with an E26 medium screw base; has a rated voltage or voltage range that lies at least partially in the range of 115–130 volts; has a diameter that exceeds 2.25 inches; and has a rated wattage that is 40 watts or higher. 10 CFR 430.2.

2. Reporting

Under the existing requirements in 10 CFR 429.27(b)(2)(ii) for IRLs, manufacturers must report: (1) the testing laboratory's ILAC accreditation body's identification number or other approved identification assigned by the ILAC accreditation body; (2) production dates of the units tested; (3) the 12-month average lamp efficacy in lumens per watt (lm/W); and (4) lamp wattage (W).

For IRLs (as well as GSFLs), DOE also specifies at 10 CFR 429.12(e)(2) that prior to or concurrent with the distribution of a new basic model, each manufacturer shall submit an initial certification report listing the basic model number, lamp wattage, and date of first manufacture (*i.e.,* production date) for that basic model. The certification report must also state how the manufacturer determined that the lamp meets or exceeds the energy conservation standards, including a description of any testing or analysis the manufacturer performed. Manufacturers of GSFLs and IRLs shall submit the certification report required by 10 CFR 429.27(b) within one year after the first date of new model manufacture.

In the June 2021 Lighting TP NOPR, DOE proposed to include a test method for determining CRI of IRLs. 86 FR 29888, 29902. To verify whether the information provided is consistent with the certifier's statement of compliance with standards, DOE proposed in the August 2021 Certification NOPR to require the reporting of CRI for IRLs. 86 FR 43120, 43129. Additionally, for IRLs, DOE proposed to require the reporting of rated voltage and lamp diameter. *Id.* Because rated voltage and lamp diameter are used to determine the applicable energy conservation standards for IRLs, collecting this information would help DOE evaluate whether a basic model meets the appropriate energy conservation standard requirements (*see* 10 CFR 430.32(n)(6)).

In the June 2021 Lighting TP NOPR, DOE also proposed to remove the current requirement at 10 CFR 429.27(a)(2)(i), applicable to IRLs, that the sampling plan must include a minimum of three lamps selected from each month of production for a minimum of 7 out of a 12-month period. 86 FR 29888, 29905. Additionally, DOE proposed to remove the requirement in 10 CFR 429.12(e)(2) to submit an initial certification report prior to or concurrent with the distribution of a new basic model for IRLs (as well as GSFLs). *Id.* Hence, in the August 2021 Certification NOPR, DOE did not propose any changes to the requirements for the initial certification report for IRLs. DOE proposed adding rated voltage, lamp diameter and CRI for IRLs only for annual filing certification reporting. 86 FR 43120, 43129.

In its comments on the August 2021 Certification NOPR, NEMA opposed the adoption of the proposed requirement to report CRI for IRLs, asserting that it is inconsistent with EISA 2007, which prescribes CRI reporting requirements for GSLs but not IRLs. (NEMA, No. 164, p. 1) NEMA otherwise expressed general support for the GSIL and IRL reporting requirements proposed in the August 2021 Certification NOPR. *Id.*

DOE disagrees with NEMA's assertion that IRLs are not subject to a CRI requirement. EISA 2007 established a CRI requirement for IRLs. Specifically, section 321(a)(3)(A)(ii) of EISA 2007 established CRI requirements for lamps that are intended for general service or general illumination application (whether incandescent or not); have a medium screw base or any other screw base not defined in ANSI C81.61–2006; are capable of operating at a voltage at least partially within the range of 110 to 130 volts; and are manufactured or imported after December 31, 2011. As previously discussed, the recently published May 2022 Definition Final Rule expanded the definition of GSL to include IRLs because DOE concluded that IRLs are used in general lighting applications. 82 FR 27461, 27467, 27481. Because IRLs are intended for general service application, have a medium screw base, and a voltage between 110 to 130 volts, they meet the criteria of section 321(a)(3)(A)(ii) of EISA 2007 and are subject to the CRI requirement.

[16] Reflector (''R''), parabolic aluminized reflector (''PAR''), elliptical reflector (''ER''), bulged reflector (''BR''), bulged parabolic aluminized reflector (''BPAR'').

DOE did not receive any other comments on requiring the reporting of CRI to certify compliance with the existing energy conservation standards for IRLs, nor did DOE receive any comments on requiring the reporting of lamp diameter and rated voltage to help determine the applicable energy conservation standard for IRLs.

For the reasons discussed here and in the August 2021 Certification NOPR, in this final rule, DOE is adopting the reporting requirements for IRLs as proposed in the August 2021 Certification NOPR. As described, these reporting requirements apply only to annual filing certification reporting. If the amendment proposed in the June 2021 Lighting TP NOPR to remove the requirement for IRLs to submit an initial certification report is not adopted, DOE will consider adding these additional reporting requirements to the initial certification reporting requirements in a future separate rulemaking.

Under the existing requirements in 10 CFR 429.27(b)(2)(iii) for GSILs, manufacturers must report: (1) the testing laboratory's ILAC accreditation body's identification number or other approved identification assigned by the ILAC accreditation body; (2) production dates of the units tested; (3) the 12-month average maximum rate wattage in watts (''W''); (4) the 12-month average minimum rated lifetime (hours); and (5) the 12-month average CRI.

In the August 2021 Certification NOPR, DOE proposed to require the reporting of initial lumen output for GSILs because this value is needed to evaluate whether a basic model meets the appropriate energy conservation standard requirements (*see* 10 CFR 430.32(x)).[17] 86 FR 43120, 43130. DOE did not receive any comments on requiring the reporting of initial lumen output for GSILs. For the reasons discussed here and in the August 2021 Certification NOPR, in this final rule, DOE is adopting this amendment to the reporting requirements for GSILs as proposed in the August 2021 Certification NOPR.

3. Reporting Costs and Impacts

As discussed, in the August 2021 Certification NOPR, DOE proposed to align IRL certification reporting requirements with the existing energy conservation standard requirements. 86 FR 43120, 43128. Additionally, DOE proposed to include reporting requirements for GSILs and IRLs that will help DOE determine applicable energy conservation standards for these products. *Id.*

For IRLs, manufacturers currently certify four values (*i.e.,* ILAC accreditation, production dates, lamp efficacy, and lamp wattage), and would report three additional values (*i.e.,* CRI, lamp diameter, rated voltage) under the requirements proposed in the August 2021 Certification NOPR. 86 FR 43120, 43130. GSIL manufacturers currently report five values (*i.e.,* ILAC accreditation, production dates, wattage, lifetime, and CRI), and would report one additional value under the proposed reporting requirements (*i.e.,* lumens). *Id.* DOE notes that, in the June 2021 Lighting TP NOPR, it proposed to remove the reporting of production dates for IRLs and GSILs. 86 FR 29888, 29905.

In the August 2021 Certification NOPR, DOE tentatively determined that these amendments would not impose additional costs for manufacturers because manufacturers of IRLs and GSILs are already submitting certification reports to DOE. 86 FR 43120, 43130. Manufacturers should have readily available the information that DOE proposed to require as part of this rulemaking because such information is necessary to determine applicable energy conservation standards or to meet existing statutory requirements. DOE stated in the August 2021 Certification NOPR that it did not believe that the revised reporting requirements would cause any measurable change in reporting burden or hours as compared to what manufacturers of IRLs and GSILs are currently doing today. *Id.*

NEMA commented that there are several DOE proceedings that may apply to or otherwise impact GSILs and IRLs. NEMA urged DOE to align the requirements and implementation dates for these proceedings to minimize unnecessary burden on those directly impacted by these regulations. (NEMA, No. 164, p. 2)

For the reasons discussed in the prior paragraphs and in the August 2021 Certification NOPR, in this final rule, DOE is adopting the reporting requirements for GSILs and IRLs as proposed. Compliance with these amended reporting requirements is not required until 210 days after publication of this final rule. The reporting of the additional values will be through the existing on-line CCMS process using data templates maintained by DOE, and the additional values reflect an existing requirement (*i.e.,* CRI values required under section 321(a) of EISA 2007) and are measurements and calculations required under the current DOE standard and/or test procedure for GSILs and IRLs. Specifically, determining which standard an IRL is subject to requires lamp diameter and the IRL standard and test procedure requires measurement of rated wattage. Determining which standard a GSIL is subject to requires lumens and the measurement of the metric is also specified in the test procedure. Therefore, the values should be available to manufacturers. Based on the preceding discussion and the discussion in the August 2021 Certification NOPR, DOE makes a final determination that these amendments would not cause any measurable change in reporting burden or hours for GSIL and IRL manufacturers.

C. Ceiling Fans

1. Scope of Applicability

EPCA defines ''ceiling fan'' as ''a nonportable device that is suspended from a ceiling for circulating air via the rotation of fan blades.'' (42 U.S.C. 6291(49)) DOE codified the statutory definition in 10 CFR 430.2. In the July 2016 Ceiling Fan TP Final Rule, DOE stated that the test procedure applies to any product meeting this definition, including fans designed for applications where large airflow volume may be needed and highly decorative fans. 81 FR 48620, 48622. DOE stated, however, that the ceiling fan test procedure does not apply to the following fans: belt-driven ceiling fans, centrifugal ceiling fans, oscillating ceiling fans, and ceiling fans whose blades' plane of rotation cannot be within 45 degrees of horizontal. *Id.*

Relevant to this final rule, DOE defines ''small-diameter ceiling fan'' in section 1.17 of appendix U as a ceiling fan that is less than or equal to seven feet in diameter. DOE defines a ''large-diameter ceiling fan'' in section 1.11 of appendix U as a ceiling fan that is greater than seven feet in diameter.

2. Reporting

The current requirements for certification reports for ceiling fans correspond to the design requirements specified in EPCA. (*See* 42 U.S.C. 6295(ff)(1)) These reporting requirements are set forth at 10 CFR 429.32(b) and require reporting of the number of speeds within the ceiling fan controls and a declaration that the manufacturer has incorporated the applicable design requirements. The current certification requirements do not reflect the amended energy conservation standards adopted in the January 2017 Ceiling Fan ECS final rule or the amended standards for LDCFs

[17] For GSILs, the applicable standards depend on the rated lumen output of the basic model.

adopted by Congress in the Energy Act of 2020. *See* 82 FR 6826; 42 U.S.C. 6295(ff)(6)(C)(i), as codified; 86 FR 28469.

In the August 2021 Certification NOPR, DOE proposed maintaining the required declaration that the manufacturer has incorporated the applicable design requirements as a public reporting requirement codified at 10 CFR 429.32(b)(2). 86 FR 43120, 43131. Similar to the declarations applicable to CFLKs discussed in section III.A.2.c of this document, DOE notes that in the case of this declaration for ceiling fans, every valid certification must include a positive declaration (*i.e.,* ''Yes''). As such, the statement of declaration is not a characteristic that provides any differentiation among products listed in the CCD (*i.e.,* every product in the public database would be designated as ''Yes''). In an effort to promote the simplification and usability of the CCD for consumers and other interested parties by including relevant information that can be used to differentiate among products within the database, DOE is designating this declaration requirement as non-public (*i.e.,* it would not be listed in the CCD) and codifying it at 10 CFR 429.32(b)(3) accordingly in this final rule.

a. Small-Diameter Ceiling Fan Requirements

In the September 2019 Ceiling Fan TP NOPR, DOE proposed to update the reporting requirements for ceiling fans to include product-specific information that would be required to certify compliance with the amended energy conservation standards established in January 2017 Ceiling Fan ECS Final Rule. 84 FR 51440, 51450. DOE did not finalize the proposed requirements from the September 2019 Ceiling Fan TP NOPR and revisited the certification and rounding requirements with a new proposal in the August 2021 Certification NOPR. 86 FR 43120, 43130–43131.

Product-specific information is necessary to determine the product class and minimum allowable ceiling fan efficiency required to certify compliance with current energy conservation standards. For small-diameter ceiling fans, the product class (*i.e.,* very small-diameter, standard, hugger, or high-speed small-diameter) is determined using blade span (in), blade edge thickness (in), airflow (CFM) at high speed, blade revolutions per minute (''RPM'') at high speed, and the represented distance (in) between the ceiling and the lowest point on the fan blades. Further, identification of whether a small-diameter ceiling fan is a multi-head ceiling fan is necessary to determine applicable standards. Specifically, a multi-head ceiling fans requires calculating ceiling fan efficiency differently than other small-diameter ceiling fans by including the airflow and power consumption of all fan heads (*see* section 4.1.1 of appendix U).

Accordingly, DOE proposed in the August 2021 Certification NOPR to require that certification reports include the following public product-specific information for each ceiling fan basic model: (1) blade span in inches; (2) ceiling fan efficiency in CFM/W; and (3) a declaration of whether the fan is a multi-head ceiling fan. 86 FR 43120, 43130.

For each ceiling fan basic model, DOE also proposed to require additional product-specific information, including: (1) blade edge thickness (in), airflow (CFM) at high speed, and blade RPM at high speed; and (2) for low-speed small-diameter (''LSSD'') ceiling fans, the distance (in) between the ceiling and the lowest point on the fan blades. *Id.* Manufacturers are already required to determine these values as part of the current test procedure for ceiling fans and would be required to use these values to determine which amended energy conservation standards apply to their basic models. *Id.* at 86 FR 43130–43131.

Further, DOE proposed in the August 2021 Certification NOPR to require reporting of standby power consumption (in watts) for small-diameter ceiling fans. *Id.* at 86 FR 43131. DOE notes that standby power consumption is already required to be measured in section 3.6 of appendix U and is an input into the calculation of ceiling fan efficiency in section 4 of appendix U. Therefore, DOE tentatively determined that the reporting of standby power for these ceiling fans would not result in an increase in reporting burden for manufacturers. *Id.*

ALA generally supported DOE's efforts to harmonize efficiency reporting data to reflect the current standards as it would provide much needed clarity. (ALA, No. 160, p. 1) DOE received no other comments in response to its proposed amendments to the requirements for small-diameter ceiling fans. For the reasons discussed here, and in the August 2021 Certification NOPR, in this final rule, DOE is adopting these amendments as proposed in the August 2021 Certification NOPR.

b. Large-Diameter Ceiling Fan Requirements

As discussed, the distinction between small-diameter and large-diameter ceiling fans is based on blade span. The Energy Act of 2020 required that LDCFs must meet two separate standards based on the CFEI metric, with one standard based on operation of the fan at high speed and a second standard based on operation of the fan at 40 percent speed or the nearest speed that is not less than 40 percent speed. (*See* 42 U.S.C. 6295(ff)(6)(C)(i)(II), as codified) Accordingly, DOE proposed in the August 2021 Certification NOPR to amend the reporting requirements for LDCFs to require reporting blade span in inches, CFEI for high speed, and CFEI for 40 percent speed or the nearest speed that is not less than 40 percent speed. 86 FR 43120, 43131.

In response to the August 2021 Certification NOPR, AMCA supported the proposed reporting requirements for large-diameter fans. AMCA also proposed that two additional reporting requirements be added—airflow (CFM) at high speed and airflow (CFM) at 40 percent speed or the nearest speed that is not less than 40 percent speed. (AMCA, No. 159, p. 2) AMCA stated that requiring manufacturers to document CFEI and any two of the three parameters will help prevent cheating because with any three values (CFEI and two others), the fourth value can be calculated with certainty. Further, AMCA noted that adding the two additional values to DOE's proposed filing requirements would not impose an additional burden on manufacturers because they are taken from the test laboratory report. *Id.* DOE did not receive any other comments in response to the proposed LDCF requirements.

Although airflow in CFM is measured by the test procedure and is required for calculating CFEI (*i.e.,* the metric on which the energy efficiency standards for LDCFs are based), the airflow values themselves are not required to determine compliance with standards. Therefore, DOE is not including them in these finalized reporting requirements.

In this final rule, for the reasons discussed in the preceding paragraphs and the August 2021 Certification NOPR, DOE is adopting the revised reporting requirements for LDCFs as proposed in the August 2021 Certification NOPR.

c. Rounding Requirements

In the August 2021 Certification NOPR, DOE proposed amendments to 10 CFR 429.32 to specify that represented values are to be determined consistent with the test procedures in appendix U and to specify rounding requirements for represented values. 86 FR 43120, 43131. DOE proposed that manufacturers round any represented

value of ceiling fan efficiency for small diameter ceiling fans, expressed in CFM/W, to the nearest whole number. *Id.* Additionally, for LDCF, DOE proposed to specify that any represented value of CFEI must be rounded to the nearest hundredth. *Id.*

ALA commented in support of the small-diameter ceiling fan rounding requirements as proposed in the August 2021 Certification NOPR, and stated that the proposed requirements would align with the Federal Trade Commission's labeling rounding requirements. (ALA, No. 160, p. 1–2) AMCA expressed support for the proposed rounding of CFEI values to the nearest hundredth. (AMCA, No. 159, p. 2)

In this final rule, for the reasons discussed in the preceding paragraphs and the August 2021 Certification NOPR, DOE is adopting the rounding requirements as proposed in the August 2021 Certification NOPR.

3. Reporting Costs and Impacts

As discussed, in the August 2021 Certification NOPR, DOE proposed to align ceiling fan certification reporting requirements with the energy conservation standard requirements applicable to ceiling fans manufactured on and after January 21, 2020, and with the May 2021 Technical Amendment. 86 FR 43120, 43131.

For all ceiling fans, manufacturers currently report two fields (*i.e.,* the number of speeds within the ceiling fan controls and a declaration that the manufacturer has incorporated the applicable design requirements). 10 CFR 429.32(b)(2). The proposed requirements would add a variable number of additional reporting fields, depending on the product class. For small-diameter ceiling fans, manufacturers would be required to report five to eight additional fields (*i.e.,* blade span, CFM/W, standby power, a declaration whether the fan is a multi-head ceiling fan, blade edge thickness, CFM and RPM at high speed, and the represented distance between the ceiling and the lowest point on the fan blades). For LDCF, manufacturers would be required to report three additional fields (*i.e.,* blade span, CFEI for high speed and 40 percent speed or the nearest speed that is not less than 40 percent speed). 86 FR 43120, 43131.

In the August 2021 Certification NOPR, DOE tentatively determined that these amendments would not impose additional costs for manufacturers because manufacturers of ceiling fans are already submitting certification reports to DOE and should have readily available the information that DOE proposed to collect. *Id.* Any added fields would be reflective of the product-specific information needed to verify whether the information provided is consistent with the certifier's statement of compliance with the energy conservation standard requirements applicable to ceiling fans manufactured on and after January 21, 2020, as established in the January 2017 Ceiling Fan ECS Final Rule and the Energy Act of 2020. DOE stated in the August 2021 Certification NOPR that it did not believe that the revised reporting requirements would cause any measurable change in reporting burden or hours as compared to the current requirements for ceiling fan manufacturers. *Id.*

ALA generally commented that while manufacturers spend considerable time preparing for and certifying their products, adjusting to the additional information requested in the proposal should not be overly burdensome for manufacturers. (ALA, No. 160 at p. 1) Otherwise, DOE did not receive any comments on the certification and reporting costs of the amended reporting requirements for ceiling fans. Based on the preceding discussion and the discussion in the August 2021 Certification NOPR, DOE makes a final determination that these amendments would not cause any measurable change in reporting burden or hours for ceiling fan manufacturers.

D. Consumer Furnaces and Boilers

1. Scope of Applicability

EPCA defines the term ''furnace'' to mean a product which utilizes only single-phase electric current, or single-phase electric current or direct current (DC current) in conjunction with natural gas, propane, or home heating oil, and which: (1) is designed to be the principal heating source for the living space of a residence; (2) is not contained within the same cabinet with a central air conditioner whose rated cooling capacity is above 65,000 British thermal units per hour (Btu/h); (3) is an electric central furnace, electric boiler, forced-air central furnace, gravity central furnace, or low pressure steam or hot water boiler; and (4) has a heat input rate of less than 300,000 Btu/h for electric boilers and low pressure steam or hot water boilers and less than 225,000 Btu/h for forced-air central furnaces, gravity central furnaces, and electric central furnaces. (42 U.S.C. 6291(23)) DOE has codified this definition at 10 CFR 430.2, where it also defines ''electric central furnace,'' ''electric boiler,'' ''forced-air central furnace,'' ''gravity central furnace,'' and ''low pressure steam or hot water boiler''.

The changes discussed in this section apply to non-weatherized oil-fired furnaces, electric furnaces, and consumer boilers meeting the definitions in 10 CFR 430.2, as presented in the preceding paragraph.

2. Reporting

Under the existing requirements in 10 CFR 429.18(b), consumer (residential) furnace and boiler manufacturers must report the AFUE in percent and the input capacity in British thermal units per hour (''Btu/h'') in their certification reports. In addition, for cast-iron sectional boilers, manufacturers must include the type of ignition system for gas-fired steam and hot water boilers and a declaration of whether certification is based on linear interpolation or testing. For hot water boilers, manufacturers must also include a declaration that the manufacturer has incorporated the applicable design requirements. For multi-position furnaces, the AFUE reported for each basic model must be based on testing in the least-efficient configuration, but manufacturers may also optionally report and make representations of additional AFUE values based on testing in other configurations. 10 CFR 429.18(b).

In the August 2021 Certification NOPR, DOE proposed to modify some of the reporting requirements and add new requirements to better align with the existing standards and aid in determining which energy conservation standards apply to a given basic model for non-weatherized oil-fired consumer furnaces (including mobile home furnaces), electric consumer furnaces, and consumer boilers. 86 FR 43120, 43131. The specific changes are discussed in more detail in the following sections.

a. Standby Mode and Off Mode Energy Consumption

In addition to the applicable AFUE standards, DOE prescribes separate standards for standby mode and off mode power consumption (designated as $P_{W,SB}$ and $P_{W,OFF}$, respectively) for non-weatherized oil-fired furnaces in watts (including mobile home furnaces), electric furnaces, and consumer boilers. 10 CFR 430.32(e)(1)(iii) and (e)(2)(iii)(B). However, the reporting requirements for consumer furnaces and boilers at 10 CFR 429.18 do not include a requirement to certify the standby mode and off mode power consumption of non-weatherized oil-fired furnaces (including mobile home furnaces), electric furnaces, or consumer boilers.

Therefore, DOE proposed to require that manufacturers report values for $P_{W,SB}$ and $P_{W,OFF}$ for non-weatherized oil-fired furnaces (including mobile home furnaces), electric furnaces, and consumer boilers. 86 FR 43120, 43132.

Additionally, manufacturers of consumer furnaces and consumer boilers may use identical controls and electrical components across various models and/or product lines with different characteristics (*e.g.,* input capacity) and across AFUE levels. These differences in characteristics may prevent these basic models from being grouped as a single basic model, but because the different basic models have identical controls and electrical components affecting standby mode and off mode energy consumption, the standby mode or off mode test result would be expected to be the same for both models. Therefore, DOE proposed that if all electrical components that would impact the standby mode and off mode energy consumption are identical between multiple basic models, manufacturers can optionally test only one of the basic models and use test data from that basic model to rate the standby mode and off mode energy consumption for other basic models having identical controls and electrical components affecting standby mode and off mode energy consumption. 86 FR 43120, 43132.

Bradford White expressed support for the proposed standby mode and off mode reporting requirements for consumer furnaces and boilers. (Bradford White, No. 163, p. 1)

AHRI also supported the proposed standby mode and off mode energy consumption reporting requirements for furnaces. (AHRI, No. 166, p. 2) For boilers, however, AHRI asserted that there is no reason that compliance of standby mode and off mode power would require more than simply a declaration of compliance. AHRI stated that these modes consume very little power relative to the power consumed by the boiler as a whole, and that they are not given much consideration or weight by consumers. (*Id.*) AHRI also requested that DOE consider removing standby mode and off mode power consumption from the energy conservation standards for boilers. AHRI stated that indoor appliances do not have jacket losses measured because all heat lost to the envelope is still considered useful heat, and that any losses through standby mode and off mode should be considered only as useful heat for any indoor boiler. (*Id.*) AHRI asserted that reducing the standby mode and off mode energy conservation standards would only have adverse effects on the consumer and would result in major impacts to value added displays and safety controls. (*Id.*)

DOE notes that regardless of whether consumers consider standby mode and off mode power, these values are necessary for DOE to determine whether certified models comply with the standby mode and off mode standards for these products specified at 10 CFR 430.32(e)(1)(iii) and (e)(2)(iii)(B). Furthermore, requiring the values themselves rather than a statement of compliance is consistent with the approach used by DOE for other covered product types, and such information should be readily available, as it was needed to determination compliance with the applicable standard.

Accordingly, for the reasons discussed here and in the August 2021 Certification NOPR, in this final rule, DOE is adopting reporting requirements for standby mode and off mode power consumption for boilers and furnaces as proposed in the August 2021 Certification NOPR.

Regarding AHRI's comments in relation to the standby mode and off mode power consumption standards, consideration of any changes to energy conservation standards is outside of the scope of this rulemaking. However, the Department nonetheless points out that under 42 U.S.C. 6295(gg), EPCA mandates that DOE account for standby mode and off mode energy consumption for any final rule for energy conservation standards promulgated after July 1, 2010, so removal of those standards is not possible.

b. Type of Ignition System for Gas-Fired Consumer Boilers

The energy conservation standards for consumer boilers prohibit the use of constant-burning pilots for gas-fired hot water boilers and gas-fired steam boilers. 10 CFR 430.32(e)(2)(iii). Currently, manufacturers are required to certify the type of ignition system only for cast iron sectional gas-fired hot water and steam boilers. 10 CFR 429.18(b)(2)(ii). ''Cast iron sectional'' refers to the construction of the boiler heat exchanger, which is composed of cast iron sections. The prohibition of constant-burning pilot ignition systems is not limited to only consumer boilers with cast iron sectional heat exchangers, but rather is applicable to all gas-fired hot water boilers and gas-fired steam boilers, including those with heat exchangers made from other materials (*e.g.,* copper, aluminum, stainless steel). Therefore, DOE proposed in the August 2021 Certification NOPR to modify the reporting requirement for the type of ignition system such that the type of ignition system must be certified for all gas-fired hot water boilers and gas-fired steam boilers. 86 FR 43120, 43132. This change would allow DOE to confirm that the manufacturer-reported type of ignition system for a given basic model meets the design requirement for all types of gas-fired hot water boilers and gas-fired steam boilers.

In addition, 10 CFR 429.18(b)(3) requires that for hot water boilers, the manufacturer include in its certification report a declaration that the manufacturer has incorporated the applicable design requirements. As discussed, the standards for gas-fired steam boilers also include a design requirement that use of a constant-burning pilot ignition is not permitted. Therefore, DOE proposed to update the reporting requirements in 10 CFR 429.18(b)(3) to require that manufacturers of gas-fired steam boilers also include a declaration in the certification report that the basic model meets the design requirement criterion. *Id.*

In response to the August 2021 Certification NOPR, AHRI commented that the proposed expansion of reported ignition system type to include other gas-fired boilers would not be overly problematic. AHRI stated, however, that if DOE's intent was to ensure that standing pilots are not used, that including ignition systems in the declaration of compliance in 10 CFR 429.18(b)(3) would be a better solution. (AHRI, No. 166, p. 1)

DOE agrees with AHRI that including ignition systems in the declaration of compliance, as opposed to requiring manufacturers to specify the type of ignition system, is sufficient for determining compliance. As such, in this final rule, DOE is modifying the declaration of compliance in 10 CFR 429.18(b)(3) to include all boilers for which a design requirement applies. DOE is adding at 10 CFR 429.18(b)(3) a requirement that manufacturers of gas-fired boilers declare that the subject basic models do not incorporate a constant-burning pilot and that manufacturers of hot water boilers report whether the basic model is equipped with tankless domestic water heating coils (and if not, a declaration that the subject basic models include an automatic means for adjusting the water temperature). For gas-fired hot water boilers, both requirements apply, and thus, manufacturers will be required to separately declare compliance with both requirements. These changes will allow DOE to verify that boiler models subject to design requirements comply with those requirements. In addition, DOE is removing the existing requirement for

cast-iron sectional boilers to certify the ignition type, as it is duplicative with the declarations added by this final rule.

c. Rounding Requirements

In the August 2021 Certification NOPR, DOE proposed rounding requirements for the certification reporting requirements for standby mode and off mode energy consumption. Specifically, DOE proposed to require that values for standby mode and off mode energy consumption be rounded to the nearest 0.1 watts. 86 FR 43120, 43132.

In addition, the represented value of AFUE currently must be truncated to one-tenth of a percentage point. 10 CFR 429.18(a)(2)(vii). DOE proposed to modify this requirement to state that AFUE must be rounded to the nearest one-tenth of a percentage point. This change would treat consumer furnaces and boilers in a manner consistent with other types of covered products and equipment, for which represented values are generally required to be rounded rather than truncated. As discussed in the August 2021 Certification NOPR, this change could only increase the represented AFUE value, and as such, manufacturers would have an option of whether to re-rate the AFUE of existing models that would be impacted by this change. 86 FR 43120, 43132.

AHRI expressed support for the proposed AFUE rounding requirements. (AHRI, No. 166, p. 2) Bradford White likewise expressed support for the proposed AFUE, standby mode energy consumption, and off mode energy consumption rounding requirements, stating that these proposed requirements align with current industry standards. (Bradford White, No. 163, p. 2)

For the reasons discussed here and in the August 2021 Certification NOPR, in this final rule, DOE is adopting the rounding requirements as proposed in the August 2021 Certification NOPR.

3. Reporting Costs and Impacts

As discussed, in the August 2021 Certification NOPR, DOE proposed to align consumer furnace and boiler certification reporting requirements with the existing energy conservation standard requirements. 86 FR 43120, 43132.

For non-weatherized oil-fired consumer furnaces (including mobile home furnaces), electric consumer furnaces, and consumer boilers, the proposed changes would require manufacturers to report two additional values (*i.e.,* $P_{W,SB}$ and $P_{W,OFF}$) in their annual certification reports. For gas-fired hot water and gas-fired steam boiler models that are not cast-iron sectional boilers, the proposed changes would require additional reporting of the type of ignition system. However, as discussed previously, DOE has decided in this final rule not to require the reporting of the type of ignition system and is instead addressing the no-standing-pilot-light requirement through a required declaration.

Manufacturers of consumer furnaces and boilers are currently required to certify various items to DOE, depending on the product class and applicable standards, which can include AFUE, input rate, type of ignition system, and whether applicable design requirements are incorporated. Because manufacturers of these products are already submitting certification reports to DOE and should have readily available the information that DOE proposed to collect as part of the August 2021 Certification NOPR, DOE stated in the August 2021 Certification NOPR that it did not believe the revised reporting requirements would cause any appreciable change in reporting burden or hours as compared to what consumer furnace and boiler manufacturers do currently. Additionally, because the proposed AFUE rounding requirement would only increase represented AFUE values, manufacturers may choose to maintain current AFUE ratings; therefore, DOE tentatively determined that it did not expect any cost associated with this proposal. *Id.*

The only product class for which no certification reporting is currently required is electric steam boilers, as there is no AFUE standard or design requirement for this class. As proposed in the August 2021 Certification NOPR, there are now standby mode and off mode standards for electric steam boilers, so the addition of reporting requirements for $P_{W,SB}$ and $P_{W,OFF}$ would require new certification reporting for electric steam boilers, if manufacturers are not already doing so. *Id.*

DOE did not receive any comments regarding the certification reporting costs of the proposed amendments for consumer boilers and furnaces.

Based on the preceding discussion and the discussion in the August 2021 Certification NOPR, DOE makes a final determination that these amendments would not cause any measurable change in reporting burden or hours for manufacturers of consumer furnaces and boilers other than electric steam boilers. For electric steam boilers, the new reporting requirements established by this final rule will require new certification reporting for electric steam boiler manufacturers. Costs associated with the new reporting requirements for electric steam boilers are discussed in section IV.C.3 of this document.

E. Grid-Enabled Consumer Water Heaters

1. Scope of Applicability

As discussed in section I.B.5 of this document, DOE defines a ''grid-enabled water heater'' at 10 CFR 430.2, consistent with EPCA's definition at 42 U.S.C. 6295(e)(6)(A)(ii), to mean an electric resistance water heater that has a rated storage tank volume of more than 75 gallons, is manufactured on or after April 16, 2015, is equipped at the point of manufacture with an activation lock, and bears a permanent label applied by the manufacturer that is made of material not adversely affected by water, is attached by means of a non-water-soluble adhesive, and advises purchasers and end-users of the intended and appropriate use of the product as part of an electric thermal storage or demand response program.

2. Reporting

Currently, for grid-enabled consumer water heater basic models, manufacturers are required to report the uniform energy factor (''UEF''), the rated storage volume in gallons, the first-hour rating in gallons, the recovery efficiency in percent, a declaration that the model is a grid-enabled water heater, whether it is equipped at the point of manufacture with an activation lock, and whether it bears a permanent label applied by the manufacturer that advises purchasers and end-users of the intended and appropriate use of the product. 10 CFR 429.17(b)(2)(iii).

EPCA, as amended, requires manufacturers to report the quantity of grid-enabled water heaters that the manufacturer ships each year and requires DOE to keep the shipment data reported by manufacturers as confidential business information.[18] (42 U.S.C. 6295(e)(6)(C)(i)–(iii)) As stated in section I.B.5 of this document, the August 2015 Water Heater ECS Final Rule, which established definitions and energy conservation standards for grid-enabled water heaters, did not establish provisions to require the reporting of shipments by manufacturers. 80 FR 48004, 48009–48010. Therefore, DOE proposed in the August 2021 Certification NOPR to add reporting requirements to 10 CFR 429.17 that would require manufacturers to report

[18] EPCA also requires that utilities and other demand response and thermal storage program operators report annually the quantity of grid-enabled water heaters activated for their programs. (42 U.S.C. 6295(e)(6)(C)(ii))

the total number of grid-enabled water heaters shipped each year for sale in the U.S., along with the calendar year that the shipments cover, in accordance with the EPCA requirement. 86 FR 43120, 43133. DOE also proposed to state explicitly that the annual shipments of grid-enabled water heaters reported by manufacturers will be treated as confidential business information by the Department. *Id.* Because the annual shipments of grid-enabled water heaters would be treated differently than other water heater reporting requirements (*i.e.,* the shipments would be reported on an annual basis rather than ongoing based on model availability; and the reported shipments would be treated as confidential business information), DOE proposed that the annual shipments be reported separately from the other certification reporting requirements for water heaters in 10 CFR 429.17(b). *Id.*

AHRI and Bradford White expressed support for the proposed reporting requirement for the number of annual shipments of grid-enabled consumer water heaters, as well as the proposal that this information be reported separately from the information that is currently required under 10 CFR 429.17(b). (AHRI, No. 166, p. 2; Bradford White, No. 163, p. 1) The Joint Commenters commented that EPCA directs DOE to require reporting of both shipment and activation numbers for grid-enabled water heaters, and they urged DOE to begin requiring utilities and other demand response and thermal storage program operators to begin reporting the annual activation numbers. (Joint Commenters, No. 165, pp. 1–2)

Regarding the comment from the Joint Commenters, DOE notes that it already collects the quantity of activations from utilities and other demand response and thermal storage program operators, as required by EPCA, through the Energy Information Administration's forms EIA–861 and EIA–861S.

For the reasons discussed here and in the August 2021 Certification NOPR, in this final rule, DOE is adopting the reporting requirements for grid-enabled water heaters as proposed in the August 2021 Certification NOPR.

3. Reporting Costs and Impacts

As discussed in the August 2021 Certification NOPR, the addition of reporting requirements for annual shipments of grid-enabled consumer water heaters would newly require manufacturers to report this information. 86 FR 43120, 43132.

DOE did not receive any comments regarding the certification reporting costs of the proposed amendments for grid-enabled water heaters.

Costs associated with these new reporting requirements for grid-enabled water heaters are discussed in section IV.C.3 of this document.

F. Dishwashers

1. Scope of Applicability

DOE defines dishwashers as cabinet-like appliances which with the aid of water and detergent, wash, rinse, and dries (when a drying process is included) dishware, glassware, eating utensils, and most cooking utensils by chemical, mechanical and/or electrical means and discharge to the plumbing drainage system. 10 CFR 430.2.

2. Reporting

Under the existing requirements in 10 CFR 429.19(b)(2), a certification report must include the following public product-specific information: the estimated annual energy use in kilowatt hours per year (kWh/yr) and the water consumption in gallons per cycle. In addition, a certification report must include the following additional product-specific information: the capacity in number of place settings as specified in industry standard ANSI/Association of Home Appliance Manufacturers (''AHAM'') DW–1–2010 (''ANSI/AHAM DW–1–2010''); presence of a soil sensor (if yes, the number of cycles required to reach calibration); the water inlet temperature used for testing in degrees Fahrenheit (°F); the cycle selected for energy testing and whether that cycle is soil-sensing; the options selected for the energy test; and presence of a built-in water softening system (if yes, the energy use in kilowatt-hours and the water use in gallons required for each regeneration of the water softening system, the number of regeneration cycles per year, and data and calculations used to derive these values). 10 CFR 429.19(b)(3).

In conducting testing according to DOE's test procedure, section 2.10 of appendix C1 specifies using Cascade with the Grease Fighting Power of Dawn powder as the detergent formulation, at half the quantity specified according to Section 4.1 of ANSI/AHAM DW–1–2010. During AHAM task group meetings in 2020 to establish an updated version of the industry standard, in which DOE participated, AHAM informed DOE that Cascade with the Grease Fighting Power of Dawn has been discontinued and has been replaced with Cascade Complete. AHAM has updated its industry standard to specify the use of Cascade Complete for testing.[19] Given that the currently specified detergent is no longer available on the market, DOE expects that manufacturers may need to (or have already had to) switch to the new detergent formulation to conduct testing according to appendix C1. On December 22, 2021, DOE proposed amendments to the test procedure for dishwashers, including an amendment to the detergent specifications for testing. 86 FR 72738, 72753.

DOE seeks to ensure that any assessment or enforcement testing conducted pursuant to 10 CFR 429.104 and 10 CFR 429.110, respectively, would be performed using the same detergent used by the manufacturer for certifying compliance with the applicable energy conservation standard. In the August 2021 Certification NOPR, DOE proposed to require that manufacturers indicate in the certification report whether Cascade Complete powder was used as the detergent formulation in lieu of Cascade with the Grease Fighting Power of Dawn. 86 FR 43120, 43133. DOE proposed to add this requirement to the list of additional product-specific information specified at 10 CFR 429.19(b)(3). *Id.*

DOE also proposed to reorganize the requirements specified at 10 CFR 429.19(b)(3) as a numbered list for easier readability. *Id.* In its proposed reorganization of these requirements, DOE had proposed to maintain the reported capacity (in number of place settings) as a non-public certification requirement under 10 CFR 429.19(b)(3). However, DOE currently includes the reported capacity among the publicly available information in the CCD,[20] as DOE determined that this information is useful for differentiating among models listed within the database and determining the applicable product class in 10 CFR 430.32(f)(1). In this final rule, DOE moves this certification requirement to the public requirements specified at 10 CFR 429.19(b)(2) to be consistent with how this reported information is currently presented to the public. DOE is adopting the other reorganized requirements as proposed.

AHAM commented in support of the proposed dishwasher certification requirement, stating that this requirement will ensure that any assessment and enforcement testing can be accurate and conducted with the same detergent used by the

[19] *See* AHAM DW–1–2020 and AHAM DW–2–2020, available at *www.aham.org.*

[20] The Compliance Certification Database for dishwashers is available at *www.regulations.doe.gov/certification-data/CCMS-4-Dishwashers.html.*

manufacturer when determining compliance. (AHAM, No. 167, p. 2)

For the reasons discussed here and in the August 2021 Certification NOPR, in this final rule, DOE is adopting the amended reporting requirements for dishwashers as proposed in the August 2021 Certification NOPR.

3. Reporting Costs and Impacts

In the August 2021 Certification NOPR, DOE had tentatively determined that the proposed additional reporting requirement would not impose additional costs for manufacturers because manufacturers of dishwashers are already submitting certification reports to DOE and should have readily available the information that DOE would be requiring (*i.e.,* whether a dishwasher model was tested using Cascade Complete powder as the detergent formulation in lieu of Cascade with the Grease Fighting Power of Dawn). DOE stated that it did not believe the revised reporting requirements would cause any measurable change in reporting burden or hours as compared to what dishwasher manufacturers are currently doing today. 86 FR 43120, 43134.

DOE did not receive any comments on the certification and reporting costs associated with the proposed reporting requirement for dishwashers. In this final rule, DOE makes a final determination that these amendments would not cause any measurable change in reporting burden or hours for dishwasher manufacturers.

G. Commercial Clothes Washers

1. Scope of Applicability

DOE defines ''commercial clothes washer'' to mean a soft-mounted front-loading or soft-mounted top-loading clothes washer that: (1) has a clothes container compartment that for horizontal-axis clothes washers is not more than 3.5 cubic feet (''cu ft''), and for vertical-axis clothes washers is not more than 4.0 cu ft; and (2) is designed for use in applications in which the occupants of more than one household will be using the clothes washer, such as multi-family housing common areas and coin laundries; or other commercial applications. 10 CFR 431.152; 42 U.S.C. 6311(21).

2. Reporting

Under the existing requirements in 10 CFR 429.46(b), a CCW certification report must include the following public information: the modified energy factor (MEF_{J2}) in cu ft/kWh/cycle and the integrated water factor (''IWF'') in gal/cu ft/cycle. 10 CFR 429.46(b)(2)(ii). DOE also maintains reporting requirements at 10 CFR 429.46(b)(2)(i) for models tested using appendix J1, which is no longer used as the basis for demonstrating compliance with energy conservation standards. Since January 1, 2018, CCW basic models are subject to an energy conservation standard using the MEF_{J2} metric, and the water efficiency standard using IWF, both of which can only be measured using appendix J2, making the reporting requirements based on appendix J1 obsolete.[21]

Accordingly, DOE proposed in the August 2021 Certification NOPR to remove the reporting requirements currently specified at 10 CFR 429.46(b)(2)(i) for models tested using appendix J1. 86 FR 43120, 43134. DOE also proposed to update the term ''water factor'' in the test sampling plan for CCW at 10 CFR 429.46(a)(2)(i) to ''integrated water factor'' to match the current metric used as the basis for standards. *Id.*

AHAM commented in support of the removal of the outdated appendix J1 requirements. (AHAM, No. 167, p. 2)

For the reasons discussed here and in the August 2021 Certification NOPR, in this final rule, DOE is removing the appendix J1 reporting requirements as proposed in the August 2021 Certification NOPR.

In addition, DOE proposed to amend the CCW certification reporting requirements by adding to the list of reported values the clothes container capacity (in cubic feet), the type of loading (top-loading or front-loading), and the corrected remaining moisture content (''RMC'') value (expressed as a percentage). 86 FR 43120, 43134. DOE also proposed rounding instructions for each newly reported value. *Id.*

In general, AHAM requested DOE provide sufficient lead-time for any adopted amendments to the reporting requirements. (AHAM, No. 167, p. 2) As discussed, compliance with the amended reporting requirements is not required until 210 days after publication of this final rule. The specific reporting requirements are discussed in the following paragraphs.

a. Clothes Container Capacity

DOE's definition of ''commercial clothes washer'' at 10 CFR 431.152, which is consistent with the EPCA definition (*see* 42 U.S.C. 6311(21)), incorporates clothes container capacity, among other characteristics. Specifically, equipment meeting the definition of a CCW has a clothes container compartment that for horizontal-axis clothes washers is not more than 3.5 cubic feet, and for vertical-axis clothes washers is not more than 4.0 cubic feet (among other criteria). 10 CFR 431.152. Clothes container capacity is also a key parameter in the calculation of MEF_{J2} and IWF, in that capacity is used to represent the per-cycle energy and water use on per-cubic-foot of capacity basis. To verify whether the information provided is consistent with the certifier's statement of compliance with standards, DOE proposed to amend 10 CFR 429.46(b)(2) to add clothes container capacity (in cubic feet) to the information required to be included in the certification report. 86 FR 43120, 43134.

DOE also proposed accompanying sampling provisions for determining the reported values for capacity. *Id.* Specifically, DOE proposed to add new paragraph (a)(3) in 10 CFR 429.46, which specifies that the reported capacity of a basic model shall be the mean of the measured clothes container capacity, ''C'', of all tested units of the basic model. *Id.* This new paragraph would parallel the existing requirement for RCWs in 10 CFR 429.20(a)(3).

AHAM stated that it did not oppose the proposal to require reporting clothes container capacity given that capacity is an element of determining whether clothes washers meet the definition of a ''commercial clothes washer'' and is important to the calculation of MEF and IWF. (AHAM, No. 167, pp. 2–3)

For the reasons discussed here and in the August 2021 Certification NOPR, in this final rule, DOE is adopting the amendments regarding container capacity as proposed in the August 2021 Certification NOPR.

b. Axis of Loading

DOE has established equipment classes for CCWs defined by axis of loading (*i.e.,* top-loading and front-loading). Separate energy conservation standards apply to each class. 10 CFR 431.156. As such, the axis of loading is integral in determining the energy conservation standard that applies to each basic model. In the August 2021 Certification NOPR, DOE proposed to amend 10 CFR 429.46(b)(2) to add the type of loading (top-loading or front-loading) to the information required to be included in the certification report. 86 FR 43120, 43134.

AHAM stated that it did not oppose the proposal to require reporting of loading axis. (AHAM, No. 167, p. 3)

[21] DOE removed appendix J1 and all references to appendix J1 in 10 CFR parts 429, 430, and 431 in the June 2022 RCW/CCW TP Final Rule. 87 FR 33316, 33319, 33363.

For the reasons discussed here and in the August 2021 Certification NOPR, in this final rule, DOE is adopting this amendment as proposed in the August 2021 Certification NOPR.

c. Remaining Moisture Content

DOE specifies product-specific enforcement provisions for ''clothes washers'', which includes both RCWs and CCWs. 10 CFR 429.134(c). Specifically, 10 CFR 429.134(c)(1), as amended by the June 2022 RCW/CCW TP Final Rule, specifies provisions for the determination of remaining moisture content (''RMC'').[22] The provisions at 10 CFR 429.134(c)(1)(i) address testing conducted to the new appendix J, and those at 10 CFR 429.134(c)(1)(ii) address testing conducted to appendix J2. In both cases, these provisions address anomalous RMC results that are not representative of a basic model's performance, as well as differences in RMC values that may result from DOE using a different test cloth lot than was used by the manufacturer for testing and certifying the basic model. These provisions describe DOE's approach for determining the final RMC value under each possible testing outcome: when the measured RMC value of a tested unit is equal to or lower than the certified RMC value of the basic model; when the measured RMC value of a tested unit is higher than the certified RMC value of the basic model but the difference between the measured and certified RMC values would not affect the unit's compliance with the applicable standards; and when the measured RMC value of a tested unit is higher than the certified RMC value of the basic model and the difference between the measured and certified RMC values would affect the unit's compliance with the applicable standards. These provisions are further differentiated according to whether DOE used the same test cloth lot or a different test cloth lot than was used by the manufacturer for testing and certifying the basic model.[23]

The application of this product-specific enforcement provision for clothes washers requires a certified value of ''corrected'' RMC[24] for each basic model. Therefore, DOE proposed to amend 10 CFR 429.46(b)(2) to add the corrected RMC value (expressed as a percentage) to the information required to be included in the certification report. 86 FR 43120, 43134.

DOE also proposed accompanying sampling provisions for determining the reported values for corrected RMC. *Id.* Specifically, DOE proposed to add new paragraph (a)(4) in 10 CFR 429.46, which specifies that the reported value of corrected RMC of a basic model shall be the mean of the final RMC value measured for all tested units of the basic model. *Id.* This new paragraph would parallel the existing requirements for RCWs in 10 CFR 429.20(a)(4).

AHAM stated that it did not oppose the proposal to require reporting corrected remaining moisture content and the proposed sampling provisions. (AHAM, No. 167, p. 3)

For the reasons discussed here and in the August 2021 Certification NOPR, in this final rule, DOE is adopting these amendments as proposed in the August 2021 Certification NOPR.

d. Rounding Instructions

In the August 2021 Certification NOPR, DOE proposed to specify at new § 429.46(c) that clothes container capacity must be rounded to the nearest 0.1 cubic feet (''cu ft''), and that corrected RMC must be rounded to the nearest 0.1 percentage point. 86 FR 43120, 43134. These rounding instructions are consistent with the existing rounding instructions for RCWs specified at 10 CFR 429.20(c).

AHAM stated that it did not oppose the proposed rounding requirements. (AHAM, No. 167, p. 3)

For the reasons discussed here and in the August 2021 Certification NOPR, in this final rule, DOE is adopting the rounding instructions as proposed in the August 2021 Certification NOPR.

3. Reporting Costs and Impacts

In the August 2021 Certification NOPR, DOE proposed adding three additional reported values for CCWs (*i.e.,* the clothes container capacity, the type of loading, and the corrected RMC value). 86 FR 43120, 43135. Currently, manufacturers report two values, as described in the previous section.

In the August 2021 Certification NOPR, DOE had tentatively determined that the amendment would not impose additional costs for manufacturers because manufacturers of CCWs are already submitting certification reports to DOE and should have readily available the information that DOE is proposing to collect as part of this rulemaking. In particular, the clothes container capacity and corrected RMC values are already measured as part of the test procedure and are required for calculating the MEF_{J2} metric under appendix J2.[25] DOE stated in the August 2021 Certification NOPR that it did not believe the revised reporting requirements would cause any measurable change in reporting burden or hours as compared to what CCW manufacturers are currently doing today. *Id.*

DOE did not receive any comments on the certification and reporting costs associated with the proposed reporting requirements for CCWs. In this final rule, DOE makes a final determination that these amendments to the reporting requirements for CCW would not cause any measurable change in reporting burden or hours for CCW manufacturers.

H. Battery Chargers

1. Scope of Applicability

This final rule applies to battery chargers, which DOE defines as a device that charges batteries for consumer products, including battery chargers embedded in other consumer products. 10 CFR 430.2.

2. Reporting

Under the existing requirements in 10 CFR 429.39(b), a certification report must include the following public product-specific information for all battery chargers other than uninterruptable power supplies: nameplate battery voltage of the test battery in volts (V), nameplate battery charge capacity of the test battery in ampere-hours (Ah), nameplate battery energy capacity of the test battery in watt-hours (Wh), maintenance mode power (P_m), standby mode power (P_{sb}), off mode power (P_{off}), battery discharge energy (E_{batt}), 24-hour energy consumption (E_{24}), duration of the charge and maintenance mode test (t_{cd}), and unit energy consumption (UEC). 10 CFR 429.39(b)(2).

In addition, a certification report must include the following additional product-specific information for all battery chargers other than uninterruptible power supplies: the manufacturer and model of the test battery, and the manufacturer and model, when applicable, of the external power supply. 10 CFR 429.39(b)(3).

Certification reports must also include the following product-specific information for all uninterruptible

[22] The RMC measurement is used to determine the per-cycle energy consumption for removal of moisture from the test load; *i.e.,* the ''drying energy'' portion of the MEF_{J2} calculation in appendix J2 and the AEER calculation in new appendix J.

[23] *See* 87 FR 33316, 33369–33371 for additional discussion of the amendments adopted.

[24] ''Corrected'' RMC refers to the final RMC value obtained in Appendix J2 after applying specified correction factors (based on the lot of test cloth used for testing) to the ''uncorrected'' RMC value.

[25] Although not specifically mentioned in the August 2021 Certification NOPR, the clothes container capacity and corrected RMC values will also already be measured as part of the new appendix J test procedure, as required for calculating AEER or EER, as applicable to any future amended standards for CCWs.

power supplies: supported input dependency mode(s); active power in watts (W); apparent power in volt-amperes (VA); rated input and output voltages in volts (V); efficiencies at 25 percent, 50 percent, 75 percent and 100 percent of the reference test load; and average load adjusted efficiency of the lowest and highest input dependency modes. 10 CFR 429.39(b)(4).

DOE notes that 10 CFR 429.12(a) states that basic models of covered products require annual filings on or before the dates provided in 10 CFR 429.12(d), but paragraph (d) does not specifically list an annual filing date for battery chargers. In light of this omission, DOE proposed in the August 2021 Certification NOPR to explicitly specify in 10 CFR 429.12(d) that battery chargers be recertified annually on or before September 1. 86 FR 43120, 43135.

DOE received one comment regarding the proposed annual filing date for battery chargers. AHAM commented that the Appliance Standards and Rulemaking Federal Advisory Committee (''ASRAC'') recommended that DOE eliminate annual reporting requirements,[26] and only require that a model be certified whenever it is newly introduced, discontinued, or changed in a way that alters energy use. (AHAM, No. 167, p. 3–4) AHAM supported ASRAC's recommended removal of annual reporting requirements and opposed the addition of an annual reporting requirement for battery chargers. (*Id.*)

DOE is maintaining the annual reporting requirement for battery chargers with the amendments adopted in this final rule. The annual reporting requirement is consistent with the requirements for all other DOE covered products. For the reasons discussed in this final rule and in the August 2021 Certification NOPR, in this final rule, DOE is adopting the amendments to the reporting requirements for battery chargers as proposed.

3. Reporting Costs and Impacts

In the August 2021 Certification NOPR, DOE proposed no changes to the reported information required for battery chargers. DOE only proposed to specify the annual date by which manufacturers must submit annual certification filings to DOE. 86 FR 43120, 43135. DOE had tentatively determined that the amendment would not impose additional costs for manufacturers because manufacturers of battery chargers are already submitting certification reports to DOE. The requirement adopted in this final rule specifies that the annual reporting must be submitted on or before September 1. Specifying the annual date by which reports must be filed will not change the content or frequency of the report, and therefore DOE has determined that the amendment to the reporting requirements for battery chargers would not cause any measurable change in reporting burden or hours for CCW manufacturers.

I. Dedicated-Purpose Pool Pumps

1. Scope of Applicability

This final rule applies to DPPPs, which by DOE's definition includes self-priming pool filter pumps, non-self-priming pool filter pumps, waterfall pumps, pressure cleaner booster pumps, integral sand-filter pool pumps, integral-cartridge filter pool pumps, storable electric spa pumps, and rigid electric spa pumps. 10 CFR 431.462.

2. Reporting

Certification report requirements are specified in 10 CFR 429.59(b)(2)(iv) and (b)(3)(iv) for DPPPs subject to the test methods prescribed in § 431.464(b). However, in 10 CFR 429.12, certification is only required for covered equipment subject to an applicable energy conservation standard. Certain DPPPs that are subject to the test method, specifically waterfall pumps and polyphase self-priming pool filter pumps, are not subject to an energy conservation standard. Therefore, in the August 2021 Certification NOPR, DOE proposed to clarify the reporting requirements by removing the language in 10 CFR 429.59(b)(2)(iv) and (b)(3)(iv) that references the test method (as well as a reference to waterfall pumps). 86 FR 43120, 43135.

In addition, DOE proposed to amend the same provisions to specify that they do not apply to integral cartridge-filter and sand filter pool pumps. *Id.* Rather, because those pumps are subject to design requirements, they have separate reporting requirements in 10 CFR 429.59(b)(2)(v).

DOE received one comment in response to the proposal to clarify the certification requirement for certain models of DPPPs. NSF suggested revising the reference to the industry standard incorporated by reference. NSF stated that the reporting requirement should reference NSF/ANSI/CAN 50–2020, ''Equipment and Chemicals for Swimming Pools, Spas, Hot Tubs and Other Recreational Water Facilities'' and the correct Annex reference is now Normative Annex 3, Section N–3.3. (NSF, No. 168, p.1) DOE notes that this is the more recent version of the material incorporated by reference at 10 CFR 431.463 (NSF/ANSI 50–2015, ''Equipment for Swimming Pools, Spas, Hot Tubs and Other Recreational Water Facilities'', Annex C—Test methods for the evaluation of centrifugal pumps,'' Section C.3, ''self-priming capability''). Since this rulemaking is limited to certification, DOE is not incorporating the newer material by reference as part of this final rule. DOE will consider this new standard during the next rulemaking process for DPPPs.

DOE did not receive any other comments on its proposal to clarify the certification requirements for certain models of DPPPs and is finalizing them as proposed in the August 2021 Certification NOPR.

3. Reporting Costs and Impacts

In the August 2021 Certification NOPR, DOE proposed to clarify the existing certification requirements for DPPPs. 86 FR 43120, 43135. DOE did not receive any comments regarding the impact of the proposed amendment. DOE has determined that the amendment would not impose additional costs or burden for manufacturers.

J. Revised Certification Templates

DOE will revise the reporting templates 180 days prior to the compliance date for the amended certification requirements adopted in this rule. The specific templates that must be used for certifying compliance of covered products and equipment to DOE are available for download at *www.regulations.doe.gov/ccms/templates.*

K. Effective and Compliance Dates

The effective date for the adopted reporting requirement amendments will be 30 days after publication of this final rule in the **Federal Register**. Submission of the data specified by the amended reporting provisions will be required for the applicable certification reports that are required to be submitted under 10 CFR 429.12, beginning 210 days following publication of this final rule in the **Federal Register**, but certification reports may be submitted in accordance with these amended requirements prior to the compliance date if the manufacturer elects to do so.

[26] Strawman ASRAC Recommendation on Reducing Reporting Burden (available at: *www.regulations.gov/document/EERE-2013-BT-NOC-0005-0103*).

IV. Procedural Issues and Regulatory Review

A. Review Under Executive Orders 12866 and 13563

Executive Order (''E.O.'') 12866, ''Regulatory Planning and Review,'' as supplemented and reaffirmed by E.O. 13563, ''Improving Regulation and Regulatory Review, 76 FR 3821 (Jan. 21, 2011), requires agencies, to the extent permitted by law, to (1) propose or adopt a regulation only upon a reasoned determination that its benefits justify its costs (recognizing that some benefits and costs are difficult to quantify); (2) tailor regulations to impose the least burden on society, consistent with obtaining regulatory objectives, taking into account, among other things, and to the extent practicable, the costs of cumulative regulations; (3) select, in choosing among alternative regulatory approaches, those approaches that maximize net benefits (including potential economic, environmental, public health and safety, and other advantages; distributive impacts; and equity); (4) to the extent feasible, specify performance objectives, rather than specifying the behavior or manner of compliance that regulated entities must adopt; and (5) identify and assess available alternatives to direct regulation, including providing economic incentives to encourage the desired behavior, such as user fees or marketable permits, or providing information upon which choices can be made by the public. DOE emphasizes as well that E.O. 13563 requires agencies to use the best available techniques to quantify anticipated present and future benefits and costs as accurately as possible. In its guidance, the Office of Information and Regulatory Affairs (''OIRA'') in the Office of Management and Budget (''OMB'') has emphasized that such techniques may include identifying changing future compliance costs that might result from technological innovation or anticipated behavioral changes. For the reasons stated in the preamble, this final regulatory action is consistent with these principles.

Section 6(a) of E.O. 12866 also requires agencies to submit ''significant regulatory actions'' to OIRA for review. OIRA has determined that this final regulatory action does not constitute a ''significant regulatory action'' under section 3(f) of E.O. 12866. Accordingly, this action was not submitted to OIRA for review under E.O. 12866.

B. Review Under the Regulatory Flexibility Act

The Regulatory Flexibility Act (5 U.S.C. 601 *et seq.*) requires preparation of a final regulatory flexibility analysis (''FRFA'') for any final rule where the agency was first required by law to publish a proposed rule for public comment, unless the agency certifies that the rule, if promulgated, will not have a significant economic impact on a substantial number of small entities. As required by Executive Order 13272, ''Proper Consideration of Small Entities in Agency Rulemaking,'' 67 FR 53461 (August 16, 2002), DOE published procedures and policies on February 19, 2003, to ensure that the potential impacts of its rules on small entities are properly considered during the DOE rulemaking process. 68 FR 7990. DOE has made its procedures and policies available on the Office of the General Counsel's website: *www.energy.gov/gc/office-general-counsel.*

DOE has concluded that the removal of outdated reporting requirements and the addition of new reporting requirements as adopted in this final rule will not impose additional costs for manufacturers of CFLKs, GSILs and IRLs, ceiling fans, consumer furnaces and boilers (except electric steam boilers), dishwashers, CCWs, battery chargers, and DPPPs for the reasons discussed in section III of this document. For these products and equipment, DOE has determined that the amendments will not impose additional costs for manufacturers because manufacturers are already submitting certification reports to DOE and should have readily available the information that DOE is requiring as part of this rulemaking, and for DPPPs, the proposed amendments clarify the existing reporting requirements. Consequently, for these types of covered products and equipment, the changes in this final rule are not expected to have a significant economic impact on related entities regardless of size.

However, for electric steam boilers, no certification is currently required. This final rule is amending 10 CFR 429.18 to include a requirement to certify the standby mode and off mode energy consumption for electric steam boilers. This amendment aligns the certification requirements with the existing energy conservation standard requirements 10 CFR 430.32(e)(1)(iii) introductory text and (e)(2)(iii)(B). For electric steam boiler manufacturers that are not already certifying, the new certification requirements would result in additional paperwork costs. Likewise, for grid-enabled water heaters, this final rule is adding reporting requirements to align with the requirements of EPCA. EPCA, as amended, requires manufacturers to report the quantity of grid-enabled water heaters that the manufacturer ships each year and requires DOE to keep the shipment data reported by manufacturers as confidential business information. (42 U.S.C. 6295(e)(6)(C)(i)–(iii)) Therefore, grid-enabled water heater manufacturers will incur additional paperwork costs.

The Small Business Administration (''SBA'') considers a business entity to be a small business, if, together with its affiliates, it employs less than a threshold number of workers specified in 13 CFR part 121. The size standards and codes are established by the 2017 North American Industry Classification System (''NAICS'').

Electric steam boiler manufacturers are classified under NAICS code 333414, ''Heating Equipment (except Warm Air Furnaces) Manufacturing.'' The SBA sets a threshold of 500 employees or fewer for an entity to be considered as a small business in this category. DOE used available public information to identify potential small manufacturers. DOE reviewed manufacturer literature to create a list of companies that import or otherwise manufacture the electric steam boilers covered by this rulemaking. Using these sources, DOE identified five manufacturers of electric steam boilers. Three of these five manufacturers are small businesses. DOE estimates that the increased certification burden will result in 35 hours per manufacturer to develop the required certification reports. Therefore, based on a fully burdened labor rate of $100 per hour, the estimated total annual cost to manufacturers would be $3,500 per manufacturer.[27] Using subscription-based market research tools (*e.g.,* Dun & Bradstreet company reports),[28] DOE developed annual revenue estimates for the three small businesses that manufacture electric steam boilers. The estimated annual revenue for the three small businesses ranges from $0.5 million to $24.1 million. Therefore, this additional certification cost of $3,500 per manufacturer represents less than 1 percent of each identified manufacturer's annual revenue.

[27] The estimates of 35 hours per response and $100 per hour fully burdened labor rate are based on the collection of information estimates for consumer products and commercial/industrial equipment subject to energy or water conservation standards. *See* 82 FR 57240 (Dec. 4, 2017).

[28] Dun & Bradstreet Hoovers subscription login is accessible at: *app.dnbhoovers.com/* (Last accessed May 9, 2022).

Grid-enabled water heater manufacturers are classified under NAICS code 335220, ''Major Household Appliance Manufacturing.'' The SBA sets a threshold of 1,500 employees or fewer for an entity to be considered as a small business in this category. DOE used available public information to identify potential small manufacturers. DOE accessed the CCD [29] and the certified product directory of AHRI,[30] and DOE also reviewed manufacturer literature. Using these sources, DOE identified four manufacturers of grid-enabled water heaters. The four manufacturers exceed the SBA threshold to be considered a small business. Thus, DOE did not identify any small business manufacturers of grid-enabled water heaters.

DOE reviewed this final rule under the provisions of the Regulatory Flexibility Act and the policies and procedures published on February 19, 2003. On the basis of the foregoing, DOE concludes that the impacts of the amendments to DOE's certification regulations adopted in this final rule will not have a ''significant economic impact on a substantial number of small entities.'' Accordingly, DOE has not prepared an FRFA for this final rule. DOE will transmit this certification of no significant impact on a substantial number of small entities and supporting statement of factual basis to the Chief Counsel for Advocacy of the Small Business Administration for review under 5 U.S.C. 605(b).

C. Review Under the Paperwork Reduction Act of 1995

Manufacturers of CFLKs, GSILs, IRLs, ceiling fans, consumer furnaces and boilers (except for electric steam boilers), consumer water heaters, dishwashers, CCWs, battery chargers, and DPPPs must certify to DOE that their products comply with any applicable energy conservation standards. To certify compliance, manufacturers must first obtain test data for their products according to the DOE test procedures, including any amendments adopted for those test procedures. DOE's current reporting requirements are approved under OMB Control Number 1910–1400.

1. Description of the Requirements

DOE is amending the reporting requirements for CFLKs, GSILs, IRLs, ceiling fans, consumer furnaces and boilers, consumer water heaters, dishwashers, CCWs, battery chargers, and DPPPs, and has sent a revised information collection request to OMB under the existing Control Number 1910–1400. The revisions will just reflect the changes proposed in this rulemaking as an amendment to the existing information collection.

2. Method of Collection

DOE is requiring that respondents submit electronic forms using DOE's online CCMS. DOE's CCMS is publicly accessible at *www.regulations.doe.gov/ccms,* and includes instructions for users, registration forms, and the product-specific reporting templates required for use when submitting information to CCMS.

3. Data

The following are DOE estimates of the total annual reporting and recordkeeping burden imposed on manufacturers of CFLKs, GSILs, IRLs, ceiling fans, consumer furnaces and boilers, consumer water heaters, dishwashers, CCWs, battery chargers, and DPPPs subject to the amended certification reporting requirements adopted in this final rule. These estimates take into account the time necessary to develop any additional testing documentation, maintain any additional documentation supporting the development of the certified rating for each basic model, complete any additional certification, and submit any additional required documents to DOE electronically.

DOE has determined that these amendments will not impose additional costs for manufacturers of CFLKs, GSILs, IRLs, ceiling fans, dishwashers, CCWs, battery chargers, most consumer furnaces and boilers, and most consumer water heaters, because manufacturers of these products or equipment are already submitting certification reports to DOE and should have readily available the information that DOE is requiring as part of this rulemaking. DOE has also determined that these amendments will not impose additional costs for manufacturers of DPPPs because the adopted language only clarifies the existing certification requirements.

DOE's amendments for the reporting requirements for electric steam boilers will require new certification reporting for electric steam boilers manufacturers and importers. DOE estimates there are five manufacturers of electric steam boilers that would have to submit annual certification reports to DOE for those products based on the adopted reporting requirements. The following section estimates the burden for these five electric steam boiler manufacturers.

OMB Control Number: 1910–1400.

Form Number: DOE F 220.7.

Type of Review: Regular submission.

Affected Public: Domestic manufacturers and importers of electric steam boilers covered by this rulemaking.

Estimated Number of Respondents: 5.

Estimated Time per Response: Certification reports, 35 hours.

Estimated Total Annual Burden Hours: 175.

Estimated Total Annual Cost to the Manufacturers: $17,500 in recordkeeping/reporting costs.

For grid-enabled consumer water heaters, DOE is adding reporting requirements to 10 CFR 429.17 that will require manufacturers and importers to report the total number of grid-enabled water heaters shipped each year in accordance with the requirement in EPCA. The following are DOE estimates of the total annual reporting and recordkeeping burden imposed on manufacturers of grid-enabled consumer water heaters subject to the reporting provisions in this final rule. These estimates take into account the time necessary to develop testing documentation, maintain all the documentation supporting the development of the certified rating for each basic model, complete the certification, and submit all required documents to DOE electronically.

OMB Control Number: 1910–1400.

Form Number: DOE F 220.92.

Type of Review: Regular submission.

Affected Public: Manufacturers and importers of grid-enabled consumer water heaters covered by this rulemaking.

Estimated Number of Respondents: 4.

Estimated Time per Response: Certification reports, 35 hours.

Estimated Total Annual Burden Hours: 140.

Estimated Total Annual Cost to the Manufacturers: $14,000 in recordkeeping/reporting costs.

4. Conclusion

DOE has concluded that the removal of outdated reporting requirements and the addition of reporting requirements as adopted in this final rule will not impose additional costs for manufacturers of CFLKs, GSILs, IRLs, ceiling fans, most consumer furnaces and boilers, dishwashers, CCWs, battery chargers, and DPPPs (see sections III.A.3, III.B.3, III.C.3, III.D.3, III.F.3, III.G.3, III.H.3, and III.I.3 of this document for a more complete discussion). Furthermore, DOE has concluded that there are five electric

[29] U.S. Department of Energy CCMS (Available at: *www.regulations.doe.gov/ccms*).

[30] AHRI Directory of Certified Product Performance (Available at: *www.ahridirectory.org/Search/SearchHome*).

steam boiler manufacturers and four consumer water heater manufacturers that will have to submit new annual certification reports to DOE for those products. For all other manufacturers of covered products or equipment described in this final rule, the public reporting burden for certification remains unchanged.

Notwithstanding any other provision of the law, no person is required to respond to, nor shall any person be subject to a penalty for failure to comply with, a collection of information subject to the requirements of the PRA, unless that collection of information displays a currently valid OMB Control Number.

D. Review Under the National Environmental Policy Act of 1969

In this final rule, DOE establishes amended certification and reporting requirements for CFLKs, GSILs and IRLs, ceiling fans, consumer furnaces and boilers (except electric steam boilers), dishwashers, CCWs, battery chargers, and DPPPs. DOE has determined that this rule falls into a class of actions that are categorically excluded from review under the National Environmental Policy Act of 1969 (42 U.S.C. 4321 *et seq.*) and DOE's implementing regulations at 10 CFR part 1021. Specifically, DOE has determined that adopting certification and reporting requirements for consumer products and industrial equipment is consistent with activities identified in 10 CFR part 1021, appendix A to subpart D, A5 and A6. Accordingly, neither an environmental assessment nor an environmental impact statement is required.

E. Review Under Executive Order 13132

Executive Order 13132, ''Federalism,'' 64 FR 43255 (August 4, 1999), imposes certain requirements on agencies formulating and implementing policies or regulations that preempt State law or that have federalism implications. The Executive order requires agencies to examine the constitutional and statutory authority supporting any action that would limit the policymaking discretion of the States and to carefully assess the necessity for such actions. The Executive order also requires agencies to have an accountable process to ensure meaningful and timely input by State and local officials in the development of regulatory policies that have federalism implications. On March 14, 2000, DOE published a statement of policy describing the intergovernmental consultation process it will follow in the development of such regulations. 65 FR 13735. DOE examined this final rule and determined that it will not have a substantial direct effect on the States, on the relationship between the national government and the States, or on the distribution of power and responsibilities among the various levels of government. EPCA governs and prescribes Federal preemption of State regulations as to energy conservation for the products that are the subject of this final rule. States can petition DOE for exemption from such preemption to the extent, and based on criteria, set forth in EPCA. (42 U.S.C. 6297(d)) No further action is required by Executive Order 13132.

F. Review Under Executive Order 12988

Regarding the review of existing regulations and the promulgation of new regulations, section 3(a) of Executive Order 12988, ''Civil Justice Reform,'' 61 FR 4729 (Feb. 7, 1996), imposes on Federal agencies the general duty to adhere to the following requirements: (1) eliminate drafting errors and ambiguity; (2) write regulations to minimize litigation; (3) provide a clear legal standard for affected conduct rather than a general standard; and (4) promote simplification and burden reduction. Section 3(b) of Executive Order 12988 specifically requires that executive agencies make every reasonable effort to ensure that the regulation: (1) clearly specifies the preemptive effect, if any; (2) clearly specifies any effect on existing Federal law or regulation; (3) provides a clear legal standard for affected conduct while promoting simplification and burden reduction; (4) specifies the retroactive effect, if any; (5) adequately defines key terms; and (6) addresses other important issues affecting clarity and general draftsmanship under any guidelines issued by the Attorney General. Section 3(c) of Executive Order 12988 requires executive agencies to review regulations in light of applicable standards in sections 3(a) and 3(b) to determine whether they are met, or it is unreasonable to meet one or more of them. DOE has completed the required review and determined that, to the extent permitted by law, this final rule meets the relevant standards of Executive Order 12988.

G. Review Under the Unfunded Mandates Reform Act of 1995

Title II of the Unfunded Mandates Reform Act of 1995 (''UMRA'') requires each Federal agency to assess the effects of Federal regulatory actions on State, local, and Tribal governments and the private sector. Public Law 104–4, sec. 201 (codified at 2 U.S.C. 1531). For a regulatory action resulting in a rule that may cause the expenditure by State, local, and Tribal governments, in the aggregate, or by the private sector of $100 million or more in any one year (adjusted annually for inflation), section 202 of UMRA requires a Federal agency to publish a written statement that estimates the resulting costs, benefits, and other effects on the national economy. (2 U.S.C. 1532(a), (b)) The UMRA also requires a Federal agency to develop an effective process to permit timely input by elected officers of State, local, and Tribal governments on a proposed ''significant intergovernmental mandate,'' and requires an agency plan for giving notice and opportunity for timely input to potentially affected small governments before establishing any requirements that might significantly or uniquely affect small governments. On March 18, 1997, DOE published a statement of policy on its process for intergovernmental consultation under UMRA. 62 FR 12820; also available at *www.energy.gov/gc/office-general-counsel.* DOE examined this final rule according to UMRA and its statement of policy and determined that the rule contains neither an intergovernmental mandate, nor a mandate that may result in the expenditure of $100 million or more in any year, so these requirements do not apply.

H. Review Under the Treasury and General Government Appropriations Act, 1999

Section 654 of the Treasury and General Government Appropriations Act, 1999 (Pub. L. 105–277) requires Federal agencies to issue a Family Policymaking Assessment for any rule that may affect family well-being. This final rule will not have any impact on the autonomy or integrity of the family as an institution. Accordingly, DOE has concluded that it is not necessary to prepare a Family Policymaking Assessment.

I. Review Under Executive Order 12630

DOE has determined, under Executive Order 12630, ''Governmental Actions and Interference with Constitutionally Protected Property Rights,'' 53 FR 8859 (March 18, 1988), that this regulation will not result in any takings that might require compensation under the Fifth Amendment to the U.S. Constitution.

J. Review Under Treasury and General Government Appropriations Act, 2001

Section 515 of the Treasury and General Government Appropriations Act, 2001 (44 U.S.C. 3516 note) provides for agencies to review most disseminations of information to the public under guidelines established by

each agency pursuant to general guidelines issued by OMB. OMB's guidelines were published at 67 FR 8452 (Feb. 22, 2002), and DOE's guidelines were published at 67 FR 62446 (Oct. 7, 2002). Pursuant to OMB Memorandum M–19–15, Improving Implementation of the Information Quality Act (April 24, 2019), DOE published updated guidelines which are available at *www.energy.gov/sites/prod/files/2019/12/f70/DOE%20Final%20Updated%20IQA%20Guidelines%20Dec%202019.pdf.* DOE has reviewed this final rule under the OMB and DOE guidelines and has concluded that it is consistent with applicable policies in those guidelines.

K. Review Under Executive Order 13211

Executive Order 13211, ''Actions Concerning Regulations That Significantly Affect Energy Supply, Distribution, or Use,'' 66 FR 28355 (May 22, 2001), requires Federal agencies to prepare and submit to OMB, a Statement of Energy Effects for any significant energy action. A ''significant energy action'' is defined as any action by an agency that promulgated or is expected to lead to promulgation of a final rule, and that (1) is a significant regulatory action under Executive Order 12866, or any successor order; and (2) is likely to have a significant adverse effect on the supply, distribution, or use of energy; or (3) is designated by the Administrator of OIRA as a significant energy action. For any significant energy action, the agency must give a detailed statement of any adverse effects on energy supply, distribution, or use if the regulation is implemented, and of reasonable alternatives to the action and their expected benefits on energy supply, distribution, and use.

This regulatory action is not a significant regulatory action under Executive Order 12866. Moreover, it would not have a significant adverse effect on the supply, distribution, or use of energy, nor has it been designated as a significant energy action by the Administrator of OIRA. Therefore, it is not a significant energy action, and, accordingly, DOE has not prepared a Statement of Energy Effects.

L. Review Under Section 32 of the Federal Energy Administration Act of 1974

Under section 301 of the Department of Energy Organization Act (Pub. L. 95–91; 42 U.S.C. 7101), DOE must comply with section 32 of the Federal Energy Administration Act of 1974, as amended by the Federal Energy Administration Authorization Act of 1977 (15 U.S.C. 788; ''FEAA''). Section 32 essentially provides in relevant part that, where a proposed rule authorizes or requires use of commercial standards, the notice of proposed rulemaking must inform the public of the use and background of such standards. In addition, section 32(c) requires DOE to consult with the Attorney General and the Chairman of the Federal Trade Commission (''FTC'') concerning the impact of the commercial or industry standards on competition.

The modifications to the certification reporting requirements for CFLKs, GSILs, IRLs, ceiling fans, consumer furnaces and boilers, consumer water heaters, dishwashers, CCWs, battery chargers, and DPPPs adopted in this final rule do not incorporate testing methods contained in any commercial standards.

M. Materials Incorporated by Reference

The Director of the Federal Register previously approved the following standards from the Association of Home Appliance Manufacturers (''AHAM'') and the American National Standards Institute (''ANSI'') for incorporation by reference into §§ 429.19 and 429.59: ANSI/AHAM DW–1–2010, ''Household Electric Dishwashers'', and NSF International (NSF)/ANSI 50–2015, ''Equipment For Swimming Pools, Spas, Hot Tubs and Other Recreational Water Facilities,'' Annex C—''Test methods for the evaluation of centrifugal pumps,'' Section C.3, ''self-priming capability.''

N. Congressional Notification

As required by 5 U.S.C. 801, DOE will report to Congress on the promulgation of this rule before its effective date. The report will state that it has been determined that the rule is not a ''major rule'' as defined by 5 U.S.C. 804(2).

V. Approval of the Office of the Secretary

The Secretary of Energy has approved publication of this final rule.

List of Subjects in 10 CFR Part 429

Administrative practice and procedure, Confidential business information, Energy conservation, Household appliances, Imports, Incorporation by reference, Intergovernmental relations, Reporting and recordkeeping requirements, Small businesses.

Signing Authority

This document of the Department of Energy was signed on July 14, 2022, by Kelly J. Speakes-Backman, Principal Deputy Assistant Secretary for Energy Efficiency and Renewable Energy, pursuant to delegated authority from the Secretary of Energy. That document with the original signature and date is maintained by DOE. For administrative purposes only, and in compliance with requirements of the Office of the Federal Register, the undersigned DOE **Federal Register** Liaison Officer has been authorized to sign and submit the document in electronic format for publication, as an official document of the Department of Energy. This administrative process in no way alters the legal effect of this document upon publication in the **Federal Register**.

Signed in Washington, DC, on July 15, 2022.

Treena V. Garrett,

Federal Register Liaison Officer, U.S. Department of Energy.

For the reasons stated in the preamble, DOE amends part 429 of chapter II of title 10, Code of Federal Regulations as set forth below:

PART 429—CERTIFICATION, COMPLIANCE, AND ENFORCEMENT FOR CONSUMER PRODUCTS AND COMMERCIAL AND INDUSTRIAL EQUIPMENT

■ 1. The authority citation for part 429 continues to read as follows:

Authority: 42 U.S.C. 6291–6317; 28 U.S.C. 2461 note.

■ 2. Section 429.12 is amended by revising paragraph (d) to read as follows:

§ 429.12 General requirements applicable to certification reports.

* * * * *

(d) *Annual filing.* All data required by paragraphs (a) through (c) of this section shall be submitted to DOE annually, on or before the following dates:

TABLE 1 TO PARAGRAPH (d)

Product category	Deadline for data submission
Portable air conditioners	February 1.
Fluorescent lamp ballasts; Compact fluorescent lamps; General service fluorescent lamps, general service incandescent lamps, and incandescent reflector lamps; Candelabra base incandescent lamps and intermediate base incandescent lamps; Ceiling fans; Ceiling fan light kits; Showerheads; Faucets; Water closets; and Urinals.	March 1.
Water heaters; Consumer furnaces; Pool heaters; Commercial water heating equipment; Commercial packaged boilers; Commercial warm air furnaces; Commercial unit heaters; and Furnace fans.	May 1.
Dishwashers; Commercial pre-rinse spray valves; Illuminated exit signs; Traffic signal modules and pedestrian modules; and Distribution transformers.	June 1.
Room air conditioners; Central air conditioners and central air conditioning heat pumps; and Commercial heating, ventilating, air conditioning (HVAC) equipment.	July 1.
Consumer refrigerators, refrigerator-freezers, and freezers; Commercial refrigerators, freezers, and refrigerator-freezers; Automatic commercial ice makers; Refrigerated bottled or canned beverage vending machines; Walk-in coolers and walk-in freezers; and Consumer miscellaneous refrigeration products.	August 1.
Torchieres; Dehumidifiers; Metal halide lamp ballasts and fixtures; External power supplies; Pumps; and Battery chargers	September 1.
Residential clothes washers; Residential clothes dryers; Direct heating equipment; Cooking products; and Commercial clothes washers.	October 1.

* * * * *

■ 3. Section 429.17 is amended by adding a note before paragraph (a) and paragraph (c) to read as follows:

§ 429.17 Water heaters.

Note 1 to § 429.17. Prior to February 17, 2023, certification reports must be submitted as required either in this section or 10 CFR 429.17 as it appears in the 10 CFR parts 200 through 499 edition revised as of January 1, 2022. On or after February 17, 2023, certification reports must be submitted as required in this section.

* * * * *

(c) *Reporting of annual shipments for grid-enabled water heaters.* Pursuant to 42 U.S.C. 6295(e)(6)(C)(i), manufacturers of grid-enabled water heaters must report the total number of grid-enabled water heater units shipped for sale in the U.S. by the manufacturer for the previous calendar year (*i.e.,* January 1st through December 31st), as well as the calendar year that the shipments cover, starting on or before May 1, 2023, and annually on or before May 1 each year thereafter. This information shall be reported separately from the certification report required under paragraph (b)(2) of this section, and must be submitted to DOE in accordance with the submission procedures set forth in § 429.12(h). DOE will consider the annual reported shipments to be confidential business information without the need for the manufacturer to request confidential treatment of the information pursuant to § 429.7(c).

■ 4. Section 429.18 is amended by:

■ a. Revising the section heading;

■ b. Adding a note before paragraph (a); and

■ c. Revising paragraphs (a)(2)(vii) and (b)(2) and (3).

The addition and revisions read as follows:

§ 429.18 Consumer furnaces.

Note 1 to § 429.18. Prior to February 17, 2023, certification reports must be submitted as required either in this section or 10 CFR 429.18 as it appears in the 10 CFR parts 200 through 499 edition revised as of January 1, 2022. On or after February 17, 2023, certification reports must be submitted as required in this section.

(a) * * *

(2) * * *

(vii) The represented value of annual fuel utilization efficiency must be rounded to the nearest one-tenth of a percentage point. The represented values of standby mode power and off mode power must be rounded to the nearest one-tenth of a watt.

(b) * * *

(2) Pursuant to § 429.12(b)(13), a certification report shall include the following public product-specific information:

(i) For consumer furnaces and boilers: The annual fuel utilization efficiency (AFUE) in percent (%) and the input capacity in British thermal units per hour (Btu/h).

(ii) For non-weatherized oil-fired furnaces (including mobile home furnaces), electric furnaces, and boilers: The standby mode power consumption ($P_{W,SB}$) and off mode power consumption ($P_{W,OFF}$) in watts.

(3) Pursuant to § 429.12(b)(13), a certification report shall include the following additional product-specific information:

(i) For cast-iron sectional boilers: A declaration of whether certification is based on linear interpolation or testing.

(ii) For gas-fired hot water boilers and gas-fired steam boilers: A declaration that the manufacturer has not incorporated a constant-burning pilot.

(iii) For gas-fired hot water boilers, oil-fired hot water boilers, and electric hot water boilers: Whether the boiler is equipped with tankless domestic water heating coils, and if not, a declaration that the manufacturer has incorporated an automatic means for adjusting water temperature).

* * * * *

■ 5. Section 429.19 is amended by:

■ a. Adding a note before paragraph (a); and

■ b. Revising paragraphs (b)(2) and (3).

The addition and revisions read as follows:

§ 429.19 Dishwashers.

Note 1 to § 429.19. Prior to February 17, 2023, certification reports must be submitted as required either in this section or 10 CFR 429.19 as it appears in the 10 CFR parts 200 through 499 edition revised as of January 1, 2022. On or after February 17, 2023, certification reports must be submitted as required in this section.

* * * * *

(b) * * *

(2) Pursuant to § 429.12(b)(13), a certification report shall include the following public product-specific information: The estimated annual energy use in kilowatt hours per year (kWh/yr), the water consumption in gallons per cycle, and the capacity in number of place settings as specified in ANSI/AHAM DW–1–2010 (incorporated by reference, see § 429.4).

(3) Pursuant to § 429.12(b)(13), a certification report shall include the following additional product-specific information:

(i) The presence of a soil sensor, and if yes, the number of cycles required to reach calibration;

(ii) The water inlet temperature used for testing in degrees Fahrenheit (°F);

(iii) The cycle selected for the energy test and whether that cycle is soil-sensing;

(iv) The options selected for the energy test;

(v) Presence of a built-in water softening system, and if yes, the energy use in kilowatt-hours and the water use in gallons required for each regeneration of the water softening system, the number of regeneration cycles per year, and data and calculations used to derive these values; and

(vi) Indication of whether Cascade Complete powder was used as the detergent formulation in lieu of Cascade with the Grease Fighting Power of Dawn powder.

■ 6. Section 429.27 is amended by:

■ a. Adding a note before paragraph (a); and

■ b. Revising paragraphs (b)(2)(ii) and (iii).

The addition and revisions read as follows:

§ 429.27 General service fluorescent lamps, general service incandescent lamps, and incandescent reflector lamps.

Note 1 to § 429.27. Prior to February 17, 2023, certification reports must be submitted as required either in this section or 10 CFR 429.27 as it appears in the 10 CFR parts 200 through 499 edition revised as of January 1, 2022. On or after February 17, 2023, certification reports must be submitted as required in this section.

* * * * *

(b) * * *

(2) * * *

(ii) For incandescent reflector lamps: The testing laboratory's International Laboratory Accreditation Cooperation (ILAC) accreditation body's identification number or other approved identification assigned by the ILAC accreditation body, production dates of the units tested, the 12-month average lamp efficacy in lumens per watt (lm/W), lamp wattage (W), rated voltage (V), diameter in inches, and CRI.

(iii) For general service incandescent lamps: The testing laboratory's ILAC accreditation body's identification number or other approved identification assigned by the ILAC accreditation body, production dates of the units tested, the 12-month average maximum rate wattage in watts (W), the 12-month average minimum rated lifetime (hours), the 12-month average CRI, and initial lumen output in lumens (lm).

* * * * *

■ 7. Section 429.32 is amended by:

■ a. Adding a note before paragraph (a);

■ b. Revising paragraph (b); and

■ c. Adding paragraph (c).

The revision and additions read as follows:

§ 429.32 Ceiling fans.

Note 1 to § 429.32. Prior to February 17, 2023, certification reports must be submitted as required either in this section or 10 CFR 429.32 as it appears in the 10 CFR parts 200 through 499 edition revised as of January 1, 2022. On or after February 17, 2023, certification reports must be submitted as required in this section.

* * * * *

(b) *Certification reports.* (1) The requirements of § 429.12 are applicable to ceiling fans; and

(2) Pursuant to § 429.12(b)(13), a certification report shall include the following public product-specific information:

(i) For all ceiling fans: Blade span (in), and the number of speed control settings.

(ii) For small-diameter ceiling fans: A declaration of whether the ceiling fan is a multi-head ceiling fan, and the ceiling fan efficiency (CFM/W).

(iii) For large-diameter ceiling fans: Ceiling fan energy index (CFEI) for high speed, and 40 percent speed or the nearest speed that is not less than 40 percent speed.

(3) Pursuant to § 429.12(b)(13), a certification report shall include the following additional product-specific information:

(i) For all ceiling fans: A declaration that the manufacturer has incorporated the applicable design requirements.

(ii) For small-diameter ceiling fans: Standby power, blade edge thickness (in), airflow (CFM) at high speed, and blade revolutions per minute (RPM) at high speed.

(iii) For low-speed small-diameter ceiling fans: The distance (in) between the ceiling and the lowest point on the fan blades (in both hugger and standard configurations for multi-mount fans).

(c) *Rounding requirements.* Any represented value of ceiling fan efficiency, as described in paragraph (a)(2)(i) of this section, must be expressed in cubic feet per minute per watt (CFM/W) and rounded to the nearest whole number. Any represented value of ceiling fan energy index, as described in paragraph (a)(2)(i) of this section, must be expressed in CFEI and rounded to the nearest hundredth.

■ 8. Section 429.33 is amended by:

■ a. Adding a note before paragraph (a); and

■ b. Revising paragraphs (b) and (c).

The addition and revisions read as follows:

§ 429.33 Ceiling fan light kits.

Note 1 to § 429.33. Prior to February 17, 2023, certification reports must be submitted as required either in this section or 10 CFR 429.33 as it appears in the 10 CFR parts 200 through 499 edition revised as of January 1, 2022. On or after February 17, 2023, certification reports must be submitted as required in this section.

* * * * *

(b) *Certification reports.* (1) The requirements of § 429.12 are applicable to ceiling fan light kits; and

(2) Pursuant to § 429.12(b)(13), a certification report shall include the following public product-specific information:

(i) For ceiling fan light kits manufactured prior to January 1, 2020:

(A) For ceiling fan light kits with sockets for medium screw base lamps: The rated wattage in watts (W) and the system's efficacy in lumens per watt (lm/W).

(B) For ceiling fan light kits with pin-based sockets for fluorescent lamps: The rated wattage in watts (W), the system's efficacy in lumens per watt (lm/W), and the length of the lamp in inches (in).

(C) For ceiling fan light kits with any other socket type: The rated wattage in watts (W) and the number of individual sockets.

(ii) For ceiling fan light kits manufactured on or after January 1, 2020:

(A) For each basic model of lamp and/or each basic model of integrated solid-state lighting (SSL) circuitry packaged with the ceiling fan light kit, the brand, basic model number, test sample size, kind of lamp (*i.e.,* general service fluorescent lamp (GSFL); fluorescent lamp with a pin base that is not a GSFL; compact fluorescent lamp (CFL) with a medium screw base; CFL with a base that is not medium screw base [*e.g.,* candelabra base]; other fluorescent lamp [not GSFL or CFL]; general service incandescent lamp (GSIL); candelabra base incandescent lamp; intermediate base incandescent lamp; incandescent reflector lamp; other incandescent lamp [not GSIL, IRL, candelabra base or intermediate base incandescent lamp]; integrated LED lamp; integrated SSL circuitry; other SSL products [not integrated LED lamp]; other lamp not specified), lumen output in lumens (lm), and efficacy in lumens per watt (lm/W).

(B) For each lamp basic model identified in paragraph (b)(2)(ii)(A) of this section that is a compact fluorescent lamp with a medium screw base, the lumen maintenance at 40 percent of lifetime in percent (%) (and whether the value is estimated), the lumen maintenance at 1,000 hours in percent (%), the lifetime in hours (h) (and whether the value is estimated), and the sample size for rapid cycle stress testing and results in number of units passed (and whether the value is

estimated). Estimates of lifetime, lumen maintenance at 40 percent of lifetime, and rapid cycle stress test surviving units may be reported until testing is complete. Manufacturers are required to maintain records of the development of all estimated values and any associated initial test data in accordance with § 429.71.

(3) Pursuant to § 429.12(b)(13), a certification report shall include the following additional product-specific information:

(i) For ceiling fan light kits with any other socket type manufactured prior to January 1, 2020, a declaration that the basic model meets the applicable design requirement, and the features that have been incorporated into the ceiling fan light kit to meet the applicable design requirement (*e.g.,* circuit breaker, fuse, ballast).

(ii) For ceiling fan light kits manufactured on or after January 1, 2020:

(A) A declaration that the ceiling fan light kit is packaged with lamps sufficient to fill all of the lamp sockets;

(B) For each basic model of lamp and/or each basic model of integrated SSL circuitry packaged with the ceiling fan light kit, a declaration that, where applicable, the lamp basic model was tested by a laboratory accredited as required under § 430.25 of this chapter; and

(C) For ceiling fan light kits with pin-based sockets for fluorescent lamps, a declaration that each ballast for such lamps is an electronic ballast.

(c) *Rounding requirements.* (1) Any represented value of efficacy of ceiling fan light kits as described in paragraph (a) of this section must be expressed in lumens per watt and rounded to the nearest tenth of a lumen per watt.

(2) Round lumen output to three significant digits.

(3) Round lumen maintenance at 1,000 hours to the nearest tenth of a percent.

(4) Round lumen maintenance at 40 percent of lifetime to the nearest tenth of a percent.

(5) Round lifetime to the nearest whole hour.

■ 9. Section 429.46 is amended by:

■ a. Adding a note before paragraph (a);

■ b. Revising paragraph (a)(2)(i) introductory text;

■ c. Adding paragraphs (a)(3) and (4);

■ d. Revising paragraph (b)(2); and

■ e. Adding paragraph (c).

The revisions and additions read as follows:

§ 429.46 Commercial clothes washers.

Note 1 to § 429.46. Prior to February 17, 2023, certification reports must be submitted as required either in this section or 10 CFR 429.46 as it appears in the 10 CFR parts 200 through 499 edition revised as of January 1, 2022. On or after February 17, 2023, certification reports must be submitted as required in this section.

(a) * * *

(2) * * *

(i) Any represented value of the integrated water factor or other measure of energy or water consumption of a basic model for which consumers would favor lower values shall be greater than or equal to the higher of:

* * * * *

(3) The clothes container capacity of a basic model reported in accordance with paragraph (b)(2) of this section shall be the mean of the measured clothes container capacity (C) of all tested units of the basic model.

(4) The corrected remaining moisture content (RMC) of a basic model reported in accordance with paragraph (b)(2) of this section shall be the mean of the final RMC value measured for all tested units of the basic model.

(b) * * *

(2) Pursuant to § 429.12(b)(13), a certification report shall include the following public product-specific information:

(i) The modified energy factor (MEF_{J2}), in cubic feet per kilowatt-hour per cycle (cu ft/kWh/cycle);

(ii) The integrated water factor (IWF), in gallons per cycle per cubic feet (gal/cycle/cu ft);

(iii) The clothes container capacity, in cubic feet (cu ft);

(iv) The type of loading (top-loading or front-loading); and

(v) The corrected RMC (expressed as a percentage).

(c) *Reported values.* Values reported pursuant to this section must be rounded as follows: Clothes container capacity to the nearest 0.1 cu ft, and corrected RMC to the nearest 0.1 percentage point.

■ 10. Section 429.59 is amended by:

■ a. Adding a note before paragraph (a); and

■ b. Revising paragraphs (b)(2)(iv) and (b)(3)(iv).

The addition and revisions read as follows:

§ 429.59 Pumps.

Note 1 to § 429.59. Prior to February 17, 2023, certification reports must be submitted as required either in this section or 10 CFR 429.59 as it appears in the 10 CFR parts 200 through 499 edition revised as of January 1, 2022. On or after February 17, 2023, certification reports must be submitted as required in this section.

* * * * *

(b) * * *

(2) * * *

(iv) For a dedicated-purpose pool pump (other than an integral cartridge-filter or sand-filter pool pump): weighted energy factor (WEF) in kilogallons per kilowatt-hour (kgal/kWh); rated hydraulic horsepower in horsepower (hp); the speed configuration for which the pump is being rated (*i.e.,* single-speed, two-speed, multi-speed, or variable-speed); true power factor at all applicable test procedure load points i (dimensionless), as specified in Table 1 of appendix B or C to subpart Y of part 431 of this chapter, as applicable; dedicated-purpose pool pump nominal motor horsepower in horsepower (hp); dedicated-purpose pool pump motor total horsepower in horsepower (hp); dedicated-purpose pool pump service factor (dimensionless); for self-priming pool filter pumps and non-self-priming pool filter pumps: the maximum head (in feet) which is based on the mean of the units in the tested sample; a statement regarding whether freeze protection is shipped enabled or disabled; for dedicated-purpose pool pumps (DPPPs) distributed in commerce with freeze protection controls enabled: the default dry-bulb air temperature setting (in °F), default run time setting (in minutes), and default motor speed (in rpm); for self-priming pool filter pumps a statement regarding whether the pump is certified with NSF/ANSI 50–2015 (incorporated by reference, see § 429.4) as self-priming; and, for self-priming pool filter pumps that are not certified with NSF/ANSI 50–2015 as self-priming: the vertical lift (in feet) and true priming time (in minutes) for the DPPP model.

* * * * *

(3) * * *

(iv) For a dedicated-purpose pool pump (other than an integral cartridge-filter or sand-filter pool pump): Calculated driver power input and flow rate at each load point i (P_i and Q_i), in horsepower (hp) and gallons per minute (gpm), respectively.

* * * * *

■ 11. Section 429.70 is amended by adding paragraph (i) to read as follows:

§ 429.70 Alternative methods for determining energy efficiency and energy use.

* * * * *

(i) *Alternative determination of standby mode and off mode power consumption for untested basic models of consumer furnaces and consumer boilers.* For models of consumer furnaces or consumer boilers that have

identical standby mode and off mode power consuming components, ratings for untested basic models may be established in accordance with the following procedures in lieu of testing. This method allows only for the use of ratings identical to those of a tested basic model as provided in paragraphs (i)(1) and (2) of this section; simulations or other modeling predictions for ratings for standby mode power consumption and off mode power consumption are not permitted.

(1) *Consumer furnaces.* Rate the standby mode and off mode power consumption of an untested basic model of a consumer furnace using the standby mode and off mode power consumption obtained from a tested basic model as a basis for ratings if all aspects of the electrical components, controls, and design that impact the standby mode power consumption and off mode power consumption are identical.

(2) *Consumer boilers.* Rate the standby mode and off mode power consumption of an untested basic model of a consumer boiler using the standby mode and off mode power consumption obtained from a tested basic model as a basis for ratings if all aspects of the electrical components, controls, and design that impact the standby mode power consumption and off mode power consumption are identical.

[FR Doc. 2022–15474 Filed 7–21–22; 8:45 am]

BILLING CODE 6450–01–P

FEDERAL REGISTER

Vol. 87 Friday,

No. 140 July 22, 2022

Part III

The President

Notice of July 21, 2022—Continuation of the National Emergency With Respect to Transnational Criminal Organizations

Federal Register
Vol. 87, No. 140
Friday, July 22, 2022

Presidential Documents

Title 3—

The President

Notice of July 21, 2022

Continuation of the National Emergency With Respect to Transnational Criminal Organizations

On July 24, 2011, by Executive Order 13581, the President declared a national emergency pursuant to the International Emergency Economic Powers Act (50 U.S.C. 1701 *et seq.*) to deal with the unusual and extraordinary threat to the national security, foreign policy, and economy of the United States constituted by significant transnational criminal organizations.

On March 15, 2019, by Executive Order 13863, the President took additional steps to deal with the national emergency with respect to significant transnational criminal organizations in view of the evolution of these organizations as well as the increasing sophistication of their activities, which threaten international political and economic systems and pose a direct threat to the safety and welfare of the United States and its citizens, and given the ability of these organizations to derive revenue through widespread illegal conduct, including acts of violence and abuse that exhibit a wanton disregard for human life as well as many other crimes enriching and empowering these organizations.

Significant transnational criminal organizations continue to pose an unusual and extraordinary threat to the national security, foreign policy, and economy of the United States. For these reasons, the national emergency declared in Executive Order 13581 on July 24, 2011, under which additional steps were taken in Executive Order 13863 on March 15, 2019, must continue in effect beyond July 24, 2022. Therefore, in accordance with section 202(d) of the National Emergencies Act (50 U.S.C. 1622(d)), I am continuing for 1 year the national emergency with respect to significant transnational criminal organizations declared in Executive Order 13581.

This notice shall be published in the *Federal Register* and transmitted to the Congress.

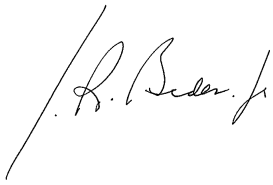

THE WHITE HOUSE,
July 21, 2022.

[FR Doc. 2022–15973
Filed 7–21–22; 11:15 am]
Billing code 3395–F2–P

Reader Aids

Federal Register

Vol. 87, No. 140

Friday, July 22, 2022

CUSTOMER SERVICE AND INFORMATION

Federal Register/Code of Federal Regulations	
General Information, indexes and other finding aids	**202–741–6000**
Laws	**741–6000**
Presidential Documents	
Executive orders and proclamations	**741–6000**
The United States Government Manual	**741–6000**
Other Services	
Electronic and on-line services (voice)	**741–6020**
Privacy Act Compilation	**741–6050**

ELECTRONIC RESEARCH

World Wide Web

Full text of the daily Federal Register, CFR and other publications is located at: **www.govinfo.gov.**

Federal Register information and research tools, including Public Inspection List and electronic text are located at: **www.federalregister.gov.**

E-mail

FEDREGTOC (Daily Federal Register Table of Contents Electronic Mailing List) is an open e-mail service that provides subscribers with a digital form of the Federal Register Table of Contents. The digital form of the Federal Register Table of Contents includes HTML and PDF links to the full text of each document.

To join or leave, go to **https://public.govdelivery.com/accounts/USGPOOFR/subscriber/new**, enter your email address, then follow the instructions to join, leave, or manage your subscription.

PENS (Public Law Electronic Notification Service) is an e-mail service that notifies subscribers of recently enacted laws.

To subscribe, go to **http://listserv.gsa.gov/archives/publaws-l.html and select** *Join or leave the list (or change settings);* then follow the instructions.

FEDREGTOC and **PENS** are mailing lists only. We cannot respond to specific inquiries.

Reference questions. Send questions and comments about the Federal Register system to: **fedreg.info@nara.gov**

The Federal Register staff cannot interpret specific documents or regulations.

FEDERAL REGISTER PAGES AND DATE, JULY

39329–39732 1
39733–40088 5
40089–40428 6
40429–40706 7
40707–41024 8
41025–41242 11
41243–41580 12
41581–42058 13
42059–42296 14
42297–42632 15
42633–42948 18
42949–43198 19
43199–43388 20
43389–43730 21
43731–43984 22

CFR PARTS AFFECTED DURING JULY

At the end of each month the Office of the Federal Register publishes separately a List of CFR Sections Affected (LSA), which lists parts and sections affected by documents published since the revision date of each title.

3 CFR

Proclamations:
10421 40707
10422 42051
10423 43199
10424 43201

Executive Orders:
10476 42053
14077 43203
14078 ..... 43203, 43389

Administrative Orders:
Memorandums:
Memorandum of July 1, 2022 41025
Memorandum of July 8, 2022 42059
Notices:
Notice of July 11, 2022 42057
Notice of July 21, 2022 43983

6 CFR

Proposed Rules:
5 43749

7 CFR

1714 39329
3434 42949
3550 40709
5001 42297

Proposed Rules:
1 41077
66 43751
272 43450
959 40746
1230 43222

8 CFR

103 41027
212 41027
214 41027
274a 41027

10 CFR

429 43952
430 42297

Proposed Rules:
30 42969
70 42969
430 ..... 40590, 42270
431 43226

12 CFR

Ch. VI 43227
404 41032
1006 39733
1022 ..... 41042, 41243

Proposed Rules:
25 39792
228 39792
327 39388
345 39792
1026 42662

13 CFR

Proposed Rules:
121 ..... 40034, 40141
125 ..... 40141, 43731
128 40141

14 CFR

39 ..... 39329, 39735, 39738, 39741, 39743, 40089, 40429, 40435, 40710, 40714, 41046, 41049, 41581, 42061, 42063, 42066, 42068, 42308, 42312, 42315, 42318, 42951, 43209, 43395, 43398, 43400, 43403
71 ..... 39332, 39334, 39335, 39745, 41052, 41054, 41055, 41057, 41058, 41583, 42070, 42320, 42633, 42954
77 39746
97 ..... 40091, 40095, 43406, 43407

Proposed Rules:
39 ..... 40164, 40460, 40747, 40749, 40752, 40755, 41263, 41265, 41627, 41629, 42106, 42970, 43450, 43453, 43456, 43459, 43462
71 ..... 41632, 41633, 41635, 42395, 43755, 43757, 43759
91 42109
121 42109
125 42109
135 42109

15 CFR

Proposed Rules:
801 39411
922 42800

16 CFR

1231 42633
1241 41059

Proposed Rules:
463 42012
1223 42117
1421 43688

17 CFR

1 41246
232 42960
240 43168
270 41060
276 43168

18 CFR

Proposed Rules:
35 39934
141 39414

19 CFR

12 42636
122 43740

Proposed Rules:

362 39426

20 CFR

404 42642

21 CFR

Proposed Rules:

2 42398
112 42973
174 41079
175 41079
177 41079
1301 42662
1308 ....40167, 42979

23 CFR

Proposed Rules:

490 42401

24 CFR

Proposed Rules:

3280 43114
3282 43114
3285 43114
3286 43114

25 CFR

Proposed Rules:

559 41637

26 CFR

Proposed Rules:

1 40168

28 CFR

814 41584

29 CFR

21 39337
4262 40968

Proposed Rules:

9 42552

30 CFR

254 39337

31 CFR

356 40438
587 40441
589 41589
594 39337

32 CFR

842 39339

Proposed Rules:

310 43228
1900 39432

33 CFR

100 ....39748, 40442, 40717, 40720, 41247, 42321, 43212
110 41248
117 ....42644, 42645, 42647
165 ....39339, 39341, 39343, 40442, 40445, 40447, 40449, 40723, 40725, 40727, 40729, 41060, 41250, 41590, 41592, 41594, 42072, 42322, 42649, 42962, 43410, 43742

Proposed Rules:

165 ....42665, 42985
334 41637

34 CFR

Ch. II 40406
Ch. III 41250

Proposed Rules:

106 41390
600 41878
668 41878
674 41878
682 41878
685 41878

37 CFR

202 43744

Proposed Rules:

1 41267

38 CFR

0 40451
17 ....41594, 43746
70 43746

Proposed Rules:

8 42118

39 CFR

111 40453
3010 43213
3040 40454
3065 42074

Proposed Rules:

3050 ....42667, 42669, 42987

40 CFR

52 ....39750, 40097, 41061, 41064, 41074, 41256, 42324
61 43412
63 43412
80 39600
81 39750
180 ....39345, 39752, 42327, 42332, 43214, 43420
261 41604
271 41610
282 ....42075, 42083, 42089
372 42651
720 39756
721 39756
723 39756
1090 39600

Proposed Rules:

9 42988
52 ....40759, 41088, 42126, 42132, 42422, 42424, 43760, 43764
61 43464
63 41639
81 43764
98 42988
174 43231
180 43231
271 41640
282 ....42135, 42136
372 43772

41 CFR

51-4 43427

42 CFR

414 42096
493 41194

Proposed Rules:

410 42137
482 42137
483 42137
485 ....40350, 42137
488 42137
489 40350

43 CFR

2 42097

45 CFR

1356 42338

Proposed Rules:

620 42431

47 CFR

0 42916
64 ....39770, 42656, 42916
73 39790

Proposed Rules:

1 42670
64 42670
73 40464
74 40464

48 CFR

Proposed Rules:

523 40476
552 40476

49 CFR

571 ....41618, 42339
830 42100

Proposed Rules:

23 43620
26 43620
224 43467
531 39439

50 CFR

17 ....39348, 40099, 40115, 43433
20 42598
216 42104
218 40888
300 ....40731, 41259, 41625
622 ....40458, 40742
635 ....39373, 39383, 42373, 43447
648 ....40139, 42375, 42962, 43219
660 ....39384, 40744, 41260
679 ....41626, 42661, 43220
680 42390

Proposed Rules:

17 ....40172, 40477, 41641, 43233, 43489
216 40763
226 41271
300 40763
622 ....40478, 42690
660 39792
697 41084

LIST OF PUBLIC LAWS

Note: No public bills which have become law were received by the Office of the Federal Register for inclusion in today's **List of Public Laws**.

Last List June 30, 2022

Public Laws Electronic Notification Service (PENS)

PENS is a free email notification service of newly enacted public laws. To subscribe, go to *https://listserv.gsa.gov/cgi-bin/wa.exe?SUBED1=PUBLAWS-L&A=1*

Note: This service is strictly for email notification of new laws. The text of laws is not available through this service. **PENS** cannot respond to specific inquiries sent to this address.