DEPARTMENT OF EDUCATION

[Docket No.: ED–2022–SCC–0065]

Agency Information Collection Activities; Submission to the Office of Management and Budget for Review and Approval; Comment Request; FERPA and PPRA E-Complaint Forms

AGENCY: Office of Management (OM), Department of Education (ED).

ACTION: Notice.

SUMMARY: In accordance with the Paperwork Reduction Act of 1995, ED is proposing an extension without change of a currently approved information collection.

DATES: Interested persons are invited to submit comments on or before August 22, 2022.

ADDRESSES: Written comments and recommendations for proposed information collection requests should be sent within 30 days of publication of this notice to *www.reginfo.gov/public/do/PRAMain.* Find this information collection request (ICR) by selecting ''Department of Education'' under ''Currently Under Review,'' then check ''Only Show ICR for Public Comment'' checkbox. *Reginfo.gov* provides two links to view documents related to this information collection request. Information collection forms and instructions may be found by clicking on the ''View Information Collection (IC) List'' link. Supporting statements and other supporting documentation may be found by clicking on the ''View Supporting Statement and Other Documents'' link.

IComments may also be sent to *ICDocketmgr@ed.gov*.

FOR FURTHER INFORMATION CONTACT: For specific questions related to collection activities, please contact Frank Miller, 202–453–6631.

SUPPLEMENTARY INFORMATION: The Department, in accordance with the Paperwork Reduction Act of 1995 (PRA) (44 U.S.C. 3506(c)(2)(A)), provides the general public and Federal agencies with an opportunity to comment on proposed, revised, and continuing collections of information. This helps the Department assess the impact of its information collection requirements and minimize the public's reporting burden. It also helps the public understand the Department's information collection requirements and provide the requested data in the desired format. ED is soliciting comments on the proposed ICR that is described below. The Department is especially interested in public comment addressing the following issues: (1) is this collection necessary to the proper functions of the Department; (2) will this information be processed and used in a timely manner; (3) is the estimate of burden accurate; (4) how might the Department enhance the quality, utility, and clarity of the information to be collected; and (5) how might the Department minimize the burden of this collection on the respondents, including through the use of information technology. Please note that written comments received in response to this notice will be considered public records.

Title of Collection: FERPA and PPRA E-Complaint Forms.

OMB Control Number: 1880–0544.

Type of Review: An extension without change of a currently approved information collection.

Respondents/Affected Public: Individuals and Households.

Total Estimated Number of Annual Responses: 500.

Total Estimated Number of Annual Burden Hours: 500.

Abstract: The Student Privacy Policy Office (SPPO) reviews, investigates, and processes complaints of alleged violations of Family Education Rights and Privacy Act (FERPA) and Protection of Pupil Rights Amendment (PPRA) filed by parents and eligible students. SPPO's authority to investigate, review, and process complaints extends to allegations of violations of FERPA by any recipient of Unites States Department of Education (Department) funds under a program administered by the Secretary (*e.g.,* schools, school districts, postsecondary institutions, state educational agencies, and other third parties that receive Department funds).

Dated: July 19, 2022.

Stephanie Valentine,

PRA Coordinator, Strategic Collections and Clearance Governance and Strategy Division, Office of Chief Data Officer. Office of Planning, Evaluation and Policy Development.

[FR Doc. 2022–15712 Filed 7–21–22; 8:45 am]

BILLING CODE 4000–01–P

DEPARTMENT OF ENERGY

[Case Number 2022–004; EERE–2022–BT–WAV–0010]

Energy Conservation Program: Notification of Petition for Waiver of Norlake, Inc., dba Refrigerated Solutions Group, From the Department of Energy Walk-In Coolers and Walk-In Freezers Test Procedure and Notification of Grant of Interim Waiver

AGENCY: Office of Energy Efficiency and Renewable Energy, Department of Energy.

ACTION: Notification of petition for waiver and grant of an interim waiver; request for comments.

SUMMARY: This notification announces receipt of and publishes a petition for waiver and interim waiver from Norlake, Inc., dba Refrigerated Solutions Group (''RSG''), which seeks a waiver for specified walk-in cooler and walk-in freezer (''walk-in'') refrigeration system basic models from the U.S. Department of Energy (''DOE'') test procedure used for determining the efficiency of walk-in refrigeration systems. DOE also gives notification of an Interim Waiver Order that requires RSG to test and rate the specified walk-in basic models in accordance with the alternate test procedure set forth in the Interim Waiver Order. DOE solicits comments, data, and information concerning RSG's petition and its suggested alternate test procedure so as to inform DOE's final decision on RSG's waiver request.

DATES: Written comments and information are requested and will be accepted on or before August 22, 2022.

ADDRESSES: Interested persons are encouraged to submit comments using the Federal eRulemaking Portal at *www.regulations.gov* under docket number EERE–2022–BT–WAV–0010. Alternatively, interested persons may submit comments, identified by docket number EERE–2022–BT–WAV–0010, by any of the following methods:

1. *Email:* to *RSGWICF2022WAV0010@ee.doe.gov.* Include docket number EERE–2022–BT–WAV–0010 in the subject line of the message.

2. *Postal Mail:* Appliance and Equipment Standards Program, U.S. Department of Energy, Building Technologies Office, Mailstop EE–5B, 1000 Independence Avenue SW, Washington, DC 20585–0121. Telephone: (202) 287–1445. If possible, please submit all items on a compact disc (''CD''), in which case it is not necessary to include printed copies.

3. *Hand Delivery/Courier:* Appliance and Equipment Standards Program, U.S.

Department of Energy, Building Technologies Office, 950 L'Enfant Plaza SW, 6th Floor, Washington, DC 20024. Telephone: (202) 287–1445. If possible, please submit all items on a CD, in which case it is not necessary to include printed copies.

No telefacsimiles (''faxes'') will be accepted. For detailed instructions on submitting comments and additional information on this process, see the **SUPPLEMENTARY INFORMATION** section of this document.

Docket: The docket, which includes **Federal Register** notices, comments, and other supporting documents/materials, is available for review at *www.regulations.gov.* All documents in the docket are listed in the *www.regulations.gov* index. However, some documents listed in the index, such as those containing information that is exempt from public disclosure, may not be publicly available.

The docket web page can be found at *www.regulations.gov/document/EERE-2022-BT-WAV-0010-0001.* The docket web page contains instruction on how to access all documents, including public comments, in the docket. See the **SUPPLEMENTARY INFORMATION** section for information on how to submit comments through *www.regulations.gov.*

FOR FURTHER INFORMATION CONTACT:

Ms. Julia Hegarty, U.S. Department of Energy, Office of Energy Efficiency and Renewable Energy, Building Technologies Office, Mailstop EE–5B, 1000 Independence Avenue SW, Washington, DC 20585–0121. Telephone: (240) 597–6737. Email: *AS_Waiver_Request@ee.doe.gov.*

Mr. Michael Kido, U.S. Department of Energy, Office of the General Counsel, Mail Stop GC–33, Forrestal Building, 1000 Independence Avenue SW, Washington, DC 20585–0103. Telephone: (202) 586–8145. Email: *Michael.Kido@hq.doe.gov.*

SUPPLEMENTARY INFORMATION: DOE is publishing RSG's petition for waiver in its entirety, pursuant to 10 CFR 431.401(b)(1)(iv).[1] DOE is also publishing the Interim Waiver Order granted RSG, which serves as notification of DOE's determination regarding RSG's petition for an interim waiver, pursuant to 10 CFR 431.401(e)(3). DOE invites all interested parties to submit in writing by August 22, 2022, comments and information on all aspects of the petition, including the alternate test procedure. Pursuant to 10 CFR 431.401(d), any person submitting written comments to DOE must also send a copy of such comments to the petitioner. The contact information for the petitioner is Mr. Bill Larson, *bilarson@refsg.com.*

Submitting comments via www.regulations.gov. The *www.regulations.gov* web page will require you to provide your name and contact information. Your contact information will be viewable to DOE Building Technologies staff only. Your contact information will not be publicly viewable except for your first and last names, organization name (if any), and submitter representative name (if any). If your comment is not processed properly because of technical difficulties, DOE will use this information to contact you. If DOE cannot read your comment due to technical difficulties and cannot contact you for clarification, DOE may not be able to consider your comment.

However, your contact information will be publicly viewable if you include it in the comment or in any documents attached to your comment. Any information that you do not want to be publicly viewable should not be included in your comment, nor in any document attached to your comment. If this instruction is followed, persons viewing comments will see only first and last names, organization names, correspondence containing comments, and any documents submitted with the comments.

Do not submit to *www.regulations.gov* information for which disclosure is restricted by statute, such as trade secrets and commercial or financial information (hereinafter referred to as Confidential Business Information (''CBI'')). Comments submitted through *www.regulations.gov* cannot be claimed as CBI. Comments received through the website will waive any CBI claims for the information submitted. For information on submitting CBI, see the Confidential Business Information section.

DOE processes submissions made through *www.regulations.gov* before posting. Normally, comments will be posted within a few days of being submitted. However, if large volumes of comments are being processed simultaneously, your comment may not be viewable for up to several weeks. Please keep the comment tracking number that *www.regulations.gov* provides after you have successfully uploaded your comment.

Submitting comments via email, hand delivery/courier, or postal mail. Comments and documents submitted via email, hand delivery/courier, or postal mail also will be posted to *www.regulations.gov.* If you do not want your personal contact information to be publicly viewable, do not include it in your comment or any accompanying documents. Instead, provide your contact information on a cover letter. Include your first and last names, email address, telephone number, and optional mailing address. The cover letter will not be publicly viewable as long as it does not include any comments.

Include contact information each time you submit comments, data, documents, and other information to DOE. If you submit via postal mail or hand delivery/courier, please provide all items on a CD, if feasible, in which case it is not necessary to submit printed copies. Faxes will not be accepted.

Comments, data, and other information submitted to DOE electronically should be provided in PDF (preferred), Microsoft Word or Excel, WordPerfect, or text (ASCII) file format. Provide documents that are not secured, written in English and free of any defects or viruses. Documents should not contain special characters or any form of encryption and, if possible, they should carry the electronic signature of the author.

Campaign form letters. Please submit campaign form letters by the originating organization in batches of between 50 to 500 form letters per PDF or as one form letter with a list of supporters' names compiled into one or more PDFs. This reduces comment processing and posting time.

Confidential Business Information. According to 10 CFR 1004.11, any person submitting information that he or she believes to be confidential and exempt by law from public disclosure should submit via email two well-marked copies: one copy of the document marked confidential including all the information believed to be confidential, and one copy of the document marked ''non-confidential'' with the information believed to be confidential deleted. Submit these documents via email. DOE will make its own determination about the confidential status of the information and treat it according to its determination.

It is DOE's policy that all comments may be included in the public docket, without change and as received, including any personal information provided in the comments (except information deemed to be exempt from public disclosure).

[1] The petition did not identify any of the information contained therein as confidential business information.

Case Number 2022–004

Interim Waiver Order

I. Background and Authority

The Energy Policy and Conservation Act, as amended (''EPCA''),[2] authorizes the U.S. Department of Energy (''DOE'') to regulate the energy efficiency of a number of consumer products and certain industrial equipment. (42 U.S.C. 6291–6317) Title III, Part C[3] of EPCA established the Energy Conservation Program for Certain Industrial Equipment, which sets forth a variety of provisions designed to improve energy efficiency for certain types of industrial equipment. This equipment includes walk-in coolers and walk-in freezers (''walk-ins''), the focus of this document. (42 U.S.C. 6311(1)(G))

The energy conservation program under EPCA consists essentially of four parts: (1) testing, (2) labeling, (3) Federal energy conservation standards, and (4) certification and enforcement procedures. Relevant provisions of EPCA include definitions (42 U.S.C. 6311), energy conservation standards (42 U.S.C. 6313), test procedures (42 U.S.C. 6314), labeling provisions (42 U.S.C. 6315), and the authority to require information and reports from manufacturers (42 U.S.C. 6316).

The Federal testing requirements consist of test procedures that manufacturers of covered equipment must use as the basis for: (1) certifying to DOE that their equipment complies with the applicable energy conservation standards adopted pursuant to EPCA (42 U.S.C. 6316(a); 42 U.S.C. 6295(s)), and (2) making representations about the efficiency of that equipment (42 U.S.C. 6314(d)). Similarly, DOE must use these test procedures to determine whether the equipment complies with relevant standards promulgated under EPCA. (42 U.S.C. 6316(a); 42 U.S.C. 6295(s))

Under 42 U.S.C. 6314, EPCA sets forth the criteria and procedures DOE is required to follow when prescribing or amending test procedures for covered equipment. EPCA requires that any test procedures prescribed or amended under this section must be reasonably designed to produce test results which reflect the energy efficiency, energy use or estimated annual operating cost of covered equipment during a representative average use cycle and requires that test procedures not be unduly burdensome to conduct. (42 U.S.C. 6314(a)(2)) The test procedure used to determine the net capacity and annual walk-in energy factor (''AWEF'') of walk-in refrigeration systems is contained in the Code of Federal Regulations (''CFR'') at 10 CFR part 431, subpart R, appendix C, *Uniform Test Method for the Measurement of Net Capacity and AWEF of Walk-in Cooler and Walk-in Freezer Refrigeration Systems*'' (''appendix C to subpart R'').

Under 10 CFR 431.401, any interested person may submit a petition for waiver from DOE's test procedure requirements. DOE will grant a waiver from the test procedure requirements if DOE determines either that the basic model(s) for which the waiver was requested contains a design characteristic that prevents testing of the basic model according to the prescribed test procedures, or that the prescribed test procedures evaluate the basic model in a manner so unrepresentative of its true energy or water consumption characteristics as to provide materially inaccurate comparative data. 10 CFR 431.401(f)(2). A petitioner must include in its petition any alternate test procedures known to the petitioner to evaluate the performance of the equipment type in a manner representative of the energy and/or water consumption characteristics of the basic model. 10 CFR 431.401(b)(1)(iii). DOE may grant the waiver subject to conditions, including adherence to alternate test procedures. 10 CFR 431.401(f)(2).

As soon as practicable after the granting of any waiver, DOE will publish in the **Federal Register** a notice of proposed rulemaking to amend its regulations so as to eliminate any need for the continuation of such waiver. 10 CFR 431.401(*l*) As soon thereafter as practicable, DOE will publish in the **Federal Register** a final rule to that effect. *Id.*

The waiver process also provides that DOE may grant an interim waiver if it appears likely that the underlying petition for waiver will be granted and/or if DOE determines that it would be desirable for public policy reasons to grant immediate relief pending a determination on the petition for waiver. 10 CFR 431.401(e)(3). Within one year of issuance of an interim waiver, DOE will either: (i) publish in the **Federal Register** a determination on the petition for waiver; or (ii) publish in the **Federal Register** a new or amended test procedure that addresses the issues presented in the waiver. 10 CFR 431.401(h)(1).

If the interim waiver test procedure methodology is different than the decision and order test procedure methodology, certification reports to DOE required under 10 CFR 429.12 and any representations must be based on either of the two methodologies until 180–360 days after the publication date of the decision and order, as specified by DOE in the decision and order. Thereafter, certification reports and any representations must be based on the decision and order test procedure methodology, unless otherwise specified by DOE. 10 CFR 431.401(i). When DOE amends the test procedure to address the issues presented in a waiver, the waiver will automatically terminate on the date on which use of that test procedure is required to demonstrate compliance. 10 CFR 431.401(h)(2).

II. RSG's Petition for Waiver and Interim Waiver

On February 17, 2022, DOE received from RSG a petition for waiver and interim waiver from the test procedure for walk-in refrigeration systems set forth at 10 CFR part 431 subpart R appendix C. (RSG, No. 1, attachment 1, at pp. 1–3[4]) Pursuant to 10 CFR 431.401(e)(i), DOE posted the petition on the DOE website. The petition did not identify any of the information contained therein as confidential business information.

DOE's current test procedure for walk-in refrigeration systems is codified in appendix C to subpart R of part 431 and incorporates by reference Air-Conditioning, Heating, and Refrigeration Institute (''AHRI'') Standard 1250–2009 (*2009 Standard for Performance Rating of Walk-In Coolers and Freezers,* ''AHRI 1250–2009''), AHRI Standard 420–2008 (*Performance Rating of Forced-Circulation Free-Delivery Unit Coolers for Refrigeration,* ''AHRI 420–2008''), and American Society of Heating, Refrigerating, and Air-Conditioning Engineers (''ASHRAE'') Standard 23.1–2010 (*Methods of Testing for Rating the Performance of Positive Displacement Refrigerant Compressors and Condensing Units that Operate at Subcritical Temperatures of the Refrigerant,* ''ASHRAE 23.1–2010''). AHRI 1250–2009 is the industry test standard for refrigeration systems for

[2] All references to EPCA in this document refer to the statute as amended through the Energy Act of 2020, Public Law 116–260 (Dec. 27, 2020), which reflect the last statutory amendments that impact Parts A and A–1 of EPCA.

[3] For editorial reasons, upon codification in the U.S. Code, Part C was redesignated as Part A–1.

[4] A notation in this form provides a reference for information that is in the docket for this test procedure waiver (Docket No. EERE–2022–BT–WAV–0010–0001) (available at *www.regulations.gov/document/EERE-2022-BT-WAV-0010-0001*). This notation indicates that the statement preceding the reference is from document number 1 in the docket and appears at pages 1–3 of attachment 1 of that document. There are two attachments to document 1 of this docket. Attachment 1 is titled ''DOE Waiver 021722.'' Attachment 2 is titled ''RSG DOE Single Package System Alternate Test Procedure 021522''.

walk-in coolers and freezers, including unit coolers and dedicated condensing units sold separately, as well as matched pairs. The procedure describes the method for measuring the refrigeration capacity and the electrical energy consumption for walk-in refrigeration systems. Using the refrigeration capacity and electrical energy consumption, AHRI 1250–2009 provides a calculation methodology to compute AWEF, the applicable energy-performance metric for refrigeration systems.

In its petition for waiver and interim waiver, RSG presents several ways in which the currently prescribed test procedure would evaluate the specified basic models in a manner so unrepresentative of their true energy consumption as to provide materially inaccurate comparative data. These issues are summarized below.

First, as presented in RSG's petition, the specified basic models of walk-in refrigeration systems are single-packaged dedicated systems that contain multiple refrigeration circuits that operate using a single power feed. (RSG, No. 1, attachment 1, at p. 1) RSG claimed that the specified basic models meet the definition of a single-packaged dedicated system. *Id.* DOE defines a single-packaged dedicated system as ''a single-package assembly that includes one or more compressors, a condenser, a means for forced circulation of refrigerated air, and elements by which heat is transferred from air to refrigerant, without any element external to the system imposing resistance to flow of the refrigerated air''. *See* 10 CFR 431.302. As described by RSG, each refrigeration circuit in the specified basic models is made up of a compressor, expansion device, condenser, and evaporator. (RSG, No. 1, attachment 1, at p. 1) The separate refrigeration circuits may share condenser fans, evaporator fans and a control system. *Id.* In its request for waiver and interim waiver, RSG stated that neither appendix C to subpart R nor AHRI 1250–2009 provide a method for testing a single-packaged dedicated system with multiple refrigeration circuits. *Id.*

Second, RSG stated that the current test procedure requires that the unit under test be set up using a 25-foot line set. *Id.* Section 3.3 of appendix C to subpart R provides the test method for matched systems, single-packaged dedicated systems, and unit coolers tested alone, which references AHRI 1250–2009. Section C5 (Methods of Testing for Walk-In Cooler and Freezer Systems that Have Matched Unit Coolers and Condensing Units) of AHRI 1250–2009 references test setup requirements that include the addition of a line set that includes either one or two mass flow meters. Under Section C5 of AHRI 1250–2009, the gross refrigeration capacity must be determined either by the dual instrumentation refrigerant enthalpy method (Section C5.1.1 of AHRI 1250–2009, Method 1) or by the calibrated box method (Section C5.1.2 of AHRI 1250–2009, Method 2). Both methods require installation of a refrigerant mass flow meter in the system's liquid line to determine the cooling capacity. Section C8.3 and Figure C1 of AHRI 1250–2009 specify the setup and measurements to be conducted for Method 1, for which 25-feet of additional refrigerant line is added to connect the condenser to the evaporator (unit cooler). Within this 25-foot line, two mass flow meters are incorporated, and the heat balance calculated from the two flow measurements must be within ±5 percent. Section C9.2 and Figure C2 of AHRI 1250–2009 specify the setup and measurements for Method 2, in which 26-feet of additional refrigerant line is added to connect the condenser to the unit cooler (as for Method 1), incorporating one mass flow meter. Air-side gross refrigeration capacity and refrigerant-side gross refrigeration capacity are determined and must be equal to within ±5 percent for the test to be considered valid. The 25-foot and 26-foot [5] of additional liquid line and suction line piping used to set up the test is termed a ''line-set''. In its petition for wavier and interim waiver, RSG stated that single-packaged dedicated systems are not intended to be remotely split via a line-set. (RSG, No. 1, attachment 1, at p. 1)

In its request for wavier and interim wavier, RSG noted that DOE has issued test procedure waivers for single-packaged dedicated refrigeration systems using air enthalpy test methods. (RSG, No. 1, attachment 1, at p. 2) DOE granted a waiver to Store It Cold for single-packaged units on August 9, 2019. 84 FR 39286. Store It Cold petitioned for a waiver after determining that the dual instrumentation refrigerant enthalpy method specified in AHRI 1250–2009 was not providing consistent capacity measurements for its single-packaged dedicated systems. 84 FR 39286, 39287. The alternate test procedure associated with this prior waiver required that the specified single-packaged basic models shall be tested using the Indoor Air Enthalpy Method and the Outdoor Air Enthalpy Method in accordance with ASHRAE 37 (*Methods of Testing for Rating Electrically Driven Unitary Air-Conditioning and Heat-Pump Equipment,* ''ASHRAE 37''). 84 FR 39286, 39292. DOE also granted waivers to Air Innovations, CellarPro, Vinotemp, and Vinotheque for walk-in refrigeration systems used in wine cellar applications, for which some of the basic models included in these waivers were single-packaged dedicated systems.[6] The alternate test methods included in these waivers require the specified basic models to be tested in accordance with AHRI 1250–2020, which references the air enthalpy methods in ASHRAE 37 for testing single-packaged dedicated systems.[7] Use of air enthalpy methods for testing a single-packaged dedicated system capture the impact of thermal loss and the infiltration of warm air into the evaporator portion of these systems, which increases the refrigerant load on the system. In its petition for waiver and interim waiver, RSG stated that its laboratory is not set up to conduct air enthalpy testing, and that it would require substantial time and expense to set up its laboratory to conduct air enthalpy testing. (RSG, No. 1, attachment 1, at p. 2) Additionally, RSG explained that it contacted third-party labs to inquire about testing single-packaged dedicated systems using the air enthalpy method, but these labs responded that they are not currently able to conduct air enthalpy testing. *Id.*

Third, in its request for waiver and interim waiver from the DOE test procedure, RSG stated that the current tolerance requirement of 0.5 °F for the on-coil temperature in Section C3.3.3 of AHRI 1250–2009 is unrealistic. *Id.* RSG stated that indoor air temperature tolerances impact the on-coil temperatures and that the test procedure currently prescribes a 1 °F indoor air temperature test condition tolerance.[8] *Id.* RSG therefore suggested that the on-coil temperature tolerance should also be

[5] There is no explanation in AHRI 1250–2009 about why Method 1 requires 25 feet of refrigeration line and Method 2 requires 26 feet of refrigeration line during test set up.

[6] See Waiver Decision and Orders for Air Innovations (86 FR 23702 (May 4, 2021)), CellarPro (86 FR 26496 (May 14, 2021)), Vinotheque (86 FR 26504 (May 14, 2021)), and Vinotemp (86 FR 36732 (July 13, 2021)).

[7] Subsequent to DOE's grant of waiver to Store It Cold, AHRI published an updated version of AHRI 1250 (*i.e.,* AHRI 1250–2020) that provides testing provisions for single-packaged dedicated systems that incorporate by reference the approach used in ASHRAE 37 with some modification.

[8] Test condition tolerance is the maximum allowed deviation of the average of the measurements of a parameter made during a test period as compared with its target value. The indoor air dry-bulb test condition tolerance is specified as 1 °F in Table 2 of AHRI 1250–2009.

1 °F. *Id.* RSG noted further that it can be difficult to repeatedly achieve an on-coil temperature tolerance of 0.5 °F when units are shut down, re-plumbed, and recharged for testing. *Id.*

RSG also requested an interim waiver from the existing DOE test procedure, explaining that if DOE were to deny its application for waiver and interim waiver, it would experience economic hardship in the form of lost sales and/or a significant delay in the distribution into commerce of the specified basic models. *Id.* DOE will grant an interim waiver if it appears likely that the petition for waiver will be granted, and/or if DOE determines that it would be desirable for public policy reasons to grant immediate relief pending a determination of the petition for waiver. 10 CFR 431.401(e)(3).

III. Requested Alternate Test Procedure

EPCA requires that manufacturers use DOE test procedures when making representations about the energy consumption and energy consumption costs of covered equipment. (42 U.S.C. 6314(d)) Consistency is important when making representations about the energy efficiency of covered equipment, including when demonstrating compliance with applicable DOE energy conservation standards. Pursuant to 10 CFR 431.401, and after consideration of public comments on the petition, DOE may establish in a subsequent Decision and Order an alternate test procedure for the basic models addressed by the Interim Waiver Order.

RSG seeks to use an alternate test procedure to test and rate specific walk-in single-packaged dedicated refrigeration system basic models. The alternate test procedure presented by RSG suggested the following revisions to the DOE test procedure that would:

(1) Modify test operating and test condition tolerances in AHRI 1250–2009, which the DOE test procedure references in section 3.1, *General modifications: Test Conditions and Tolerances;*

(2) Remove section 3.2.5 from the DOE test procedure, which provides additional specificity to the refrigerant line setup required in AHRI 1250–2009 section C8.3; and

(3) Create a new section 4 in the DOE test procedure that provides modifications to AHRI 1250–2009 and includes a new approach for testing multiple-circuit single-packaged dedicated systems. Specifically, RSG has suggested an alternate test procedure for testing single-packaged dedicated systems using a modified refrigerant enthalpy approach applied to multiple refrigeration circuits. (RSG, No. 1, attachment 2, at pp. 1–13).

In its request for waiver and interim waiver, RSG suggested testing single-packaged dedicated systems using either a modification of the calibrated box method described in Section C9 of AHRI 1250–2009 or the indoor air enthalpy method (as described in Section C9.1.1 of AHRI 1250–2020) as the primary test method and a new ''single-package refrigerant enthalpy method'' as the secondary test method. (RSG, No. 1, attachment 2, at p. 3) Specifically, RSG recommended the following approach for the new single-package refrigerant enthalpy method:

(1) Instead of using a 25-foot line set with two mass flow meters as specified in the dual instrumentation refrigerant enthalpy method (see Section C8 of AHRI 1250–2009), RSG suggested using only one mass flow meter in the liquid line between the heat exchanger and the expansion device. (RSG, No. 1, attachment 1, at p. 1)

(2) In its alternate test procedure, RSG suggested incorporating the mass flow meter with less than or equal to 5 feet of additional insulated refrigerant line (with piping matching that of the system under test) to the liquid line. *Id.*

(3) The existing suction line would be undisturbed for the test. *Id.*

(4) The added refrigerant charge for the 5 feet of additional liquid line and the mass flow meter would be determined using Section C3.3.3 of AHRI 1250–2009 of the current test procedure. *Id.*

Before disassembling the refrigeration system to set up the refrigerant-side mass flow measurement, a preliminary test at Condition A would be conducted using only a modified calibrated box method or the indoor air enthalpy method. (RSG, No. 1, attachment 1, at p. 3) For this test, surface-mounted temperature sensors would be installed on the evaporator and condenser coils, tubing entering and leaving the compressor, and tubing entering the expansion device. *Id.* To limit the alteration of the refrigerant circuit, the new suggested single-packaged refrigeration enthalpy method would add only 5 feet of tubing to the liquid refrigerant lines (not including the flow length associated with the mass flow meter). (RSG, No. 1, attachment 2, at p. 4) To ensure that the refrigerant circuit modifications (*i.e.,* addition of the mass flow meter and additional liquid line) do not materially alter the system operation, a secondary test would be performed after adding the mass flow meter to confirm that (1) each on-coil temperature sensor indicates a reading that is within ±1 °F of its initial test measurement, (2) the temperatures of the refrigerant entering and leaving the compressor are within ±4 °F of the initial test measurement, and (3) the refrigerant temperature entering the expansion device is within ±1 °F of the initial test measurement. Both the preliminary Condition A test and the secondary test would be additions to the current test procedure and provide a check that the modifications to the refrigeration circuit do not significantly impact the operation of the unit.

The heat balance applied to single-packaged dedicated systems using this method would involve comparison of the air-side net capacity to a net capacity determined based on the refrigerant enthalpy method capacity measurement that would include adjustment for the evaporator fan heat in addition to adjustment for the single-packaged dedicated system thermal loss. The thermal loss would be calculated similarly to the duct loss calculation of Section 7.3.3.3 of ASHRAE 37–2009, in which the heat losses associated with the insulated surface areas subject to heat transfer are summed based on their surface area, thermal resistance (which is based on known insulating material and insulation thickness), and the temperatures on either side of the surface. A test is considered valid if the refrigerant capacities determined by each method are within 6 percent of each other. This approach is generally consistent to the current DOE test procedure, which requires that the capacities determined from two tests are within 5 percent in order for the test to be considered valid.

RSG's suggestion to use the calibrated box method with a single-packaged dedicated system involves mounting the system on the calibrated box, similar to its installation on a walk-in for field use and exchanging air with the box interior to cool it. The exterior of the calibrated box would be conditioned such that the air conditions entering the single-packaged dedicated system's condenser match the targets specified in RSG's suggested revisions to Tables 3, 4, 7 and 8 of AHRI 1250–2009. DOE notes that the table revisions suggested by RSG are consistent with previous single-packaged dedicated system waivers (*see, e.g.,* the Store It Cold waiver, 84 FR 39286, 39291 (August 9, 2019)). The warm condensing unit portion of the single-packaged dedicated system and its condenser discharge air may in some cases add to the thermal load imposed on the calibrated box. Therefore, RSG has suggested additional optional test methods to quantify this additional thermal load on the calibrated box, and to adjust for it when determining system

capacity. The suggested additional test method to determine the additional thermal load calls for box calibration and box load determination to be based on temperature sensors mounted on the box exterior surface rather than by measuring air temperature just outside the box (the approach described for the calibrated box method in Section C9 of AHRI 1250–2009). In addition, requirements for temperature sensor placement to measure the surfaces that may be hot during system operation, and equations for adjustment of the calculated box transmission load contributing to the capacity determination were provided by RSG. (RSG, No. 1, attachment 2, at p. 11)

In its request for waiver and interim waiver, RSG also provided instructions for extending the modified refrigerant enthalpy method of the alternate test procedure to testing multiple-circuit single-packaged dedicated systems. (RSG, No. 1, attachment 2, at p. 9) The approach involves measuring refrigerant mass flow and the enthalpy entering and leaving the evaporator for each refrigeration circuit contained in the unit. The measured mass flow and enthalpy values are used to calculate the gross refrigeration capacity for each circuit. Each circuit's gross capacity is then summed to determine the total gross capacity of the system, which would be adjusted to determine net capacity as described above for testing a single-circuit system.

IV. Interim Waiver Order

DOE has reviewed RSG's application for waiver and interim waiver and the alternate test procedure requested by RSG. Based on the assertions in the petition, the DOE test procedure for walk-in cooler refrigeration systems would evaluate the subject basic models in a manner so unrepresentative of its true energy consumption characteristics as to provide materially inaccurate comparative data.

DOE notes that its current test procedure for walk-in refrigeration systems specifies, through reference to appendix C of AHRI 1250–2009, determining the capacity of the unit under test by using either the dual instrumentation refrigerant enthalpy method (*i.e.,* Method 1 in Section C8 of AHRI 1250–2009) or the calibrated box method (*i.e.,* Method 2 in Section C9 of AHRI 1250–2009). Two capacity measurements are obtained from either Method 1 or Method 2 and the determined capacities must be within ±5 percent of each other for a valid test (see AHRI 1250–2009, Section C8.5.3 for Method 1 and Section C9.4.5 for Method 2). The dual instrumentation refrigerant enthalpy method is routinely used to evaluate the capacity of matched pair, dedicated condensing, and unit cooler systems, but DOE understands that this method is generally considered to be impractical for testing single-packaged dedicated systems. This is primarily because it requires breaking into the liquid refrigerant line within the packaged unit, routing the line outside of the unit to pass through two mass flow meters, and then routing the line back into the unit and through dual pressure and temperature measurements before it rejoins the original liquid line at the expansion device inlet. This method is generally inappropriate for single-packaged dedicated systems because the internal volume of the added liquid line and mass flow meters adds substantially to the required refrigerant charge, and the entire assembly adds substantial pressure drop.[9]

As discussed, RSG's request for waiver and interim waiver stated that the dual instrumentation refrigerant enthalpy method is not appropriate for testing single-packaged dedicated systems because these systems are not designed to have significant additional refrigerant line added between the condenser and evaporator. RSG also stated that the single-packaged dedicated system test methods in AHRI 1250–2020 result in a significant test burden if a testing facility is not currently set up for air enthalpy testing. Therefore, in its suggested alternate test procedure, RSG presented an approach for testing single-packaged dedicated systems using the calibrated box method (Method 2 of AHRI 1250–2009) with modifications that allow a liquid refrigerant line no longer than 5 feet to be incorporated into the existing refrigerant line with a mass flow meter. The method suggested by RSG would make no changes to the vapor refrigeration line. Based on its review of proprietary data from RSG, DOE has initially determined that these changes included in the alternate test procedure recommended by RSG provide a realistic approach for using refrigerant enthalpy to determine the capacity of single-packaged dedicated systems.

The refrigerant enthalpy method does not account for thermal losses, which are specific to single-packaged dedicated systems because the evaporator, rather than being installed entirely inside the cold walk-in box, is housed in an insulated compartment that is externally exposed to warm outdoor air on several sides and to the hot condensing unit compartment on another side. To address this, RSG has adjusted the capacity determined by the new single-package refrigerant enthalpy method to account for thermal losses. Based on its review of RSG's suggested alternate test method, DOE has initially determined that these capacity adjustments result in representative measures of capacity.

In its petition for waiver, RSG specified that the new single-package refrigerant method would be considered a secondary method (*i.e.,* results would be used to ensure the capacity tolerance is met when compared to the capacity determined by a primary test method but would not be used for rating performance). DOE has initially determined that specifying use of the new single-package refrigerant enthalpy method as a secondary method is appropriate since capacity is not directly determined by this method (but rather is estimated through the application of thermal loss adjustments, as described).

The primary test method recommended by RSG in its alternate test procedure is the calibrated box test. Although the calibrated box test is not included in the list of test methods for single-packaged dedicated systems in Table C4 of AHRI 1250–2020, DOE notes that the calibrated box method and the indoor room calorimeter method (from Table C4 of AHRI 1250–2020) are very similar, since the capacity measurement is based on the heat input into a room and the calibrated thermal transmission is achieved through use of a ''box'' or ''room.'' Similarly, the indoor air enthalpy method (from Table C4 of AHRI 1250–2020) captures the capacity actually delivered to the air that conditions the walk-in box. The alternate test methods in the test procedure waivers that DOE previously granted for certain single-packaged dedicated systems rely on the indoor room calorimeter method and the indoor air enthalpy method. Given the similarities between these methods, DOE expects that the calibrated box method will provide capacity measurements that are comparable to those obtained using the indoor air enthalpy method or the indoor room calorimeter method. Because these methods account for the thermal losses associated with single-packaged dedicated systems using direct measurement rather than duct loss calculations, DOE has initially determined that it is appropriate that the calibrated box method would be considered to be the primary test

[9] These issues were the primary motivation for and are described in the Store It Cold petition for waiver. 84 FR 11944, 11946.

method (*i.e.,* the capacity determined from this method would be used for rating purposes).

In its recommended alternate test procedure, RSG recommended a 6 percent tolerance between the proposed calibrated box and new single-package refrigerant enthalpy methods. Based on its review of the alternate test procedure provided by RSG, DOE has initially determined that the alternate test procedure submitted by RSG in its petition for waiver and interim waiver provides representative capacity measurements that result in representative AWEF values for single-packaged dedicated systems.

DOE's current test procedure does not provide a method for testing single-packaged dedicated systems with multiple refrigeration circuits. RSG's suggested alternate test procedure would determine the gross refrigeration capacity for each circuit using the earlier described single-package refrigerant enthalpy method and summing these capacities to determine the total system capacity. Based on DOE's review of the alternate test procedure provided by RSG, DOE has initially determined that this is an appropriate and representative approach for determining the performance of multiple-circuit refrigeration systems.

As previously discussed, RSG's suggested alternate test method would modify the test operating and test condition tolerances in section 3.1 of the DOE test procedure (which references AHRI 1250–2009); remove section 3.2.5 from the DOE test procedure, which provides additional specificity to the refrigerant line setup required in AHRI 1250–2009 section C8.3; and create a new section 4 in the DOE test procedure that provides a detailed method for testing multiple-circuit single-packaged dedicated systems. After review, DOE has initially determined that it will specify an alternate test procedure that generally follows the same approach as that recommended by RSG for the interim waiver test procedure, but with one modification, as described follows.

The alternate test procedure submitted by RSG includes suggested revisions to AHRI 1250–2009. However, DOE notes that there is one inconsistency between RSG's alternate test procedure and AHRI 1250–2020. Specifically, the alternate test procedure suggested by RSG modifies Table 7 of AHRI 1250–2009 (Fixed Capacity Matched Freezer System, Condensing Unit Located Indoors) to require the condenser air entering wet-bulb temperature to be 68 °F for single-packaged dedicated systems that do not use evaporative dedicated condensing units, for which all or part of the equipment is located in the outdoor room. (RSG, No. 1, attachment 2, at p. 1) However, Table 8 of AHRI 1250–2020 requires that the condenser air entering wet-bulb temperature must be 65 °F for single-packaged dedicated systems that do not use evaporative dedicated condensing units, for which all or part of the equipment is located in the outdoor room. DOE has modified the condensing air entering wet-bulb temperature in Table 7 of RSG's recommended alternate test procedure to be 65 °F (rather than 68 °F as suggested by RSG) in order to maintain consistency with the requirements in Table 8 of AHRI 1250–2020.

DOE has initially determined that the alternate test procedure (as modified in the manner noted), appears to allow for the accurate measurement of the energy efficiency of the specified basic models, while alleviating the testing problems cited by RSG in its attempts to implement the DOE test procedure for these basic models. Consequently, DOE has determined that RSG's petition for waiver, with the modification as described in this section, likely will be granted. Furthermore, DOE has determined that it is desirable for public policy reasons to grant RSG immediate relief pending a determination of the petition for waiver.

For the reasons stated, it is *ordered* that:

(1) RSG must test and rate the following Norlake and Masterbilt basic models with the alternate test procedure set forth in paragraph (2).

Cooler basic models	Freezer basic models
CPB050PC–S–0	CPF050PC–S–0
CPB075PC–S–0	CPF075PC–S–0
CPB100PC–S–0	CPF100PC–S–0
	CPF150PC–S–4
	CPF200PC–S–4

(2) The alternate test procedure for the RSG basic models identified in paragraph (1) of this Interim Waiver Order is the test procedure for walk-in refrigeration systems prescribed by DOE at 10 CFR part 431, subpart R, appendix C (''Appendix C to Subpart R''), except that multiple circuit single-packaged dedicated systems shall use: (1) either the calibrated box method or an indoor air enthalpy test as the primary test method, as detailed below; (2) the modified refrigerant enthalpy method as the secondary test method, as detailed below; (3) the net capacity from the primary and secondary test methods must agree within ±6 percent, as detailed below; and (4) reported values for the overall system shall be the summation of the gross capacities obtained from the modified refrigerant enthalpy method conducted for each refrigeration circuit included in the unit under test, as detailed below. All other requirements of appendix C to subpart R and DOE's regulations remain applicable.

In Appendix C to Subpart R:

Revise section 3.1.1 to read as follows:

3.1.1. In Table 1 of AHRI 1250–2009, Instrumentation Accuracy, refrigerant temperature measurements shall have a tolerance of ±0.5 °F for unit cooler in/out. Temperature measurements used to determine water vapor content of the air shall be accurate to within ±0.4 °F. All other temperature measurements shall be accurate to ±1.0 °F.

Revise section 3.1.4 to read as follows:

3.1.4. In Tables 2 through 14 of AHRI 1250–2009, the Test Condition Outdoor Wet Bulb Temperature requirement and its associated tolerance apply only to units with evaporative cooling and single-packaged dedicated systems.

Insert new section 3.1.6 as follows:

3.1.6 Tables 3, 4, 7 and 8 of AHRI 1250–2009 shall be modified to read as follows:

TABLE 3—FIXED CAPACITY MATCHED REFRIGERATOR SYSTEM, CONDENSING UNIT LOCATED INDOOR

Test description	Unit cooler air entering dry-bulb (°F)	Unit cooler air entering relative humidity (%)	Condenser air entering dry-bulb (°F)	Condenser air entering wet-bulb (°F)	Compressor capacity	Test objective
Off Cycle Fan Power	35	<50			Compressor Off	Measure fan input wattage during compressor off cycle.

TABLE 3—FIXED CAPACITY MATCHED REFRIGERATOR SYSTEM, CONDENSING UNIT LOCATED INDOOR—Continued

Test description	Unit cooler air entering dry-bulb (°F)	Unit cooler air entering relative humidity (%)	Condenser air entering dry-bulb (°F)	Condenser air entering wet-bulb (°F)	Compressor capacity	Test objective
Refrigeration Capacity	35	<50	90	[1] 75 or [2] 65	Compressor On	Determine Net Refrigeration Capacity of Unit Cooler, input power, and EER at Rating Condition.

[1] Required only for evaporative Dedicated Condensing Units.
[2] Maximum allowable value for Single-Packaged Dedicated Systems that do not use evaporative Dedicated Condensing Units, where all or part of the equipment is located in the outdoor room.

TABLE 4—FIXED CAPACITY MATCHED REFRIGERATOR SYSTEM, CONDENSING UNIT LOCATED OUTDOOR

Test description	Unit cooler air entering dry-bulb (°F)	Unit cooler air entering relative humidity (%)	Condenser air entering dry-bulb (°F)	Condenser air entering wet-bulb (°F)	Compressor capacity	Test objective
Off Cycle Fan Power	35	<50			Compressor Off	Measure fan input wattage during compressor off cycle.
Refrigeration Capacity A	35	<50	95	[1] 75 or [2] 68	Compressor On	Determine Net Refrigeration Capacity of Unit Cooler, input power, and EER at Rating Condition.
Refrigeration Capacity B	35	<50	59	[1] 54 or [2] 46	Compressor On	Determine Net Refrigeration Capacity of Unit Cooler, and system input power at moderate condition.
Refrigeration Capacity C	35	<50	35	[1] 34 or [2] 29	Compressor On	Determine Net Refrigeration Capacity of Unit Cooler, and system input power at cold condition.

[1] Required only for evaporative Dedicated Condensing Units.
[2] Maximum allowable value for Single-Packaged Dedicated Systems that do not use evaporative Dedicated Condensing Units, where all or part of the equipment is located in the outdoor room.

TABLE 7—FIXED CAPACITY MATCHED FREEZER SYSTEM, CONDENSING UNIT LOCATED INDOOR

Test description	Unit cooler air entering dry-bulb (°F)	Unit cooler air entering relative humidity (%)	Condenser air entering dry-bulb (°F)	Condenser air entering wet-bulb (°F)	Compressor capacity	Test objective
Off Cycle Fan Power	−10	<50			Compressor Off	Measure fan input wattage during compressor off cycle.
Refrigeration Capacity	−10	<50	90	[1] 75 or [2] 65	Compressor On	Determine Net Refrigeration Capacity of Unit Cooler, input power, and EER at Rating Condition.
Defrost Frost Load	−10	Various	90	[1] 75 or [2] 65	System Dependent	Test according to Section C11 of AHRI 1250–2009.

[1] Required only for evaporative Dedicated Condensing Units.
[2] Maximum allowable value for Single-Packaged Dedicated Systems that do not use evaporative Dedicated Condensing Units, where all or part of the equipment is located in the outdoor room.

TABLE 8—FIXED CAPACITY MATCHED FREEZER SYSTEM, CONDENSING UNIT LOCATED OUTDOOR

Test description	Unit cooler air entering dry-bulb (°F)	Unit cooler air entering relative humidity (%)	Condenser air entering dry-bulb (°F)	Condenser air entering wet-bulb (°F)	Compressor capacity	Test objective
Off Cycle Fan Power	−10	<50			Compressor Off	Measure fan input wattage during compressor off cycle.
Refrigeration Capacity A	−10	<50	95	[1] 75 or [2] 68	Compressor On	Determine Net Refrigeration Capacity of Unit Cooler, input power, and EER at Rating Condition.
Refrigeration Capacity B	−10	<50	59	54[1] or [2] 46	Compressor On	Determine Net Refrigeration Capacity of Unit Cooler, input power, and EER at Rating Condition.

TABLE 8—FIXED CAPACITY MATCHED FREEZER SYSTEM, CONDENSING UNIT LOCATED OUTDOOR—Continued

Test description	Unit cooler air entering dry-bulb (°F)	Unit cooler air entering relative humidity (%)	Condenser air entering dry-bulb (°F)	Condenser air entering wet-bulb (°F)	Compressor capacity	Test objective
Refrigeration Capacity C	−10	<50	35	[1] 34 or [2] 29	Compressor On	Determine Net Refrigeration Capacity of Unit Cooler, input power, and EER at Rating Condition.
Defrost Frost Load	−10	Various	95	[1] 75 or [2] 68	System Dependent	Test according to Section C11 of AHRI 1250–2009.

[1] Required only for evaporative Dedicated Condensing Units.
[2] Maximum allowable value for Single-Packaged Dedicated Systems that do not use evaporative Dedicated Condensing Units, where all or part of the equipment is located in the outdoor room.

Remove section 3.2.5.

Add a new section 4, following section 3.5 *Hot Gas Defrost Refrigeration Systems*

4.0 Multiple-Circuit Single-Packaged Dedicated Systems

When conducting testing in accordance with AHRI 1250–2009 (incorporated by reference; see 10 CFR 431.303), the following modifications must be made.

4.1 Specific modifications: Test Conditions and Tolerance

4.1.1 Replace Section C3.1.2 of AHRI 1250–2009 with the following: Air wet-bulb and dry-bulb temperatures entering the Single-Packaged Dedicated System at its evaporator return and condenser air inlet shall be measured based on the airflow area at the point of measurement. One measuring station is required for each 2.0 ft^2 of the first 10.0 ft^2 of airflow area and one additional measuring station is required for each 4.0 ft^2 of airflow area above 10.0 ft^2. A minimum of two stations shall be used and the number of measuring stations shall be rounded up to the next whole number.

4.1.2 Replace Section C3.1.5 of AHRI 1250–2009 with the following: If sampling tubes are used, each tube opening may be considered a temperature measuring station provided the openings are uniformly spaced along the tube, the airflow rates entering each port are relatively uniform (±15%) and the arrangement of tubes complies with the location requirements of Section C3.1.2 of AHRI 1250–2009. Additionally, a one-time temperature traverse shall be made over the measurement surface, prior to the tests to assess the temperature variation and ensure it complies with the allowable deviation specified in Section C3.1.4 of AHRI 1250–2009. (Refer to ANSI/ASHRAE Standard 41.1 for more information and diagrams). If sampling tubes are not used for single-packaged dedicated systems that do not use evaporative dedicated condensing units, a single air wet-bulb or RH sensor may be used. When used, this sensor shall be located at the geometric center of the largest condenser coil face and 6–12 inches from the condenser coil.

4.1.3 Replace Section 3.1.6 of AHRI 1250–2009 with the following: Refrigerant temperatures entering and leaving the evaporator section of the Single-Packaged Dedicated System shall be measured by a temperature measuring instrument placed in a thermometer well and inserted into the refrigerant stream. These wells shall be filled with non-solidifying, thermal conducting liquid or paste to ensure the temperature sensing instrument is exposed to a representative temperature. The entering temperature of the refrigerant shall be measured within six pipe diameters upstream of the expansion device. If the refrigerant tube outer diameter is less than ½-inch, the refrigerant temperature may be measured using the average of two temperature measuring instruments with a minimum accuracy of ±0.5 °F placed on opposite sides of the refrigerant tube surface. In this case, the refrigerant tube shall be insulated with 1-inch-thick insulation from a point 6 inches upstream of the measurement location to a point 6 inches downstream of the measurement location. Also, the entering measurement location may be moved to a location 6 inches upstream of the expansion device.

4.2 Refrigerant Properties Measurement

4.2.1 Replace Section C3.3.1 of AHRI 1250–2009 with the following: With the equipment operating at the desired test conditions, the temperature and pressure of the refrigerant leaving the unit cooler, entering the expansion device, and entering and leaving the compressor shall be measured. For cases where the calibrated box method or indoor air enthalpy method is also conducted, data used to calculate capacity according to the single-package refrigerant enthalpy method and the additional method shall be collected over the same intervals.

4.2.2 Replace Section C3.3.3 of AHRI 1250–2009 with the following: For Single-Packaged Dedicated Systems tested using either the calibrated box method or the indoor air enthalpy method as the primary measurement and the single-package refrigerant enthalpy method as the secondary method, a preliminary test for Rating Condition A using the primary method is required prior to setting up the refrigerant enthalpy method measurements. In preparation for this preliminary test, temperature sensors shall be attached to the equipment's evaporator and condenser coils. The sensors shall be located at points that are not affected by vapor superheat or liquid subcooling. Placement near the midpoint of the coil, at a return bend, is recommended. The preliminary test shall be conducted with the requirement that the temperatures of the on-coil sensors be included with the regularly recorded data. After the preliminary test is completed, the refrigerant shall be removed from the equipment, and the refrigerant enthalpy measurement setup shall be completed. The equipment shall be evacuated and recharged with refrigerant. The test shall then be repeated. Once steady-state operation is achieved, refrigerant shall be added or removed until, as compared to the average values from the preliminary test, the following conditions are achieved: (1) each on-coil temperature sensor indicates a reading that is within ±1.0 °F, (2) the temperatures of the refrigerant entering and leaving the compressor are within ±4.0 °F, and (3) the refrigerant temperature entering the expansion device is within ±1.0 °F. Once these conditions have been achieved over an interval of at least ten minutes, refrigerant charging equipment

shall be removed, and the remaining tests shall be conducted.

4.2.3 When conducting the refrigerant enthalpy method for a Single-Packaged Dedicated System, the length of the added liquid line conducting refrigerant out of the system, to the flow meter, and back into the system shall be no more than 5 feet. No such modification to the suction line shall be made.

4.3 Methods for Testing for Walk-In Cooler and Freezer Systems That Have Matched Unit Coolers and Condensing Units

Disregard Section C5 of AHRI 1250–2009 and instead test according to the following method:

4.3.1 The Refrigeration Capacity for Single-Packaged Dedicated Systems shall be determined using either the Calibrated Box method or the Indoor Air Enthalpy method as a primary test method and the Single-Package Refrigerant Enthalpy method as the secondary test method.

4.3.1.1 Single-Package Refrigerant Enthalpy method shall determine gross refrigeration capacity by measuring the enthalpy change and the mass flow rate of the refrigerant using a single set of measurements.

4.3.1.2 Calibrated Box method shall determine net refrigeration capacity by measuring the heat input to the calibrated box, including thermal transfer through the calibrated box walls.

4.3.2 Indoor Air Enthalpy method shall determine net refrigeration capacity of Single-Packaged Dedicated System and input power in accordance with ASHRAE 37–2009, Figure C4 of AHRI 1250–2020, and the following modifications.

4.3.2.1 Net refrigeration capacity is determined by measuring airflow rate and the dry-bub temperature and water vapor content of the air that enters and leaves the coil.

4.3.2.2 Air enthalpies shall be determined in accordance with ANSI/ASHRAE 41.6. Entering air is to be sufficiently dry as to not produce frost on the evaporator coil. Therefore, only sensible capacity measured by dry bulb change shall be used to calculate capacity.

4.3.3 Testing Sequence. The primary test method shall be used to measure the capacity for Rating Condition A prior to set-up of the Single-Package Refrigerant Enthalpy Measurement. After set-up of the Refrigerant Enthalpy method, the Net Capacity shall be measured using both the primary test method and the Refrigerant Enthalpy method. The Net Capacity measurement using the Refrigerant Enthalpy method shall be within 6 percent of the net capacity measurement using the primary method.

If a capacity balance within tolerance is not initially achieved, take steps to reduce the thermal losses of the Single-Packaged Dedicated System evaporator compartment by sealing air gaps and potentially adding more external insulation. If using the Calibrated Box method as the primary method, achieving a capacity balance may require conducting the calibration with calibrated box insulation material at the same average temperature as during capacity measurement, or using multiple calibrations conducted at different average insulation material temperatures and using these data to construct a correlation for the calibration coefficient, K_{cb}, as a function of average insulation temperature. The official performance measurements are based on the primary method testing without any air gap sealing and additional external insulation used to achieve the 6 percent energy balance in place.

4.3.4 The refrigerant enthalpy method Net Capacity shall be calculated from the Gross Capacity Measurement as follows.

$$\dot{q}_{ss,2} = \dot{Q}_{ref} - 3.412 \times \dot{E}F_{comp,on} - \dot{Q}_{sploss}$$

Where $\dot{Q}_{sploss}$ represents the Single-Packaged Dedicated System thermal losses through the walls of the evaporator side of the Single-Packaged Dedicated System to the condenser side and to the exterior ambient, and shall be calculated as follows.

$$\dot{Q}_{sploss} = UA_{cond} \times (T_{condside} - T_{evapside}) + UA_{amb} \times (T_{amb} - T_{evapside})$$

Where:

UA_{cond} and UA_{amb} are, for the condenser/evaporator partition and the evaporator compartment walls exposed to ambient air, respectively, the product of the overall heat transfer coefficient and surface area of the unit as manufactured, *i.e.,* without external insulation that might have been added during the test;

$T_{evapside}$ is the air temperature in the evaporator compartment;

$T_{condside}$ is the air temperature in the condenser compartment; and

T_{amb} is the air temperature outside the Single-Packaged Dedicated System.

The Net Capacity to be used in AWEF calculations shall be the net capacity measured using the primary method.

4.3.5 Upon the completion of the Rating Condition A steady state test, an off-cycle evaporator fan power test shall be conducted to measure the evaporator fan power consumption during a compressor-off period in accordance with Section C10 of AHRI 1250–2009.

4.3.6 Upon the completion of the Rating Condition A steady state test for walk-in freezer systems, a mandatory defrost test shall be conducted to establish the energy input for a defrost cycle.

4.3.7 Upon the completion of the Rating Condition A steady state test, off-cycle evaporator fan power test, and defrost test (for walk-in freezer systems), the Rating Condition B and C steady state tests shall be conducted. Capacity balance as described in Section C9.2 of AHRI 1250–2020 for Rating Condition A is not required for Rating Conditions B and C.

4.4 Test Chamber Requirements

Disregard Section C6 of AHRI 1250–2009 and instead test according to the following method:

4.4.1 For single-packaged dedicated systems, test chamber requirements shall be as follows:

a. For the calibrated box method, follow ASHRAE 16–2016, Section 6.1 for calibrated type calorimeters excluding water and water energy inputs for the indoor-side compartment.

b. For the indoor air enthalpy method, follow ASHRAE 37–2009.

4.5 Single-Packaged Dedicated System Refrigerant Enthalpy Method

4.5.1 General Description. In this method, capacity is determined from the refrigerant enthalpy change and flow rate. Enthalpy changes are determined from measurements of entering and leaving pressures and temperatures of the refrigerant, and the flow rate is determined by a suitable flow meter in the liquid line. This method shall not be used for tests in which the refrigerant liquid leaving the flow meter is subcooled less than 3.0 °F or for tests in which any instantaneous measurement of the superheat of the vapor leaving the evaporator coil is less than 5.0 °F. Supplementary cooling may be artificially provided for the liquid line to ensure enough subcooling when making measurements to establish the capacity balance for Rating Condition A, however, no official measurements used to calculate AWEF may be made while providing such supplementary cooling.

4.5.2 Measurements. Refer to Section 4.1 of this appendix and Section C3 of AHRI 1250–2009 for requirements of air-side and refrigerant-side measurements.

4.5.3 Test Setup and Procedure. Refer to Section 4.4 of this appendix, Section C7 of AHRI 1250–2009, and Figure C3 of this section for specific test setup. The lengths of the added liquid line shall be a maximum of 5 feet.

BILLING CODE 6450–01–P

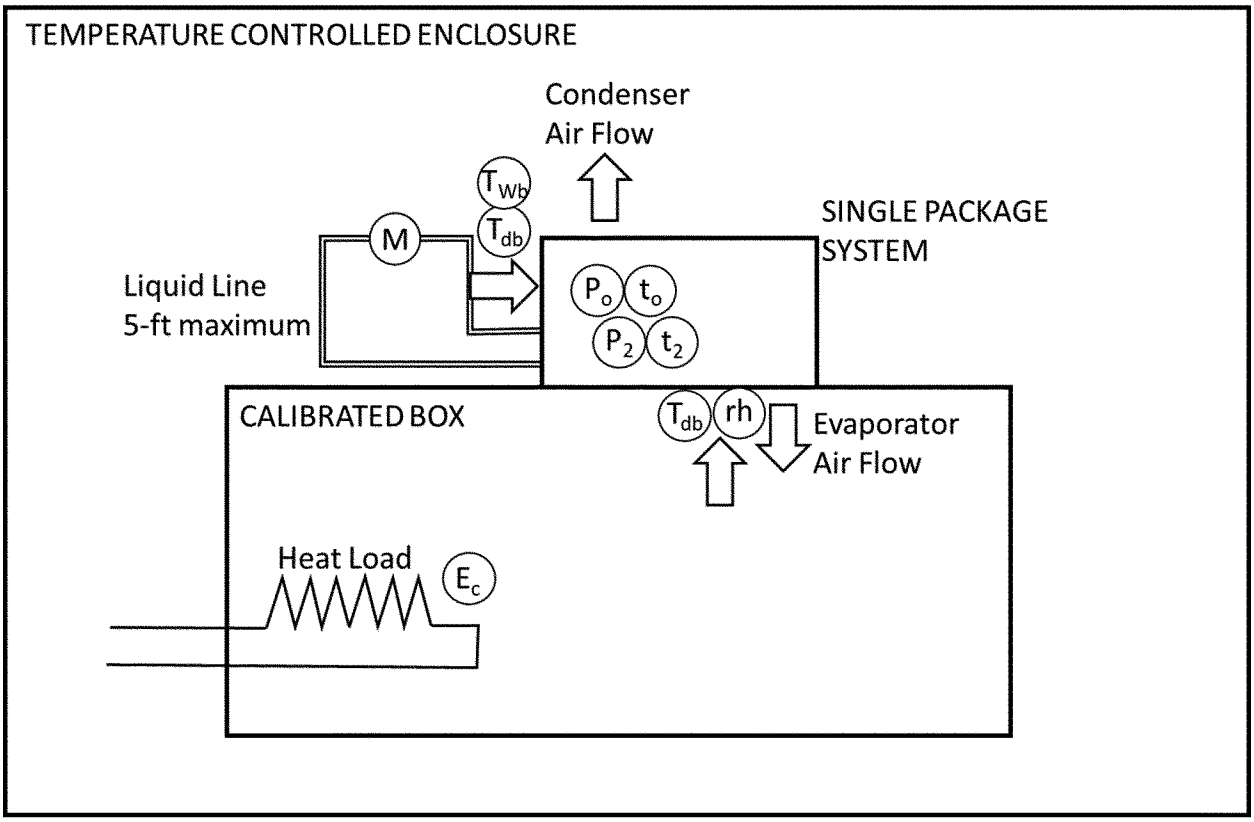

LEGEND	
M	Mass Flow Meter
T_{db} T_{Wb}	Air Temperature Measurement Station
rh	Air Relative Humidity Measurement
P	Refrigerant Pressure Measurement
t	Refrigerant Temperature Measurement Station
E_c	Heat Load Input Power

Figure C3: Calibrated Box and Single-package Refrigerant Enthalpy Method

4.5.4 Data to be Measured and Recorded. Refer to ''Refrigerant Enthalpy Method'' in Table C2 in Section C7.2 of AHRI 1250–2009 for the required data that need to measured and recorded, except as follows.

4.5.4.1 Water vapor content of air entering the unit cooler (evaporator) and condensing unit may be measured using a wet bulb temperature measurement or a relative humidity sensor, but both are not required.

4.5.4.2 Wet bulb temperature of air leaving the unit cooler (evaporator) and condensing unit need not be measured.

4.5.4.3 Required refrigerant pressure measurement includes only subcooled liquid entering the expansion valve and superheated vapor exiting the unit cooler (evaporator).

4.5.4.4 Only one refrigerant mass flow measurement is required.

4.5.4.5 Measurement of Refrigerant oil flow rate and oil/refrigerant mass ratio are not required.

4.5.5 Refrigeration Capacity Calculation.

4.5.5.1 The refrigerant-side gross capacity is calculated by

$$\dot{Q}_{ref} = \dot{m}_{ref}(h_{out} - h_{in})$$

4.5.5.2 Measurement of Capacity for a Single-Packaged Dedicated System with Multiple Refrigeration Circuits.

For a Single-Packaged Dedicated System with multiple refrigeration circuits, apply the refrigerant enthalpy method separately for each circuit and sum the separately measured gross refrigeration capacities.

4.6 Calibrated Box Test Procedure

4.6.1 Measurements. Refer to Section 4.1 of this section and Section C3 of AHRI 1250–2009 for requirements of air-side and refrigerant-side measurements.

4.6.2 Apparatus setup for Calibrated Box Calibration and Test. Refer to Section 4.4 of this section, Section C7 of AHRI 1250–2009, and Figure C4 of this section for specific test setup.

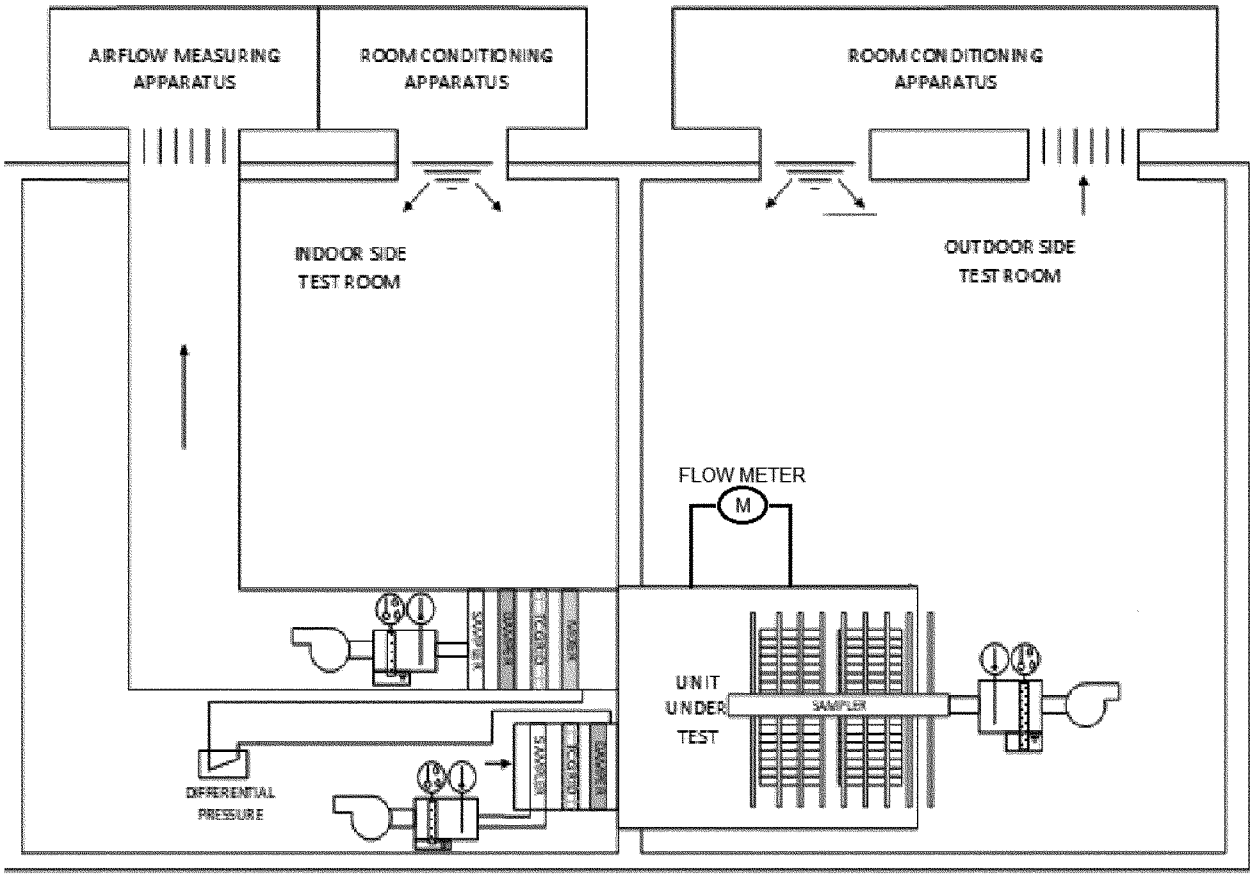

Figure C4: Indoor Air Enthalpy and Single-package Refrigerant Enthalpy Method

4.6.2.1 The calibrated box shall be installed in a temperature-controlled enclosure in which the temperature can be maintained at a constant level. When using the calibrated box method for Single-Packaged Dedicated Systems, the enclosure air temperature shall be maintained such that the condenser air entering conditions are as specified for the test.

4.6.2.2 The temperature-controlled enclosure shall be of a size that will provide clearances of not less than 18 inches on all sides, top and bottom, except that clearance of any one surface may be reduced to not less than 5.5 inches.

4.6.2.3 The heat leakage of the calibrated box shall be noted in the test report.

4.6.2.4 Refrigerant lines within the calibrated box shall be well insulated to avoid appreciable heat loss or gain.

4.6.2.5 Instruments for measuring the temperature around the outside of the calibrated box to represent the enclosure temperature T_{en} shall be located at the center of each wall, ceiling, and floor.

Exception: in the case where a clearance around the outside of the calibrated box, as indicated above, is reduced to less than 18 inches, the number of temperature-measuring devices on the outside of that surface shall be increased to six, which shall be treated as a single temperature to be averaged with the temperature of each of the other five surfaces. There will be six rectangular sections of equal area, and each of these six sections will have a temperature-measuring instrument located at its center. If the refrigeration system is mounted at the location that would cover the center of the face on which it is mounted, up to four temperature measurements shall be used on that face to represent its temperature. Each sensor shall be aligned with the center of the face's nearest outer edge and centered on the distance between that edge and the single-packaged unit (this is illustrated in Figure C5 when using surface temperature sensors), and they shall be treated as a single temperature to be averaged with the temperature of each of the other five surfaces. However, any of these sensors shall be omitted if either (a) the distance between the outer edge and the single packaged unit is less than one foot or (b) if the sensor location would be within two feet of any of the foot-square surfaces discussed below representing a warm discharge air impingement area. In this case, the remaining sensors shall be used to represent the average temperature for the surface.

One of the following two approaches shall be used for the box external temperature measurement. Box calibration and system capacity measurement shall both be done using the same one of these approaches.

4.6.2.5.1 Air temperature sensors. Each temperature sensor shall be at a distance of 6 inches from the calibrated box. If the clearance from a surface of the box (allowed for one surface only) is less than 12 inches, the temperature measuring instruments shall be located midway between the outer wall of the calibrated box and the adjacent surface.

4.6.2.5.2 Surface temperature sensors. Surface temperature sensors shall be mounted on the calibrated box surfaces to represent the enclosure temperature, T_{en}.

Additional surface temperature sensors may be used to measure external hot spots during refrigeration system testing. If this is done, two temperature sensors shall be used to measure the average temperature of the calibrated box surface covered by the condensing section—they shall be centered on equal-area rectangles comprising the covered calibrated box surface whose common sides span the short dimension of this surface. Additional surface temperature sensors may be used to measure box surfaces on which warm condenser discharge air impinges. A pattern of square surfaces, with each surface measuring one foot square, shall be mapped out to represent the hot spot upon which the warm condenser air impinges. One temperature sensor shall be used to measure surface temperature at the center of each square (see Figure C5 of this section). A drawing showing this pattern and identifying the surface temperature sensors shall be provided in the test report. The average surface temperature of the overall calibrated box outer surface during testing shall be calculated as follows.

$$T_{en} = \frac{\sum_{i=1}^{6} A_i T_i + \sum_{j=1}^{2} A_j \left(T'_j - T_1\right) + \sum_{k=1}^{n} A_k \left(T''_k - T_1\right)}{\sum_{i=1}^{6} A_i}$$

Where:

A_i is the surface area of the ith of the six calibrated box surfaces;

T_i is the average temperature measured for the ith surface;

A_j is half of the surface area of the calibrated box covered by the condensing section;

T'_j is the jth of the two temperature measurements underneath the condensing section;

T_1 is the average temperature of the four or fewer measurements representing the temperature of the face on which the single-packaged system is mounted, prior to adjustments associated with hot spots based on measurements T_j and/or T_k;

A_k is the area of the kth of n 1-square-foot surfaces used to measure the condenser discharge impingement area hot spot; and

T''_k is the kth of the n temperature measurements of the condenser discharge impingement area hot spot.

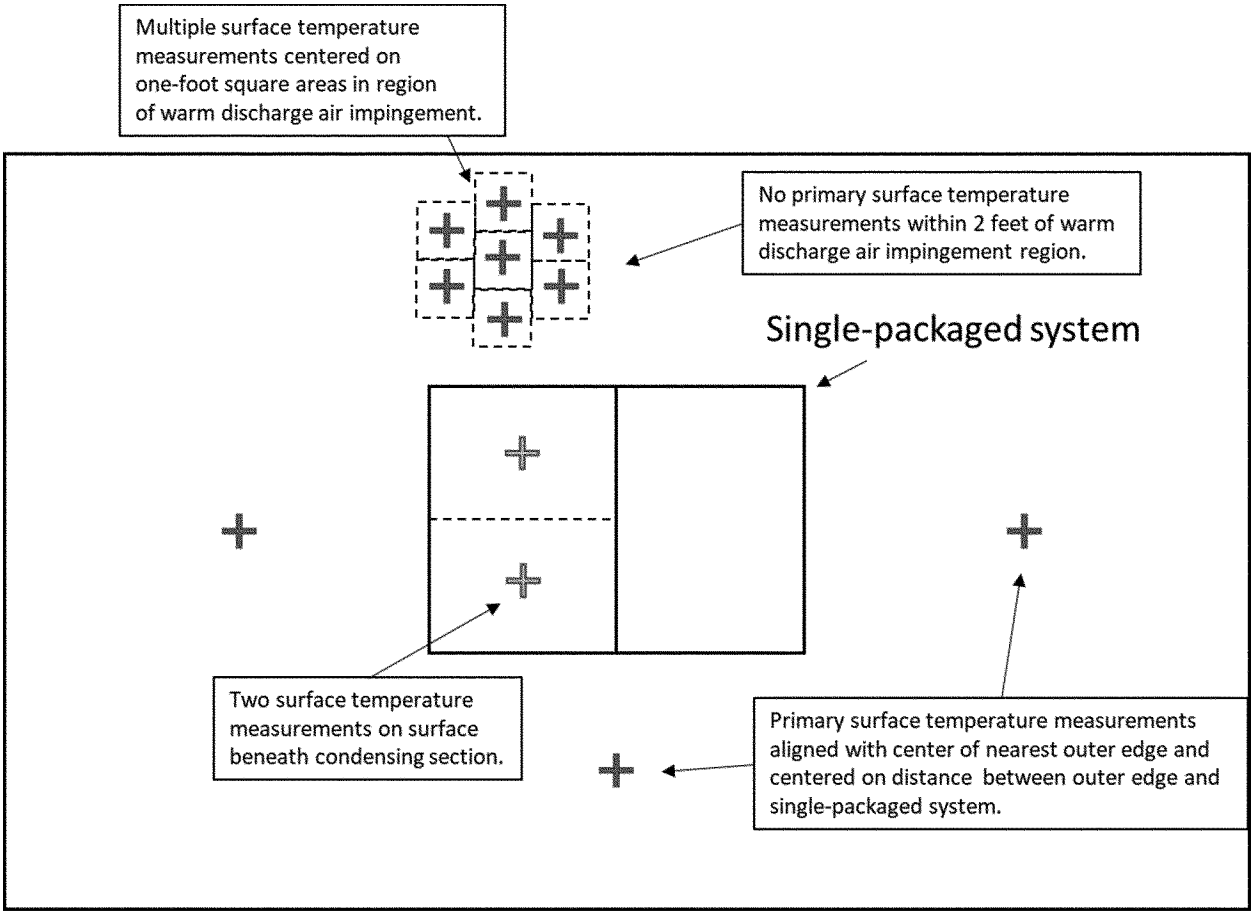

Figure C5: Illustration of Layout of Surface Temperature Sensors on Face of Calibrated Box on which Single-Packaged System is Mounted when Using Section 4.6.2.5.2 of 10 CFR 431 Subpart R, Appendix C.

BILLING CODE 6450–01–C

4.6.2.6 Heating means inside the calibrated box shall be shielded or installed in a manner to avoid radiation to the Single-Packaged Dedicated System, the temperature measuring instruments, and to the walls of the box. The heating means shall be constructed to avoid stratification of temperature, and suitable means shall be provided for distributing the temperature uniformly.

4.6.2.7 The average air dry-bulb temperature in the calibrated box during Single-Packaged Dedicated System tests and calibrated box heat leakage tests shall be the average of eight temperatures measured at the corners of the box at a distance of 2 inches to 4 inches from the walls. The instruments shall be shielded from any cold or warm surfaces except that they shall not be shielded from the adjacent walls of the box. The Single-Packaged Dedicated System under test shall be mounted such that the temperature instruments are not in the direct air stream from the discharge of the Single-Packaged Dedicated System.

4.6.3 Calibration of the Calibrated Box. Calibration of the Calibrated Box shall occur prior to installation of the Single-Packaged Dedicated System. This shall be done either (a) prior to cutting the opening needed to install the Single-Packaged Dedicated System, or (b) with an insulating panel with the same thickness and thermal resistance as the box wall installed in the opening intended for the Single-Packaged Dedicated System installation. Care shall be taken to avoid thermal shorts in the location of the opening either during calibration or during subsequent installation of the Single-Packaged Dedicated System. A calibration test shall be made for air movements comparable to those expected for Single-Packaged Dedicated System capacity measurement, *i.e.,* with air volume flow rate within 10 percent of the air volume flow rate of the Single-Packaged Dedicated System evaporator.

4.6.3.1 The heat input shall be adjusted to maintain an average box temperature not less than 25.0 °F above the test enclosure temperature.

4.6.3.2 The average dry-bulb temperature inside the calibrated box shall not vary more than 1.0 °F over the course of the calibration test.

4.6.3.3 A calibration test shall be the average of eleven consecutive hourly

readings when the box has reached a steady-state temperature condition.

4.6.3.4 The box temperature shall be the average of all readings after a steady-state temperature condition has been reached.

4.6.3.5 The calibrated box has reached a steady-state temperature condition when:

4.6.3.5.1 The average box temperature is not less than 25.0 °F above the test enclosure temperature.

4.6.3.5.2 Temperature variations do not exceed 5.0 °F between temperature measuring stations.

4.6.3.5.3 Temperatures do not vary by more than 2.0 °F at any one temperature-measuring station.

4.6.4 Data to be Measured and Recorded. Refer to Table C2 in Section C7.2 of AHRI 1250–2020 for the required data that need to measured and recorded.

4.6.5 Refrigeration Capacity Calculation.

4.6.5.1 The heat leakage coefficient of the calibrated box is calculated by

$$K_{cb} = \frac{3.412 \times \dot{E}_c}{T_{en} - T_{cb}}$$

4.6.5.2 For each Dry Rating Condition, calculate the Net Capacity by using the following:

$\dot{q}_{ss} = K_{cb}(T_{en} - T_{cb}) + 3.412 \times \dot{E}_c$

(3) *Representations.* RSG may not make representations about the efficiency of a basic model listed in paragraph (1) of this Interim Waiver Order for compliance, marketing, or other purposes unless that basic model has been tested in accordance with the provisions set forth in this alternate test procedure and such representations fairly disclose the results of such testing.

(4) This Interim Waiver Order shall remain in effect according to the provisions of 10 CFR 431.401(h).

(5) This Interim Waiver Order is issued on the condition that the statements and representations provided by RSG are valid. If RSG makes any modifications to the controls or configurations of a basic model subject to this Interim Waiver Order, such modifications will render the waiver invalid with respect to that basic model, and RSG will either be required to use the current Federal test method or submit a new application for a test procedure waiver. DOE may rescind or modify this waiver at any time if it determines the factual basis underlying the petition for the Interim Waiver Order is incorrect, upon a determination that the results from the alternate test procedure are unrepresentative of a basic model's true energy consumption characteristics, or for other appropriate reasons. 10 CFR 431.401(k)(1). Likewise, RSG may request that DOE rescind or modify the Interim Waiver Order if RSG discovers an error in the information provided to DOE as part of its petition, determines that the interim waiver is no longer needed, or for other appropriate reasons. 10 CFR 431.401(k)(2).

(6) Issuance of this Interim Waiver Order does not release RSG from the applicable requirements set forth at 10 CFR part 429.

DOE makes decisions on waivers and interim waivers for only those basic models specifically set out in the petition, not future models that may be manufactured by the petitioner. RSG may submit a new or amended petition for waiver and request for grant of interim waiver, as appropriate, for additional basic models of single-packaged dedicated systems with multiple refrigeration circuits. Alternatively, if appropriate, RSG may request that DOE extend the scope of a waiver or an interim waiver to include additional basic models employing the same technology as the basic model(s) set forth in the original petition consistent with 10 CFR 431.401(g).

Signing Authority

This document of the Department of Energy was signed on July 18, 2022, by Kelly J. Speakes-Backman, Principal Deputy Assistant Secretary for Energy Efficiency and Renewable Energy, pursuant to delegated authority from the Secretary of Energy. That document with the original signature and date is maintained by DOE. For administrative purposes only, and in compliance with requirements of the Office of the Federal Register, the undersigned DOE Federal Register Liaison Officer has been authorized to sign and submit the document in electronic format for publication, as an official document of the Department of Energy. This administrative process in no way alters the legal effect of this document upon publication in the **Federal Register**.

Signed in Washington, DC, on July 19, 2022

Treena V. Garrett,

Federal Register Liaison Officer, U.S. Department of Energy.

February 17, 2022

U.S. Department of Energy
Building Technologies Program, Test Procedure Waiver
1000 Independence Avenue SW, Mailstop EE–SB
Washington, DC 20585–0121

Re: Notice of petition for an alternate test procedure waiver and interim waiver. Request for public comment.

Norlake, Inc., dba Refrigerated Solutions Group (RSG), respectfully requests a test procedure waiver and interim waiver pursuant to 10 CFR 431.401 with regards to 10 CFR 431 Appendix C of subpart R Uniform Test Method for the Measurement of Net Capacity and AWEF of Walk-In Cooler and Walk-In Freezer Refrigeration Systems. This request is for newly proposed test procedures for Walk-In Single Packaged Dedicated Refrigeration Systems.

The reasons for the test procedure amendments are to account for the following;

1. Testing multiple compressors and refrigeration circuits incorporated into a single system.

2. Modifying the use of the 25′ line set as these are single packaged dedicated systems not intended to be used with a line set.

These systems meet the DOE definition of a Single-Packaged Dedicated System (single packaged assembly that includes one or more compressors, a condenser, a means for forced circulation of refrigerated air, and elements by which heat is transferred from air to refrigerant, without any element external to the system imposing resistance to flow of the refrigerated air.). Appendix C to Subpart R of Part 431 states that this equipment is to be evaluated using the test procedure set forth in AHRI 1250–2009 with certain modifications provided in the CFR. Neither 1250 nor the CFR address the prospect of multiple refrigeration circuits in one single-packaged system. Therefore, we request a waiver to cover the procedure for testing systems with multiple refrigeration circuits.

These systems incorporate multiple refrigeration circuits and operate on a single power feed. Each refrigeration circuit has its own compressor, expansion device, condenser, and evaporator circuits and may share condenser and evaporator fans and a single system controller. RSG is requesting a procedural waiver that allows for testing each refrigeration circuit under the same procedure as described in the CFR, but conduct the test simultaneously on each refrigeration circuit with duplicate monitoring of pressures, temperatures, and mass flow for each circuit. The power consumption of the total system will be collected. To determine the system AWEF, follow the procedures in the attached Alternate Procedure document. We feel this is keeping with the intent of the CFR while accounting for design characteristics of a multi-circuit system.

With respect to the CFR and the reference of a 25′ line set (C9.2) and section C3.3.3 referencing refrigerant charge, since one piece single-packaged systems are not intended to be remotely split via a line set, we request that the requirement for the 25′ line set (C8.3 or 9.2) for this type of product be replaced with simply adding a mass flow meter to the liquid line between the heat exchanger and the expansion device. The existing suction line would not be disturbed for the test. The mass flow meter would be added with minimal additional liquid line (5 foot total maximum insulated with line size matching that supplied with the system) consistent with C3.4. The added refrigerant charge to account for the added liquid line extensions to and from the mass flow meter,

the mass flow meter itself and the sight glass would be determined using the pre-existing procedure in C3.3.3. It is also requested to relax the specification in C3.3.3 of 0.5 °F tolerance for each on coil temp to 1 °F as these temperature tolerances can be difficult to repeatedly achieve when the units are shut down, re-plumbed and recharged and additionally, existing test condition tolerances of 1 °F already exist for the indoor air temps which will affect the on-coil temps.

The detailed alternate test procedures are in the attached Alternate Test Procedure document.

Additionally, we recognize that the DOE has previously issued waivers for single package refrigeration systems to use the alternate energy determination methods specified in AHRI 1250–2020 for single packaged systems, specifically air enthalpy methods (amongst others). Our lab is currently not set up to use this test method and the third-party agencies that we have contacted have replied that they are not able to conduct this test method at this time. We have conducted extensive testing using the method noted above and believe that it mirrors the intent of AHRI 1250–2009 and CFR modifications. Requiring alternate test methods from AHRI 1250–2020 will place an undue burden both financially and time wise on RSG. We suggest the above alternative as a viable test method that mirrors the current test method described in the CFR and yields representative real life energy use/efficiency for the systems. Also going forward, the DOE could have alternate test methods for single packaged refrigeration systems that lend themselves to the current test method and not mandate this type of system to test methods that would require added expenses for test labs not currently set up for alternate test methods specified in AHRI 1250–2020.

The basic models that this interm waiver and waiver would apply to are as follows, branded Norlake and Masterbilt;

CPB050PC–S–0, CPB075PC–S–0, CPB100PC–S–0, CPF050PC–S–0, CPF075PC–S–0, CPF100PC–S–0, CPF150PC–S–4 and CPF200PC–S–4.

Other manufactures of this class of equipment include but may not be limited to Heatcraft, Kolpak and Turbo-Air.

Conclusion

With the above noted information RSG requests that the DOE issue an Interim waiver and waiver to allow this modified energy efficiency test method as an alternate to the existing methods to account for single packaged walk-in refrigeration system construction. Failure to grant this request would have an economic hardship due to loss of revenue from sales of this product and/or significantly delay the release of the product to the market. Should the DOE require any additional information to move this forward we would be available and pleased to discuss.

Thank you for your consideration,

/s/

Bill Larson, CFSP

Senior Research and Development Engineer

Refrigerated Solutions Group

715–386–2323

RSG Alternate Test Procedure

The alternate test procedure for the RSG basic models shall be tested using the test procedure for walk-in cooler refrigeration systems prescribed by DOE at 10 CFR part 431, subpart R, appendix C, except as detailed below. All other requirements of 10 CFR part 431, subpart R, appendix C, and DOE's regulations remain applicable.

Modification to 10 CFR part 431, subpart R, appendix C:

* * * * *

3.1.1. In Table 1, Instrumentation Accuracy, refrigerant temperature measurements shall have a tolerance of ±0.5 F for unit cooler in/out. Temperature measurements used to determine water vapor content of the air shall be accurate to within ±0.4 F, ±1.0 F for all other temperature measurements.

* * * * *

3.1.4. In Tables 2 through 14, the Test Condition Outdoor Wet Bulb Temperature requirement and its associated tolerance apply only to units with evaporative cooling and single-packaged dedicated systems.

* * * * *

3.1.6. Tables 3, 4, 7, and 8 shall be modified to read as follows:

TABLE 3—FIXED CAPACITY MATCHED REFRIGERATOR SYSTEM, CONDENSING UNIT LOCATED INDOOR

Test description	Unit cooler air entering dry-bulb (°F)	Unit cooler air entering relative humidity (%)	Condenser air entering dry-bulb (°F)	Condenser air entering wet-bulb (°F)	Compressor capacity	Test objective
Off Cycle Fan Power	35	<50	.....	.....	Compressor Off	Measure fan input wattage during compressor off cycle.
Refrigeration Capacity	35	<50	90	[1] 75, [2] 65	Compressor On	Determine Net Refrigeration Capacity of Unit Cooler, input power, and EER at Rating Condition.

Note:
1. Required only for evaporative Dedicated Condensing Units.
2. Maximum allowable value for Single-Packaged Dedicated Systems that do not use evaporative Dedicated Condensing Units, where all or part of the equipment is located in the outdoor room.

TABLE 4—FIXED CAPACITY MATCHED REFRIGERATOR SYSTEM, CONDENSING UNIT LOCATED OUTDOOR

Test description	Unit cooler air entering dry-bulb (°F)	Unit cooler air entering relative humidity (%)	Condenser air entering dry-bulb (°F)	Condenser air entering wet-bulb (°F)	Compressor capacity	Test objective
Off Cycle Fan Power	35	<50	.....	.....	Compressor Off	Measure fan input wattage during compressor off cycle.
Refrigeration Capacity A	35	<50	95	[1] 75, [2] 68	Compressor On	Determine Net Refrigeration Capacity of Unit Cooler, input power, and EER at Rating Condition.
Refrigeration Capacity B	35	<50	59	[1] 54, [2] 46	Compressor On	Determine Net Refrigeration Capacity of Unit Cooler, and system input power at moderate condition.
Refrigeration Capacity C	35	<50	35	[1] 34, [2] 29	Compressor On	Determine Net Refrigeration Capacity of Unit Cooler, and system input power at cold condition.

Note:
1. Required only for evaporative Dedicated Condensing Units.
2. Maximum allowable value for Single-Packaged Dedicated Systems that do not use evaporative Dedicated Condensing Units, where all or part of the equipment is located in the outdoor room.

TABLE 7—FIXED CAPACITY MATCHED FREEZER SYSTEM, CONDENSING UNIT LOCATED INDOOR

Test description	Unit cooler air entering dry-bulb (°F)	Unit cooler air entering relative humidity (%)	Condenser air entering dry-bulb (°F)	Condenser air entering wet-bulb (°F)	Compressor capacity	Test objective
Off Cycle Fan Power	−10	<50			Compressor Off	Measure fan input wattage during compressor off cycle.
Refrigeration Capacity	−10	<50	90	[1] 75, [2] 68	Compressor On	Determine Net Refrigeration Capacity of Unit Cooler, input power, and EER at Rating Condition.
Defrost Frost Load	−10	Various	90	[1] 75, [2] 68	System Dependent	Test according to Appendix C Section C11.

Note:
1. Required only for evaporative Dedicated Condensing Units.
2. Maximum allowable value for Single-Packaged Dedicated Systems that do not use evaporative Dedicated Condensing Units, where all or part of the equipment is located in the outdoor room.

TABLE 8—FIXED CAPACITY MATCHED FREEZER SYSTEM, CONDENSING UNIT LOCATED OUTDOOR

Test description	Unit cooler air entering dry-bulb (°F)	Unit cooler air entering relative humidity (%)	Condenser air entering dry-bulb (°F)	Condenser air entering wet-bulb (°F)	Compressor capacity	Test objective
Off Cycle Fan Power	−10	<50			Compressor Off	Measure fan input wattage during compressor off cycle.
Refrigeration Capacity A	−10	<50	95	[1] 75, [2] 68	Compressor On	Determine Net Refrigeration Capacity of Unit Cooler, input power, and EER at Rating Condition.
Refrigeration Capacity B	−10	<50	59	[1] 54, [2] 46	Compressor On	Determine Net Refrigeration Capacity of Unit Cooler, input power, and EER at Rating Condition.
Refrigeration Capacity C	−10	<50	35	[1] 34, [2] 29	Compressor On	Determine Net Refrigeration Capacity of Unit Cooler, input power, and EER at Rating Condition.
Defrost Frost Load	−10	Various	95	[1] 75, [2] 68	System Dependent	Test according to appendix C Section C11.

Note:
1. Required only for evaporative Dedicated Condensing Units.
2. Maximum allowable value for Single-Packaged Dedicated Systems that do not use evaporative Dedicated Condensing Units, where all or part of the equipment is located in the outdoor room.

* * * * *

BILLING CODE 6450–01–P

~~3.2.5. In the test setup (appendix C, section C8.3), the liquid line and suction line shall be constructed of pipes of the manufacturer-specified size. The pipe lines shall be insulated with a minimum total thermal resistance equivalent to1/2-inch thick insulation having a flat-surface R-Value of 3.7 ft^2- °F-hr/Btu per inch or greater. Flow meters need not be insulated but must not be in contact with the floor. The lengths of the connected liquid line and suction line shall be 25 feet ± 3 inches, not including the requisite flow meters, each. Of this length, no more than 15 feet shall be in the conditioned space. Where there are multiple branches of piping, the maximum length of piping applies to each branch individually as opposed to the total length of the piping.~~

Additional modifications to appendix C of AHRI 1250-2009 not yet specified in 10 CFR part 431, subpart R, appendix C:

C1. *Purpose*. The purpose of this appendix is to provide a method of testing for Matched-pair, single-packaged dedicated systems, as well as Unit coolers and Dedicated Condensing Units tested alone.

C2. Scope. These methods of testing apply to walk-in cooler and freezer systems that have either matched or mix-matched factory-made, forced circulation, free-delivery unit coolers and factory-made electric motor driven, single and variable capacity positive displacement condensing units, or single-packaged dedicated systems.

* * * * *

C.3.1.2 Air wet-bulb and dry-bulb temperatures entering the ~~Unit Cooler~~ Single-packaged system at its evaporator return and condenser air inlet shall be measured based on the airflow area at the point of measurement. One measuring station is required for each 2.0 ft2 of the first 10.0 ft2 of airflow area and one additional measuring station is required for each 4.0 ft2 of airflow area above 10.0 ft2. A minimum of two stations shall be used and the number of measuring stations shall be rounded up to the next whole number.

* * * * *

C.3.1.5 If sampling tubes are used, each tube opening may be considered a temperature measuring station provided the openings are uniformly spaced along the tube, the airflow rates entering each port are relatively uniform (± 15%) and the arrangement of tubes complies with the location requirements of C3.1.2. Additionally, a one time temperature traverse shall be made over the measurement surface, prior to the tests to assess the temperature variation and ensure it complies with the allowable deviation specified in C3.1.4. (Refer to ANSI/ASHRAE Standard 41.1 for more information and diagrams). If sampling tubes are not used for non-evaporative condensing single-package, a single air wet-bulb or RH sensor may be used. When used, this sensor shall be located at the geometric centre of the largest condenser coil face and 6-12 inches from the condenser coil.

* * * * *

C3.1.6 Refrigerant temperatures entering and leaving the ~~Unit Cooler~~ evaporator section of the Single-packaged system shall be measured by a temperature measuring instrument placed in a thermometer well and inserted into the refrigerant stream. These wells shall be filled with non-solidifying, thermal conducting liquid or paste to ensure the temperature sensing instrument is exposed to a representative temperature. The entering temperature of the refrigerant shall be measured within six pipe diameters upstream of the ~~control~~ expansion device. If the refrigerant tube outer diameter is less than ½-inch, the refrigerant temperature may be measured using the average of two temperature measuring instruments with a minimum accuracy of ±0.5°F placed on opposite sides of the refrigerant tube surface. In this case, the refrigerant tube shall be insulated with 1-inch thick insulation from a point 6 inches upstream of the measurement location to a point 6 inches downstream of the measurement location. Also, the entering measurement location may be moved to a location 6 inches upstream of the expansion device.

* * * * *

C3.3.1 With the equipment operating at the desired test conditions, the temperature and pressure of the refrigerant leaving the unit cooler, entering the expansion device, and entering and leaving the compressor shall be measured. For cases where the calibrated box method or indoor air enthalpy method is also conducted, data used to calculate capacity according to the single-package refrigerant enthalpy method and the ~~calibrated box~~ additional method shall be collected over the same intervals.

C3.3.3 ~~On equipment sensitive to refrigerant charge~~For single-package systems tested using either the calibrated box method or the indoor air enthalpy method as the primary measurement and the single-package refrigerant enthalpy method as the secondary method, a preliminary test for Rating Condition A using the primary method is required prior to setting up the refrigerant enthalpy method measurements. ~~connecting any pressure gauges or beginning the first official test.~~ In preparation for this preliminary test, temperature sensors shall be attached to the equipment's evaporator and condenser coils. The sensors shall be located at points that are not affected by vapor superheat or liquid subcooling. Placement near the midpoint of the coil, at a return bend, is recommended. The preliminary test shall be conducted with the requirement that the temperatures of the on-coil sensors be included with the regularly recorded data. After the preliminary test is completed, the refrigerant shall be removed from the equipment, and the refrigerant enthalpy measurement setup shall be completed~~, needed pressure gauges shall be installed~~. The equipment shall be evacuated and recharged with refrigerant. The test shall then be repeated. Once steady-state operation is achieved, refrigerant shall be added or removed until, as compared to the average values from the preliminary test, the following conditions are achieved: (1) each on-coil temperature sensor indicates a reading that is within ~~±0.5~~1.0°F, (2) the temperatures of the refrigerant entering and leaving the compressor are within ±4°F, and (3)

the refrigerant temperature entering the expansion device is within ±1°F. Once these conditions have been achieved over an interval of at least ten minutes, refrigerant charging equipment shall be removed and the remaining ~~first of the official~~ tests shall be conducted ~~initiated~~.

Replace section C3.4.6 [regarding measurement of refrigerant oil concentration and adjustment] with: C3.4.6 When conducting the refrigerant enthalpy method for a single-package system, the length of the added liquid line conducting refrigerant out of the system, to the flow meter, and back into the system shall be no more than 5 feet. No such modification to the suction line shall be made.

* * * * *

C5.1 The ~~Gross Total~~ Refrigeration Capacity ~~of Unit Coolers~~ for single-packaged refrigeration systems shall be determined ~~by either one of the following methods~~ using either the Calibrated Box method or the Indoor Air Enthalpy method as a primary test method and the Single-Package Refrigerant Enthalpy method as the secondary test method.

~~C5.1.1 Method 1, DX Dual Instrumentation (Refrigerant Enthalpy Method). The Refrigeration Capacity shall be determined by measuring the enthalpy change and the mass flow rate of the refrigerant across the Unit Cooler using two independent measuring systems.~~

~~C5.1.2 Method 2, DX Calibrated Box. The Refrigeration Capacity shall be determined concurrently by measuring the enthalpy change and the mass flow rate of the refrigerant across the Unit Cooler and the heat input to the calibrated box.~~

C5.1.1 Single-Package Refrigerant Enthalpy method shall determine gross refrigeration capacity by measuring the enthalpy change and the mass flow rate of the refrigerant using a single set of measurements.

C5.1.2 Calibrated Box method shall determine net refrigeration capacity by measuring the heat input to the calibrated box, including thermal transfer through the calibrated box walls.

C5.1.3 Indoor Air Enthalpy method shall determine net refrigeration capacity of Single-package System and input power in accordance with ASHRAE 37–2009, Figure C4, and the following modifications.

C5.1.3.1 Net refrigeration capacity is determined by measuring airflow rate and the dry-bub temperature and water vapor content of the air that enters and leaves the coil. Air enthalpies shall be determined in accordance with ANSI ASHRAE 41.6. Entering air is to be sufficiently dry as to not produce frost on the Evaporator coil. Therefore, only sensible capacity measured by dry bulb change shall be used to calculate capacity.

C5.1.4 Testing Sequence. The primary test method shall be used to measure the capacity for Rating Condition A prior to set-up of the Single-Package Refrigerant Enthalpy Measurement. After set-up of the Refrigerant Enthalpy method, the Net Capacity shall be measured using both the primary test method and the Refrigerant Enthalpy method. The Net Capacity measurement using the Refrigerant Enthalpy method shall be within 6 percent of the net capacity measurement using the primary method.

If a capacity balance within tolerance is not initially achieved, take steps to reduce the thermal losses of the single-package system evaporator compartment by sealing air gaps and potentially adding more external insulation. If using the Calibrated Box method as the primary method, achieving a capacity balance may require conducting the calibration with calibrated box insulation material at the same average temperature as during capacity measurement, or using multiple calibrations conducted at different average insulation material temperatures and using these data to construct a correlation for the calibration coefficient K_{cb} as a function of average insulation temperature. The official performance measurements are based on the primary method testing without any air gap sealing and additional external insulation used to achieve the 6 percent energy balance in place.

C5.1.5 The refrigerant enthalpy method Net Capacity shall be calculated from the Gross Capacity Measurement as follows.

$$\dot{Q}_{ss,2} = \dot{Q}_{ref} - 3.412 \times \dot{E}F_{comp,on} - \dot{Q}_{sploss}$$

Where $\dot{Q}_{sploss}$ represents the single-package system thermal losses through the walls of the evaporator side of the single-package system to the condenser side and to the exterior ambient, and shall be calculated as follows.

$$\dot{Q}_{sploss} = UA_{cond} \times (T_{condside} - T_{evapside}) + UA_{amb} \times (T_{amb} - T_{evapside})$$

Where:

UA_{cond} and UA_{amb} are, for the condenser/evaporator partition and the evaporator compartment walls exposed to ambient air, respectively, the product of the overall heat transfer coefficient and surface area of the unit as manufactured, *i.e.* without external insulation that might have been added during the test;

$T_{evapside}$ is the air temperature in the evaporator compartment;

$T_{condside}$ is the air temperature in the condenser compartment; and

T_{amb} is the air temperature outside the single-package system.

The Net Capacity to be used in AWEF calculations shall be the net capacity measured using the primary method.

C5.2 Upon the completion of the Rating Condition A steady state test, an off-cycle evaporator fan power test shall be conducted to measure the evaporator fan power consumption during a compressor-off period in accordance with C10 of this standard.

C5.3 Upon the completion of the Rating Condition A steady state test for walk-in freezer systems, a mandatory defrost test shall be conducted to establish the energy input for a defrost cycle ~~and the time between defrost intervals~~. ~~An optional defrost test to establish credit for an adaptive or demand defrost system may be elected after the mandatory defrost test.</PHOTO>~~

C5.4 Upon the completion of the Rating Condition A steady state test, off-cycle evaporator fan power test, and defrost test (for walk-in freezer systems), the Rating Condition B and C steady state tests shall be conducted. Capacity balance as described in section C5.1.4 for Rating Condition A is not required for Rating Conditions B and C.

* * * * *

C6.3 For single-packaged dedicated systems, test chamber requirements shall be as follows:

a.) For the calibrated box method, follow ASHRAE 16 – 2016 section 6.1 for calibrated type calorimeters excluding water and water energy inputs for the indoor-side compartment
b.) For the indoor air enthalpy method, follow ASHRAE 37-2009.

* * * * *

Figure C3: Calibrated Box and Single-package Refrigerant Enthalpy Method

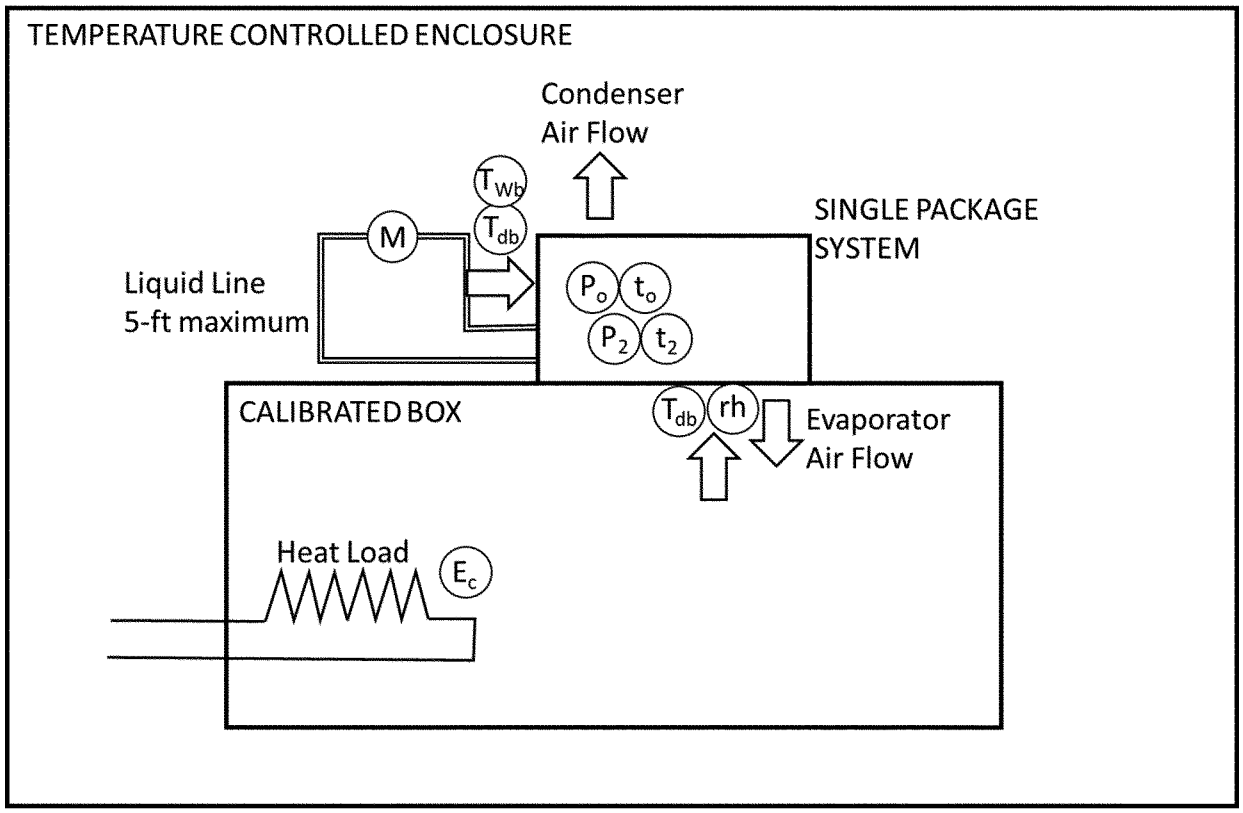

LEGEND	
M	Mass Flow Meter
T_{db} T_{Wb}	Air Temperature Measurement Station
rh	Air Relative Humidity Measurement
P	Refrigerant Pressure Measurement
t	Refrigerant Temperature Measurement Station
E_c	Heat Load Input Power

Figure C4: Indoor Air Enthalpy and Single-package Refrigerant Enthalpy Method

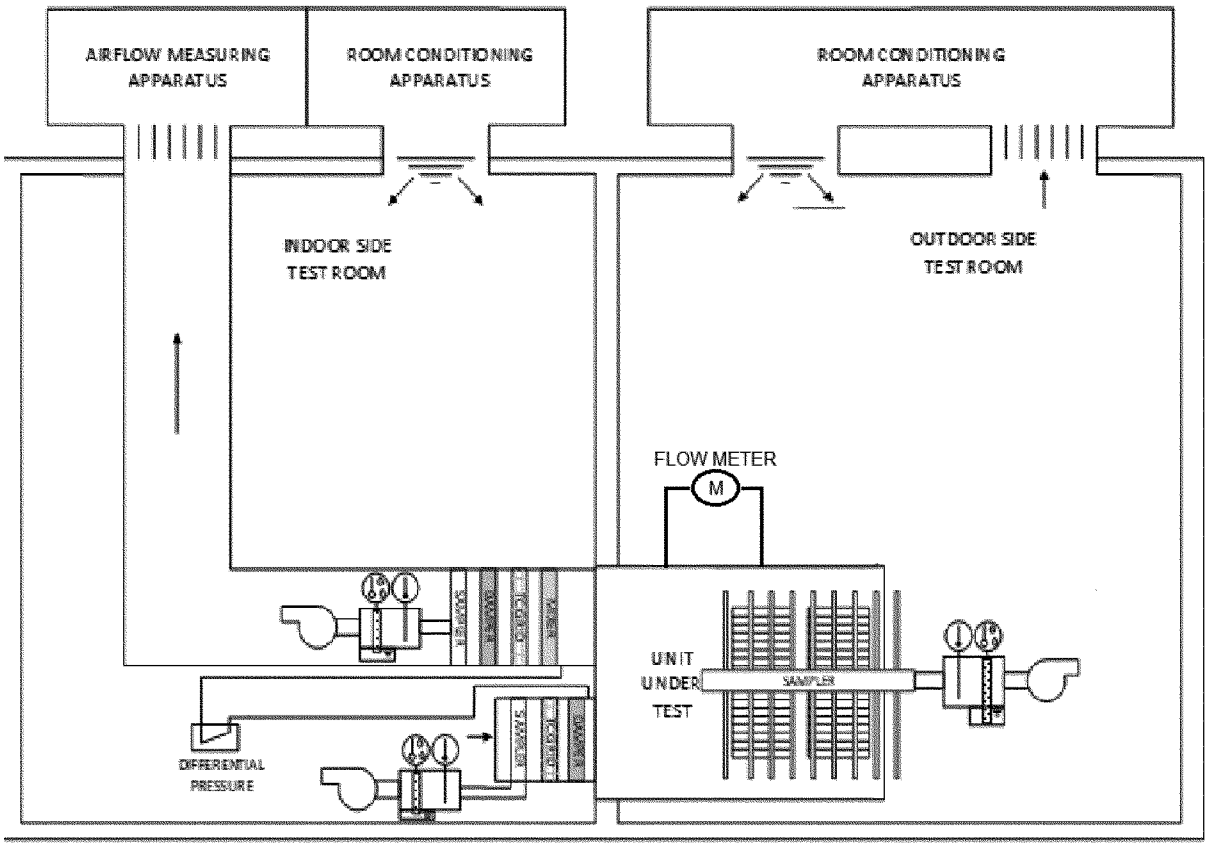

* * * * *

C8 Single-package Refrigerant Enthalpy Method ~~*DX Dual Instrumention Test Procedure (Method 1: Refrigerant Enthalpy Method)*~~

C8.1 General Description. In this method, capacity is determined from the refrigerant enthalpy change and flow rate. Enthalpy changes are determined from measurements of entering and leaving pressures and temperatures of the refrigerant, and the flow rate is determined by a suitable flow meter in the liquid line. ~~For cases where calibrated box method is also conducted, data used to calculate capacity as described in the refrigerant enthalpy method and the calibrated box method shall be collected over the same intervals. This method may be used for tests of equipment in which the refrigerant charge is not critical and where normal installation procedures involve the field connection of refrigerant lines.~~ This method shall not be used for tests in which the refrigerant liquid leaving the flow meter is subcooled less than 3°F or for tests in which any instantaneous measurement of the superheat of the vapor leaving the evaporator coil is less than 5°F. ~~If~~ Supplementary cooling may be artificially provided for the ~~in the~~ liquid line ~~is artificially introduced~~ to ensure enough subcooling when making measurements to establish the capacity balance for Rating Condition A, however, no official measurements used to calculate AWEF may be made while providing such supplementary cooling. ~~the added cooling capacity shall be measured and deducted from the gross refrigeration capacity calculated in C8.5.2.~~

C8.2 Measurements. Refer to Section C3 for requirements of air-side and refrigerant-side measurements

C8.3 Test Setup and Procedure. Refer to Section C6, C7 and Figure C3 for specific test setup. ~~The condensing unit and the unit cooler shall be connected by pipes with manufacturer' specified size The pipe lines shall be well insulated.~~ The length~~s~~ of the ~~connected~~ added liquid line ~~and suction line~~ shall be ~~2~~5 feet, ~~respectively~~ maximum.

C8.4 Data to be Measured and Recorded. Refer to "Refrigerant Enthalpy Method" in Table C2 in Section C7.2 for the required data that need to measured and recorded, except as follows.

C8.4.1 Water vapor content of air entering the unit cooler (evaporator) and condensing unit may be measured using a wet bulb temperature measurement or a relative humidity sensor, but both are not required.

C8.4.2 Wet bulb temperature of air leaving the unit cooler (evaporator) and condensing unit need not be measured.

C8.4.3 Required refrigerant pressure measurement includes only subcooled liquid entering the expansion valve and superheated vapor exiting the unit cooler (evaporator).

C8.4.4 Only one refrigerant mass flow measurement is required.

C8.4.5 Measurement of Refrigerant oil flow rate and oil/refrigerant mass ratio are not required.

C8.5 Refrigeration capacity Calculation.

C8.5.1 The refrigerant-side gross capaciti~~es~~y ~~by independent measurement are~~ is calculated by

$$\dot{Q}_{ref} = \dot{m}_{ref}(h_{out} - h_{in})$$

~~C8.5.2 Gross refrigeration capacity is calculated by~~

~~C8.5.3 Allowable Cooling Capacity heat balance~~

~~C8.5.4 The net refrigeration capacity is calculated by~~

C8.5.2 Measurement of Capacity for a Single-package System with Multiple Refrigeration Circuits.

For a Single-package System with multiple refrigeration circuits, apply the refrigerant enthalpy method separately for each circuit and sum the separately-measured gross refrigeration capacities.

C9 ~~DX~~ Calibrated Box Test Procedure ~~(Method 2)~~

C9.1 Measurements. Refer to Section C3 for requirements of air-side and refrigerant-side measurements.

C9.2 Test Setup and Procedure. Refer to Section C6, C7 and Figure ~~C2~~C3 for specific test setup. ~~The condensing unit and the unit cooler shall be connected by pipes with manufacturer' specified size he pipe lines shall be well insulated. The lengths of the connected liquid line and suction line shall be 26 feet, respectively.~~

C9.2.1 Apparatus Setup for Calibrated Box Calibration and Test

C9.2.1.1 The calibrated box shall be installed in a temperature controlled enclosure in which the temperature can be maintained at a constant level. When using the calibrated box method for single-package systems, the enclosure air temperature shall be maintained such that the condenser air entering conditions are as specified for the test.

C9.2.1.2 The temperature controlled enclosure shall be of a size that will provide clearances of not less than 18 in at all sides, top and bottom, except that clearance of any one surface may be reduced to not less than 5.5 in.

C9.2.1.3 ~~In no case shall~~ The heat leakage of the calibrated box shall be noted in the test report. ~~recorded and exceed 30 % of the Gross Total Cooling Effect of the Unit Cooler under~~

~~test. The ability to maintain a low temperature in the temperature controlled enclosure will reduce the heat leakage into the calibrated box and may extend its application range.~~

C9.2.1.4 Refrigerant lines within the calibrated box shall be well insulated to avoid appreciable heat loss or gain.

C9.2.1.5 Instruments for measuring the temperature around the outside of the calibrated box to represent the enclosure temperature T_{en} shall be located at the center of each wall, ceiling, and floor. ~~at a distance of 6 in from the calibrated box.~~ Exception: in the case where a clearance around the outside of the calibrated box, as indicated above, is reduced to less than 18 in, the number of temperature measuring devices on the outside of that surface shall be increased to six, which shall be treated as a single temperature to be averaged with the temperature of each of the other five surfaces. The six temperature measuring instruments shall be located at the center of six rectangular sections of equal area. If the refrigeration system is mounted at the location that would cover the center of the face on which it is mounted, up to four temperature measurements shall be used on that face to represent its temperature. Each sensor shall be aligned with the center of the face's nearest outer edge and centered on the distance between that edge and the single-packaged unit (this is illustrated in Figure C5 when using surface temperature sensors), and they shall be treated as a single temperature to be averaged with the temperature of each of the other five surfaces. However, any of these sensors shall be omitted if either (a) the distance between the outer edge and the single packaged unit is less than a foot or (b) if the sensor location would be within two feet of any of the foot-square surfaces discussed below representing a warm discharge air impingement area. In this case, the remaining sensors shall be used to represent the average temperature for the surface.

One of the following two approaches shall be used for the box external temperature measurement. Box calibration and system capacity measurement shall both be done using the same one of these approaches.

C9.2.1.5.1 Air temperature sensors.

Each temperature sensor shall be at a distance of 6 inches from the calibrated box. If the clearance from a surface of the box (allowed for one surface only) is less than 12 inches, the temperature measuring instruments shall be located midway between the outer wall of the calibrated box and the adjacent surface.

C9.2.1.5.2 Surface temperature sensors.

Surface temperature sensors shall be mounted on the calibrated box surfaces to represent the enclosure temperature T_{en}.

Additional surface temperature sensors may be used to measure external hot spots during refrigeration system testing. If this is done, two temperature sensors shall be used to measure the average temperature of the calibrated box surface covered by the condensing section—they shall be located centered on equal-area rectangles comprising the covered calibrated box surface whose common sides span the short dimension of this surface. Additional surface temperature sensors may be use to measure box surfaces on which warm condenser discharge air impinges. A pattern of square surfaces measuring one foot square shall be mapped out to represent the hot spot upon which the warm condenser air impinges. One temperature sensor shall be used to measure surface temperature at the center of each square (see Figure C5). A drawing showing this pattern and identifying the surface temperature sensors shall be provided in the test report. The average surface temperature of the overall calibrated box outer surface during testing shall be calculated as follows.

~~test. The ability to maintain a low temperature in the temperature controlled enclosure will reduce the heat leakage into the calibrated box and may extend its application range.~~

C9.2.1.4 Refrigerant lines within the calibrated box shall be well insulated to avoid appreciable heat loss or gain.

C9.2.1.5 Instruments for measuring the temperature around the outside of the calibrated box to represent the enclosure temperature T_{en} shall be located at the center of each wall, ceiling, and floor. ~~at a distance of 6 in from the calibrated box.~~ Exception: in the case where a clearance around the outside of the calibrated box, as indicated above, is reduced to less than 18 in, the number of temperature measuring devices on the outside of that surface shall be increased to six, which shall be treated as a single temperature to be averaged with the temperature of each of the other five surfaces. The six temperature measuring instruments shall be located at the center of six rectangular sections of equal area. If the refrigeration system is mounted at the location that would cover the center of the face on which it is mounted, up to four temperature measurements shall be used on that face to represent its temperature. Each sensor shall be aligned with the center of the face's nearest outer edge and centered on the distance between that edge and the single-packaged unit (this is illustrated in Figure C5 when using surface temperature sensors), and they shall be treated as a single temperature to be averaged with the temperature of each of the other five surfaces. However, any of these sensors shall be omitted if either (a) the distance between the outer edge and the single packaged unit is less than a foot or (b) if the sensor location would be within two feet of any of the foot-square surfaces discussed below representing a warm discharge air impingement area. In this case, the remaining sensors shall be used to represent the average temperature for the surface.

One of the following two approaches shall be used for the box external temperature measurement. Box calibration and system capacity measurement shall both be done using the same one of these approaches.

$$T_{en} = \frac{\sum_{i=1}^{6} A_i T_i + \sum_{j=1}^{2} A_j \left(T'_j - T_1\right) + \sum_{k=1}^{n} A_k \left(T''_k - T_1\right)}{\sum_{i=1}^{6} A_i}$$

Where:

A_i is the surface area of the ith of the six calibrated box surfaces;

T_i is the average temperature measured for the ith surface;

A_j is half of the surface area of the calibrated box covered by the condensing section;

T'_j is the jth of the two temperature measurements underneath the condensing section;

T_1 is the average temperature of the four or fewer measurements representing the temperature of the face on which the single-packaged system is mounted, prior to adjustments associated with hot spots based on measurements T_j and/or T_k;

A_k is the area of the kth of n 1-square-foot surfaces used to measure the condenser discharge impingement area hot spot;

T''_k is the kth of the n temperature measurements of the condenser discharge impingement area hot spot; and

Figure C5: Illustration of Layout of Surface Temperature Sensors on Face of Calibrated Box on which Single-packaged System is Mounted when using C9.2.1.5.2.

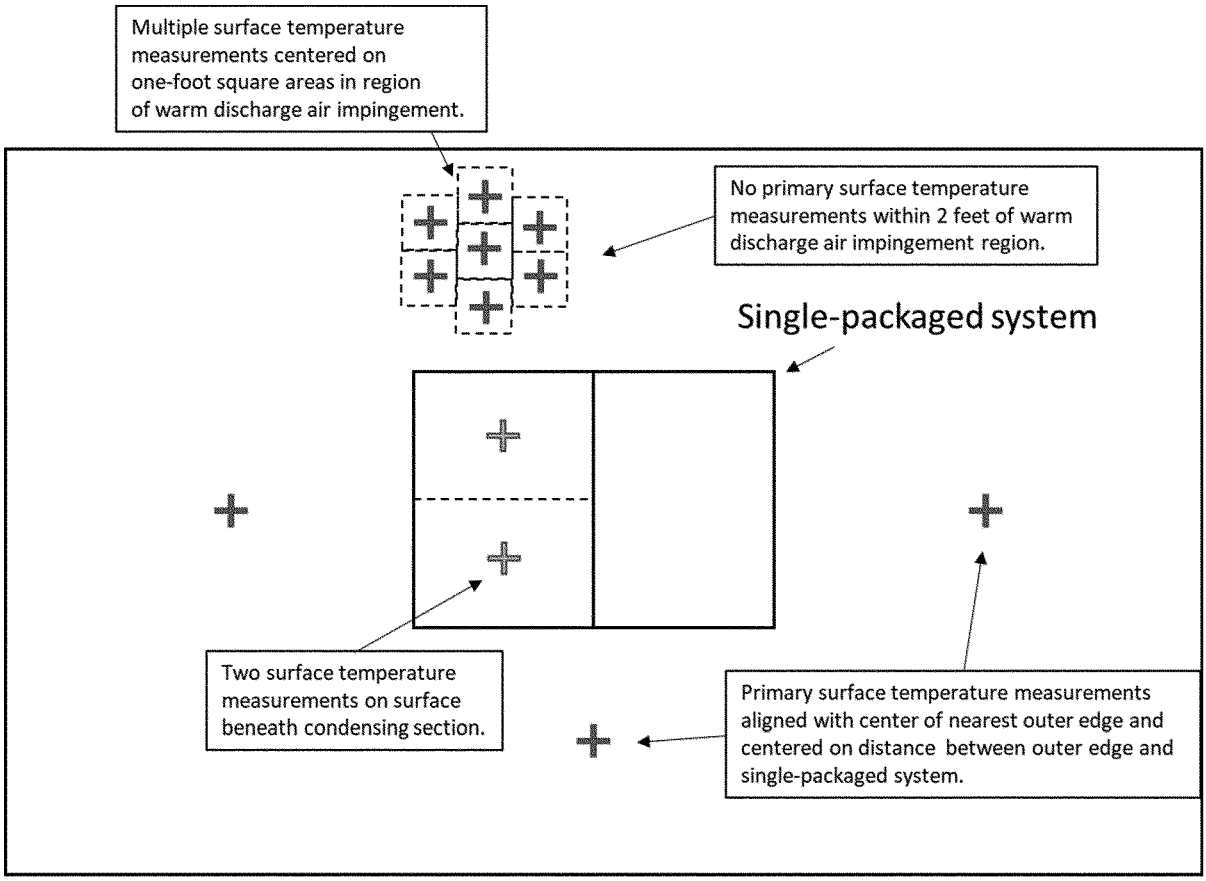

C9.2.1.6 Heating means inside the calibrated box shall be shielded or installed in a manner to avoid radiation to the ~~Unit Cooler~~Single-package system, the temperature measuring instruments, and to the walls of the box. The heating means shall be constructed to avoid stratification of temperature, and suitable means shall be provided for distributing the temperature uniformly.

C9.2.1.7 The average air dry-bulb temperature in the calibrated box during ~~Unit Cooler~~Single-package system tests and calibrated box heat leakage tests shall be the average of eight temperatures measured at the corners of the box at a distance of 2 in to 4 in from the walls. The instruments shall be shielded from any cold or warm surfaces except that they shall not be shielded from the adjacent walls of the box. The ~~Unit Cooler~~Single-package system under test shall be mounted such that the temperature instruments are not in the direct air stream from the discharge of the ~~Unit Cooler~~Single-package system.

C9.2.2 Calibration of the Calibrated Box. Calibration of the Calibrated Box shall occur prior to installation of the Single-package system. This shall be done either (a) prior to cutting the opening needed to install the Single-package system, or (b) with an insulating panel with the same thickness and thermal resistance as the box wall installed in the opening intended for the Single-package system installation. Care shall be taken to avoid thermal shorts in the location of the opening either during calibration or during subsequent installation of the Single-package System. A calibration test shall be made for ~~the maximum and the minimum forced~~ air movements comparable to those expected for Single-package system capacity measurement, i.e. with air volume flow rate within 10 percent of the air volume flow rate of the Single-package system evaporator. ~~expected in the use of the calibrated box~~. ~~The calibration heat leakage shall be plotted as a straight line function of these two air quantities and the curve shall be used as calibration for the box.~~

C9.2.2.1 The heat input shall be adjusted to maintain an average box temperature not less than 25.0 °F above the test enclosure temperature.

C9.2.2.2 The average dry-bulb temperature inside the calibrated box shall not vary more than 1.0 °F over the course of the calibration test.

C9.2.2.3 A calibration test shall be the average of eleven consecutive hourly readings when the box has reached a steady-state temperature condition.

C9.2.2.4 The box temperature shall be the average of all readings after a steady-state temperature condition has been reached.

C9.2.2.5 The calibrated box has reached a steady-state temperature condition when:

1. The average box temperature is not less than 25 °F above the test enclosure temper-ature.

2. Temperature variations do not exceed 5.0 °F between temperature measuring stations.

3. Temperatures do not vary by more than 2 °F at any one temperature- measuring station.

C9.3 Data to be Measured and Recorded. Refer to Table C2 in Section C7.2 for the required data that need to measured and recorded.

C9.4 Refrigeration capacity Calculation.

C9.4.1 The heat leakage coefficient of the calibrated box is calculated by

$$K_{cb} = \frac{3.412 \times \dot{E}_c}{T_{en} - T_{cb}}$$

C9.4.2 For each Dry Rating Condition, calculate the ~~air-side Gross~~ Net ~~Total~~ ~~Refrigeration~~ Capacity:

$$\dot{q}_{ss} = K_{cb}(T_{en} - T_{cb}) + 3.412 \times \dot{E}_c$$

$$\cancel{\dot{Q}_{air} = K_{cb} \cdot (T_{en} - T_{cb}) + 3.412 \cdot (\dot{E}_c + \dot{E}F_{comp,on})}$$

~~C9.4.3 For each Dry Rating Condition, calculate the refrigerant-side Gross Total Refrigeration Capacity:~~

~~C9.4.4 Gross Total Refrigeration Capacity:~~

~~C9.4.5 Allowable Refrigeration Capacity heat balance~~

[FR Doc. 2022–15726 Filed 7–21–22; 8:45 am]

BILLING CODE 6450–01–C

DEPARTMENT OF ENERGY

Environmental Management Site-Specific Advisory Board, Paducah

AGENCY: Office of Environmental Management, Department of Energy.

ACTION: Notice of open meeting.

SUMMARY: This notice announces a meeting of the Environmental Management Site-Specific Advisory Board (EM SSAB), Paducah. The Federal Advisory Committee Act requires that public notice of this meeting be announced in the **Federal Register**.

DATES: Thursday, August 18, 2022; 5:30 p.m.–7 p.m.

ADDRESSES: The meeting will be held, strictly following COVID–19 precautionary measures, at: West Kentucky Community and Technical College, Emerging Technology Building, Room 109, 5100 Alben Barkley Drive, Paducah, Kentucky 42001.

FOR FURTHER INFORMATION CONTACT: Eric Roberts, Board Support Manager, by Phone: (270) 554–3004 or Email: *eric@pgdpcab.org.*

SUPPLEMENTARY INFORMATION:

Purpose of the Board: The purpose of the Board is to make recommendations to DOE–EM and site management in the areas of environmental restoration, waste management, and related activities.

Tentative Agenda

- Review of Agenda
- Administrative Issues
- Public Comment Period

Public Participation: The meeting is open to the public. The EM SSAB, Paducah, welcomes the attendance of the public at its advisory committee meetings and will make every effort to accommodate persons with physical disabilities or special needs. If you require special accommodations due to a disability, please contact Eric Roberts as soon as possible in advance of the meeting at the telephone number listed above. Written statements may be filed with the Board either before or after the meeting. Comments received by no later than 5:00 p.m. CDT on Monday, August 15, 2022 will be read aloud during the meeting. Comments will also be accepted after the meeting, by no later than 5:00 p.m. CDT on Friday, August 26, 2022. Please submit comments to the Paducah Board Support Manager at the aforementioned email address. Please put ''Public Comment'' in the subject line. Individuals who wish to make oral statements pertaining to agenda items should contact Eric Roberts at the telephone number listed above. Requests must be received as soon as possible prior to the meeting and reasonable provision will be made to include the presentation in the agenda. The Deputy Designated Federal Officer is empowered to conduct the meeting in a fashion that will facilitate the orderly conduct of business. Individuals wishing to make oral public comments will be provided a maximum of five minutes to present their comments. Individuals wishing to submit written public comments should email them as directed above. The EM SSAB, Paducah, will hear oral public comments pertaining to its scope (clean-up standards and environmental restoration; waste management and disposition; stabilization and disposition of non-stockpile nuclear materials; excess facilities; future land use and long-term stewardship; risk assessment and management; and clean-up science and technology activities). Comments outside of the scope may be submitted via written statement as directed above.

Minutes: Minutes will be available by writing or calling Eric Roberts, Board Support Manager, Emerging Technology Center, Room 221, 4810 Alben Barkley Drive, Paducah, KY 42001; Phone: (270) 554–3004. Minutes will also be available at the following website: *https://www.energy.gov/pppo/pgdp-cab/listings/meeting-materials.*

Signed in Washington, DC, on July 19, 2022.

LaTanya Butler,

Deputy Committee Management Officer.

[FR Doc. 2022–15724 Filed 7–21–22; 8:45 am]

BILLING CODE 6450–01–P

DEPARTMENT OF ENERGY

Federal Energy Regulatory Commission

[Docket No. IC22–21–000]

Commission Information Collection Activity (FERC–555); Comment Request; Extension

AGENCY: Federal Energy Regulatory Commission.

ACTION: Notice of information collection and request for comments.

SUMMARY: In compliance with the requirements of the Paperwork Reduction Act of 1995, the Federal Energy Regulatory Commission (Commission or FERC) is soliciting public comment on the currently approved information collections, FERC–555 (Preservation of Records for Public Utilities and Licensees, Natural Gas Companies, and Oil Pipeline Companies).

DATES: Comments on the collections of information are due September 20, 2022.

ADDRESSES: You may submit your comments (identified by Docket No. IC22–21–000) on FERC–555 by one of the following methods:

Electronic filing through *https://www.ferc.gov* is preferred.

- *Electronic Filing:* Documents must be filed in acceptable native applications and print-to-PDF, but not in scanned or picture format.
- For those unable to file electronically, comments may be filed by USPS mail or by hand (Including Courier) Delivery:

○ *Mail via U.S. Postal Service Only:* Addressed to: Federal Energy Regulatory Commission, Secretary of the