AUTHENTICATED
U.S. GOVERNMENT
INFORMATION
GPO

FEDERAL REGISTER

Vol. 87 Thursday
No. 125 June 30, 2022

Pages 38875–39328

OFFICE OF THE FEDERAL REGISTER

The **FEDERAL REGISTER** (ISSN 0097–6326) is published daily, Monday through Friday, except official holidays, by the Office of the Federal Register, National Archives and Records Administration, under the Federal Register Act (44 U.S.C. Ch. 15) and the regulations of the Administrative Committee of the Federal Register (1 CFR Ch. I). The Superintendent of Documents, U.S. Government Publishing Office, is the exclusive distributor of the official edition. Periodicals postage is paid at Washington, DC.

The **FEDERAL REGISTER** provides a uniform system for making available to the public regulations and legal notices issued by Federal agencies. These include Presidential proclamations and Executive Orders, Federal agency documents having general applicability and legal effect, documents required to be published by act of Congress, and other Federal agency documents of public interest.

Documents are on file for public inspection in the Office of the Federal Register the day before they are published, unless the issuing agency requests earlier filing. For a list of documents currently on file for public inspection, see *www.federalregister.gov.*

The seal of the National Archives and Records Administration authenticates the Federal Register as the official serial publication established under the Federal Register Act. Under 44 U.S.C. 1507, the contents of the **Federal Register** shall be judicially noticed.

The **Federal Register** is published in paper and on 24x microfiche. It is also available online at no charge at *www.govinfo.gov*, a service of the U.S. Government Publishing Office.

The online edition of the **Federal Register** is issued under the authority of the Administrative Committee of the Federal Register as the official legal equivalent of the paper and microfiche editions (44 U.S.C. 4101 and 1 CFR 5.10). It is updated by 6:00 a.m. each day the **Federal Register** is published and includes both text and graphics from Volume 1, 1 (March 14, 1936) forward. For more information, contact the GPO Customer Contact Center, U.S. Government Publishing Office. Phone 202-512-1800 or 866-512-1800 (toll free). E-mail, *gpocusthelp.com.*

The annual subscription price for the **Federal Register** paper edition is $860 plus postage, or $929, for a combined **Federal Register, Federal Register** Index and List of CFR Sections Affected (LSA) subscription; the microfiche edition of the **Federal Register** including the **Federal Register** Index and LSA is $330, plus postage. Six month subscriptions are available for one-half the annual rate. The prevailing postal rates will be applied to orders according to the delivery method requested. The price of a single copy of the daily **Federal Register,** including postage, is based on the number of pages: $11 for an issue containing less than 200 pages; $22 for an issue containing 200 to 400 pages; and $33 for an issue containing more than 400 pages. Single issues of the microfiche edition may be purchased for $3 per copy, including postage. Remit check or money order, made payable to the Superintendent of Documents, or charge to your GPO Deposit Account, VISA, MasterCard, American Express, or Discover. Mail to: U.S. Government Publishing Office—New Orders, P.O. Box 979050, St. Louis, MO 63197-9000; or call toll free 1-866-512-1800, DC area 202-512-1800; or go to the U.S. Government Online Bookstore site, see *bookstore.gpo.gov.*

There are no restrictions on the republication of material appearing in the **Federal Register.**

How To Cite This Publication: Use the volume number and the page number. Example: 87 FR 12345.

Postmaster: Send address changes to the Superintendent of Documents, Federal Register, U.S. Government Publishing Office, Washington, DC 20402, along with the entire mailing label from the last issue received.

SUBSCRIPTIONS AND COPIES

PUBLIC

Subscriptions:

Paper or fiche	**202–512–1800**
Assistance with public subscriptions	**202–512–1806**

General online information **202–512–1530; 1–888–293–6498**

Single copies/back copies:

Paper or fiche	**202–512–1800**
Assistance with public single copies	**1–866–512–1800 (Toll-Free)**

FEDERAL AGENCIES

Subscriptions:

Assistance with Federal agency subscriptions:

Email	*FRSubscriptions@nara.gov*
Phone	**202–741–6000**

The Federal Register Printing Savings Act of 2017 (Pub. L. 115-120) placed restrictions on distribution of official printed copies of the daily **Federal Register** to members of Congress and Federal offices. Under this Act, the Director of the Government Publishing Office may not provide printed copies of the daily **Federal Register** unless a Member or other Federal office requests a specific issue or a subscription to the print edition. For more information on how to subscribe use the following website link: *https://www.gpo.gov/frsubs.*

Printed on recycled paper.

Contents

Federal Register

Vol. 87, No. 125

Thursday, June 30, 2022

Agricultural Marketing Service
PROPOSED RULES
Oranges, Grapefruit, Tangerines, and Pummelos Grown in Florida:
Marketing Order, 39003–39008

Agriculture Department
See Agricultural Marketing Service
See Federal Crop Insurance Corporation
See Natural Resources Conservation Service
See Rural Business-Cooperative Service
See Rural Housing Service
See Rural Utilities Service
See The U.S. Codex Office

Air Force Department
NOTICES
Agency Information Collection Activities; Proposals, Submissions, and Approvals, 39070

Army Department
NOTICES
Agency Information Collection Activities; Proposals, Submissions, and Approvals, 39071

Bureau of Consumer Financial Protection
NOTICES
Request for Membership Applications:
Advisory Committees, 39067–39068

Children and Families Administration
NOTICES
Agency Information Collection Activities; Proposals, Submissions, and Approvals:
Sexual Risk Avoidance Education Performance Analysis Study, 39098–39099

Coast Guard
RULES
Safety Zones:
Annual Events in the Captain of the Port Buffalo Zone—July–August 2022, 38995
Caruso Affiliated Holdings Fireworks Event, Newport Beach, CA, 38996–38998
Delaware River; DRWC Fireworks; Penn's Landing, 38986–38987
Fireworks Display, Delaware River, Philadelphia, PA, 38998–39000
Fireworks Display, Yaquina Bay, Newport, OR, 38993–38995
Fireworks Displays in the Fifth Coast Guard District, 38987
SamSen Operation Fireworks, Seneca Lake; Romulus, NY, 38989–38991
Savannah River 4th of July Fireworks Show, Savannah, GA, 38991–38993
Waterway, Tonawanda, NY, 38987–38989

Commerce Department
See Foreign-Trade Zones Board
See Industry and Security Bureau
See International Trade Administration
See National Oceanic and Atmospheric Administration
See National Telecommunications and Information Administration

Comptroller of the Currency
NOTICES
Agency Information Collection Activities; Proposals, Submissions, and Approvals:
Annual Stress Test Rule, 39159–39160

Consumer Product Safety Commission
NOTICES
Voluntary Standard for Infant Bouncers Seats, 39068–39069

Copyright Royalty Board
RULES
Proxy Distributions for Unmatched Royalties Deposited during 2010–2018, 39000–39001

Corporation for National and Community Service
NOTICES
Agency Information Collection Activities; Proposals, Submissions, and Approvals:
Request for Medical or Religious Reasonable Accommodation, 39069–39070

Defense Department
See Air Force Department
See Army Department
See Navy Department
NOTICES
Agency Information Collection Activities; Proposals, Submissions, and Approvals, 39071–39073
Committee Renewal:
Education for Seapower Advisory Board, 39072

Drug Enforcement Administration
NOTICES
Importer, Manufacturer or Bulk Manufacturer of Controlled Substances; Application, Registration, etc.:
Adiramedica, LLC, 39126–39127
American Radiolabeled Chem, 39127
Aurobindo Pharma USA, Inc., 39127–39128
Cambrex Charles City, 39126

Education Department
NOTICES
Agency Information Collection Activities; Proposals, Submissions, and Approvals:
Federal Family Education Loan/Direct Loan/Perkins Military Service Deferment/Post-Active Duty Student Deferment Request, 39079–39080
Talent Search Annual Performance Report, 39080
Applications for New Awards:
Modeling and Simulation Program, 39074–39079

Election Assistance Commission
NOTICES
Agency Information Collection Activities; Proposals, Submissions, and Approvals:
Budget Expense Worksheet, 39080–39081

Energy Department
See Federal Energy Regulatory Commission
PROPOSED RULES
Energy Conservation Program:
Standards for Walk-in Coolers and Freezers, 39008–39015
Test Procedure for Commercial Refrigerators, Refrigerator-Freezers, and Freezers, 39164–39231
NOTICES
Request for Information:
Innovative Technologies Loan Guarantee Program, 39081–39082

Environmental Protection Agency
PROPOSED RULES
Air Quality State Implementation Plans; Approvals and Promulgations:
Utah; Revisions to Utah Administrative Code: Environmental Quality; Title R307; Air Quality, 39036–39039
NOTICES
Program Requirement Revisions:
Public Water System Supervision Program for the State of Connecticut, 39092–39093
Proposed Determination to Prohibit and Restrict the Use of Certain Waters within Defined Areas as Disposal Sites; Pebble Deposit Area, Southwest Alaska; Extension of Comment Period, 39091–39092
Risk Evaluations for Chemical Substances, 39085–39091

Federal Aviation Administration
RULES
Airspace Designations and Reporting Points:
Bethel, AK, 38915–38916
Liberal, KS, 38916–38919
Menominee, MI, 38910–38911
Northcentral United States, 38919–38920
Vicinity of Malden, MO, 38912–38913
White Cloud, MI, 38913–38914
PROPOSED RULES
Airspace Designations and Reporting Points:
Grand Canyon National Park Airport, AZ, 39022–39023
Valle Airport, AZ, 39023–39025
Airworthiness Directives:
Airbus Helicopters, 39019–39022
Bell Textron Canada Limited Helicopters, 39015–39019

Federal Communications Commission
NOTICES
Agency Information Collection Activities; Proposals, Submissions, and Approvals, 39093–39095

Federal Council on the Arts and the Humanities
NOTICES
Meetings:
Arts and Artifacts Indemnity Panel Advisory Committee, 39132

Federal Crop Insurance Corporation
RULES
Crop Insurance Reporting and Other Changes, 38883–38900

Federal Energy Regulatory Commission
NOTICES
Combined Filings, 39083–39084
Environmental Impact Statements; Availability, etc.:
Golden Pass Pipeline, LLC; MP66–69 Compression Relocation and Modification Amendment and MP33 Compressor Station Modification Amendment Project, 39082–39083
Environmental Review Schedule:
Calcasieu Pass Uprate Amendment Project, Venture Global Calcasieu Pass, LLC, 39084–39085
Initial Market-Based Rate Filings Including Requests for Blanket Section 204 Authorizations:
ORNI 50, LLC, 39085

Federal Transit Administration
NOTICES
Early Scoping for Metropolitan Atlanta Rapid Transit Authority's Proposed Clifton Corridor Transit Initiative:
Fulton County and DeKalb County, GA, 39157–39159

Fish and Wildlife Service
NOTICES
Agency Information Collection Activities; Proposals, Submissions, and Approvals:
Federal Fish and Wildlife Permit Applications and Reports—Management Authority, 39112–39115

Food and Drug Administration
PROPOSED RULES
General and Plastic Surgery Devices:
Reclassification of Optical Diagnostic Devices for Melanoma Detection and Electrical Impedance Spectrometers, 39025–39033
NOTICES
Determination of Regulatory Review Period for Purposes of Patent Extension:
Tepezza, 39099–39100
Drug Products not Withdrawn from Sale for Reasons of Safety or Effectiveness:
Micronor (Norethindrone Tablets, 0.35 Milligram), 39100–39101
Guidance:
Patient-Focused Drug Development: Selecting, Developing, or Modifying Fit-for-Purpose Clinical Outcome Assessments, 39101–39103

Foreign-Trade Zones Board
NOTICES
Expansion under Alternative Site Framework:
Foreign-Trade Zone 79, Tampa, FL, 39063

General Services Administration
NOTICES
Agency Information Collection Activities; Proposals, Submissions, and Approvals:
Collection of the Government-wide Pulse Survey, 39096–39098
Mission-Support Customer Satisfaction Survey, 39095–39096

Health and Human Services Department
See Children and Families Administration
See Food and Drug Administration
See Health Resources and Services Administration
See National Institutes of Health
RULES
Grants Regulation:
Removal of Non-Discrimination Provisions and Repromulgation of Administrative Provisions under the Uniform Grant Regulation, 39001

Health Resources and Services Administration
NOTICES
National Vaccine Injury Compensation Program:
List of Petitions Received, 39103–39104

Homeland Security Department
See Coast Guard
See U.S. Customs and Border Protection

Housing and Urban Development Department
NOTICES
Agency Information Collection Activities; Proposals, Submissions, and Approvals:
Public Housing Flat Rent Exception Request Market Analysis, 39109–39110
Public Housing Grants Support for Payment Voucher, 39110–39111
Remote Video Inspection, 39111
Request for Information:
Implementation of the Build America, Buy America Act, 39111–39112

Indian Affairs Bureau
NOTICES
Indian Gaming:
Extension of Tribal-State Class III Gaming Compacts in California, 39115

Industry and Security Bureau
RULES
Addition of Entities, Revision and Correction of Entries, and Removal of Entities from the Entity List, 38920–38934

Interior Department
See Fish and Wildlife Service
See Indian Affairs Bureau
See Land Management Bureau
See National Park Service
See Reclamation Bureau

International Trade Administration
NOTICES
Antidumping or Countervailing Duty Investigations, Orders, or Reviews:
Truck and Bus Tires from the People's Republic of China, 39063–39065

Justice Department
See Drug Enforcement Administration
NOTICES
Agency Information Collection Activities; Proposals, Submissions, and Approvals:
Annual Reporting Requirement for Manufacturers of Listed Chemicals, 39128–39129
Proposed Consent Decree Amendment under the Clean Water Act, 39128

Labor Department
See Occupational Safety and Health Administration
NOTICES
Agency Information Collection Activities; Proposals, Submissions, and Approvals:
Notice of Special Enrollment Rights under Group Health Plans, 39130
Prohibited Transaction Class Exemption for Insurance and Annuity Contracts and Mutual Fund Principal Underwriters, 39129–39130

Land Management Bureau
NOTICES
Environmental Impact Statements; Availability, etc.:
Nevada Gold Mines, LLC Goldrush Mine Project, Lander and Eureka Counties, NV, 39115–39116
Meetings:
Proposed Withdrawal; Arizona, 39116–39118
Public Land Order:
Public Land Order No. 7909; Extension of Public Land Order No. 7873; Withdrawal for Land Management Evaluation Purposes, and Correction of Legal Land Description; Nevada, 39122–39123
Temporary Closure and Temporary Restrictions of Specific Uses on Public Lands:
2022 Burning Man Event (Permitted Event), Pershing County, NV, 39118–39122
Temporary Seasonal Closure of Public Lands:
La Plata and Montezuma Counties, CO, 39123–39124

Library of Congress
See Copyright Royalty Board

National Credit Union Administration
NOTICES
Agency Information Collection Activities; Proposals, Submissions, and Approvals, 39130–39132

National Foundation on the Arts and the Humanities
See Federal Council on the Arts and the Humanities
NOTICES
Agency Information Collection Activities; Proposals, Submissions, and Approvals:
Qualitative Feedback on Agency Service Delivery; Generic Clearance, 39132–39133

National Highway Traffic Safety Administration
RULES
Federal Motor Vehicle Safety Standards:
Child Restraint Systems; Side Impact Protection, 39234–39317

National Institutes of Health
NOTICES
Meetings:
Center for Scientific Review, 39105
National Institute of Mental Health, 39105
Office of Research Infrastructure Programs Special Emphasis Panel, 39104–39105

National Oceanic and Atmospheric Administration
RULES
Civil Procedures in Civil Administrative Enforcement Proceedings, 38934–38943
Fisheries of the Northeastern United States:
Amendment 8 to the Northeast Skate Complex Fishery Management Plan, 39002
NOTICES
Meetings:
Pacific Fishery Management Council, 39066
Permits; Applications, Issuances, etc.:
Marine Mammals; File No. 21476, 39066–39067
Marine Mammals; File No. 26447, 39065–39066

National Park Service
NOTICES
National Register of Historic Places:
Pending Nominations and Related Actions, 39124–39125

National Science Foundation
NOTICES
Antarctic Conservation Act Permits, 39133

National Telecommunications and Information Administration
NOTICES
Meetings:
Commerce Spectrum Management Advisory Committee; Correction, 39067

Natural Resources Conservation Service
NOTICES
Meetings:
Urban Agriculture and Innovative Production Advisory Committee, 39052–39053

Navy Department
NOTICES
Agency Information Collection Activities; Proposals, Submissions, and Approvals, 39073–39074

Occupational Safety and Health Administration
RULES
Safety and Health Regulations for Construction—Lead, 38985–38986
PROPOSED RULES
Massachusetts State Plan for State and Local Government Employers:
Proposal to Grant Initial State Plan Approval, 39033–39036

Postal Regulatory Commission
NOTICES
New Postal Products, 39133–39134

Presidential Documents
PROCLAMATIONS
Russian Federation; Increased Duties on Certain Imported Articles (Proc. 10420), 38875–38881
ADMINISTRATIVE ORDERS
Foreign Assistance Act of 1961; Delegation of Authority Under Section 506(a)(1) (Memorandum of June 23, 2022), 39319–39321
Foreign Relations:
Partnership for Global Infrastructure and Investment (Memorandum of June 26, 2022), 39323–39328

Reclamation Bureau
NOTICES
Agency Information Collection Activities; Proposals, Submissions, and Approvals:
Technical Service Center Summer Intern Program Application, 39125–39126

Rural Business-Cooperative Service
NOTICES
Funds Availability:
Rural Placemaking Innovation Challenge for Fiscal Year 2022, 39053–39063

Rural Housing Service
NOTICES
Funds Availability:
Rural Placemaking Innovation Challenge for Fiscal Year 2022, 39053–39063

Rural Utilities Service
NOTICES
Funds Availability:
Rural Placemaking Innovation Challenge for Fiscal Year 2022, 39053–39063

Securities and Exchange Commission
RULES
Electronic Submission of Applications for Orders under the Advisers Act and the Investment Company Act, Confidential Treatment Requests for Filings, 38943–38981
NOTICES
Application:
Investment Company Act Release No. 34636, 39136–39137
Self-Regulatory Organizations; Proposed Rule Changes:
Cboe Exchange, Inc., 39142–39153
NYSE American, LLC, 39139–39141
NYSE Arca, Inc., 39134–39136, 39141–39142
NYSE Chicago, Inc., 39137–39139

Small Business Administration
RULES
Regulatory Reform Initiative:
Streamlining and Modernizing the 7(a), Microloan, and 504 Loan Programs to Reduce Unnecessary Regulatory Burden, 38900–38910

Social Security Administration
NOTICES
Agency Information Collection Activities; Proposals, Submissions, and Approvals, 39153–39157
Maximum Dollar Limit in the Fee Agreement Process, 39157

State Department
RULES
Implementation of Helping American Victims Affected by Neurological Attacks Act, 38981–38985

The U.S. Codex Office
NOTICES
International Standard-Setting Activities, 39044–39052

Transportation Department
See Federal Aviation Administration
See Federal Transit Administration
See National Highway Traffic Safety Administration
PROPOSED RULES
Department of Transportation Drug and Alcohol Testing Data, 39039–39043

Treasury Department
See Comptroller of the Currency

U.S. Customs and Border Protection
NOTICES
Agency Information Collection Activities; Proposals, Submissions, and Approvals:
Accreditation of Commercial Testing Laboratories and Approval of Commercial Gaugers, 39107–39108
Exportation of Used Self-Propelled Vehicles, 39107
User Fees, 39105–39107
Country of Origin Marking Requirements for Containers or Holders, 39108–39109

Veterans Affairs Department
NOTICES
Agency Information Collection Activities; Proposals, Submissions, and Approvals:
Application for Burial Benefits, 39160–39161
Yellow Ribbon Program Agreement and Principles of Excellence for Educational Institutions, 39161–39162

Separate Parts In This Issue

Part II
Energy Department, 39164–39231

Part III
Transportation Department, National Highway Traffic Safety Administration, 39234–39317

Part IV
Presidential Documents, 39319–39321, 39323–39328

Reader Aids

Consult the Reader Aids section at the end of this issue for phone numbers, online resources, finding aids, and notice of recently enacted public laws.

To subscribe to the Federal Register Table of Contents electronic mailing list, go to https://public.govdelivery.com/accounts/USGPOOFR/subscriber/new, enter your e-mail address, then follow the instructions to join, leave, or manage your subscription.

CFR PARTS AFFECTED IN THIS ISSUE

A cumulative list of the parts affected this month can be found in the Reader Aids section at the end of this issue.

3 CFR

Proclamations:

10420 38875

Administrative Orders:

Memorandums:

Memorandum of June 23, 2022 39321

Memorandum of June 26, 2022 39323

7 CFR

407 38883

457 38883

Proposed Rules:

905 39003

10 CFR

Proposed Rules:

429 39164

431 (2 documents) 39008, 39164

13 CFR

120 38900

123 38900

14 CFR

71 (6 documents) 38910, 38912, 38913, 38915, 38916, 38919

Proposed Rules:

39 (2 documents) 39015, 39019

71 (2 documents) 39022, 39023

15 CFR

744 38920

904 38934

17 CFR

232 38943

240 38943

249 38943

270 38943

275 38943

279 38943

21 CFR

Proposed Rules:

878 39025

22 CFR

135 38981

29 CFR

1926 38985

Proposed Rules:

1952 39033

33 CFR

165 (9 documents) 38986, 38987, 38989, 38991, 38993, 38995, 38996, 38998

37 CFR

370 39000

40 CFR

Proposed Rules:

52 39036

45 CFR

75 39001

49 CFR

571 39234

Proposed Rules:

40 39039

50 CFR

648 39002

Federal Register
Vol. 87, No. 125
Thursday, June 30, 2022

Presidential Documents

Title 3—

The President

Proclamation 10420 of June 27, 2022

Increasing Duties on Certain Articles From the Russian Federation

By the President of the United States of America

A Proclamation

1. On April 8, 2022, I signed the Suspending Normal Trade Relations with Russia and Belarus Act (19 U.S.C. 2434 note) (Suspending NTR Act). Section 3(a) of the Suspending NTR Act suspended nondiscriminatory tariff treatment for products of the Russian Federation and of the Republic of Belarus, and imposed the rates of duty set forth in column 2 of the Harmonized Tariff Schedule of the United States (HTSUS) on all products of the Russian Federation and of the Republic of Belarus, effective as of April 9, 2022. Section 3(b)(1) of the Suspending NTR Act provides that the President may proclaim increases in the column 2 rates of duty applicable to products of the Russian Federation and of the Republic of Belarus.

2. On April 8, 2022, I signed the Ending Importation of Russian Oil Act (22 U.S.C. 8923 note). Section 2 of the Ending Importation of Russian Oil Act prohibits imports of all products of the Russian Federation classified under chapter 27 of the HTSUS, in a manner consistent with any implementation actions issued under Executive Order 14066 of March 8, 2022.

3. In Executive Order 14066 of March 8, 2022, I prohibited, inter alia, importation into the United States of the following products of Russian Federation origin: crude oil; petroleum; petroleum fuels, oils, and products of their distillation; liquefied natural gas; coal; and coal products.

4. In Executive Order 14068 of March 11, 2022, I prohibited, inter alia, the importation into the United States of the following products of Russian Federation origin: fish, seafood, and preparations thereof; alcoholic beverages; and non-industrial diamonds.

5. In accordance with section 3(b)(1) of the Suspending NTR Act, I have determined that increasing the column 2 rates of duty to 35 percent ad valorem on certain other products of the Russian Federation, the importation of which has not already been prohibited, is warranted and consistent with the foreign policy interests of the United States. These products are listed in Annex A to this proclamation. The United States will monitor the implementation of the increased duties, and I may revisit this determination, as appropriate.

6. Section 604 of the Trade Act of 1974, as amended (19 U.S.C. 2483), authorizes the President to embody in the HTSUS the substance of statutes affecting import treatment, and actions thereunder, including the removal, modification, continuance, or imposition of any rate of duty or other import restriction.

NOW, THEREFORE, I, JOSEPH R. BIDEN JR., President of the United States of America, by the authority vested in me by the Constitution and the laws of the United States of America, including section 3 of the Suspending Normal Trade Relations with Russia and Belarus Act; section 301 of title 3, United States Code; and section 604 of the Trade Act of 1974, as amended, do hereby proclaim as follows:

(1) To increase the column 2 rates of duty on imports of certain articles of the Russian Federation as set forth in paragraph 5 of this proclamation,

HTSUS heading 9903.90.08 and new U.S. Note 30 to subchapter III of chapter 99 of the HTSUS are provided for in Annex A to this proclamation.

(2) The modifications to the HTSUS made by clause 1 of this proclamation shall be effective with respect to goods entered for consumption, or withdrawn from warehouse for consumption, on or after 12:01 a.m. eastern daylight time on the day that is 30 days after the date of this proclamation and shall continue in effect, unless such actions are expressly reduced, modified, or terminated.

(3) General Note 3(b) to the HTSUS is amended to add the Republic of Belarus and the Russian Federation to the list of countries subject to column 2 duties. This amendment is provided in Annex B to this proclamation.

(4) Any provision of previous proclamations and Executive Orders that is inconsistent with the actions taken in this proclamation is superseded to the extent of such inconsistency.

IN WITNESS WHEREOF, I have hereunto set my hand this twenty-seventh day of June, in the year of our Lord two thousand twenty-two, and of the Independence of the United States of America the two hundred and forty-sixth.

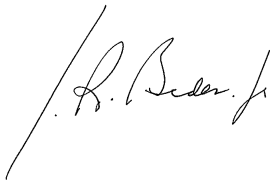

Billing code 3395–F2–P

Annexes for Column 2 Duties on Russia, and Addition of Russia and Belarus to list of Column 2 countries

ANNEX A

Effective with respect to goods entered for consumption, or withdrawn from warehouse for consumption, on or after 12:01 a.m. eastern daylight time on the day that is 30 days after the date of this Proclamation, subchapter III of chapter 99 of the Harmonized Tariff Schedule of the United States (HTSUS) is modified:

1. by inserting the following new heading 9903.90.08 in numerical sequence, with the material in the new heading inserted in the columns of the HTSUS labeled "Heading/Subheading", "Article Description", "Rates of Duty 1-General", "Rates of Duty-1 Special", "Rates of Duty 2", respectively:

Heading/ Subheading	Article Description	Rates of Duty		
		1		2
		General	Special	
"9903.90.08	Articles the product of the Russian Federation, as provided for in U.S. note 30(a) to this subchapter and as provided for in the subheadings enumerated in U.S. note 30(b) to this subchapter			35%".

2. by inserting the following new U.S. note 30 to subchapter III of chapter 99 in numerical sequence:

"30. (a) For the purposes of heading 9903.90.08, articles that are the product of the Russian Federation, as provided for in this note, shall be subject to a 35 percent *ad valorem* rate of duty in lieu of the rates of duty provided for such articles in column 2 of the HTSUS in chapters 1 to 97. All articles that are the product of the Russian Federation that are classified in the subheadings enumerated in U.S. note 30(b) to subchapter III of chapter 99 are subject to the 35 percent *ad valorem* rate of duty imposed by heading 9903.90.08.

As provided in U.S. note 1 to subchapter III of chapter 99, articles that are the product of the Russian Federation that are classified in the subheadings enumerated in U.S. note 30(b) to subchapter III of chapter 99 are subject to a 35 percent *ad valorem* rate of duty under heading 9903.90.08 in lieu of the rates of duty provided therefor in column 2 of the HTSUS in chapters 1 to 97.

The duties imposed by heading 9903.90.08 do not apply to goods for which entry is claimed under a provision of chapter 98 of the HTSUS, except for goods entered under subheadings 9802.00.40, 9802.00.50, and 9802.00.60, and heading 9802.00.80. For subheadings 9802.00.40, 9802.00.50, and 9802.00.60, the duties imposed by heading 9903.90.08 apply to the value of repairs, alterations, or processing performed abroad, as described in the applicable subheading.

For heading 9802.00.80, the duties imposed by heading 9903.90.08 apply to the value of the article less the cost or value of such products of the United States, as described in heading 9802.00.80.

Products of the Russian Federation that are provided for in heading 9903.90.08 and classified in one of the subheadings enumerated in U.S. note 30(b) to subchapter III of chapter 99 shall continue to be subject to antidumping, countervailing, or other duties, fees, exactions and charges that apply to such products, as well as to the 35 percent *ad valorem* rate of duty imposed by heading 9903.90.08.

(b) Heading 9903.90.08 applies to all products of the Russian Federation that are classified in the following 8-digit subheadings:

2501.00.00	2827.59.25	2903.12.00	2916.14.20
2512.00.00	2827.59.51	2903.41.10	2916.19.30
2514.00.00	2827.60.10	2903.42.10	2918.13.50
2519.90.50	2827.60.51	2903.43.10	2919.90.50
2530.90.80	2833.29.51	2903.44.10	2921.11.00
2703.00.00	2834.29.20	2903.45.10	2921.19.61
2807.00.00	2834.29.51	2903.46.10	2923.20.20
2811.21.00	2835.22.00	2903.47.10	2925.29.90
2811.29.10	2835.31.00	2903.48.00	2926.90.50
2812.19.00	2836.20.00	2903.49.00	2929.90.50
2812.90.00	2836.60.00	2903.51.10	2930.10.01
2815.11.00	2836.99.50	2903.59.10	2930.90.30
2817.00.00	2837.19.01	2903.59.90	2930.90.92
2818.10.10	2840.20.00	2903.69.90	2931.10.00
2818.10.20	2841.90.50	2903.78.00	2931.44.00
2825.60.00	2842.90.90	2903.79.90	2931.48.00
2825.70.00	2843.90.00	2903.89.70	2931.49.00
2825.90.15	2849.20.20	2905.19.90	2931.51.00
2825.90.90	2849.90.10	2905.41.00	2931.52.00
2826.19.90	2849.90.20	2905.42.00	2931.53.00
2827.20.00	2850.00.50	2914.19.00	2931.54.00
2827.31.00	2853.90.50	2914.79.90	2931.59.00
2827.32.00	2853.90.90	2915.29.50	2931.90.90
2827.35.00	2901.10.10	2915.39.90	2932.19.51
2827.39.25	2901.22.00	2915.40.50	2932.99.90
2827.39.45	2901.29.10	2915.50.10	2933.79.85
2827.39.55	2901.29.50	2915.70.01	2942.00.50
2827.39.60	2902.19.00	2915.90.18	3201.10.00
2827.39.65	2902.20.00	2915.90.50	3209.10.00
2827.39.90	2902.30.00	2916.11.00	3214.90.10
2827.49.50	2902.70.00	2916.12.50	3215.90.50

3401.11.50	3920.62.00	4016.93.10	4418.92.00
3401.20.00	3920.91.00	4016.93.50	4418.99.91
3401.30.50	3920.92.00	4016.95.00	4419.20.90
3402.49.90	3921.13.50	4202.29.20	4419.90.91
3402.50.51	3924.90.10	4203.29.50	4420.11.00
3402.90.50	3926.20.90	4302.19.30	4420.19.00
3403.99.00	3926.90.30	4401.31.00	4420.90.45
3404.90.51	3926.90.40	4401.32.00	4420.90.65
3405.90.00	3926.90.45	4401.39.42	4420.90.80
3406.00.00	3926.90.60	4404.20.00	4421.20.10
3506.91.50	3926.90.96	4407.11.00	4421.20.20
3506.99.00	4001.22.00	4407.12.00	4421.91.94
3507.90.70	4002.19.00	4407.13.00	4421.91.98
3603.30.00	4002.20.00	4407.19.00	4421.99.10
3603.40.00	4002.31.00	4407.23.01	4421.99.60
3603.50.00	4002.39.00	4407.29.02	4421.99.70
3603.60.00	4002.59.00	4407.91.00	4421.99.93
3701.30.00	4003.00.00	4407.96.00	4421.99.94
3701.91.00	4005.91.00	4408.10.01	4421.99.98
3702.31.01	4005.99.00	4408.90.01	4802.20.20
3703.90.30	4008.11.10	4409.10.10	4804.19.00
3801.20.00	4009.12.00	4409.10.20	4804.21.00
3804.00.50	4009.22.00	4409.10.40	4805.11.00
3811.29.00	4009.31.00	4409.10.90	4805.19.10
3815.19.00	4009.32.00	4409.22.10	4805.19.20
3818.00.00	4009.42.00	4409.22.40	4805.25.00
3824.40.50	4010.11.00	4409.29.26	4805.92.40
3824.99.11	4010.31.30	4409.29.61	4806.10.00
3902.10.00	4010.31.60	4409.29.91	4811.59.40
3902.20.10	4011.10.10	4411.14.10	4814.90.02
3904.61.00	4011.10.50	4411.14.60	4820.10.20
3904.69.10	4011.20.10	4411.92.10	4821.10.20
3904.69.50	4011.30.00	4414.10.00	4823.70.00
3906.90.50	4011.40.00	4414.90.00	4901.10.00
3907.21.00	4011.70.00	4415.10.90	4901.91.00
3907.29.00	4011.80.20	4418.21.80	4901.99.00
3910.00.00	4011.90.10	4418.29.80	4902.10.00
3917.29.00	4012.11.80	4418.40.00	4902.90.10
3917.32.00	4012.20.60	4418.74.10	4902.90.20
3917.33.00	4012.20.80	4418.81.00	4903.00.00
3917.39.00	4012.90.10	4418.82.00	4904.00.00
3920.10.00	4013.90.10	4418.83.00	4906.00.00
3920.20.00	4015.90.00	4418.89.00	4907.00.00

4908.90.00	6903.90.00	7311.00.00	8460.39.00
4909.00.20	6912.00.10	7314.41.00	8460.90.80
4910.00.20	6913.10.10	7318.15.20	8462.11.00
4911.10.00	7010.90.50	7318.15.40	8462.19.00
4911.91.10	7102.21.10	7318.16.00	8462.22.00
4911.91.40	7103.10.20	7318.22.00	8462.23.00
5205.13.20	7103.91.00	7325.10.00	8462.24.00
5903.10.20	7103.99.10	7408.11.60	8462.25.00
5910.00.90	7104.91.10	7408.19.00	8462.26.00
6216.00.13	7104.99.10	7409.21.00	8462.29.00
6216.00.38	7105.10.00	7410.22.00	8462.61.80
6301.30.00	7105.90.00	7506.20.30	8462.62.50
6302.10.00	7106.91.10	7604.29.30	8462.63.80
6302.21.90	7106.92.10	7604.29.50	8462.69.80
6302.31.90	7108.13.55	7605.11.00	8462.90.80
6302.51.10	7115.90.05	7606.12.30	8463.10.00
6403.19.70	7118.10.00	7606.12.60	8466.93.15
6403.59.90	7118.90.00	7613.00.00	8467.11.10
6403.91.60	7202.11.50	7801.10.00	8467.99.01
6403.91.90	7202.21.10	7801.99.90	8483.10.50
6403.99.90	7202.29.00	8205.59.30	8483.40.10
6405.10.00	7202.30.00	8207.20.00	8483.40.50
6406.90.60	7202.41.00	8208.90.60	8483.40.90
6506.10.60	7202.49.10	8302.30.30	8483.90.50
6703.00.30	7202.70.00	8305.20.00	8512.20.20
6802.21.50	7204.21.00	8406.90.75	8523.49.20
6802.91.05	7204.29.00	8408.20.10	8539.10.00
6803.00.10	7204.49.00	8408.90.10	8539.31.00
6803.00.50	7205.29.00	8412.21.00	8539.32.00
6804.10.00	7207.12.00	8412.29.80	8541.41.00
6804.21.00	7216.91.00	8412.31.00	8544.30.00
6804.22.60	7224.90.00	8412.39.00	8546.90.00
6804.23.00	7304.29.10	8412.90.90	8607.19.12
6804.30.00	7304.29.20	8421.11.00	8609.00.00
6805.30.10	7304.29.31	8442.50.10	8701.10.01
6805.30.50	7304.29.41	8443.91.10	8701.94.50
6806.10.00	7304.29.50	8443.91.30	8701.95.10
6806.20.00	7306.29.20	8455.30.00	8703.10.50
6807.10.00	7306.29.60	8455.90.80	8703.21.01
6810.99.00	7307.99.10	8456.11.10	8703.23.01
6811.82.00	7308.90.60	8458.11.00	8703.24.01
6815.99.41	7310.10.00	8459.39.00	8704.31.01
6903.20.00	7310.29.00	8459.61.00	8704.51.00

8706.00.15	8711.40.60	8903.33.00	9505.10.25
8707.10.00	8711.90.01	8903.93.90	9505.90.60
8708.10.60	8714.10.00	8903.99.91	9506.11.20
8708.29.15	8714.92.10	9002.20.40	9506.99.25
8708.29.25	8714.99.80	9006.91.00	9603.10.90
8708.29.51	8716.80.10	9007.91.40	9701.21.00
8708.30.50	8802.20.01	9008.90.80	9701.22.00
8708.40.11	8806.10.00	9014.20.80	9701.29.00
8708.40.30	8806.21.00	9014.80.50	9701.91.00
8708.40.50	8806.22.00	9023.00.00	9701.92.00
8708.40.65	8806.23.00	9304.00.40	9701.99.00
8708.40.70	8806.24.00	9305.20.80	9702.10.00
8708.40.75	8806.29.00	9306.21.00	9702.90.00
8708.50.99	8806.91.00	9306.30.41	9703.10.00
8708.70.60	8806.92.00	9401.20.00	9703.90.00
8708.80.16	8806.93.00	9401.91.15	9704.00.00
8708.80.65	8806.94.00	9401.99.10	9705.10.00
8708.91.75	8806.99.00	9403.50.60	9705.21.00
8708.92.10	8807.10.00	9403.70.80	9705.22.00
8708.92.50	8807.20.00	9403.91.00	9705.29.00
8708.92.75	8807.30.00	9403.99.10	9705.31.00
8708.94.75	8807.90.90	9403.99.40	9705.39.00
8708.99.41	8903.11.00	9404.40.10	9706.10.00
8708.99.48	8903.12.00	9404.90.81	9706.90.00.”
8708.99.68	8903.19.00	9406.10.00	
8708.99.81	8903.31.00	9504.40.00	
8711.30.00	8903.32.00	9505.10.15	

ANNEX B

Effective on the day that is 30 days after the date of this Proclamation, general note 3(b) to the HTSUS is modified by inserting “Republic of Belarus” and “Russian Federation” in alphabetical sequence.

[FR Doc. 2022–14145
Filed 6–29–22; 8:45 am]
Billing code 7020–02–C

Rules and Regulations

Federal Register
Vol. 87, No. 125
Thursday, June 30, 2022

This section of the FEDERAL REGISTER contains regulatory documents having general applicability and legal effect, most of which are keyed to and codified in the Code of Federal Regulations, which is published under 50 titles pursuant to 44 U.S.C. 1510.

The Code of Federal Regulations is sold by the Superintendent of Documents.

DEPARTMENT OF AGRICULTURE

Federal Crop Insurance Corporation

7 CFR Parts 407 and 457

[Docket ID FCIC–22–0004]

RIN 0563–AC79

Crop Insurance Reporting and Other Changes (CIROC)

AGENCY: Federal Crop Insurance Corporation, U.S. Department of Agriculture (USDA).

ACTION: Final rule with request for comments.

SUMMARY: The Federal Crop Insurance Corporation (FCIC) is amending its regulations to enhance production reporting terminology and assist producers with production reporting requirements. The amendments will provide alternative production reporting options to producers who are unable to provide disinterested third-party verifiable records to support their production report because the producer or a related person generates the supporting records (acceptable production records). FCIC is also clarifying the good farming practice appeal deadline (appeals and arbitration) and clarifying and correcting portions of the policy (clarifications and corrections). The changes to the crop insurance policies resulting from the amendments in this rule are applicable for the 2023 and succeeding crop years for crops with a contract change date on or after June 30, 2022. For all other crops, the changes to the policies made in this rule are applicable for the 2024 and succeeding crop years.

DATES:

Effective date: This final rule is effective June 30, 2022.

Comment date: We will consider comments that we receive by the close of business August 29, 2022. FCIC may consider the comments received and may conduct additional rulemaking based on the comments.

ADDRESSES: We invite you to submit comments on this rule. You may submit comments by going through the Federal eRulemaking Portal as follows:

- *Federal eRulemaking Portal:* Go to *http://www.regulations.gov* and search for Docket ID FCIC–22–0004. Follow the instructions for submitting comments.

All comments will be posted without change and will be publicly available on *www.regulations.gov.*

FOR FURTHER INFORMATION CONTACT: Francie Tolle; telephone (816) 926–7829; or email *francie.tolle@usda.gov.* Persons with disabilities who require alternative means for communication should contact the USDA Target Center at (202) 720–2600 (voice) or (844) 433–2774 (toll-free nationwide).

SUPPLEMENTARY INFORMATION:

Background

FCIC serves America's agricultural producers through effective, market-based risk management tools to strengthen the economic stability of agricultural producers and rural communities. FCIC is committed to increasing the availability and effectiveness of Federal crop insurance as a risk management tool. Approved Insurance Providers (AIPs) sell and service Federal crop insurance policies in every state through a public-private partnership. FCIC reinsures the AIPs who share the risks associated with catastrophic losses due to major weather events. FCIC's vision is to secure the future of agriculture by providing world class risk management tools to rural America.

Federal crop insurance policies typically consist of the Basic Provisions, the Crop Provisions, the Special Provisions, the Commodity Exchange Price Provisions, if applicable, other applicable endorsements or options, the actuarial documents for the insured agricultural commodity, the Catastrophic Risk Protection Endorsement, if applicable, and the applicable regulations published in 7 CFR chapter IV. Throughout this rule, the terms ''Crop Provisions,'' ''Special Provisions,'' and ''policy'' are used as defined in the Common Crop Insurance Policy (CCIP) Basic Provisions in 7 CFR 457.8. Additional information and definitions related to Federal crop insurance policies are in 7 CFR 457.8.

Through this rule, FCIC amends the Area Risk Protection Insurance (ARPI) Basic Provisions (7 CFR part 407), CCIP Basic Provisions (7 CFR 457.8), in addition to specific crop insurance policies that are in the regulations. Throughout this rule, as the changes are explained and the specific crop insurance policies are mentioned for the specific changes, they are listed in alphabetical order by crop insurance policy name, which is also the section title in the regulations. Typically, in a rule, the sections of the regulations would be addressed in numerical order; however, due to the extensive range of crop insurance policies that this rule includes, for readers to find the information of relevance, the alphabetical order will be helpful. The range of crop insurance policies and the order in which they are listed is as follows:

- Arizona-California Citrus Fruit Crop Insurance Provisions (7 CFR 457.121);
- Blueberry Crop Insurance Provisions (7 CFR 457.166);
- Cabbage Crop Insurance Provisions (7 CFR 457.171);
- California Avocado Crop Insurance Provisions (7 CFR 457.175);
- Cranberry Crop Insurance Provisions (7 CFR 457.132);
- Florida Avocado Crop Insurance Provisions (7 CFR 457.173);
- Forage Production Crop Insurance Provisions (7 CFR 457.117);
- Fresh Market Pepper Crop Insurance Provisions (7 CFR 457.148);
- Fresh Market Sweet Corn Crop Insurance Provisions (7 CFR 457.129);
- Fresh Market Tomato Dollar Plan Crop Insurance Provisions (7 CFR 457.139);
- Guaranteed Production Plan of Fresh Market Tomato (7 CFR 457.128);
- Macadamia Nut Crop Insurance Provisions (7 CFR 457.131);
- Onion Crop Insurance Provisions (7 CFR 457.135);
- Peach Crop Insurance Provisions (7 CFR 457.153);
- Pear Crop Insurance Provisions (7 CFR 457.111);
- Pecan Revenue Crop Insurance Provisions (7 CFR 457.167);
- Prune Crop Insurance Provisions (7 CFR 457.133);
- Stonefruit Crop Insurance Provisions (7 CFR 457.159);
- Table Grape Crop Insurance Provisions (7 CFR 457.149); and

• Texas Citrus Crop Insurance Provisions (7 CFR 457.119).

The changes to the crop insurance policies resulting from the amendments in this rule are applicable for the 2023 and succeeding crop years for crops with a contract change date on or after June 30, 2022. For all other crops, the changes to the crop insurance policies resulting from the amendments in this rule are applicable for the 2024 and succeeding crop years.

Acceptable Production Records

FCIC is increasing flexibility for acceptable production records to make it easier for producers whose production records are not available from a disinterested third party to provide the supporting records needed to obtain insurance, report their annual production, and file a claim. FCIC is amending the Area Risk Protection Regulations (7 CFR 407.9), Common Crop Insurance Regulations (7 CFR 457.8), and 20 Crop Provisions to implement these changes.

Prior to this rule, FCIC generally required records from disinterested third parties (for example, sales record to an unrelated entity), or AIPs conducted preharvest appraisals as a supporting production record. However, some producers do not have disinterested third-party records which includes producers who sell their production directly to consumers (direct marketing) and producers who do not have disinterested third-party records because they, or a person related to them, generate the supporting records (for example, vertically integrated). In response to these issues, FCIC is amending production reporting terminology to simplify recordkeeping requirements and procedures for those producers who do not have disinterested third-party records available to them. These changes will also make the terminology and procedures consistent across policies.

The producer will self-identify that they will not have disinterested third-party records available, which will encourage a discussion with the AIP as to what records the producer does have that will meet production reporting requirements. The producer may be permitted to use their own records, or, in limited situations, request a pre-harvest appraisal. Generally, producers are required to use their actual production records. However, if their records are not at an acceptable level of detail needed for production reporting (for example, traceable back to the unit), RMA procedures outline criteria that would allow the producer to request an appraisal to supplement the producers' records. For example, producers who direct market their crop may request a pre-harvest appraisal, to use in conjunction with their acceptable production records, to allocate production to the applicable APH database or when the AIP determines the producer's final disposition records do not contain all information required for production reporting by APH database.

In certain situations, appraisals may be used, in lieu of harvested production, to adjust a claim, as outlined in the CCIP Basic Provisions, paragraph 15(b)(3). If the producer's harvested production is less than the appraised production, and they harvest the crop after the end of the insurance period, their appraised production will be used unless they can prove that no additional causes of loss or deterioration of the crop occurred after the end of the insurance period.

However, if they harvest the crop before the end of the insurance period, their harvested production will be used (1) unless the applicable Crop Provisions require an appraisal prior to harvest and they are unable to prove that additional insured causes of loss occurred after the appraisal or deterioration of the crop can be attributed to an insurable cause of loss after the appraisal was completed; then the producer's appraised production will be used; or (2) if the producer intends to direct market their crop or their production records will not be from a disinterested third party and the AIP determines an appraisal prior to harvest was necessary and they are unable to prove that additional insured causes of loss occurred after the appraisal or deterioration of the crop can be attributed to an insurable cause of loss after the appraisal was completed; then their appraised production will be used.

The changes in this rule are intended to assist producers with production reporting requirements when producers do not have disinterested third-party records available and to reduce the need for AIPs to conduct pre-harvest appraisals, which were previously used in lieu of disinterested third-party records. Several terms that were defined in various Crop Provisions, procedures, or administrative regulations, will now be defined in the ARPI Basic Provisions and CCIP Basic Provisions.

The changes to the Crop Provisions are as follows:

FCIC is removing the definition of ''direct marketing'' from individual Crop Provisions. As a result of this change, there will be only one definition of ''direct marketing'' in the Basic Provisions. This will reduce redundancy and eliminate potential conflicts between the CCIP Basic Provisions and the individual Crop Provisions. This change occurs in the following Crop Provisions:

• Arizona-California Citrus Fruit Crop Insurance Provisions (7 CFR 457.121);
• Blueberry Crop Insurance Provisions (7 CFR 457.166);
• Cabbage Crop Insurance Provisions (7 CFR 457.171);
• California Avocado Crop Insurance Provisions (7 CFR 457.175);
• Florida Avocado Crop Insurance Provisions (7 CFR 457.173);
• Forage Production Crop Insurance Provisions (7 CFR 457.117);
• Fresh Market Pepper Crop Insurance Provisions (7 CFR 457.148);
• Fresh Market Sweet Corn Crop Insurance Provisions (7 CFR 457.129);
• Guaranteed Production Plan of Fresh Market Tomato Crop Insurance Provisions (7 CFR 457.128);
• Macadamia Nut Crop Insurance Provisions (7 CFR 457.131);
• Onion Crop Insurance Provisions (7 CFR 457.135);
• Peach Crop Insurance Provisions (7 CFR 457.153);
• Pear Crop Insurance Provisions (7 CFR 457.111);
• Prune Crop Insurance Provisions (7 CFR 457.133);
• Stonefruit Crop Insurance Provisions (7 CFR 457.159);
• Table Grape Crop Insurance Provisions (7 CFR 457.149); and
• Texas Citrus Crop Insurance Provisions (7 CFR 457.119).

Two Crop Provisions will retain the definition of ''direct marketing'' with the clarifying statement ''In addition to the definition contained in section 1 of the Basic Provisions,'' added. This change clarifies that the definition in the Crop Provisions does not override the definition in the Basic Provisions, but rather is intended to be used together. The change appears in:

• Fresh Market Tomato Dollar Plan Crop Insurance Provisions (7 CFR 457.139); and
• Pecan Revenue Crop Insurance Provisions (7 CFR 457.167).

FCIC is correcting the producer's notification requirement for any production intended for direct marketing to apply 15 days prior to harvest, rather than 15 days prior to the sale. Currently, the deadline for notification attaches to the date of sale, which may not allow an AIP an opportunity to conduct an in-field (pre-harvest) appraisal. This change will require the producer to notify the AIP at least 15 calendar days before the crop is harvested, which allows for the AIPs to

conduct pre-harvest appraisals. This change is being made in the following Crop Provisions:

- Arizona-California Citrus Fruit Crop Insurance Provisions (7 CFR 457.121);
- Blueberry Crop Insurance Provisions (7 CFR 457.166);
- California Avocado Crop Insurance Provisions (7 CFR 457.175);
- Florida Avocado Crop Insurance Provisions (7 CFR 457.173);
- Forage Production Crop Insurance Provisions (7 CFR 457.117);
- Fresh Market Sweet Corn Crop Insurance Provisions (7 CFR 457.129);
- Macadamia Nut Crop Insurance Provisions (7 CFR 457.131);
- Onion Crop Insurance Provisions (7 CFR 457.135);
- Peach Crop Insurance Provisions (7 CFR 457.153);
- Pear Crop Insurance Provisions (7 CFR 457.111);
- Pecan Revenue Crop Insurance Provisions (7 CFR 457.167);
- Prune Crop Insurance Provisions (7 CFR 457.133);
- Stonefruit Crop Insurance Provisions (7 CFR 457.159);
- Table Frape Crop Insurance Provisions (7 CFR 457.149); and
- Texas Citrus Crop Insurance Provisions (7 CFR 457.119).

Appeals and Arbitration

FCIC is adding the good farming practice appeal deadline to paragraph 23(b) of the ARPI Basic Provisions (7 CFR part 407) and paragraph 20(d) of the CCIP Basic Provisions (457.8). This change will ensure that producers are aware of the deadline to file an appeal of a good farming practice determination from the AIP. Currently, the deadline (30 days) is only contained in the administrative regulation, Subpart J, and procedural handbooks that are not provided to the producer because they are not part of the contract between the insured producer and the AIP. This is not a procedural change, but a change to provide a clear deadline within the policy. FCIC has had producers request an appeal to a good farming practice determination outside the timeframe for which they can request an appeal. The change reduces confusion with other types of appeal rights within the policy.

Clarifications and Corrections

FCIC is deleting obsolete language in paragraphs (c) through (f) from the preamble of the CCIP Basic Provisions (§ 457.8). In a rule published on March 30, 2010 at 75 FR 15777, FCIC added paragraphs (c) through (f) to the CCIP Basic Provisions (§ 457.8) to explain how the producer's active policy transitioned to the new plans of insurance when FCIC transitioned from Crop Revenue Coverage, Revenue Assurance, Income Protection, and Indexed Income Protection to Revenue Protection and Yield Protection plans of insurance. That language is no longer needed because all policies have transitioned to the new plans of insurance.

FCIC is adding language in the policy to be more consistent with procedure language. The policy now provides clarity regarding the impact of different production methods on a producer's Actual Production History (APH) yield, in section 3(h)(3) of the CCIP Basic Provisions (§ 457.8). The previous policy language was in a single large paragraph that generated confusion on which adjustment methods were applicable. The change breaks up the paragraph into more user-friendly paragraphs for clarity. If the approved APH yield needs to be adjusted because a producer changes the production method used on the acreage being insured, the adjustment needs to be the lower of: (1) the approved APH yield for the APH database; (2) the average of approved APH yields from other APH databases where the production method was carried out; or (3) the applicable county transitional-yield if the production method has not been carried out on other APH databases.

FCIC is replacing the phrase ''growing season'' with ''leaf year.'' This changes the wording to be consistent with how the information is shown in the actuarial documents. This change is being made in the following Crop Provisions:

- Arizona-California Citrus Crop Insurance Provisions (7 CFR 457.121);
- California Avocado Crop Insurance Provisions (7 CFR 457.175);
- Cranberry Crop Insurance Provisions (7 CFR 457.132);
- Florida Avocado Crop Insurance Provisions (7 CFR 457.173);
- Macadamia Nut Crop Insurance Provisions (7 CFR 457.131);
- Peach Crop Insurance Provisions (7 CFR 457.153);
- Prune Crop Insurance Provisions (7 CFR 457.133);
- Stonefruit Crop Insurance Provisions (7 CFR 457.159); and
- Table Grape Crop Insurance Provisions (7 CFR 457.149).

FCIC is clarifying that the minimum age or minimum production requirement is not waived by a written agreement, but rather if ''otherwise allowed by the Special Provisions.'' This change clarifies the producer's requirement and provides transparency in identifying the location of their requirements. This change is being made in the following Crop Provisions:

- Arizona-California Citrus Crop Insurance Provisions (7 CFR 457.121);
- Cranberry Crop Insurance Provisions (7 CFR 457.132);
- Macadamia Nut Crop Insurance Provisions (7 CFR 457.131);
- Peach Crop Insurance Provisions (7 CFR 457.153);
- Pear Crop Insurance Provisions (7 CFR 457.111);
- Stonefruit Crop Insurance Provisions (7 CFR 457.159); and
- Table Grape Crop Insurance Provisions (7 CFR 457.149).

FCIC is clarifying insurability requirements in the Pecan Revenue Crop Insurance Provisions (7 CFR 457.167). The minimum production requirement (600 pounds of pecans in-shell per acre in one of the previous 4 crop years) in paragraph 8(d) is unchanged. The minimum production requirement can only be waived by written agreement. There are published procedures on how written agreements can be requested, reviewed, and approved. The clarification ensures the Crop Provisions is consistent with these procedures, specifically that an AIP cannot unilaterally approve the written agreement. The minimum continuous acreage requirement (at least one contiguous acre) in paragraph 8(f) remains, but exceptions to the requirement are now explicitly listed in the Special Provisions, rather than requiring a request, review, and approval of a written agreement.

FCIC is clarifying that the definition for ''interplanted'' overrides the definition in the CCIP Basic Provisions, by adding the statement, ''In lieu of the definition contained in section 1 of the Basic Provisions'' prior to the description. Since the CCIP Basic Provisions and the Crop Provisions are separate components of the same crop insurance policy, adding the explicit statement, ''in lieu of,'' clarifies that the Crop Provisions definitions is intended to replace and override the definition in the CCIP Basic Provisions. It will provide clear use of the definition and its application to the individual Crop Provisions. This change will be made in the following Crop Provisions:

- Arizona-California Citrus Crop Insurance Provisions (7 CFR 457.121);
- California Avocado Crop Insurance Provisions (7 CFR 457.175);
- Macadamia Nut Crop Insurance Provisions (7 CFR 457.131);
- Peach Crop Insurance Provisions (7 CFR 457.153);
- Pear Crop Insurance Provisions (7 CFR 457.111);

• Pecan Revenue Crop Insurance Provisions (7 CFR 457.167);
• Prune Crop Insurance Provisions (7 CFR 457.133);
• Stonefruit Crop Insurance Provisions (7 CFR 457.159); and
• Table Grape Crop Insurance Provisions (7 CFR 457.149).

FCIC is clarifying that the definition for ''production guarantee'' in the Onion Crop Insurance Provisions (7 CFR 457.135) overrides the definition in the CCIP Basic Provisions, by adding the statement ''In lieu of the definition contained in section 1 of the Basic Provisions'' prior to the description. It will clarify the use of the definition and its application to the Onion Crop Insurance Provisions.

FCIC is replacing the term ''FSA farm serial number'' with the term ''FSA farm number,'' because the term ''FSA farm serial number'' is no longer used. A similar change was already implemented in the CCIP Basic Provisions in 2017 when the definition was changed to remove the word ''serial.'' This change will be made in the following Crop Provisions:
• Arizona-California Citrus Crop Insurance Provisions (7 CFR 457.121);
• Cranberry Crop Insurance Provisions (7 CFR 457.132);
• Florida Avocado Crop Insurance Provisions (7 CFR 457.173);
• Macadamia Nut Crop Insurance Provisions (7 CFR 457.131);
• Prune Crop Insurance Provisions (7 CFR 457.133);
• Stonefruit Crop Insurance Provisions (7 CFR 457.159); and
• Table Grape Crop Insurance Provisions (7 CFR 457.149).

FCIC is correcting the location of certain information (for example, price elections and fresh fruit factors) by replacing ''Special Provisions'' with ''actuarial documents.'' This change will be made in the following Crop Provisions:
• Cabbage Crop Insurance Provisions (7 CFR 457.171);
• Florida Avocado Crop Insurance Provisions (7 CFR 457.173);
• Fresh Market Pepper Crop Insurance Provisions (7 CFR 457.148);
• Fresh Market Sweet Corn Crop Insurance Provisions (7 CFR 457.129);
• Fresh Market Tomato Dollar Plan Crop Insurance Provisions (7 CFR 457.139);
• Guaranteed Production Plan of Fresh Market Tomato Crop Insurance Provisions (7 CFR 457.128);
• Macadamia Nut Crop Insurance Provisions (7 CFR 457.131);
• Onion Crop Insurance Provisions (7 CFR 457.135);
• Peach Crop Insurance Provisions (7 CFR 457.153);
• Prune Crop Insurance Provisions (7 CFR 457.133); and
• Texas Citrus Crop Insurance Provisions (7 CFR 457.119).

FCIC is updating prices and yields in settlement of claim examples so they are more reflective of current values and potential indemnities. This change will be made in the following Crop Provisions:
• Blueberry Crop Insurance Provisions (7 CFR 457.166);
• Forage Production Crop Insurance Provisions (7 CFR 457.117);
• Fresh Market Sweet Corn Crop Insurance Provisions (7 CFR 457.129);
• Onion Crop Insurance Provisions (7 CFR 457.135);
• Prune Crop Insurance Provisions (7 CFR 457.133); and
• Stonefruit Crop Insurance Provisions (7 CFR 457.159).

In addition, FCIC is updating years used in examples in the following Crop Provisions to be more current:
• Arizona-California Citrus Fruit Crop Insurance Provisions (7 CFR 457.121); and
• Macadamia Nut Crop Insurance Provisions (7 CFR 457.131).

FCIC is clarifying how coverage level impacts the production guarantee in the settlement of a claim examples, by showing the calculation of coverage level multiplied by the approved yield equals the production guarantee in Step 1 of the example. The remaining steps in the settlement of the claim examples continue to use the production guarantee. This change will be made in the following Crop Provisions:
• Prune Crop Insurance Provisions (7 CFR 457.133); and
• Stonefruit Crop Insurance Provisions (7 CFR 457.159).

FCIC is clarifying where the settlement of claim example begins in the Macadamia Nut Crop Insurance Provisions (7 CFR 457.131), by inserting ''For example'' after the introductory text.

FCIC is revising the sub-heading for section 3 to ''Insurance Guarantees, Coverage Levels, and Prices'' by removing the phrase ''for Determining Indemnities'' at the end. Removing this phrase will align the sub-heading to match the corresponding section in the CCIP Basic Provisions. It also helps clarify that price is not exclusively used to determine indemnities; it is also used to establish the guarantee and determine the premium due for the producer. This change will be made in the following Crop Provisions:
• Arizona-California Citrus Crop Insurance Provisions (7 CFR 457.121);
• Blueberry Crop Insurance Provisions (7 CFR 457.166);
• Cabbage Crop Insurance Provisions (7 CFR 457.171);
• California Avocado Crop Insurance Provisions (7 CFR 457.175);
• Cranberry Crop Insurance Provisions (7 CFR 457.132);
• Florida Avocado Crop Insurance Provisions (7 CFR 457.173);
• Forage Production Crop Insurance Provisions (7 CFR 457.117);
• Guaranteed Production Plan of Fresh Market Tomato Crop Insurance Provisions (7 CFR 457.128);
• Macadamia Nut Crop Insurance Provisions (7 CFR 457.131);
• Onion Crop Insurance Provisions (7 CFR 457.135);
• Peach Crop Insurance Provisions (7 CFR 457.153);
• Pecan Revenue Crop Insurance Provisions (7 CFR 457.167);
• Pear Crop Insurance Provisions (7 CFR 457.111);
• Prune Crop Insurance Provisions (7 CFR 457.133);
• Stonefruit Crop Insurance Provisions (7 CFR 457.159);
• Table Grape Crop Insurance Provisions (7 CFR 457.149);
• Texas Citrus Crop Insurance Provisions (7 CFR 457.119);

FCIC is correcting the dates, states, and counties associated with the contract change dates, the cancellation and termination dates, and end of insurance period dates, where necessary, to match current coverage areas and dates in the actuarial documents. This change will specify the states and counties that currently have coverage available for the following Crop Provisions:
• Cabbage Crop Insurance Provisions (7 CFR 457.171);
• Fresh Market Sweet Corn Crop Insurance Provisions (7 CFR 457.129);
• Guaranteed Production Plan of Fresh Market Tomato Crop Insurance Provisions (7 CFR 457.128); and
• Onion Crop Insurance Provisions (7 CFR 457.135).

FCIC is updating the effective year to show the year that the changes in the Crop Provision will apply. This change will be made in the introductory paragraph of the following Crop Provisions:
• Arizona-California Citrus Fruit Crop Insurance Provisions (7 CFR 457.121);
• Blueberry Crop Insurance Provisions (7 CFR 457.166);
• Cabbage Crop Insurance Provisions (7 CFR 457.171);
• California Avocado Crop Insurance Provisions (7 CFR 457.175);
• Cranberry Crop Insurance Provisions (7 CFR 457.132);
• Florida Avocado Crop Insurance Provisions (7 CFR 457.173);

• Forage Production Crop Insurance Provisions (7 CFR 457.117);
• Fresh Market Pepper Crop Insurance Provisions (7 CFR 457.148);
• Fresh Market Sweet Corn Crop Insurance Provisions (7 CFR 457.129);
• Fresh Market Tomato (dollar plan) Crop Insurance Provisions (7 CFR 457.139);
• Guaranteed Production Plan of Fresh Market Tomato Crop Insurance Provisions (7 CFR 457.128);
• Macadamia Nut Crop Insurance Provisions (7 CFR 457.131);
• Onion Crop Insurance Provisions (7 CFR 457.135);
• Peach Crop Insurance Provisions (7 CFR 457.153);
• Pear Crop Insurance Provisions (7 CFR 457.111);
• Pecan Revenue Crop Insurance Provisions (7 CFR 457.167);
• Prune Crop Insurance Provisions (7 CFR 457.133);
• Stonefruit Crop Insurance Provisions (7 CFR 457.159);
• Table Grape Crop Insurance Provisions (7 CFR 457.149); and
• Texas Citrus Crop Insurance Provisions (7 CFR 457.119).

FCIC is clarifying ''agree in writing'' by replacing with the defined term ''written agreement'' in the Onion Crop Insurance Provisions (7 CFR 457.135). ''Written agreement'' is specifically defined in the CCIP Basic Provisions. The use of ''agree in writing'' was intended to mean that the producer must have a written agreement. However, it has generated questions in the past because it had a different wording than the definition.

FCIC is removing a duplicate paragraph from section 7 in the Peach Crop Insurance Provisions (7 CFR 457.153).

In the Peach Crop Insurance Provisions (7 CFR 457.153), FCIC is clarifying that a producer may choose optional units for the fresh and processing intended uses, but not further divide optional units by the types of peaches specified in the Special Provisions. An optional unit is a type of crop insurance unit. Crop insurance units are an identifiable, insurable segment of land on which an insurable crop is grown, and separate production records have been kept. Insuring by optional units, with fresh peaches and processing peaches insured on different optional units, is the producer's choice. In the Special Provisions, the fresh and processing intended uses are further classified by types of peaches, but the Special Provisions are silent on whether a producer can choose separate optional units for different types of peaches, which has led to questions from producers and AIPs. The further classification of types allows for distinct pricing, rates, and yields, but were not intended to allow separate optional units. Removing ''as specified in the Special Provisions'' clarifies the availability of optional units to ''fresh and processing'' intended uses only.

In the Fresh Market Pepper Crop Insurance Provisions (7 CFR 457.148) and the Fresh Market Sweet Corn Crop Insurance Provisions (7 CFR 457.129), FCIC is clarifying the definition of ''planted acreage'' by adding the section reference number in the definition (that is, adding ''section 1 of'').

In the Prune Crop Insurance Provisions (7 CFR 457.133), FCIC is clarifying the definition for ''standard prunes'' by specifically referencing the U.S. Standards for Grades of Dried Prunes.

In the Macadamia Nut Crop Insurance Provisions (7 CFR 457.131), FCIC is correcting the order of the definitions by redesignating the definition of ''floaters'' in alphabetical order.

In the Florida Avocado Crop Insurance Provisions (7 CFR 457.173), FCIC is adding ''mid-season'' avocados to the definition of type to align with the avocado industry designations for early, mid, and late-season avocados more appropriately. This change will allow producers to better align the mid-season varieties' insurance coverage with growing practices and the harvest period.

In the Fresh Market Pepper Crop Insurance Provisions (7 CFR 457.148), FCIC is correcting the reference of section 7 of the Basic Provisions (that is, adding ''and Administrative Fees'') to complete the full name of the section title to match how it appears in the CCIP Basic Provisions.

FCIC is amending the Blueberry Crop Insurance Provisions (7 CFR 457.166). Specifically, changing ''became'' to ''become'' in section 6 paragraph (a)(2)(i) and changing the word ''for'' to lowercase in the section title.

FCIC is changing non-primary words to lowercase and removing periods from the end of section headings for consistency across provisions. This change will be made in the following Crop Provisions:
• Blueberry Crop Insurance Provisions (7 CFR 457.166);
• Cabbage Crop Insurance Provisions (7 CFR 457.171);
• Fresh Market Tomato (dollar plan) Crop Insurance Provisions (7 CFR 457.139);
• Onion Crop Insurance Provisions (7 CFR 457.135);
• Peach Crop Insurance Provisions (7 CFR 457.153);
• Pecan Revenue Crop Insurance Provisions (7 CFR 457.167);
• Stonefruit Crop Insurance Provisions (7 CFR 457.159); and
• Table Grape Crop Insurance Provisions (7 CFR 457.149).

In the Fresh Market Sweet Corn Crop Insurance Provisions (7 CFR 457.129), FCIC is correcting the spelling of ''totaling'' in section 14 paragraph (b)(3).

In the Pecan Revenue Crop Insurance Provisions (7 CFR 457.167), FCIC is correcting the spelling of ''notwithstanding.''

In the Guaranteed Production Plan of Fresh Market Tomato Crop Insurance Provisions (7 CFR 457.128), FCIC is correcting the spelling of ''Guarantee'' to ''Guaranteed.''

In the Peach Crop Insurance Provisions (7 CFR 457.153), FCIC is changing ''allow'' to ''provide'' for consistency with the actuarial documents. In addition, FCIC is adding the word ''the'' preceding ''trees'' for grammatical sufficiency and readability. The reference is specific to ''the'' trees bearing insured peaches under the policy.

FCIC is correcting punctuation in bulleted lists by adding a semi colon or adding ''and'' after the semi-colon. This change will be made in the following Crop Provisions:
• Fresh Market Pepper Crop Insurance Provisions (7 CFR 457.148);
• Fresh Market Sweet Corn Crop Insurance Provisions (7 CFR 457.129); and
• Fresh Market Tomato (dollar plan) Crop Insurance Provisions (7 CFR 457.139).

In the Pecan Revenue Crop Insurance Provisions (7 CFR 457.167), FCIC is changing ''reject'' to ''not accept'' in two places, referring to how the AIP processes a producer's submitted application. The Pecan Revenue Crop Insurance Provisions refer to section 2 of the CCIP Basic Provisions, which provide the grounds for an application to not be accepted, but the word ''reject'' does not appear in the CCIP Basic Provisions. In the same paragraph of the Pecan Revenue Crop Insurance Provisions, FCIC is removing the phrase ''of the application,'' because it was incorrectly listed as appearing in section 2 of the CCIP Basic Provisions.

FCIC is removing the definition of ''adapted'' from the Table Grape Crop Insurance Provisions (7 CFR 457.149). The definition referred to a list of grape varieties by county recognized by National Institute of Food and Agriculture as compatible with agronomic and weather conditions in the county. However, the National Institute of Food and Agriculture does

not maintain a list of adapted grape varieties. Other federally reinsured Crop Provisions do not define ''adapted.'' The plain meaning of the word has been sufficient in other Crop Provisions without generating questions. Therefore, the definition is removed in the Table Grape Crop Insurance Provisions.

FCIC is removing repetitive parenthetical titles that reference the CCIP Basic Provisions for consistency. For example, this change deletes the parenthetical title (Insurance Guarantees, Coverage Levels, and Prices for Determining Indemnities) in the sentence ''In addition to the requirements of section 3 (Insurance Guarantees, Coverage Levels, and Prices for Determining Indemnities) of the Basic Provisions.'' In other Crop Provisions, the parenthetical title does not appear. This change will make Crop Provisions more consistent. This change will remove parenthetical titles in the following Crop Provisions:

- Cranberry Crop Insurance Provisions (7 CFR 457.132); and
- Guaranteed Production Plan of Fresh Market Tomato Crop Insurance Provisions (7 CFR 457.128).

The CCIP Basic Provisions includes the priority order of policy provisions. Therefore, in the following Crop Provisions, FCIC is removing the introductory sentence explaining the order of priority of policy provisions because it is duplicative of the same order of priority included in the CCIP Basic Provisions:

- Blueberry Crop Insurance Provisions (7 CFR 457.166);
- Cranberry Crop Insurance Provisions (7 CFR 457.132);
- Fresh Market Pepper Crop Insurance Provisions (7 CFR 457.148); and
- Guaranteed Production Plan of Fresh Market Tomato Crop Insurance Provisions (7 CFR 457.128).

In the Stonefruit Crop Insurance Provisions (7 CFR 457.159), in section 3, FCIC is adding paragraph (d). The new paragraph clarifies that a producer may not increase their elected or assigned coverage level or the ratio of their price election to the maximum price election if a cause of loss that could or would reduce the yield of the insured crop is evident prior to the time that the producer requests the increase. These changes to section 3 were proposed in the Common Crop Insurance Policy Basic Provisions; Stonefruit Crop Provisions proposed rule, published in the **Federal Register** on November 24, 2009 (74 FR 61286–61289). The change in the Common Crop Insurance Regulations; Stonefruit Crop Insurance Provisions final rule, published in the **Federal Register** on July 29, 2010 (75 FR 44709–44718), was not completed in the Code of Federal Regulations. Further, a technical correction for the change to the Stonefruit Crop Insurance Provisions was published in the **Federal Register** on September 27, 2010 (75 FR 59057–59058). The intended change was not completed correctly. This rule is making the required technical corrections to make that change now.

Effective Date, Notice and Comment, and Exemptions

The Administrative Procedure Act (APA, 5 U.S.C. 553) provides that the notice and comment and 30-day delay in the effective date provisions do not apply when the rule involves specified actions, including matters relating to contracts. This rule governs contracts for crop insurance policies and therefore falls within that exemption.

This rule is exempt from the regulatory analysis requirements of the Regulatory Flexibility Act (5 U.S.C. 601–612), as amended by the Small Business Regulatory Enforcement Fairness Act of 1996. The requirements for the regulatory flexibility analysis in 5 U.S.C. 603 and 604 are specifically tied to the requirement for a proposed rule under 5 U.S.C. 553 or any other law; in addition, the definition of rule in 5 U.S.C. 601 is tied to the publication of a proposed rule.

For major rules, the Congressional Review Act requires a delay of the effective date of 60 days after publication to allow for Congressional review. This rule is not a major rule under the Congressional Review Act, as defined by 5 U.S.C. 804(2). Therefore, this final rule is effective on the date of publication in the **Federal Register**. Although not required by APA or any other law, FCIC has chosen to request comments on this rule.

Executive Orders 12866 and 13563

Executive Order 12866, ''Regulatory Planning and Review,'' and Executive Order 13563, ''Improving Regulation and Regulatory Review,'' direct agencies to assess all costs and benefits of available regulatory alternatives and, if regulation is necessary, to select regulatory approaches that maximize net benefits (including potential economic, environmental, public health and safety effects, distributive impacts, and equity). Executive Order 13563 emphasized the importance of quantifying both costs and benefits, of reducing costs, of harmonizing rules, and of promoting flexibility. The requirements in Executive Orders 12866 and 13563 for the analysis of costs and benefits apply to rules that are determined to be significant or economically significant.

The Office of Management and Budget (OMB) has designated this rule as not significant under Executive Order 12866, ''Regulatory Planning and Review,'' and therefore, OMB has not reviewed this rule and analysis of the costs and benefits is not required under either Executive Order 12866 or 13563.

Clarity of the Regulation

Executive Order 12866, as supplemented by Executive Order 13563, requires each agency to write all rules in plain language. In addition to your substantive comments on this rule, we invite your comments on how to make the rule easier to understand. For example:

- Are the requirements in the rule clearly stated? Are the scope and intent of the rule clear?
- Does the rule contain technical language or jargon that is not clear?
- Is the material logically organized?
- Would changing the grouping or order of sections or adding headings make the rule easier to understand?
- Could we improve clarity by adding tables, lists, or diagrams?
- Would more, but shorter, sections be better? Are there specific sections that are too long or confusing?
- What else could we do to make the rule easier to understand?

Environmental Review

The environmental impacts of this final rule have been considered in a manner consistent with the provisions of the National Environmental Policy Act (NEPA, 42 U.S.C. 4321–4347), the regulations of the Council on Environmental Quality (40 CFR parts 1500–1508), and because USDA will be making the payments to producers, the USDA regulation for compliance with NEPA (7 CFR part 1b). As specified in 7 CFR 1b.4(b)(4), FCIC is categorically excluded from the preparation of an Environmental Analysis or Environmental Impact Statement unless the FCIC Manager (agency head) determines that an action may have a significant environmental effect. The FCIC Manager has determined this rule will not have a significant environmental effect. Therefore, FCIC will not prepare an environmental assessment or environmental impact statement for this action and this rule serves as documentation of the programmatic environmental compliance decision.

Executive Order 12988

This rule has been reviewed under Executive Order 12988, ''Civil Justice

Reform.'' This rule will not preempt State or local laws, regulations, or policies unless they represent an irreconcilable conflict with this rule. Before any judicial actions may be brought regarding the provisions of this rule, the administrative appeal provisions of 7 CFR part 11 are to be exhausted.

Executive Order 13175

This rule has been reviewed in accordance with the requirements of Executive Order 13175, ''Consultation and Coordination with Indian Tribal Governments.'' Executive Order 13175 requires Federal agencies to consult and coordinate with Tribes on a government-to-government basis on policies that have Tribal implications, including regulations, legislative comments or proposed legislation, and other policy statements or actions that have substantial direct effects on one or more Indian Tribes, on the relationship between the Federal Government and Indian Tribes or on the distribution of power and responsibilities between the Federal Government and Indian Tribes.

RMA has assessed the impact of this rule on Indian Tribes and determined that this rule does not, to our knowledge, have Tribal implications that require Tribal consultation under E.O. 13175. The regulation changes do not have Tribal implications that preempt Tribal law and are not expected have a substantial direct effect on one or more Indian Tribes. If a Tribe requests consultation, RMA will work with the USDA Office of Tribal Relations to ensure meaningful consultation is provided where changes, additions and modifications identified in this rule are not expressly mandated by Congress.

The Unfunded Mandates Reform Act of 1995

Title II of the Unfunded Mandates Reform Act of 1995 (UMRA, Pub. L. 104–4) requires Federal agencies to assess the effects of their regulatory actions of State, local, and Tribal governments, or the private sector. Agencies generally must prepare a written statement, including cost benefits analysis, for proposed and final rules with Federal mandates that may result in expenditures of $100 million or more in any 1 year for State, local or Tribal governments, in the aggregate, or to the private sector. UMRA generally requires agencies to consider alternatives and adopt the more cost effective or least burdensome alternative that achieves the objectives of the rule. This rule contains no Federal mandates, as defined in Title II of UMRA, for State, local, and Tribal governments, or the private sector. Therefore, this rule is not subject to the requirements of sections 202 and 205 of UMRA.

Federal Assistance Program

The title and number of the Assistance Listing,[1] to which this rule applies is No. 10.450—Crop Insurance.

Paperwork Reduction Act of 1995

In accordance with the provisions of the Paperwork Reduction Act of 1995 (44 U.S.C. chapter 35, subchapter I), the rule does not change the information collection approved by OMB under control numbers 0563–0053.

USDA Non-Discrimination Policy

In accordance with Federal civil rights law and USDA civil rights regulations and policies, USDA, its Agencies, offices, and employees, and institutions participating in or administering USDA programs are prohibited from discriminating based on race, color, national origin, religion, sex, gender identity (including gender expression), sexual orientation, disability, age, marital status, family or parental status, income derived from a public assistance program, political beliefs, or reprisal or retaliation for prior civil rights activity, in any program or activity conducted or funded by USDA (not all bases apply to all programs). Remedies and complaint filing deadlines vary by program or incident.

Persons with disabilities who require alternative means of communication for program information (for example, braille, large print, audiotape, American Sign Language, etc.) should contact the responsible Agency or USDA TARGET Center at (202) 720–2600 or 844–433–2774 (toll-free nationwide). Additionally, program information may be made available in languages other than English. To file a program discrimination complaint, complete the USDA Program Discrimination Complaint Form, AD–3027, found online at *https://www.usda.gov/oascr/how-to-file-a-program-discrimination-complaint* and at any USDA office or write a letter addressed to USDA and provide in the letter all the information requested in the form. To request a copy of the complaint form, call (866) 632–9992. Submit your completed form or letter to USDA by mail to: U.S. Department of Agriculture, Office of the Assistant Secretary for Civil Rights, 1400 Independence Avenue SW, Washington, DC 20250–9410 or email: *OAC@usda.gov.*

USDA is an equal opportunity provider, employer, and lender.

[1] See *https://sam.gov/content/assistance-listings.*

List of Subjects

7 CFR Part 407

Acreage allotments, Administrative practice and procedure, Barley, Corn, Cotton, Crop insurance, Peanuts, Reporting and recordkeeping requirements, Sorghum, Soybeans, Wheat.

7 CFR Part 457

Acreage allotments, Crop insurance, Reporting and recordkeeping requirements.

For the reasons discussed in the supplementary information, FCIC amends 7 CFR parts 407 and 457, effective for the 2023 and succeeding crop years for crops with a contract change date on or after June 30, 2022, and for the 2024 and succeeding crop years for all other crops, as follows:

PART 407—AREA RISK PROTECTION INSURANCE REGULATIONS

■ 1. The authority citation for part 407 continues to read as follows:

Authority: 7 U.S.C. 1506(l) and 1506(o).

■ 2. Amend § 407.9 by:
■ a. In section 1:
■ i. Add in alphabetical order definitions for ''Farm management record'' and ''Production record'';
■ ii. Revise the definition for ''Production report''; and
■ iii. Remove the definition for ''Verifiable records'' and add the definition for ''Verifiable record'' in alphabetical order;
■ b. In section 8, paragraph (o), remove the phrase ''records to support the information on'' and add ''acceptable production records to support the information you certified on'' in its place;
■ c. In section 23:
■ i. Add paragraph (b)(1)(i) and (ii);
■ ii. Remove paragraph (b)(2); and
■ iii. Redesignate paragraph (b)(3) as paragraph (b)(2).

The revisions and additions read as follows:

§ 407.9 Area Risk Protection Insurance Regulations.

* * * * *

1. Definitions

* * * * *

Farm management record. A contemporaneous record provided by you that documents your actual production recorded at the time of harvest, storing of the crop, or use of the crop for feed, and can be used to substantiate your actual production reported on the production report.

* * * * *

Production record. A written record that documents your actual production reported on the production report. The record must be an acceptable verifiable record or an acceptable farm management record as authorized by FCIC procedures.

Production report. A written report provided by you showing your annual production in accordance with section 8. The report contains yield information for the current year, including planted acreage and production. This report must be supported by acceptable production records.

* * * * *

Verifiable record. A contemporaneous record from a disinterested third party that substantiates your actual production reported on the production report. The record must be a document or evidence from a disinterested third party that is accurate and can be validated or verified by us.

* * * * *

23. Mediation, Arbitration, Appeal, Reconsideration, and Administrative and Judicial Review

* * * * *

(b) * * *

(1) * * *

(i) If you disagree with our decision of what constitutes a good farming practice you may request through us that FCIC review our decision. Requests for FCIC review must be made within 30 days of the postmark date on the written notice of the determination regarding good farming practices.

(ii) You may not sue us for our decisions regarding whether good farming practices were used by you. You must request a determination from FCIC of what constitutes a good farming practice before filing any suit against FCIC.

* * * * *

PART 457—COMMON CROP INSURANCE REGULATIONS

■ 3. The authority citation for part 457 continues to read as follows:

Authority: 7 U.S.C. 1506(l), 1506(o).

■ 4. Amend § 457.8 by:

■ a. In the introductory section, remove paragraphs (c) through (f);

■ b. In section 1:

■ i. Add in alphabetical order definitions for ''Direct marketing'', ''Farm management record'', and ''Production record'';

■ ii. Revise the definition for ''Production report''; and

■ iii. Remove the definition for ''Verifiable records'' and add the definition for ''Verifiable record'' in alphabetical order;

■ c. In section 3:

■ i. Revise paragraph (g)(3); and

■ ii. Revise paragraph (h)(3);

■ d. In section 6:

■ i. In paragraph (c)(4), remove the word ''and'';

■ ii. In paragraph (c)(5), remove the period at the end of the sentence and add ''; and'' in its place; and

■ iii. Add paragraph (c)(6);

■ e. In section 15:

■ i. Revise the section heading;

■ ii. In paragraph (b)(1), remove the words ''verifiable records'' and add ''acceptable verifiable records or acceptable farm management records'' in their place; and

■ iii. Revise paragraph (b)(3)(ii);

■ f. In section 20, revise paragraph (d)(1); and

■ g. Add new section 38.

The revisions and additions read as follows:

§ 457.8 The application and policy.

* * * * *

Common Crop Insurance Policy

* * * * *

1. Definitions

* * * * *

Direct Marketing. The sale of the insured crop directly to consumers without the intervention of an intermediary such as a wholesaler, retailer, packer, processor, shipper, buyer, or broker. Production records are controlled exclusively by the policyholder. Examples of direct marketing include selling through an on-farm or roadside stand, a farmer's market, or permitting the general public to enter the acreage for the purpose of harvesting or picking all or a portion of the crop. Only the portion of the crop sold directly to consumers will be considered direct marketed.

* * * * *

Farm management record. A contemporaneous record provided by you that documents your actual production recorded at the time of harvest, storing of the crop, or use of the crop for feed, and can be used to substantiate your actual production reported on the production report.

* * * * *

Production record. A written record that documents your actual production reported on the production report. The record must be an acceptable verifiable record or an acceptable farm management record as authorized by FCIC procedures.

* * * * *

Production report. A written report provided by you showing your annual production that will be used by us to determine your yield for insurance purposes in accordance with section 3. The report contains yield information for the previous year(s), including planted acreage and production. This report must be supported by acceptable production records.

* * * * *

Verifiable record. A contemporaneous record from a disinterested third party that substantiates your actual production reported on the production report. The record must be a document or evidence from a disinterested third party that is accurate and can be validated or verified by us.

* * * * *

3. Insurance Guarantees, Coverage Levels, and Prices

* * * * *

(g) * * *

(3) If you do not have acceptable production records to support the information you certified on your production report you will receive an assigned yield in accordance with section 3(f)(1) and 7 CFR part 400, subpart G, for the applicable units, determined by us, for crop years that do not have such production records in accordance with FCIC procedures. If the conditions of section 34(b)(3) are not met, you will receive an assigned yield for the applicable basic unit.

* * * * *

(h) * * *

(3) To an amount consistent with the production method actually carried out for the crop year if you use a different production method than was previously used and the production method actually carried out is likely to result in a yield lower than the average of your previous actual yields.

(i) The yield will be adjusted to the lower of the:

(A) Approved APH yield for the APH database;

(B) Average of approved APH yields based on your other APH databases where the production method was carried out; or

(C) Applicable county transitional yield for the production method if other such APH databases do not exist.

(ii) You must notify us of changes in your production method by the acreage reporting date. If you fail to notify us, in addition to the reduction of your approved yield described herein, you will be considered to have misreported information and you will be subject to the consequences in section 6(g). For example, for a non-irrigated APH database, your yield is based upon acreage of the crop that is watered once

prior to planting, and the crop is not watered prior to planting for the current crop year. Your approved APH yield will be reduced to an amount consistent with the actual production history of your other non-irrigated APH database where the crop has not been watered prior to planting or limited to the non-irrigated transitional yield for the APH database if other such APH databases do not exist.

* * * * *

6. Report of Acreage

* * * * *

(c) * * *

(6) Acknowledgement of your duty to notify us if you intend to direct market your crop or if acceptable verifiable records are required and will not be available. This acknowledgement must also include a signed marketing certification if required in section 38.

* * * * *

15. Production Included in Determining an Indemnity and Payment Reductions

* * * * *

(b) * * *

(3) * * *

(ii) You harvest before the end of the insurance period, your harvested production will be used to adjust the loss, unless:

(A) The applicable crop provisions require an appraisal prior to harvest and you are unable to prove that additional insured causes of loss occurred after the appraisal or deterioration of the crop can be attributed to insurable causes after the appraisal was completed; then your appraised production will be used to adjust the loss; or

(B) You intend to direct market your crop or your production records will not be from a disinterested third party and we determine an appraisal prior to harvest was necessary and you are unable to prove that additional insured causes of loss occurred after the appraisal or deterioration of the crop can be attributed to insurable causes after the appraisal was completed; then your appraised production will be used to adjust the loss.

* * * * *

20. Mediation, Arbitration, Appeal, Reconsideration, and Administrative and Judicial Review

* * * * *

(d) * * *

(1) * * *

(i) If you disagree with our determination of the amount of assigned production, you must use the arbitration or mediation process contained in this section.

(ii) If you disagree with our decision of what constitutes a good farming practice you may request through us that FCIC review our decision. Requests for FCIC review must be made within 30 days of the postmark date on the written notice of the determination regarding good farming practices.

(iii) You may not sue us for our decisions regarding whether good farming practices were used by you. You must request a determination from FCIC of what constitutes a good farming practice before filing any suit against FCIC.

* * * * *

38. Direct Marketing and Verifiable Records

(a) You must notify us and complete the marketing certification if you intend to direct market any portion of the crop, or if acceptable verifiable records are required and will not be available. It is your responsibility to assure you meet all the notification and completion requirements to be properly identified as in compliance with the provisions specified in this section.

(b) Notice and certification provisions:

(1) Provide us notice and complete a marketing certification by the acreage reporting date when any portion of the crop will be direct marketed, or if acceptable verifiable records are required and will not be available. If your marketing plans change after the acreage reporting date, then you must provide notice no later than 15 days prior to harvest of the crop. The notice may be made by telephone or in person. If a marketing certification is required, it must be completed in writing within 15 days of the initial notice.

(2) If you fail to notify us timely and complete the marketing certification in accordance with these provisions and if you do not have acceptable verifiable production records to support the information you certified on your production report, you will receive an assigned yield in accordance with 3(g).

(3) We may determine that the marketing certification is not required for your crop based on FCIC procedures.

(4) Appraisals prior to harvest may be conducted for production reporting purposes to be used in conjunction with your acceptable production records.

(i) If we determine an appraisal is necessary, we must notify you.

(ii) If you request an appraisal, you must notify us at least 15 days prior to harvest.

(5) Appraisals conducted for production reporting purposes may not be applicable for establishing total production to count under section 15 when the appraisal was conducted prior to our receipt of a notice of loss.

■ 5. Amend § 457.111 by:

■ a. In the undesignated introductory paragraph, remove the year ''2015'' and add ''2023'' in its place;

■ b. In section 1:

■ i. Remove the definition of ''Direct marketing''; and

■ ii. Revise the definition of ''Interplanted'';

■ c. Revise the section 3 heading;

■ d. In section 6, revise paragraph (c); and

■ e. In section 10, revise paragraph (b)(2).

The revisions read as follows:

§ 457.111 Pear Crop Insurance Provisions.

* * * * *

1. Definitions

* * * * *

Interplanted. In lieu of the definition contained in section 1 of the Basic Provisions, acreage on which two or more crops are planted in any form of alternating or mixed pattern.

* * * * *

3. Insurance Guarantees, Coverage Levels, and Prices

* * * * *

6. Insured Crop

* * * * *

(c) That are grown on trees that have produced an average of at least five (5) tons of pears per acre in at least one of the four previous crop years, unless otherwise allowed by the Special Provisions; and

* * * * *

10. Duties in the Event of Damage or Loss

* * * * *

(b) * * *

(2) If any portion of your crop will be direct marketed, you must notify us at least 15 calendar days before any production will be harvested. We will conduct an appraisal that will be used to determine your production to count for production that is sold by direct marketing. If damage occurs after this appraisal, we will conduct an additional appraisal. These appraisals, and any acceptable records provided by you, will be used to determine your production to count. Failure to give timely notice that production will be harvested for direct marketing will result in an appraised amount of production to count of not less than the production guarantee per acre if such failure results in our inability to make the required appraisal.

* * * * *

■ 6. Amend § 457.117 by:
■ a. In the undesignated introductory paragraph, remove the year ''2021'' and add ''2023'' in its place;
■ b. In section 1, remove the definition of ''Direct marketing'';
■ c. In section 2, revise the section heading;
■ d. In section 9, revise paragraph (b);
■ e. In section 10, in paragraph (b), revise Example 1 and Example 2;

The revisions read as follows:

§ 457.117 Forage Production Crop Insurance Provisions.

* * * * *

2. Insurance Guarantees, Coverage Levels, and Prices

* * * * *

9. Duties in the Event of Damage or Loss

* * * * *

(b) If any portion of your crop will be direct marketed, you must notify us at least 15 calendar days before any production will be harvested. Failure to give timely notice that production will be harvested for direct marketing will result in an appraised amount of production to count of not less than the production guarantee per acre if such failure results in our inability to make the required appraisal;

* * * * *

10. Settlement of Claim

* * * * *

(b) * * *

Example 1

Assume you have a 100 percent share in 100 acres of type A forage in the unit, with a guarantee of 3.0 tons per acre and a price election of $100 per ton. Due to adverse weather you were only able to harvest 50.0 tons. Your indemnity would be calculated as follows:

1. 100 acres type A × 3 tons = 300-ton guarantee;

2 & 3. 300 tons × $100 price election = $30,000 total value guarantee;

4 & 5. 50 tons production to count × $100 price election = $5,000 total value of production to count;

6. $30,000 value guarantee − $5,000 = $25,000 loss; and

7. $25,000 × 100 percent share = $25,000 indemnity payment.

Example 2

Assume you also have a 100 percent share in 100 acres of type B forage in the same unit, with a guarantee of 1.0 ton per acre and a price election of $90 per ton. Due to adverse weather you were only able to harvest 5.0 tons. Your total indemnity for forage production for both types A and B in the same unit would be calculated as follows:

1. 100 acres × 3 tons = 300-ton guarantee for type A and 100 acres × 1 ton = 100-ton guarantee for type B;

2. 300-ton guarantee × $100 price election = $30,000 total value of the guarantee for type A and 100-ton guarantee × $90 price election = $9,000 total value of the guarantee for type B;

3. $30,000 + $9,000 = $39,000 total value of the guarantee;

4. 50 tons × $100 price election = $5,000 total value of production to count for type A; and 5 tons × $90 price election = $450 total value of production to count for type B;

5. $5,000 + $450 = $5,450 total value of production to count for types A and B;

6. $39,000 − $5,450 = $33,550 loss; and

7. $33,550 loss × 100 percent share = $33,550 indemnity payment.

* * * * *

■ 7. Amend § 457.119 by:
■ a. In the undesignated introductory paragraph, remove the year ''2018'' and add ''2024'' in its place;
■ b. In section 1, remove the definition of ''Direct marketing'';
■ c. In section 3, revise the section heading;
■ d. In section 11, paragraph (b)(1) remove the words ''will be sold by'' wherever they appear and add ''will be harvested for'' in their place; and
■ e. In section 12, paragraph (e), remove the words ''Special Provisions'' and add in their place ''actuarial documents''.

The revisions read as follows:

§ 457.119 Texas Citrus Crop Insurance Provisions.

* * * * *

3. Insurance Guarantees, Coverage Levels, and Prices

* * * * *

■ 8. Amend § 457.121 as follows:
■ a. In the undesignated introductory paragraph, remove the year ''2015'' and add ''2024'' in its place;
■ b. In section 1:
■ i. Remove the definition of ''Direct marketing''; and
■ ii. Revise the definition of ''Interplanted'';
■ c. In section 2 paragraph (b), remove the word ''serial'';
■ d. In section 3:
■ i. Revise the section heading;
■ ii. In paragraph (b):
■ A. Remove the year ''2015'' and add ''2024'' in its place; and
■ B. Remove the year ''2013'' and add ''2022'' in its place;
■ e. In section 6, revise paragraph (f); and
■ f. In section 10, in paragraph (b)(1), remove the words ''will be sold by'' wherever they appear and add ''will be harvested for'' in their place each.

The revisions read as follows:

§ 457.121 Arizona-California citrus crop insurance provisions.

* * * * *

1. Definitions

* * * * *

Interplanted. In lieu of the definition contained in section 1 of the Basic Provisions, acreage on which two or more agricultural commodities are planted in any form of alternating or mixed pattern.

* * * * *

3. Insurance Guarantees, Coverage Levels, and Prices

* * * * *

6. Insured Crop

* * * * *

(f) That, unless otherwise allowed by the Special Provisions, is grown on trees that have reached at least:

(1) The sixth leaf year; or

(2) The fifth leaf year after topwork or grafting, if topwork or grafting occurs after set out.

* * * * *

■ 9. Amend § 457.128 by:
■ a. Revise the heading immediately following the section heading;
■ b. In the introductory text between ''(Appropriate title for insurance provider)'' and Section 1:
■ i. Remove the words ''Guarantee Production Plan'' and add ''Guaranteed Production Plan'' in their place; and
■ ii. Remove the sentence ''If a conflict exists among the policy provisions, the order of priority is as follows: (1) The Catastrophic Risk Protection Endorsement, if applicable; (2) the Special Provisions; (3) these Crop Provisions; and (4) the Basic Provisions with (1) controlling (2), etc.'';
■ c. In section 1, remove the definition of ''Direct marketing'';
■ d. In section 3:
■ i. Revise the section heading;
■ ii. In the introductory text, remove the words ''for Determining Indemnities''; and
■ iii. In paragraph (a), remove the words ''Special Provisions'' wherever they appear and add ''actuarial documents'' in their place each time;
■ e. In section 4, remove the number ''15'' and add ''31'' in its place;
■ f. In section 5, in the table, remove ''January 15'' and add ''January 31'' in their place;

The revisions read as follows:

§ 457.128 Guaranteed Production Plan of Fresh Market Tomato Crop Insurance Provisions.

The Guaranteed Production Plan of Fresh Market Tomato Crop Insurance Provisions for the 2023 and succeeding crop years are as follows:

* * * * *

3. Insurance Guarantees, Coverage Levels, and Prices

* * * * *

■ 10. Amend § 457.129 by:
■ a. Revise the undesignated introductory text;
■ b. In section 1:
■ i. In the definition of ''Allowable costs'', remove the words ''Special Provisions'' and add ''actuarial documents'' in their place; and
■ ii. Remove the definition of ''Direct marketing''; and
■ iii. In the definition of ''Minimum value'', remove the words'' ''Special Provisions'' and add ''actuarial documents'' in their place; and
■ iv. In the definition of ''Planted acreage'', remove the words ''the Basic Provisions'' and add ''section 1 of the Basic Provisions'' in their place;
■ c. In section 4, revise the table.
■ d. In section 5:
■ i. Revise the section heading;
■ ii. Revise the undesignated paragraph; and
■ iii. Revise the table;
■ e. In section 8, in paragraph (b)(3), add the word ''and'' at the end;
■ f. In section 13:
■ i. Revise paragraph (b); and
■ ii. In paragraph (c) remove the words ''sold by''; and add ''harvested for'' in their place;
■ g. In section 14:
■ i. In paragraph (b)(3) remove the word ''Totalling'' and add ''Totaling'' in its place;
■ ii. In paragraph (b)(5), revise the example; and
■ h. In section 16 paragraph (b)(1), remove the words ''Special Provisions'' and add ''actuarial documents'' in their place.

The revisions read as follows:

§ 457.129 Fresh Market Sweet Corn Crop Insurance Provisions.

The fresh market sweet corn crop insurance provisions for the 2023 and succeeding crop years in counties with a contract change date of November 30, and for the 2024 and succeeding crop years in counties with a contract change date of April 30, are as follows:

* * * * *

4. Contract Changes

* * * * *

State and county	Date
All Florida counties; and all Georgia counties for which the Special Provisions designate a fall planting period	April 30.
Toombs County, Georgia; and all other states	November 30.

* * * * *

5. Cancellation and Termination Dates

In accordance with section 2 of the Basic Provisions, the cancellation and termination dates are:

State and county	Cancellation and termination dates
Florida; and all Georgia counties for which the Special Provisions designate a fall planting period	July 31.
Alabama; and Toombs County, Georgia	February 15.
All other states	March 15.

* * * * *

13. Duties in the Event of Damage or Loss

* * * * *

(b) If any portion of your crop will be direct marketed, you must notify us at least 15 calendar days before any production will be harvested. We will conduct an appraisal that will be used to determine the value of your production to count for production that is sold by direct marketing. If damage occurs after this appraisal, we will conduct an additional appraisal if you notify us that additional damage has occurred. These appraisals, and/or any acceptable production records provided by you, will be used to determine the value of your production to count.

* * * * *

14. Settlement of a Claim

* * * * *

(b) * * *

(5) * * *

For example:

You have a 100 percent share in 65.3 acres of fresh market sweet corn in the unit (15.0 acres in stage 1 and 50.3 acres in the final stage), with a dollar amount of insurance of $1,000 per acre. The 15.0 acre field was damaged by flood and appraisals of the crop determined there was no potential production to be counted. From the 50.3 acre field, you are only able to harvest 5,627 containers of sweet corn. The net value of all sweet corn production sold ($3.50 per container) is greater than the Minimum Value per container ($3.30). The 5,627 containers sold × $3.50 average net value per container = $19,694.50 value of your production to count. Your indemnity would be calculated as follows:

(1) 15.0 acres × $1,000 amount of insurance = $15,000 and 50.3 acres × $1,000 amount of insurance = $50,300;

(2) $15,000 × .65 (percent for stage 1) = $9,750 and $50,300 × 1.00 (percent for final stage) = $50,300;

(3) $9,750 + $50,300 = $60,050 amount of insurance for the unit;

(4) $60,050 − $19,694.50 value of production to count = $40,355.50 loss;

(5) $40,355.50 × 100 percent share = $40,355.50 indemnity payment.

* * * * *

■ 11. Amend § 457.131 by:
■ a. In the undesignated introductory paragraph, remove the year ''2017'' and add ''2024'' in its place;
■ b. In section 1:
■ i. Remove the definition of ''Direct marketing'';
■ ii. Redesignate the definition of ''Floaters'' in alphabetical order; and
■ iii. Revise the definition of ''Interplanted'';

■ c. In section 2, remove the word ''serial'';
■ d. In section 3:
■ i. Revise the section heading;
■ ii. In paragraph (a), remove of the words ''Special Provisions'' and add ''actuarial documents'' in their place each time they occur; and
■ iii. In paragraph (d), remove the year ''2016'' and add ''2024'' in its place and remove the year ''2014'' and add the year ''2022'' in its place;
■ e. In section 6, revise paragraph (d);
■ f. In section 10, revise paragraph (b); and
■ g. In section 11, in paragraph (b)(7), add an introductory sentence to the undesignated example.

The revisions read as follows:

§ 457.131 Macadamia nut crop insurance provisions.

* * * * *

1. Definitions

* * * * *

Interplanted. In lieu of the definition contained in section 1 of the Basic Provisions, acreage on which two or more agricultural commodities are planted in any form of alternating or mixed pattern.

* * * * *

3. Insurance Guarantees, Coverage Levels, and Prices

* * * * *

6. Insured Crop

* * * * *

(d) That are grown on trees that have reached at least the fifth leaf year, including the fifth leaf year after grafting if grafting occurs after set out, unless otherwise allowed by the Special Provisions; and

* * * * *

10. Duties in the Event of Damage or Loss

* * * * *

(b) If any portion of your crop will be direct marketed, you must notify us at least 15 calendar days before any production will be harvested. We will conduct an appraisal that will be used to determine your production to count for production that is sold by direct marketing. If damage occurs after this appraisal, we will conduct an additional appraisal. These appraisals, and any acceptable records provided by you, will be used to determine your production to count. Failure to give timely notice that production will be harvested for direct marketing will result in an appraised amount of production to count of not less than the production guarantee per acre if such failure results in our inability to make the required appraisal.

* * * * *

11. Settlement of Claim

* * * * *

(b) * * *

(7) * * *

For example:

* * * * *

■ 12. Amend § 457.132 by:
■ a. In the introductory paragraph before section 1, remove the year ''1999'' and add ''2023'' in its place and remove the sentence ''If a conflict exists among the policy provisions, the order of priority is as follows: (1) The Catastrophic Risk Protection Endorsement, if applicable; (2) the Special Provisions; (3) these Crop Provisions; and (4) the Basic Provisions with (1) controlling (2), etc.'';
■ b. In section 2, remove the word ''serial'';
■ c. In section 3:
■ i. Revise the section heading; and
■ ii. In the undesignated introductory paragraph and paragraph (b), remove the parenthetical phrase ''(Insurance Guarantees, Coverage Levels, and Prices for Determining Indemnities)'';
■ d. In section 4, remove the parenthetical phrase ''(Contract Changes)'';
■ e. In section 5, remove the parenthetical phrase ''(Life of Policy, Cancellation, and Termination)'';
■ f. In section 6:
■ i. In the undesignated paragraph, remove the parenthetical phrase ''(Insured Crop)''; and
■ ii. Revise paragraph (d).
■ g. In section 7, paragraphs (a) and (b), remove the parenthetical phrase ''(Insurance Period)'';
■ h. In section 8:
■ i. In paragraph (a) remove the parenthetical phrase ''(Causes of Loss)''; and
■ ii. In paragraph (b) remove the parenthetical phrase ''(Cause of Loss)''; and
■ i. In the section 9 undesignated paragraph, remove the parenthetical phrase ''(Duties in the Event of Damage or Loss)''.

The revisions read as follows:

§ 457.132 Cranberry crop insurance provisions.

* * * * *

3. Insurance Guarantees, Coverage Levels, and Prices

* * * * *

6. Insured Crop

* * * * *

(d) That are grown on vines that have reached at least the fourth leaf year unless otherwise provided by the Special Provisions.

* * * * *

■ 13. Amend § 457.133 by:
■ a. In the undesignated introductory paragraph following the section heading, remove the year ''2013'' and add ''2023'' in its place;
■ b. In section 1:
■ i. Remove the definition of ''Direct marketing'';
■ ii. Revise the definition of ''Interplanted''; and
■ iii. In the definition of ''Standard prunes'', revise paragraph (a);
■ c. In section 2, remove the word ''serial'';
■ d. In section 3:
■ i. Revise the section heading; and
■ ii. In paragraph (a), remove the words ''Special Provisions'' and add ''actuarial documents'' in their place;
■ e. In section 6, remove the words ''growing season after being set out'' and add ''leaf year'' in their place;
■ f. In section 10, revise paragraph (b)(2); and
■ g. In section 11, in paragraph (b), revise Example 1 and Example 2.

The revisions and additions read as follows:

§ 457.133 Prune Crop Insurance Provisions.

* * * * *

1. Definitions

* * * * *

Interplanted. In lieu of the definition contained in section 1 of the Basic Provisions, acreage on which two or more crops are planted in any form of alternating or mixed pattern.

* * * * *

Standard prunes. * * *

(a) That grade ''C,'' ''U.S. Standard,'' or better in accordance with the United States Standards for Grades of Dried Prunes; or

* * * * *

3. Insurance Guarantees, Coverage Levels, and Prices

* * * * *

10. Duties in the Event of Damage or Loss

* * * * *

(b) * * *

(2) If any portion of your crop will be direct marketed, you must notify us at least 15 calendar days before any production will be harvested. We will conduct an appraisal that will be used to determine your production to count for production that is sold by direct marketing or is sold as fresh fruit production. If damage occurs after this

appraisal, we will conduct an additional appraisal. These appraisals, and any acceptable records provided by you, will be used to determine your production to count. Failure to give timely notice that production will be harvested for direct marketing or sold as fresh fruit will result in an appraised amount of production to count of not less than the production guarantee per acre if such failure results in our inability to make the required appraisal.

* * * * *

11. Settlement of Claim

* * * * *

(b) * * *

Example 1:

You select 75 percent coverage level, 100 percent of the price election, and have a 100 percent share in 50.0 acres of type A prunes in the unit. The approved yield is 2.5 tons per acre and your price election is $1,000 per ton. You harvest 10.0 tons. Your indemnity would be calculated as follows:

(1) 50.0 acres × 2.5 tons × 0.75 = 93.75-ton production guarantee;

(2) 93.75-ton guarantee × $1,000 price election = $93,750 value of production guarantee;

(4) 10.0 tons × $1,000 price election = $10,000 value of production to count;

(6) $93,750 − $10,000 = $83,750 loss; and

(7) $83,750 × 1.000 share = $83,750 indemnity payment.

Example 2:

In addition to the information in the first example, you have an additional 50.0 acres of type B prunes with 100 percent share in the same unit. The approved yield is 2.0 tons per acre and the price election is $900 per ton. You harvest 5.0 tons. Your total indemnity for both types A and B would be calculated as follows:

(1) 50.0 acres × 2.5 tons × 0.75 = 93.75-ton production guarantee for type A and 50.0 acres × 2.0 × 0.75 tons = 75.0-ton production guarantee for type B;

(2) 93.75-ton guarantee × $1,000 price election = $93,750 value of production guarantee for type A and 75.0-ton guarantee × $900 price election = $67,500 value production guarantee for type B;

(3) $93,750 + $67,500 = $ 161,250 total value of production guarantee;

(4) 10.0 tons × $1,000 price election = $10,000 value of production to count for type A and 5.0 tons × $900 price election = $4,500 value of production to count for type B;

(5) $10,000 + $4,500 = $14,500 total value of production to count;

(6) $161,250 − $14,500 = $146,750 loss; and

(7) $146,750 loss × 1.000 share = $146,750 indemnity payment.

* * * * *

■ 14. Amend § 457.135 by:

■ a. Revise the undesignated introductory paragraph following the section heading;

■ b. In section 1:

■ i. Remove the definition of ''Direct marketing''; and

■ ii. In the definition of ''Production guarantee (per acre)'', add introductory text;

■ c. In section 2, revise the section heading;

■ d. In section 3:

■ i. Revise the section heading; and

■ ii. In paragraph (a), remove the words ''Special Provisions provide'' and add ''actuarial documents provide'' in their place;

■ e. In section 4, revise the section heading;

■ f. In section 5:

■ i. Revise the section heading; and

■ ii. Revise the table;

■ g. In section 6, revise the section heading;

■ h. In section 9, in paragraph (a), remove the words ''we agree in writing to insure'' and add ''a written agreement insures'' in their place;

■ i. In section 13, revise paragraph (b); and

■ j. In section 14, in paragraph (b), revise the example.

The revisions read as follows:

§ 457.135 Onion crop insurance provisions.

The Onion Crop Insurance Provisions for the 2023 and succeeding crop years are as follows:

* * * * *

1. Definitions

* * * * *

Production guarantee (per acre). In lieu of the definition contained in section 1 of the Basic Provisions, the production guarantee will be determined by stage as follows:

* * * * *

2. Unit Division

* * * * *

3. Insurance Guarantees, Coverage Levels, and Prices

* * * * *

4. Contract Changes

* * * * *

5. Cancellation and Termination Dates

* * * * *

State & county	Cancellation date	Termination date
Arizona; Georgia; Uvalde County, Texas, and all Texas Counties lying south thereof	August 31	August 31.
Umatilla County, Oregon; and Walla Walla County, Washington	August 31	September 30.
All California Counties, except Lassen, Modoc, and Shasta	September 30	September 30.
All other states and counties	February 1	February 1.

* * * * *

6. Report of Acreage

* * * * *

13. Duties in the Event of Damage or Loss

* * * * *

(b) If any portion of your crop will be direct marketed, you must notify us at least 15 calendar days before any production will be harvested. We will conduct an appraisal that will be used to determine your production to count for production that is sold by direct marketing. If damage occurs after this appraisal, we will conduct an additional appraisal. These appraisals, and any acceptable records provided by you, will be used to determine your production to count. Failure to give timely notice that production will be harvested for direct marketing will result in an appraised amount of production to count that is not less than the production guarantee per acre if such failure results in our inability to make the required appraisal.

* * * * *

14. Settlement of Claim

* * * * *

(b) * * *

For Example:

You have a 100 percent share in 100 acres of a unit of transplanted storage onions with a production guarantee of 200 hundredweight per acre, and you select 100 percent of the price election

of $20.00 per hundredweight. Your crop suffers a covered cause of loss on 25 acres during the second stage which has a second stage production guarantee of 60 percent of the final stage production guarantee which equals 120 hundredweight per acre. The appraised production on the 25 acres was 2,500 hundredweight of onion production. Your harvested onion production on the remaining 75 acres is 16,000 hundredweight of harvested production to count. Your indemnity will be calculated as follows:

(1) 25 acres × 120 hundredweight (200 × .60) second stage production guarantee = 3,000 hundredweight, and 75 acres × 200 hundredweight final stage production guarantee = 15,000 hundredweight;

(2) 3,000 hundredweight second stage production guarantee × $20.00 price election = $60,000 value of second stage production guarantee, and 15,000 hundredweight final stage production guarantee × $20.00 price election = $300,000 value of final stage production guarantee;

(3) $60,000 value of second stage production guarantee + $300,000 value of final stage production guarantee = $360,000 total value of production guarantee;

(4) 500 hundredweight second stage production to count (from step 4 of the section 14(c)(1)(iv) example) × $20.00 price election = $10,000 value of second stage production to count, and 16,000 hundredweight final stage production to count × $20.00 price election = $320,000 value of final stage production to count;

(5) $10,000 value of second stage production to count + $320,000 value of final stage production to count = $330,000 total value of production to count;

(6) $360,000 total value of production guarantee − $330,000 total value of production to count = $30,000 value of loss; and

(7) $30,000 × 100 percent share = $30,000 indemnity payment.

* * * * *

■ 15. Amend § 457.139 by:

■ a. In the undesignated introductory paragraph following the section heading, remove the year ''2013'' and add ''2024'' in its place;

■ b. In section 1:

■ i. In the definition of ''Allowable cost'', remove the words'' ''Special Provisions'' and add ''actuarial documents'' in their place; and

■ ii. Revise the definition of ''Direct marketing''; and

■ iii. In the definition of ''Minimum value'', remove the words ''Special Provisions'' and add ''actuarial documents'' in their place;

■ c. In section 7, remove the words ''Actuarial Table'' and add ''actuarial documents'' in their place;

■ d. In section 9, paragraph (b)(1), remove the colon behind the word ''remains'';

■ e. In section 14:

■ i. In paragraph (c)(2)(i), remove the period after the word ''Provisions'' and add a semi-colon in its place;

■ ii. In paragraphs (c)(3) and (4), remove the words ''Special Provisions'' and add ''actuarial documents'' in their place each time they occur; and

■ f. In section 16:

■ i. Revise the section 16 header; and

■ ii. In paragraphs (b)(1) and (2), remove the words ''Special Provisions'' and add ''actuarial documents'' in their place each time they occur.

The revisions read as follows:

§ 457.139 Fresh Market Tomato Dollar Plan Crop Insurance Provisions.

* * * * *

1. Definitions

* * * * *

Direct marketing. In addition to the definition contained in section 1 of the Basic Provisions, the sale of the insured crop directly to consumers without the intervention of an intermediary including a registered handler.

* * * * *

16. Minimum Value Option

* * * * *

16. Amend § 457.148 by:

a. In the undesignated introductory paragraph following the section heading, remove the year ''1999'' and add ''2024'' in its place and remove the sentence ''If a conflict exists among the policy provisions, the order of priority is as follows: (1) The Catastrophic Risk Protection Endorsement, if applicable; (2) the Special Provisions; (3) these Crop Provisions; and (4) the Basic Provisions with (1) controlling (2), etc.'';

■ b. In section 1:

■ i. Remove the definition of ''Direct marketing''; and

■ ii. In the definition of ''Planted acreage'' remove the words ''the Basic Provisions'' and add ''section 1 of the Basic Provisions'' in their place;

■ c. Revise section 7;

■ d. In section 14, in paragraphs (c)(2) and (3), remove the words ''Special Provisions'' and add ''actuarial documents'' in their place each time they occur; and

■ e. In section 16, in paragraphs (b)(1)(i) and (ii), remove the words ''Special Provisions'' and add ''actuarial documents'' in their place each time they occur.

The revisions read as follows:

§ 457.148 Fresh Market Pepper Crop Insurance Provisions.

* * * * *

7. Annual Premium

In lieu of the premium amount determinations contained in section 7 (Annual Premium and Administrative Fees) of the Basic Provisions (§ 457.8), the annual premium amount for each cultural practice (for example, fall direct-seeded irrigated) is determined by multiplying the third stage amount of insurance per acre by the premium rate for the cultural practice as established in the actuarial documents, by the insured acreage, by your share at the time coverage begins, and by any applicable premium adjustment factors contained in the actuarial documents.

* * * * *

■ 17. Amend § 457.149 by:

■ a. In the undesignated introductory paragraph following the section heading, remove the year ''2010'' and add ''2023'' in its place;

■ b. In section 1:

■ i. Remove the definitions of ''Adapted'' and ''Direct marketing''; and

■ ii. Revise the definition of ''Interplanted'';

■ c. In section 2 paragraph (a)(2) and (b), remove the word ''serial'';

■ d. In section 3, revise the section heading;

■ e. In section 7:

■ i. Revise paragraph (e);

■ ii. Revise paragraph (f); and

■ f. In section 11:

■ i. Revise the section heading; and

■ ii. Revise paragraph (b).

The revisions read as follows:

§ 457.149 Table grape crop insurance provisions.

* * * * *

1. Definitions

* * * * *

Interplanted. In lieu of the definition contained in section 1 of the Basic Provisions, acreage on which two or more crops are planted in any form of alternating or mixed pattern.

* * * * *

3. Insurance Guarantees, Coverage Levels, and Prices

* * * * *

7. Insured Crop

* * * * *

(e) That, after being set out or grafted, have reached the number of leaf years designated by the Special Provisions; and

(f) That have produced an average of at least 150 lugs of table grapes per acre in at least one of the three crop years

immediately preceding the insured crop year, unless otherwise allowed by the Special Provisions.

* * * * *

11. Duties in the Event of Damage or Loss

* * * * *

(b) If any portion of your crop will be direct marketed, you must notify us at least 15 calendar days before any production will be harvested. We will conduct an appraisal that will be used to determine your production to count for production that is sold by direct marketing. If damage occurs after this appraisal, we will conduct an additional appraisal. These appraisals, and any acceptable records provided by you, will be used to determine your production to count. Failure to give timely notice that production will be harvested for direct marketing will result in an appraised amount of production to count of not less than the production guarantee per acre if such failure results in our inability to make the required appraisal.

* * * * *

■ 18. Amend § 457.153 by:
■ a. In the undesignated introductory paragraph following the section heading, remove the year ''2013'' and add ''2023'' in its place;
■ b. In section 1,
■ i. Remove the definition of ''Direct marketing'';
■ ii. Revise the definition of ''Interplanted'';
■ c. In section 2:
■ i. Revise the section heading; and
■ ii. In paragraph (b) remove the words ''as specified in the Special Provisions'';
■ d. In section 3:
■ i. Revise the section heading;
■ ii. Revise paragraph (b);
■ iii. In paragraph (c)(3), remove the words ''of trees'' and add ''of the trees'' in their place; and
■ iv. In paragraph (d)(3) remove ''12(c)(1)(ii)'' and add ''12(c)(1)(ii))'' in its place;
■ e. Revise the section 6 header;
■ f. In section 7:
■ i. In paragraph (d), add the word ''and'' at the end;
■ ii. Revise paragraph (e);
■ iii. Remove paragraph (f); and
■ g. In section 11, revise paragraph (b)(2).

The revisions read as follows:

§ 457.153 Peach Crop Insurance Provisions.

* * * * *

1. Definitions

* * * * *

Interplanted. In lieu of the definition contained in section 1 of the Basic Provisions, acreage on which two or more crops are planted in any form of alternating or mixed pattern.

* * * * *

2. Unit Division

* * * * *

3. Insurance Guarantees, Coverage Levels, and Prices

* * * * *

(b) You may select only one price election for all the peaches in the county insured under this policy unless the actuarial documents provide different price elections by fresh and processing peaches. If the actuarial documents provide different price elections, you may select a separate price election for all your fresh peaches and for all your processing peaches. If the actuarial documents do not provide different price elections, the price elections you choose for fresh peaches and processing peaches must have the same percentage relationship to the maximum price offered by us for fresh and processing peaches. For example, if you choose 100 percent of the maximum price election for fresh peaches, you must choose 100 percent of the maximum price election for processing peaches.

* * * * *

6. Report of Acreage

* * * * *

7. Insured Crop

* * * * *

(e) That are grown on trees that have reached at least the fourth leaf year, unless otherwise allowed by the Special Provisions.

* * * * *

11. Duties in the Event of Damage or Loss

* * * * *

(b) * * *

(2) If any portion of your crop will be direct marketed, you must notify us at least 15 calendar days before any production will be harvested, unless you have records verifying that the direct market peaches were ''weighed and graded'' through a packing shed. Failure to give timely notice that production will be harvested for direct marketing will result in an appraised amount of production to count not less than the production guarantee per acre if such failure results in our inability to make the required appraisal.

* * * * *

■ 19. Amend § 457.159 by:
■ a. In the undesignated introductory paragraph following the section heading, remove the year ''2011'' and add ''2023'' in its place;
■ b. In section 1:
■ i. Remove the definition of ''Direct marketing''; and
■ ii. Revise the definition of ''Interplanted'';
■ c. In section 2, remove the word ''serial'';
■ d. In section 3:
■ i. Revise the section heading; and
■ ii. Add paragraph (d);
■ e. Revise the section 5 heading;
■ f. In section 6, revise paragraphs (b)(5) and (6);
■ g. In section 10, revise paragraph (b); and
■ h. In section 11, revise Scenario 1 and Scenario 2.

The revisions read as follows:

§ 457.159 Stonefruit crop insurance provisions.

* * * * *

1. Definitions

* * * * *

Interplanted. In lieu of the definition contained in section 1 of the Basic Provisions, acreage on which two or more crops are planted in any form of alternating or mixed pattern.

* * * * *

3. Insurance Guarantees, Coverage Levels, and Prices

* * * * *

(d) You may not increase your elected or assigned coverage level or the ratio of your price election to the maximum price election we offer if a cause of loss that could or would reduce the yield of the insured crop is evident prior to the time that you request the increase.

* * * * *

5. Cancellation and Termination Dates

* * * * *

6. Insured Crop

* * * * *

(b) * * *

(5) Have produced at least 200 lugs of fresh market production per acre, or at least 2.2 tons per acre for processing crops, in at least one of the four most recent actual production history crop years, unless otherwise allowed by the Special Provisions;

(6) Have reached at least the fifth leaf year, including the fifth leaf year after grafting if grafting occurs after set out, unless otherwise allowed by the Special Provisions; and

* * * * *

10. Duties in the Event of Damage or Loss

* * * * *

(b) If any portion of your crop will be direct marketed, you must notify us at least 15 calendar days before any production will be harvested. We will conduct an appraisal that will be used to determine your production to count for production that is sold by direct marketing. If damage occurs after this appraisal, we will conduct an additional appraisal. These appraisals, and any acceptable records provided by you, will be used to determine your production to count. Failure to give timely notice that production will be harvested for direct marketing will result in an appraised amount of production to count of not less than the production guarantee per acre if such failure results in our inability to make the required appraisal.

* * * * *

11. Settlement of Claim

* * * * *

Scenario 1:

You select 75 percent coverage level and 100 percent of the price election on 50.0 acres of Type A stonefruit with 100 percent share in the unit. The approved yield is 500.0 lugs per acre and the price election is $6.00 per lug. You harvest 5,000 lugs. Your indemnity would be calculated as follows:

(1) 50.0 acres × 500.0 lugs × 0.75 = 18,750-lug production guarantee;

(2) 18,750 lugs × $6.00 price election × 100 percent of the price election = $112,500 value of production guarantee;

(4) 5,000 harvested lugs × $6.00 price election × 100 percent of the price election = $30,000 value of production to count;

(6) $112,500 − $30,000 = $82,500 loss; and

(7) $82,500 × 1.000 share = $82,500 indemnity payment.

Scenario 2:

In addition to the above information in Scenario 1, you have an additional 50.0 acres of Type B stonefruit with 100 percent share in the unit. The approved yield is 300.0 lugs per acre and the price election is $4.00 per lug. You harvest 3,000 lugs. Your indemnity would be calculated as follows:

(1) 50.0 acres × 500.0 lugs × 0.75 Type A = 18,750-lug guarantee; and 50.0 acres × 300.0 lugs × 0.75 Type B = 11,250-lug guarantee;

(2) 18,750 lugs × $6.00 price election × 100 percent of the price election = $112,500 value of guarantee for Type A; and 11,250 lugs × $4.00 price election × 100 percent of the price election = $45,000 value of guarantee for Type B;

(3) $112,500 + $45,000 = $157,500 total value of production guarantee;

(4) 5,000 harvested lugs Type A × $6.00 price election × 100 percent of the price election = $30,000 value of production to count; and 3,000 harvested lugs Type B × $4.00 price election × 100 percent of the price election = $12,000 value of production to count;

(5) $30,000 + $12,000 = $42,000 total value of production to count;

(6) $157,500 − $42,000 = $115,500 total loss; and

(7) $115,500 loss × 1.000 share = $115,500 indemnity payment.

* * * * *

■ 20. Amend § 457.166 by:

■ a. In the undesignated introductory paragraph after the section heading, remove the year ''2005'' and add ''2023'' in its place and remove the sentence ''If a conflict exists among the policy provisions, the order of priority is as follows: (1) The Catastrophic Risk Protection Endorsement, if applicable; (2) the Special Provisions; (3) these Crop Provisions; and (4) the Basic Provisions with (1) controlling (2), etc.'';

■ b. In section 1, remove the definition of ''Direct marketing'';

■ c. Revise the section 3 heading;

■ d. In section 6, in paragraph (a)(2)(i), remove the word ''became'' and add ''become'' in its place;

■ e. In section 9, revise paragraph (a)(3); and

■ f. In section 10, in paragraph (b), revise the Example.

The revisions read as follows:

§ 457.166 Blueberry crop insurance provisions.

* * * * *

3. Insurance Guarantees, Coverage Levels, and Prices

* * * * *

9. Duties in the Event of Damage or Loss

* * * * *

(a) * * *

(3) At least 15 calendar days before any production will be harvested if any portion of your crop will be direct marketed. We will conduct an appraisal that will be used to determine your production to count sold by direct marketing. If damage occurs after this appraisal, we will conduct an additional appraisal. These appraisals and acceptable records provided by you will be used to determine your production to count. Failure to give timely notice that production will be harvested for direct marketing will result in an appraised amount of production to count that is not less than the production guarantee per acre if such failure results in our inability to make the required appraisal.

* * * * *

10. Settlement of Claim

* * * * *

(b) * * *

Example for Section 10(b)

You have 100 percent share in 25 acres of highbush blueberries with a production guarantee of 4,000 pounds per acre and a price election of $.90 per pound. You are only able to harvest 62,500 total pounds because adverse weather reduced the yield. Your indemnity would be calculated as follows:

A. 25 acres × 4,000 pound production guarantee/acre = 100,000 pound total production guarantee;

B. 100,000 pounds × $.90 price election = $90,000 guarantee;

C. One type only, so same as (2) above, $90,000;

D. 62,500 pounds production to count × $.90 price election = $56,250 value of production to count;

E. One type only, so same as (4) above, $56,250;

F. $90,000 − $56,250 = $33,750 loss; and

G. $33,750 × 100 percent share = $33,750 indemnity payment.

End of Example.

* * * * *

■ 21. Amend § 457.167 by:

■ a. In the undesignated introductory paragraph following the section heading, remove the year ''2014'' and add ''2023'' in its place;

■ b. In section 1:

■ i. Revise the definition of ''Direct marketing''; and

■ ii. Revise the definition of ''Interplanted'';

■ c. Revise the section 2 heading;

■ d. Revise the section 3 heading;

■ e. In section 8:

■ i. In paragraph (d), remove the words ''we inspect and allow insurance'' and add ''otherwise allowed'' in their place;

■ ii. In paragraph (f), remove the words ''allowed by written agreement'' and add ''otherwise allowed by the Special Provisions'' in their place; and

■ iii. In paragraph (g), add ''otherwise'' after the word ''unless'';

■ f. In section 10, revise the paragraph (a)(1);

■ g. In section 12(b), remove the words ''will be sold by'' and add ''will be harvested for'' in their place each time they occur; and

■ h. In section 16, remove the words ''Not withstanding'' and add ''Notwithstanding'' in its place.

The revisions read as follows:

§ 457.167 Pecan revenue crop insurance provisions.

* * * * *

1. Definitions

* * * * *

Direct marketing. In addition to the definition contained in section 1 of the Basic Provisions, the sale of the insured crop directly to consumers without the intervention of an intermediary including a sheller. An additional example of direct marketing includes shelling and packing your own pecans.

* * * * *

Interplanted. In lieu of the definition contained in section 1 of the Basic Provisions, acreage on which two or more crops are planted in any form of alternating or mixed pattern.

* * * * *

2. Unit Division

* * * * *

3. Insurance Guarantees and Coverage Levels

* * * * *

10. Insurance Period

(a) * * *

(1) Coverage begins on February 1 of each crop year. However, for the year of application, we will inspect all pecan acreage and will notify you if your application was accepted or not accepted, no later than 30 days after the sales closing date. If we fail to notify you by that date, your application will be accepted unless other grounds exist to not accept the application, as specified in section 2 of the Basic Provisions. You must provide any information that we require for the crop or to determine the condition of the orchard.

* * * * *

■ 22. Amend § 457.171 by:

■ a. Revise the undesignated introductory paragraph following the section heading;

■ b. In section 1, remove the definition of ''Direct marketing'';

■ c. In section 3:

■ i. Revise the section heading; and

■ ii. In paragraph (a), remove the words ''Special Provisions'' and add ''actuarial documents'' in their place each time they appear;

■ d. In section 4:

■ i. Revise paragraph (a);

■ ii. Revise paragraph (b); and

■ iii. In paragraph (c), remove the words ''Special Provisions'' and add ''actuarial documents'' in their place;

■ e. In section 5 revise the table;

■ f. In section 9:

■ i. In paragraph (b)(2)(iii) remove the words ''Brooks, Colquitt, Tift, Toombs Counties,''

■ ii. Revise paragraphs (b)(2)(iv) and (v);

■ iii. Revise paragraph (b)(2)(vii);

■ iv. Add the word ''and'' after the semi-colon in paragraph (b)(2)(ix)(A);

■ v. Remove paragraph (b)(2)(ix)(B);

■ vi. Redesignate paragraph (b)(2)(ix)(C) as paragraph (b)(2)(ix)(B); and

■ g. Revise the section 12 heading.

The revisions read as follows:

§ 457.171 Cabbage Crop Insurance Provisions.

The Cabbage Crop Insurance Provisions for the 2023 and succeeding crop years in counties with a contract change date of November 30, and for the 2024 and succeeding crop years in counties with a contract change date of April 30, are as follows:

FCIC policies: United States Department of Agriculture, Federal Crop Insurance Corporation.

Reinsured policies: (Appropriate title for insurance provider).

Both FCIC and reinsured policies: Cabbage Crop Insurance Provisions.

* * * * *

3. Insurance Guarantees, Coverage Levels, and Prices

* * * * *

4. Contract Changes

* * * * *

(a) April 30 in Florida; Georgia; and Texas;

(b) November 30 in Alaska; Michigan; New Jersey, New York; North Carolina; Ohio; Oregon; Pennsylvania; Virginia; Washington; and Wisconsin; or

* * * * *

5. Cancellation and Termination Dates

* * * * *

State and counties	Cancellation and termination dates
Georgia, Texas	July 1.
Florida	August 15.
Oregon, Washington	February 1.
North Carolina	February 28.
Alaska, Michigan, New Jersey, New York, Ohio, Pennsylvania, Virginia, and Wisconsin.	March 15.
All other states and counties	As designated in the Special Provisions.

* * * * *

9. Insurance Period

* * * * *

(b) * * *

(2) * * *

(iv) Michigan, New Jersey, and Ohio:

(A) September 30 for the spring planting period; and

(B) November 25 for the summer planting period;

(v) New York and Pennsylvania: November 25;

* * * * *

(vii) Oregon:

(A) March 1 for all fall Red (Fresh) and Green (Fresh) types; and

(B) December 31 for all other types and planting periods;

* * * * *

12. Duties in the Event of Damage or Loss

* * * * *

■ 23. Amend § 457.173 by:

■ a. In the undesignated introductory paragraph following the section heading, remove the year ''2011'' and add ''2023'' in its place;

■ b. In section 1:

■ i. Remove the definition of ''Direct marketing''; and

■ ii. In the definition of ''Type'', remove the words ''Either early varieties or'' and add ''Early varieties, mid varieties, or'' in their place;

■ c. In section 2, remove the word ''serial'';

■ d. In section 3:

■ i. Revise the section heading;

■ ii. In paragraph (a)(3)(i), remove the words ''varieties of'' and add ''varieties and mid varieties of'' in their place; and

■ iii. In paragraph (b), remove the words ''Special Provisions'' and add ''actuarial documents'' in their place each time they appear;

■ e. In section 6, paragraph (b)(1), remove the words ''growing season after set out'' and add ''leaf year'' in their place; and

■ f. In section 10:

■ i. Revise paragraph (a) introductory text; and

■ ii. In paragraph (a)(2), remove the words ''sold by'' and add ''harvested for'' in their place.

The revisions read as follows:

§ 457.173 Florida Avocado crop insurance provisions.

* * * * *

3. Insurance Guarantees, Coverage Levels, and Prices.

* * * * *

10. Duties in the Event of Damage or Loss.

In addition to the requirements of section 14 of the Basic Provisions, the following will apply:

(a) If any portion of your crop will be direct marketed, you must notify us at least 15 calendar days before any production will be harvested.

* * * * *

■ 24. Amend § 457.175 by:

■ a. In the undesignated introductory paragraph, remove the year ''2020'' and add ''2024'' in its place;

■ b. In section 1:

■ i. Remove the definition of ''Direct marketing''; and

■ ii. Revise the definition of ''Interplanted'';

■ c. Revise the section 3 heading;

■ d. In section 6, in paragraph (b), remove the words ''growing season after set out'' and add ''leaf year'' in their place;

■ e. In section 10, paragraph (a), revise the first sentence; and

■ f. In section 11, paragraph(b)(3), remove ''11(c)'' and add ''11(c))'' in its place.

The revisions read as follows:

§ 457.175 California avocado crop insurance provisions.

* * * * *

1. Definitions

* * * * *

Interplanted. In lieu of the definition contained in section 1 of the Basic Provisions, acreage in which two or more crops are planted in any form of an alternating or mixed pattern.

* * * * *

3. Insurance Guarantees, Coverage Levels, and Prices

* * * * *

10. Duties in the Event of Damage or Loss

* * * * *

(a) If any portion of your crop will be direct marketed, you must notify us at least 15 calendar days before any production will be harvested. * * *

* * * * *

Marcia Bunger,

Manager, Federal Crop Insurance Corporation.

[FR Doc. 2022–13411 Filed 6–29–22; 8:45 am]

BILLING CODE 3410–08–P

SMALL BUSINESS ADMINISTRATION

13 CFR Parts 120 and 123

RIN 3245–AG98

Regulatory Reform Initiative: Streamlining and Modernizing the 7(a), Microloan, and 504 Loan Programs To Reduce Unnecessary Regulatory Burden

AGENCY: U.S. Small Business Administration.

ACTION: Final rule.

SUMMARY: This final rule removes or revises various regulations governing the agency's business loan programs that are obsolete, unnecessary, ineffective, or burdensome. This final rule also makes several technical amendments to incorporate recent statutory changes and other non-substantive changes. In addition, because this final rule removes a regulation that is cross-referenced in a regulation in SBA's Disaster Loan Program, this rule makes one conforming change to the regulation in the Disaster Loan Program.

DATES: The effective date of this final rule will be August 1, 2022.

FOR FURTHER INFORMATION CONTACT: Linda Reilly, Chief, 504 Loan Program Division, Office of Financial Assistance, U.S. Small Business Administration, 409 Third Street SW, Washington, DC 20416; phone: (202) 604–5032; email address: *linda.reilly@sba.gov.* The phone number above may also be reached by individuals who are deaf or hard of hearing, or who have speech disabilities, through the Federal Communications Commission's TTY-Based Telecommunications Relay Service teletype service at 711.

SUPPLEMENTARY INFORMATION:

A. General Information

As part of its ongoing responsibility to ensure that the rules it issues do not have an adverse economic impact on those affected by those rules, the U.S. Small Business Administration (SBA) published a proposed rule in the **Federal Register** on December 14, 2020 (85 FR 80676) to remove or revise various regulations in part 120 of title 13 of the Code of Federal Regulations that are obsolete, unnecessary, ineffective, or burdensome. The rule also proposed to make several technical amendments to regulations in part 120 to incorporate recent statutory changes and other non-substantive changes. In addition, because the rule proposed to remove a regulation that is cross-referenced in a regulation in part 123 on SBA's Disaster Loan Program, the rule proposed to make one conforming change to that regulation. The comment period was open until February 12, 2021.

In response to the request for comments, SBA received 2,901 comments of which 234 were duplicative. Of the unique 2,667 comments received, 1 was from a national trade association, 4 were from government entities, 14 were from advocacy groups, 5 were from private industries, and 2,643 were from individuals. Over 99% of the comments received, 2,651, were in response to the proposed removal of 120.110(k) from the regulations. This provision currently provides that businesses principally engaged in teaching, instructing, counseling or indoctrinating religion or religious beliefs are ineligible for SBA financial assistance; all but one of the comments received expressed opposition to its removal. The comments received on this issue and the other comments received are summarized and addressed below in the section-by-section analysis.

F. Section-by-Section Analysis

Section 120.2. SBA proposed to remove paragraphs (a)(1)(i) and (ii) of this section because SBA has not received funding to make direct or immediate participation 7(a) loans for over 30 years, explaining that it may be confusing to the public to refer to such loans when they are not available from the agency. No comments were received on this proposed change. However, SBA has decided not to move forward with the removal of these provisions at this time in order to retain the option for these programs should budget authority for direct lending or immediate participation programs become available.

Section 120.10. SBA proposed to remove the references to non-lending technical assistance providers (NTAPs) in the definition of ''Risk Rating'' because SBA has not issued grant funds to NTAPs for many years. No comments were received on this proposed change and SBA is adopting the change as proposed.

Section 120.103. SBA proposed to remove this section on farm enterprises, which refers to an outdated Memorandum of Understanding between SBA and the United States Department of Agriculture (USDA), because it is unnecessary. Although Federal financial assistance to agricultural businesses is generally available from USDA, SBA is also statutorily authorized to make non-disaster business loans to agricultural

enterprises under sections 3(a)(1) and 7(a) of the Small Business Act and Title V of the Small Business Investment Act. SBA received one supporting comment from a trade association and no opposing comments. SBA is adopting the change as proposed.

Section 120.110. This section lists the types of businesses that are ineligible for SBA business loans. For clarity, SBA proposed to make changes to three of the types of businesses on the list. First, SBA proposed to amend paragraph (h), which currently provides that businesses ''engaged in any illegal activity'' are ineligible, by revising it to provide that the business is ineligible if it is ''engaged in any activity that is illegal under Federal, State, or local law''. SBA wants to make it clear, consistent with its longstanding interpretation of this regulation, that the business is ineligible if it is engaged in any activity that is illegal at any level of government in the jurisdiction in which the business is operating. SBA received one supporting comment from a trade association and no opposing comments SBA is adopting this change as proposed.

Second, SBA proposed to remove and reserve paragraph (k), which currently provides that a business is ineligible if it is ''principally engaged in teaching, instructing, counseling or indoctrinating religion or religious beliefs, whether in a religious or secular setting''. SBA explained that this provision, which was promulgated in 1996, could be interpreted as impermissibly imposing a special disability on organizations based on their religious status. In both *Trinity Lutheran Church of Columbia, Inc.* v. *Comer,*____ U.S.____, 137 S. Ct. 2012, 198 L. Ed. 2d 551 (2017), and *Espinoza* v. *Montana Department of Revenue,* ____U.S.____, 140 S. Ct. 2246, 207 L. Ed. 2d 679 (2020), the Court held that the government may not deny a public benefit to an entity solely because of its religious status, character, or identity. Accordingly, SBA proposed to remove paragraph (k) from section 120.110. Over 99% of the total number of comments submitted, or 2,651, related to the proposed removal of section 120.110(k), and all but one of these comments (as discussed below) expressed opposition to the removal of this provision. The vast majority of the commenters stated that they oppose SBA providing Federal government assistance to religious institutions or for religious purposes and stated that providing such assistance violates the First Amendment and its Establishment Clause and the First Amendment principle of separation of church and state. They also expressed opposition to using taxpayer funds to support religious institutions that already receive the benefit of tax-exempt status. Other commenters stated that they did not want their taxes to support faiths that promote bigotry or expressed concern that the religious institution may misappropriate or misuse the funds provided with government assistance.

As mentioned above, one commenter, a trade association, did not object to the removal of paragraph (k) but suggested also amending 13 CFR 120.130 ''to add funding religious activities as an ineligible use of loan proceeds.'' The commenter expressed their view that this addition to the regulations would be consistent with the guidance that SBA currently provides in its Standard Operating Procedure (SOP) 50 10 6 that ''[i]f it appears that the proceeds of a loan sought by an Applicant may be used to fund religious activities, the SBA Lender must complete SBA Form 1971, Religious Eligibility Worksheet.''

It therefore seems clear that the overriding concern of the commenters was the continued adherence of SBA's business loan programs to the demands of the Establishment Clause of the First Amendment. SBA believes that the language of section 120.110(k) could be viewed as being at odds with *Trinity Lutheran* and *Espinoza.* But, as stated in the preamble to the proposed rule, SBA will apply relevant case law to assure that the intended use of the loan proceeds of SBA business loans is consistent with the First Amendment's Establishment Clause.

Accordingly, SBA has determined that: (1) paragraph (k) of section 120.110 should be removed from the Agency's regulations, and reserved; (2) the Agency will continue to ensure that the proceeds of SBA business loans are used in a manner consistent with the requirements of the First Amendment of the U.S. Constitution; and (3) to assist SBA in applying applicable case law, the guidance provided in the Agency's SOP 50 10 6, at page 146, regarding the submission of SBA Form 1971, will remain in effect until further notice. If needed and appropriate, SBA may subsequently propose additional regulatory language addressing relevant constitutional requirements.

Third, SBA proposed to revise paragraph (n), which currently provides that a business is ineligible if an Associate ''is incarcerated, on probation, on parole, or has been indicted for a felony or a crime of moral turpitude''. With respect to ineligibility based on indictment for a crime, SBA proposed to change the phrase to ''is under indictment'' from ''has been indicted''. SBA explained that it wants to make clear, consistent with its longstanding interpretation of this regulation, that the business is not ineligible if an Associate has a history of ever being indicted (but not convicted), but would be ineligible only if an Associate is under indictment when the business submits a loan application or prior to loan approval. In addition, SBA proposed to replace the phrase, ''a crime of moral turpitude'', which is not always easily defined and can vary by State, with ''a crime involving or related to financial misconduct or a false statement''. SBA explained that it believes that the proposed standard is clearer and more relevant to SBA's responsibility to carry out the business loan programs in a financially prudent manner. SBA received one supporting comment from a trade association and no opposing comments. SBA is adopting the changes as proposed.

Section 120.111. SBA proposed to revise this section by removing a duplicative sentence at the end of the introductory text. No comments were received on this proposed change and SBA is adopting it as proposed.

Section 120.120. This section describes the eligible uses of loan proceeds. SBA proposed to revise paragraph (a)(1), which currently provides that a Borrower may use loan proceeds to ''acquire land (by purchase or lease)'', to add that the land must be ''actively used in the applicant's business operations (except that a Borrower may lease a portion of the property in accordance with 13 CFR 120.131 and 120.870(b))''. SBA explained that this change reflects SBA's prohibition against financing passive activities other than Eligible Passive Companies under 13 CFR 120.111. SBA received one supporting comment from a trade association and no opposing comments. However, SBA has decided that more time is needed to review and study ''use of proceeds'' and is not moving forward with this revision at this time.

Section 120.173. SBA proposed to remove this section, which prohibits the use of lead-based paint if loan proceeds are for the construction or rehabilitation of a residential structure. SBA explained that this regulation is unnecessary because 16 CFR part 1303 already bans paint containing a concentration of lead in excess of 0.009% (90 parts per million) for use in residences, schools, hospitals, parks, playgrounds, and public buildings or other areas where consumers will have direct access to the painted surface. No comments were received on this proposed change and SBA is adopting it as proposed.

Section 120.190. SBA proposed to remove the reference to immediate participation loans in paragraph (a) and to remove paragraph (d), which refers to direct loans, because SBA has not received funding for immediate participation or direct loans for over 30 years and believes that it may be confusing to the public to refer to such loans when they are not available from the agency. No comments were received on these proposed changes. However, SBA has decided not to move forward with the removal of these provisions at this time in order to retain the option for these programs should budget authority for direct lending or immediate participation programs become available.

Section 120.192. SBA proposed to remove this section which states that loan applicants will receive notice of approval or denial of the loan application by the Lender, Certified Development Company (CDC), Microloan Intermediary, or SBA, as appropriate. SBA explained that it was SBA's responsibility to provide notice to the applicant only when it made direct loans, and that because SBA has not received funding for direct loans for over 30 years, it is no longer necessary to include the reference to SBA in this section. No comments were received on this proposed change. However, SBA has decided not to move forward with the removal of these provisions at this time in order to retain the option for these programs should budget authority for direct lending or immediate participation programs become available.

Section 120.211. SBA proposed to remove this section, which describes the statutory limits for direct loans and immediate participation loans, because SBA has not received funding to make these loans for over 30 years. SBA explained that it believes that it may be confusing to the public to refer to such loans when they are not available from the agency. No comments were received on this proposed change. However, SBA has decided not to move forward with the removal of this section at this time in order to retain the option for these programs should budget authority for direct lending or immediate participation programs become available.

Section 120.212. SBA proposed to amend this section which establishes the maturities for a 7(a) loan. Paragraph (b) of this section establishes the loan term at ten years or less unless the loan finances or refinances real estate or equipment with a useful life exceeding ten years. When the loan is used to finance equipment or leasehold improvements, SBA proposed to amend paragraph (b) to allow a Lender to add a reasonable period, not to exceed 12 months, to the loan term when necessary to complete the installation of the equipment and/or complete the leasehold improvements. SBA received one supporting comment from a trade association and no opposing comments. SBA is adopting this change as proposed.

Section 120.213. SBA proposed to remove paragraph (b), which describes the interest rate charged by SBA for direct loans, for which SBA has not received funding for over 30 years. SBA explained that it may be confusing to the public to refer to such loans when they are not available from the agency. The remainder of the section would have also been revised accordingly. No comments were received on this proposed change. However, SBA has decided not to move forward with the removal of this provision at this time in order to retain the option for this program should budget authority for direct lending become available.

Sections 120.214. SBA proposed to amend paragraph (c) of section 120.214 by removing the thirty-day London Interbank Offered Rate (LIBOR) as a base rate option for calculating the maximum variable interest rate for a 7(a) loan in paragraph (c)(ii). SBA explained that the U.K. Financial Conduct Authority announced on July 27, 2017, that it would phase-out LIBOR completely by the end of 2021 (since revised to June 30, 2023), and no generally accepted replacement for LIBOR has been identified or widely adopted at this time. To provide certainty to SBA Lenders and Borrowers in advance of LIBOR's sunset in 2023, SBA proposed to remove from the regulation the reference to LIBOR as an optional base rate for variable rate 7(a) loans.

Until such time as an alternative reference rate becomes widely adopted for small business commercial lending, Lenders will only be able to use Prime or the Optional Peg Rate as the base rate for any loan approved after the effective date of this final rule. In addition, for any loans outstanding with interest rates based on LIBOR, SBA recommends that Lenders review their loan documents to determine if the documents provide a fallback base rate (*i.e.,* Prime or the Optional Peg Rate) without having to modify the loan documents. If there is no such flexibility, Lenders will need to work with Borrowers to modify their loan documents on an individual basis before LIBOR sunsets in 2023. Such modifications must be in compliance with the procedures set forth in the current versions of SBA SOPs 50 10 and 50 57. If such loans have been sold on the secondary market, Lenders will need to obtain the consent of investors to modify the base rate in the loan agreement. With only 3% of SBA's total portfolio of non-disaster business loans using LIBOR as a base rate, the process of phasing out LIBOR should not have a significant economic impact on a substantial number of small entities in SBA's business loan programs.

SBA received one comment from a trade association expressing support for the deletion of LIBOR as an optional base rate since it is being phased out by June 30, 2023, and SBA is adopting this change as proposed with the addition of a sentence that provides that, if an alternative reference rate subsequently becomes widely adopted for small business commercial lending, SBA will provide notice of this rate as an additional base rate option through publication in the **Federal Register**.

In addition, SBA proposed to use loan amounts as the basis upon which the variable interest rate is set, instead of loan maturities. To implement this change, SBA proposed to remove paragraph (e) and revise paragraph (d) to reflect the maximum variable interest rates for all 7(a) loans as follows:

(1) For all 7(a) loans of $50,000 and less, the maximum interest rate shall not exceed six and a half (6.5) percentage points over the base rate;

(2) For all 7(a) loans greater than $50,000 and up to and including $250,000, the maximum interest rate shall not exceed six (6.0) percentage points over the base rate;

(3) For all 7(a) loans greater than $250,000 and up to and including $350,000, the maximum interest rate shall not exceed four and a half (4.5) percentage points over the base rate; and

(4) For all 7(a) loans greater than $350,000, the maximum interest rate shall not exceed three (3.0) percentage points over the base rate.

By basing the rates on loan amounts and allowing Lenders to charge higher rates for smaller loans, Lenders would have more incentive to make smaller loans to businesses in need of credit on reasonable terms. In addition, the maximum variable interest rates described above would apply to all types of 7(a) loans. Currently, the maximum variable interest rate that Lenders are permitted to charge may vary depending upon the type of 7(a) loan the Lender is making, *i.e.,* SBA Express, Export Express, Community Advantage Pilot, or regular 7(a). By standardizing the maximum variable interest rates for all 7(a) loans, SBA is streamlining and simplifying its regulations, and reducing the burden on

Lenders. Upon the effective date of this rule, SBA Express and Export Express Lenders may continue to use, in accordance with the statutory authority of section 7(a)(31) and 7(a)(34) of the Small Business Act, respectively, the same base rates they use on their similarlysized, non-SBA guaranteed commercial loans, as well as their established change intervals, payment accruals, and other interest rate terms. However, the interest rate must never exceed the maximum allowable interest rate stated in paragraph (d) of this section and these loans may be sold on the Secondary Market only if the base rate is one of the base rates allowed in § 120.214(c). In addition, under this final rule, Community Advantage Lenders are allowed to charge the higher interest rate in paragraph (1) above for loans of $50,000 or less (such Lenders can already charge 6 percentage points over the Prime rate for loans up to $250,000, the maximum loan amount under the Community Advantage Pilot).

Two other changes that SBA proposed to this section include removing the requirement in the introductory paragraph of § 120.214 that SBA's approval is required for a Lender to use a variable rate of interest and amending the second sentence of the introductory paragraph of § 120.214 by moving it to § 120.214(d) and revising it to clearly state that the initial maximum variable interest rate is determined as of the date that SBA received the loan application.

SBA received two comments with respect to these changes, including one from a trade association, which expressed support for the changes, and one from an individual, who expressed support for the new interest rates. The commenters agreed that providing a higher interest rate on smaller loans is a great incentive for lenders to provide such loans to borrowers.

SBA is adopting these changes as proposed.

Section 120.215. SBA proposed to remove this section, which establishes the interest rates for smaller loans. The interest rates for all 7(a) loans will now be covered by § 120.213 and the proposed amendments to § 120.214. SBA received one supporting comment from a trade association and no opposing comments; the Agency is removing this section as proposed.

Section 120.220. SBA proposed to revise this section with two changes. First, paragraph (a)(3) currently states that ''[i]n fiscal years when the 7(a) program is at zero subsidy, SBA will not collect a guarantee fee in connection with a loan made under section 7(a)(31) of the Small Business Act to a business owned and controlled by a veteran or the spouse of a veteran.'' This regulatory paragraph implements section 7(a)(31)(G) of the Small Business Act, which provides that the guarantee fee imposed by section 7(a)(18) of the Small Business Act is waived in connection with a loan made under the SBA Express Loan Program to a veteran or the spouse of a veteran except in any fiscal year in which the 7(a) program is not operating at zero subsidy. However, section 1102(d) of the Coronavirus Aid, Relief, and Economic Security Act (Pub. L. 116–136, 134 Stat. 281) removed the exception and, accordingly, SBA proposed to remove it from section 120.220(a)(3). SBA received one comment in support of this change and is adopting this change as proposed.

Second, paragraph (b) of this regulation establishes the deadlines for paying the SBA guaranty fee. For a loan with a maturity in excess of 12 months, this provision has historically required the Lender to pay the fee electronically within 90 days after SBA approval of the loan. In practice, SBA has been giving Lenders an additional 30 days to pay this fee, for a total of 120 calendar days after SBA loan approval, before cancelling the guarantee. With the efficiencies that have been created by electronic banking, SBA believes that these payments should be made in less time than 120 days and proposed to require that the fee be paid within 45 days after loan approval. If the fee is not paid by the 45th day, SBA proposed to give the Lender a grace period of an additional 30 days and if the fee is not paid by the 75th day, SBA would cancel the guarantee. For loans with a maturity of 12 months or less, SBA proposed to continue to cancel the guarantee if the fee is not paid by the 10th business day after the Lender receives SBA loan approval. SBA received two comments opposing this change, one from a trade association and one from a member of the general public. Both commenters objected to shortening the time frame for paying the guaranty fee on 7(a) loans with a maturity date of more than one year from 90 days to 45. The trade association reasons that SBA has historically not terminated its guaranty unless the fee remained unpaid on the 121st day after loan approval. In addition, both commenters note that the period between loan approval and loan disbursement may be longer than 45 days. Since the guaranty fee may not be paid until after the borrower's first disbursement, the trade association argues that maintaining the timeframe at 90 days would avoid stressing lender liquidity.

After considering these comments, SBA has decided to conduct further study on the timing of guarantee fee payment by lenders and is not adopting this change at this time.

Section 120.222. SBA proposed to revise this section with a minor technical correction to § 120.222 to remove an extra word (''in'') that was inserted in error. No comments were received on this proposed change and SBA is adopting it as proposed.

Section 120.310. SBA proposed to remove the reference to direct loans in this provision, which governs the Disabled Assistance Loan Program (''DAL''), to make this regulation consistent with section 7(a)(10) of the Small Business Act, which authorizes ''guaranteed'' loans under the DAL program, but not direct loans. No comments were received on this proposed change. However, SBA has decided not to move forward with the removal of the reference to direct loans in this provision at this time in order to retain the option for this program should budget authority for direct lending become available.

Section 120.315. SBA proposed to remove this section in its entirety, which establishes the interest rate and limit on the loan amount with respect to direct DAL loans, to make this regulation consistent with section 7(a)(10) of the Small Business Act, which authorizes guaranteed loans only and not direct loans. No comments were received on this proposed change. However, SBA has decided not to move forward with the removal of this section at this time in order to retain the option for direct lending should budget authority become available.

Section 120.320. SBA proposed to remove this provision in its entirety. It references SBA's authority under section 7(a)(11) of the Small Business Act to guarantee or make direct loans to businesses owned by low income individuals. SBA explained that direct loans have not been funded for over 30 years and that this provision did not add anything to the general authority that SBA has under section 7(a) of the Small Business Act to make guaranteed loans to businesses owned by low-income individuals. No comments were received on this proposed change. However, SBA has decided not to move forward with the removal of this section at this time in order to retain the option for direct lending should budget authority become available.

Section 120.330. SBA proposed to remove the reference to direct loans in this section because SBA has not received funding to make these loans for over 30 years. SBA explained that it may be confusing to the public to refer to such loans when they are not

available from the agency. No comments were received on this proposed change. However, SBA has decided not to move forward with the removal of the reference to direct loans in this provision at this time in order to retain the option for direct lending should budget authority become available.

Sections 120.350 and 120.352. The regulations governing SBA guaranteed loans to qualified employee trusts or ''Employee Stock Ownership Plans'' (ESOPs) are set forth in §§ 120.350 through 120.354. SBA proposed to include a technical amendment to both § 120.350 and § 120.352 to incorporate the statutory change made in Section 862 of the John S. McCain National Defense Authorization Act for Fiscal Year 2019 (Pub. L. 115–232) that permits SBA to guarantee a loan to the small business concern (rather than the qualified employee trust), if the proceeds from the loan are used only to make a loan to a qualified employee trust that results in the qualified employee trust owning at least 51 percent of the small business concern. SBA proposed this amendment to ensure that the regulations are consistent with the statute and to provide clarity to SBA Lenders and SBA employees with respect to guaranteed loans involving ESOPs. Additional guidance governing these loans will be provided in SOP 50 10. SBA received one supporting comment from a trade association and no opposing comments. SBA is adopting the amendments as proposed.

Sections 120.360 and 120.361. SBA proposed to remove these sections, which describe an outdated veteran's loan program for direct and guaranteed loans to Vietnam-era veterans and certain disabled veterans. SBA explained that it has not received funding to make direct 7(a) loans in the Veterans Loan Program for over 30 years and SBA's existing Loan Program Requirements provide special consideration for veteran-owned businesses. No comments were received on these proposed changes. However, SBA has decided not to move forward with the removal of these sections at this time in order to retain the option for direct lending should budget authority become available.

Section 120.370. SBA proposed to remove this section, which describes SBA's authority under section 7(a)(12) of the Small Business Act to finance pollution control facilities, because the $1 million cap set forth in section 7(a)(12)(B) for these pollution control loans was superseded when Congress raised the guaranty limit in section 7(a)(3) to $3.75 million. This provision is also unnecessary because SBA is authorized under the general authority of section 7(a) to make guaranteed loans for pollution control facilities. SBA received one supporting comment from a trade association and no opposing comments. SBA is removing this section as proposed.

Section 120.375. SBA proposed to remove this section's reference to direct loans to firms participating in the 8(a) Program because direct loans have not been funded for over 30 years. SBA explained that it may be confusing to the public to refer to such loans when they are not available from the agency. No comments were received on this proposed change. However, SBA has decided not to move forward with the removal of the reference to direct loans at this time in order to retain the option for direct lending should budget authority become available.

Section 120.376. SBA proposed to remove paragraph (a), the second sentence of paragraph (c), and paragraph (d), all of which describe requirements for direct loans or an immediate participation loan related to the loan program for participants in the 8(a) Program, for the same reasons expressed under the discussion of section 120.375 above, with the remaining paragraphs redesignated accordingly. No comments were received on these proposed changes. However, SBA has decided not to move forward with the removal of these provisions at this time in order to retain the option for these programs should budget authority for direct lending or immediate participation programs become available.

Sections 120.380 through 120.383. SBA proposed to remove these sections, which govern the program to provide defense economic transition assistance, because this program is no longer being funded. SBA believes that it may be confusing to the public to refer to such loans when they are not available from the agency. SBA received one supporting comment from a trade association and no opposing comments. SBA is removing these sections as proposed.

Section 120.420. SBA proposed to remove paragraph (b), which defines ''Bank Regulatory Agencies,'' because this term is no longer used in part 120, and the term ''Federal Financial Institution Regulator,'' which is used instead, is defined in 13 CFR 120.10, with the remaining paragraphs redesignated accordingly. SBA received one supporting comment from a trade association and no opposing comments. SBA is adopting this change as proposed.

Section 120.432. SBA proposed to amend § 120.432(a) to implement SBA's longstanding policy of holding Assuming Institutions and investors responsible for the contingent liabilities (including repairs and denials) associated with 7(a) loans originated by failed insured depository institutions, whether the 7(a) loans are purchased by a Lender through a Federal Deposit Insurance Corporation (FDIC) loan sale or transferred to an Assuming Institution through a whole bank transfer. SBA proposed to make this modification to ensure consistent treatment of all portfolio loan transfers whether through voluntary bank mergers or asset sales, or through FDIC-led portfolio transfers following the failure of a Lender. SBA also proposed to modify the regulatory language to include a statement that clarifies the applicability of the paragraph and the ability for the Agency to agree otherwise in writing (*i.e.,* to affirm the validity of the guaranties). In addition, SBA proposed to modify the regulatory language to remove the specific reference to the FDIC and make it applicable to all 7(a) loans purchased from any Federal or state banking regulator, any receiver, or any conservator. SBA received one supporting comment from a trade association and no opposing comments. SBA is adopting these changes as proposed.

Section 120.453. SBA proposed to remove this section, which states that servicing and liquidation responsibilities for PLP Lenders are set forth in subpart E of part 120, as unnecessary. PLP Lenders are required to service and liquidate their loans in accordance with the same standards set forth in subpart E that are applied to non-delegated Lenders. SBA received one supporting comment from a trade association and no opposing comments. SBA is removing this section as proposed.

Section 120.470. SBA proposed to revise paragraph (d)(1) of this provision by increasing the dollar amount that a small business lending company (SBLC) may disburse with the signature of only one bonded officer from $1,000 to $10,000, provided that such action is covered under the SBLC's fidelity bond. SBA believes this change would reduce burden on SBLCs without introducing significant risk to the program. SBA received one supporting comment from a trade association and no opposing comments. SBA is adopting this change as proposed.

Section 120.532. SBA proposed to remove this section, which refers to SBA's authority to assume a Borrower's

obligation under terms and conditions set by SBA (see section 5(e) of the Small Business Act), because SBA does not use this authority and believes it may be confusing to the public for the regulations to refer to the availability of a loan moratorium under this section when it is not available from the agency. SBA received one supporting comment from a trade association and no opposing comments. SBA is adopting this change as proposed.

Section 120.540. Paragraph (g) of this section provides that a Lender may appeal an SBA office's decision pertaining to an original or amended liquidation plan to the Director of the Office of Financial Assistance (D/FA) within 30 days of the decision. The office within SBA that is now responsible for considering these appeals is the Office of Financial Program Operations (OFPO). Accordingly, SBA proposed to amend this paragraph by replacing ''D/FA'' with ''Director/Office of Financial Program Operations (D/OFPO)'' where it first appears and with ''D/OFPO'' thereafter. SBA received one comment supporting this change and no opposing comments.

The commenter also recommended that SBA amend paragraph (b) of this section to delete the requirement of prior SBA approval for the liquidation plan on a loan processed under a 7(a) lender's Certified Lender Program (CLP) authority. The trade association argues that this change is appropriate since SBA discontinued CLP authority years ago. However, section 7(a)(19)(C) of the Small Business Act requires SBA's prior approval of liquidation plans for CLP loans and so long as CLP loans are outstanding, this requirement needs to remain in the regulation.

Section 120.542. Paragraph (d) of this section provides that a Lender may appeal an SBA decision to decline to reimburse all, or a portion, of the fees and/or costs incurred in conducting liquidation to the D/FA, and that the decision of the D/FA (or designee) will be made in consultation with the Associate General Counsel for Litigation. The office within SBA that is now responsible for considering these appeals is OFPO. Accordingly, SBA proposed to amend this paragraph by replacing ''D/FA'' with ''D/OFPO'' wherever it appears.

In addition, paragraph (e) of this section provides that a Lender may appeal a decision by SBA to decline to reimburse all, or a portion, of the legal fees and/or costs incurred in conducting debt collection litigation to the Associate General Counsel for Litigation. It further provides that the Associate General Counsel makes this decision in consultation with the D/FA. The office within SBA that is now responsible for consulting with the Associate General Counsel is OFPO. Accordingly, SBA proposed to amend this paragraph by replacing ''D/FA'' with ''D/OFPO''. SBA received one supporting comment from a trade association on these changes and no opposing comments. SBA is adopting these changes as proposed.

Section 120.701. SBA proposed to remove paragraph (g) of this section, which defines ''Non-lending technical assistance provider'' (NTAP), because SBA has not issued grant funds to NTAPs for many years. SBA also proposed to redesignate the remaining paragraph (h) accordingly. No comments were received on this proposed rule change and SBA is adopting it as proposed.

Section 120.706. SBA proposed to revise paragraph (a) of this section to increase the maximum outstanding amount of loans that an Intermediary may borrow from SBA from $5 million to $6 million. This change incorporates the increase made by section 853(b) of the John S. McCain National Defense Authorization Act for Fiscal Year 2019, 15 U.S.C. 636(m)(3)(C). No comments were received on this proposed rule change and SBA is adopting it as proposed.

Section 120.707. SBA proposed to revise the regulation at § 120.707(b) to increase the maximum maturity of a loan from an Intermediary to a Microloan borrower from 6 years to 7 years, explaining that this change would allow for a longer repayment period for these small loans. No comments were received on this proposed rule change and SBA is adopting it as proposed.

Section 120.712. In § 120.712(b), SBA proposed to incorporate a recent statutory change to the percentage of grant funds that may be used by the Intermediary for marketing, managerial, and technical assistance to prospective Microloan borrowers. In addition, in § 120.712(d), SBA proposed to incorporate a recent statutory change to the percentage of grant funds the Intermediary may use to contract with third parties to provide technical assistance to Microloan borrowers. No comments were received on these proposed rule changes and SBA is adopting them as proposed.

Section 120.714. SBA proposed to remove § 120.714, which describes how grants are made to non-lending technical assistance providers (NTAPs). SBA no longer makes such grants and there are no NTAPs currently participating in the Microloan Program. SBA therefore proposed to eliminate this section to reduce confusion. No comments were received on this proposed rule change and SBA is adopting it as proposed.

Section 120.715. SBA proposed to remove this section, which describes the Deferred Participation Loan Pilot, under which SBA was authorized to guarantee a loan that an Intermediary in the Microloan Program obtained from another source. SBA proposed to remove § 120.715 in its entirety as this pilot expired in Fiscal Year 2000 and SBA no longer has the authority to guarantee such loans. No comments were received on this proposed rule change and SBA is adopting it as proposed.

Section 120.800. SBA proposed to remove this section, which describes the purpose of the 504 program, because it is unnecessary. The 504 Loan Program is described in § 120.2(c). No comments were received on this proposed rule change and SBA is adopting it as proposed.

Section 120.812. SBA proposed to revise paragraph (a)(2) to provide that a newly certified CDC may petition for more than a single one-year extension of probation. In addition, SBA proposed to revise paragraph (d) to clarify that, if SBA declines the CDC's petition for permanent status, the CDC will no longer have authority to participate in the 504 Loan Program and SBA will direct the CDC to transfer all funded and/or approved loans to another CDC, SBA, or another servicer approved by SBA. No comments were received on these changes and SBA is adopting them as proposed.

Section 120.840. SBA proposed to make a technical correction to § 120.840(b) by replacing the reference in this section to the Director, Office of Financial Assistance with ''appropriate SBA official in accordance with Delegations of Authority.'' In addition, SBA proposed to revise § 120.840(b) to reflect the modernized application submission process for the Accredited Lenders Program (ALP), which will allow CDCs to submit ALP applications electronically into the Corporate Governance Repository, rather than apply to the Lead SBA Office. No comments were received on these proposed changes and SBA is adopting them as proposed.

Section 120.845. Paragraph (c)(1) of this section, which sets forth the eligibility criteria for the Premier Certified Lenders Program, refers to the criteria that are listed for the Accredited Lenders Program in § 120.841(a) through (h). However, the criteria are listed only in § 120.841(a) through (f). SBA

proposed to amend paragraph (c)(1) by removing ''through (h)'' at the end of the sentence and adding ''through (f)'' in its place. No comments were received on this proposed rule change and SBA is adopting it as proposed.

Section 120.850. SBA proposed to remove this section because the designation of Associate Development Company ceased to exist on January 1, 2004. No comments were received on this proposed rule change and SBA is adopting it as proposed.

Section 120.862. SBA proposed to amend paragraph (b) by adding the three energy public policy goals described in paragraphs (I), (J) and (K) of section 501(d)(3) of the Small Business Investment Act of 1958, as amended, to the list of economic development objectives. These three goals relate to the reduction of energy consumption by at least 10 percent, the increased use of sustainable design, and plant, equipment and process upgrades of renewable energy sources. This change would make the regulations consistent with the statute. No comments were received for this proposed rule change and SBA is adopting it as proposed.

Section 120.1400. Under current 13 CFR 120.1400(a), a CDC that obtains approval for 504 loans after October 20, 2017, and an SBA Supervised Lender that makes 7(a) guaranteed loans after October 20, 2017, consent to the applicable receivership remedies in 13 CFR 120.1500(c). Pursuant to SOP 50 10 5(J), SBA deemed the consent by a CDC under 13 CFR 120.1400(a)(1), and the consent by an SBA Supervised Lender under 13 CFR 120.1400(a)(2), to take effect on January 1, 2018, which was the effective date of the SOP 50 10 5(J). As proposed, the amendments to this rule would codify the SOP provision into the rule and would also clarify that the CDC's or the SBA Supervised Lender's consent does not preclude them from contesting whether or not SBA has established the grounds for seeking the remedy of a receivership. No comments were received on this proposed rule change and SBA is adopting it as proposed.

Section 120.1500. SBA proposed to amend paragraphs (c)(3) and (e)(3) to incorporate into the regulations the factors set forth in the current SOP 50 10 that SBA considers when seeking the appointment of a receiver and the scope of the receivership. The appointment of a receiver is only one of several types of enforcement actions set forth in 13 CFR 120.1500, and typically, SBA will use its receivership authority as a remedy of last resort. The factors vary slightly depending upon the type of SBA Lender and whether the SBA Lender has assets unrelated to SBA loan program activities. No comments were received for this proposed rule change and SBA is adopting it as proposed.

Section 123.17. SBA proposed to amend this section to remove the reference to lead-based paint. As stated above, with the proposed removal of § 120.173, Lead-based paint, which prohibits the use of lead-based paint if loan proceeds are for the construction or rehabilitation of a residential structure, the removal of the reference to lead-based paint in § 123.17 conforms this regulation to the removal of § 120.173 and will avoid confusion. No comments were received on this proposed rule change and SBA is adopting it as proposed.

Compliance With Executive Orders 12866, 12988, 13132, 13563, the Congressional Review Act (5 U.S.C. 801–808), the Paperwork Reduction Act (44 U.S.C., Ch. 35), and the Regulatory Flexibility Act (5 U.S.C. 601–612)

Executive Order 12866

The Office of Management and Budget has determined that this final rule is considered a ''significant regulatory action'' under Executive Order 12866. It is important to note that, while OMB has determined that this rule is considered a ''significant regulatory action,'' OMB did not determine that this final rule is economically significant. The next section contains SBA's Regulatory Impact Analysis.

Regulatory Impact Analysis

1. Is there a need for this regulatory action?

This final rule removes or revises various regulations governing the Agency's business loan programs that are obsolete, unnecessary, ineffective, or burdensome. This final rule also makes several technical amendments to incorporate recent statutory changes and other non-substantive changes. In addition, because this final rule removes a regulation that is cross-referenced in a regulation in SBA's Disaster Loan Program, this rule makes one conforming change to a regulation in the Disaster Loan Program. SBA believes it is necessary to provide clear regulatory guidance for Lenders to encourage participation in extending loans, particularly smaller dollar loans, to eligible small businesses, and to enable participating Lenders to extend credit with confidence in their ability to rely on payment by SBA of the guaranty, if necessary. As identified more specifically in the identified benefits below, the change to § 120.110(k) is needed to align SBA's regulations with Supreme Court precedent and eliminate the uncertainty and confusion caused by the perceived inconsistency between that precedent and the current regulatory text.

Further, the Agency believes it needs to streamline Loan Program Requirements and reduce regulatory burdens to facilitate robust participation in the business loan programs that assist small U.S. businesses, particularly those businesses in underserved markets.

2. What are the potential benefits and costs of this regulatory action?

As stated above, this final rule is a comprehensive effort to remove or revise regulations governing the Agency's business loan programs that are obsolete, unnecessary, ineffective, or burdensome. In addition, this final rule removes information from the regulations that is confusing, misleading, or obsolete. SBA believes the removal or revision of these regulations will make the regulations easier to understand and use and will benefit Lenders and Borrowers by saving them time in reading and inquiring about obsolete, confusing, or inaccurate information.

Further, several of the changes will provide clarity and certainty to both Lenders and Borrowers in determining eligibility for SBA financial assistance. Section 120.110 of the regulations lists the types of businesses that are ineligible for SBA business loans. For clarity, SBA proposed to make changes to three of the types of businesses on the list. First, SBA proposed to amend paragraph (h), which currently provides that businesses ''engaged in any illegal activity'' are ineligible, by revising it to provide that the business is ineligible if it is ''engaged in any activity that is illegal under Federal, State, or local law''. SBA wants to make it clear, consistent with its longstanding interpretation of this regulation, that the business is ineligible if it is engaged in any activity that is illegal at any level of government in the jurisdiction in which the business is operating.

Second, SBA proposed to remove and reserve paragraph (k), which currently provides that a business is ineligible if it is ''principally engaged in teaching, instructing, counseling or indoctrinating religion or religious beliefs, whether in a religious or secular setting''. SBA explained that this provision, which was promulgated in 1996, could be interpreted as impermissibly imposing a special disability on organizations based on their religious status. Thus, the regulation may have caused uncertainty for Lenders and Borrowers in

determining the eligibility of an applicant for an SBA business loan.

In order ensure that the proceeds of SBA business loans are used in a manner consistent with the requirements of the First Amendment to the U.S. Constitution, SBA's practice has been to apply relevant Supreme Court caselaw to the facts of each individual case. The removal of section 120.110(k) will eliminate uncertainty for Lenders and Borrowers and, as explained in the preamble to the proposed rule and this final rule, SBA will continue to apply relevant Supreme Court caselaw to ensure that the proceeds of SBA business loans are used in a manner consistent with the First Amendment to the U.S. Constitution. Although this change is beneficial to increase clarity and remove uncertainty, it will not result in any specific change in the way SBA implements this provision. SBA is currently following the Supreme Court precedent when analyzing eligibility for SBA financial assistance as it believes that any regulation which may be inconsistent with that precedent cannot be given effect.

Third, SBA proposed to revise paragraph (n), which currently provides that a business is ineligible if an Associate ''is incarcerated, on probation, on parole, or has been indicted for a felony or a crime of moral turpitude''. With respect to ineligibility based on indictment for a crime, SBA proposed to change the phrase to ''is under indictment'' from ''has been indicted''. SBA explained that it wants to make clear, consistent with its longstanding interpretation of this regulation, that the business is not ineligible if an Associate has a history of ever being indicted (but not convicted), but would be ineligible only if an Associate is under indictment when the business submits a loan application or prior to loan approval. In addition, SBA proposed to replace the phrase, ''a crime of moral turpitude'', which is not always easily defined and can vary by State, with ''a crime involving or related to financial misconduct or a false statement''. SBA explained that it believes that the proposed standard is clearer and more relevant to SBA's responsibility to carry out the business loan programs in a financially prudent manner. As stated above, SBA believes it is necessary to provide clear guidance to enable Lenders to extend credit to eligible small businesses and these regulatory changes will help provide that clarity for Lenders and Borrowers.

In addition to the benefits described above, there are some costs associated with this rule that could impact small businesses. The removal of LIBOR as an optional base rate for variable rate 7(a) loans will cause some Borrowers to modify their loan documents to specify a new base rate. Any costs associated with modifying loan documents are an unavoidable result of the phase-out of LIBOR that will occur in 2023, and the loan documents will need to be modified whether or not this rule is promulgated.

In addition, SBA proposed to use loan amounts as the basis upon which the variable interest rate is set, instead of loan maturities. By basing the rates on loan amounts and allowing Lenders to charge higher rates for smaller loans, Lenders would have more incentive to make smaller loans to businesses in need of credit on reasonable terms. In addition, the maximum variable interest rates described above would apply to all types of 7(a) loans. Currently, the maximum variable interest rate that Lenders are permitted to charge may vary depending upon the type of 7(a) loan the Lender is making, *i.e.,* SBA Express, Export Express, Community Advantage Pilot, or regular 7(a). By standardizing the maximum variable interest rates for all 7(a) loans, SBA is streamlining and simplifying its regulations, and reducing the burden on Lenders.

3. What are the alternatives to this final rule?

The alternative to issuing this final rule is to not make any changes to the regulations at all. However, that alternative would leave obsolete, unnecessary, confusing, and inaccurate or misleading information in the Agency's regulations governing its business loan programs, which would create uncertainty and confusion for both Lenders and Borrowers. SBA chose to proceed with this final rule in order to reduce the burden on Lenders in order to encourage participation in SBA lending programs, and to provide clarity and certainty for both Lenders and Borrowers.

Executive Order 12988

This action meets applicable standards set forth in sections 3(a) and 3(b)(2) of Executive Order 12988, Civil Justice Reform, to minimize litigation, eliminate ambiguity, and reduce burden. This action does not have preemptive effect or retroactive effect.

Executive Order 13132

SBA has determined that this final rule would not have federalism implications as defined in Executive Order 13132. It would not have substantial direct effects on the States, on the relationship between the National Government and the States, or on the distribution of power and responsibilities among the various levels of government, as specified in the Executive Order. Therefore, for the purposes of Executive Order 13132, SBA has determined that this final rule does not warrant the preparation of a Federalism Assessment.

Executive Order 13563

As discussed above, SBA received a significant number of public comments in response to the **Federal Register** document requesting the public's input.

Congressional Review Act, 5 U.S.C. 801–808

OMB's Office of Information and Regulatory Affairs has determined that this rule is not a major rule under subtitle E of the Small Business Regulatory Enforcement Fairness Act of 1996 (also known as the Congressional Review Act), 5 U.S.C. 804(2). SBA will submit a report containing this rule and other required information to the U.S. Senate, the U.S. House of Representatives, and the Comptroller General of the United States.

Paperwork Reduction Act, 44 U.S.C., Ch. 35

SBA has determined that this final rule would not impose any additional reporting or recordkeeping requirements under the Paperwork Reduction Act.

Regulatory Flexibility Act, 5 U.S.C. 601–612.

When an agency issues a final rule, the Regulatory Flexibility Act (RFA) requires the agency to address public comments and ''describe the impact of the proposed rule on small entities.'' (5 U.S.C. 603(a)). SBA has complied with these requirements. Furthermore, section 605 of the RFA allows an agency to certify a rule, in lieu of preparing an analysis, if the final rulemaking is not expected to have a significant economic impact on a substantial number of small entities.

This final rule is a comprehensive effort to remove information from the regulations that are confusing and misleading, which would save Lenders and Borrowers time in reading and inquiring about obsolete or inaccurate information.

In addition, there are some costs associated with this rule that could impact small businesses. The removal of LIBOR as an optional base rate for variable rate 7(a) loans will cause some Borrowers to modify their loan documents to specify a new base rate. Any costs associated with modifying

loan documents are an unavoidable result of the phase-out of LIBOR that will occur in 2023, and the loan documents will need to be modified whether or not this rule is promulgated. SBA estimates only 3% of active SBA business loans could be affected by this change and that the burden created would be $1,622,988 in the first year that LIBOR is discontinued and would not be repeated in subsequent years.

Based on the foregoing, the Administrator of the SBA hereby certifies that this final rule will not have a significant economic impact on a substantial number of small entities. The SBA invites comments from the public on this certification.

List of Subjects

13 CFR Part 120

Loan programs—business, Reporting and recordkeeping requirements, Small businesses, Veterans.

13 CFR Part 123

Disaster assistance, Loan programs-business, Small businesses.

For the reasons stated in the preamble, SBA amends 13 CFR parts 120 and 123 as follows:

PART 120—BUSINESS LOANS

■ 1. The authority citation for 13 CFR part 120 continues to read as follows:

Authority: 15 U.S.C. 634(b)(6), (b)(7), (b)(14), (h), and note, 636(a), (h) and (m), and note, 636m, 650, 657t, and note, 657u, and note, 687(f), 696(3), and (7), and note, and 697, 697a and e, and note; Public Law 116–260, 134 Stat. 1182.

■ 2. Amend § 120.10 by revising the first sentence of the definition of ''Risk Rating'' to read as follows:

§ 120.10 Definitions.

* * * * *

Risk Rating is an SBA internal composite rating assigned to individual SBA Lenders and Intermediaries that reflects the risk associated with the SBA Lender's or Intermediary's portfolio of SBA loans. * * *

* * * * *

§ 120.103 [Removed]

■ 3. Remove § 120.103.

■ 4. Amend § 120.110 by revising paragraph (h), removing and reserving paragraph (k), and revising paragraph (n).

The revisions read as follows:

§ 120.110 What businesses are ineligible for SBA business loans?

* * * * *

(h) Businesses engaged in any activity that is illegal under Federal, State, or local law;

* * * * *

(n) Businesses with an Associate who is incarcerated, on probation, on parole, or is under indictment for a felony or any crime involving or relating to financial misconduct or a false statement;

* * * * *

§ 120.111 [Amended]

■ 5. Amend § 120.111 by removing the last sentence of the introductory text.

§ 120.173 [Removed]

■ 6. Remove § 120.173.

■ 7. Amend § 120.212 by revising paragraph (b) to read as follows:

§ 120.212 What limits are there on loan maturities?

* * * * *

(b) Ten years or less, unless it finances or refinances real estate or equipment with a useful life exceeding ten years. The term for a loan to finance equipment and/or leasehold improvements may include an additional reasonable period, not to exceed 12 months, when necessary to complete the installation of the equipment and/or complete the leasehold improvements.

* * * * *

■ 8. Amend § 120.214 by:

■ a. Revising the introductory paragraph and paragraphs (c) and (d);

■ b. Removing paragraph (e); and

■ c. Redesignating paragraph (f) as paragraph (e).

The revisions read as follows:

§ 120.214 What conditions apply for variable interest rates?

A Lender may use a variable rate of interest for guaranteed loans under the following conditions:

* * * * *

(c) *Base rate.* The base rate will be one of the following: the prime rate or the Optional Peg Rate. The prime rate will be that which is in effect on the first business day of the month, as printed in a national financial newspaper published each business day. SBA may from time to time permit the use of alternative base rate options that are widely adopted for small business commercial lending and will publish notice of such alternative options in the **Federal Register**. SBA publishes the Optional Peg Rate quarterly in the **Federal Register**.

(d) *Maximum Allowable Variable Interest Rates.* The maximum allowable variable interest rates are set forth below, with the initial maximum allowable rate for the loan determined as of the date SBA receives the loan application:

(1) For all 7(a) loans of $50,000 and less, the interest rate shall not exceed six and a half (6.5) percentage points over the base rate;

(2) For all 7(a) loans of more than $50,000 and up to and including $250,000, the maximum interest rate shall not exceed six (6.0) percentage points over the base rate;

(3) For all 7(a) loans of more than $250,000 and up to and including $350,000, the maximum interest rate shall not exceed four and a half (4.5) percentage points over the base rate; and

(4) For all 7(a) loans of more than $350,000, the maximum interest rate shall not exceed three (3.0) percentage points over the base rate.

* * * * *

§ 120.215 [Removed]

■ 9. Remove § 120.215.

§ 120.220 [Amended]

■ 10. Amend § 120.220(a)(3) by removing the phrase ''In fiscal years when the 7(a) program is at zero subsidy,''.

§ 120.222 [Amended]

■ 11. Amend § 120.222 by removing the word ''in'' before the words ''any premium received''.

■ 12. Revise § 120.350 to read as follows:

§ 120.350 Policy.

Section 7(a)(15) of the Act authorizes SBA to guarantee a loan to a:

(a) Qualified employee trust (''ESOP'') to:

(1) Help finance the growth of its employer's small business; or

(2) Purchase ownership or voting control of the employer; and a

(b) Small business concern, if the proceeds from the loan are only used to make a loan to a qualified employee trust that results in the qualified employee trust owning at least 51 percent of the small business concern.

■ 13. Revise § 120.352 to read as follows:

§ 120.352 Use of proceeds.

Loan proceeds may be used for:

(a) *Qualified employee trust.* A qualified employee trust may use loan proceeds for two purposes:

(1) *Qualified employer securities.* A qualified employee trust may relend loan proceeds to the employer by purchasing qualified employer securities. The small business concern

may use these funds for any general 7(a) purpose.

(2) *Control of employer.* A qualified employee trust may use loan proceeds to purchase a controlling interest (51 percent) in the employer. Ownership and control must vest in the trust by the time the loan is repaid.

(b) *Small business concern.* A small business concern may only use loan proceeds to make a loan to a qualified employee trust that results in the qualified employee trust owning at least 51 percent of the small business concern.

§§ 120.370 and 120.380 through 120.383 [Removed]

■ 14. Remove §§ 120.370 and 120.380 through 120.383.

§ 120.420 [Amended]

■ 15. Amend § 120.420 by removing paragraph (b) and redesignating paragraphs (c) through (k) as paragraphs (b) through (j).

■ 16. Amend § 120.432 by adding a sentence at the end of paragraph (a) to read as follows:

§ 120.432 Under what circumstances does this subpart permit sales of, or sales of participating interests in, 7(a) loans?

(a) * * * This paragraph (a) applies to all 7(a) loans purchased from any Federal or state banking regulator, any receiver, or any conservator, unless SBA agrees otherwise in writing.

* * * * *

§ 120.453 [Removed]

■ 17. Remove § 120.453.

§ 120.470 [Amended]

■ 18. Amend § 120.470 in paragraph (d)(1) by removing the number ''$1,000'' and adding the number ''$10,000'' in its place.

§ 120.532 [Removed]

■ 19. Remove § 120.532.

§ 120.540 [Amended]

■ 20. Amend § 120.540 in paragraph (g) by removing the term ''D/FA'' from the first sentence and adding in its place the phrase ''Director/Office of Financial Program Operations (D/OFPO)'' and by removing the term ''D/FA'' from the second and fourth sentences and adding in its place the term ''D/OFPO''.

§ 120.542 [Amended]

■ 21. In § 120.542, amend paragraphs (d) and (e) by removing the term ''D/FA'' wherever it appears and adding in its place the term ''D/OFPO''.

§ 120.701 [Amended]

■ 22. Amend § 120.701 by removing paragraph (g) and redesignating paragraph (h) as paragraph (g).

§ 120.706 [Amended]

■ 23. Amend § 120.706 in the last sentence of paragraph (a) by removing ''5 million'' and adding in its place ''6 million''.

§ 120.707 [Amended]

■ 24. Amend § 120.707 in the last sentence of paragraph (b) by removing the word ''six'' and adding in its place the word ''seven''.

■ 25. Amend § 120.712 by:

■ a. Revising paragraph (b)(1); and

■ b. Removing the number ''25'' and adding in its place the number ''50'' in paragraph (d).

The revision to read as follows:

§ 120.712 How does an Intermediary get a grant to assist Microloan borrowers?

* * * * *

(b) * * *

(1) Up to 50 percent of the grant funds may be used to provide information and technical assistance to prospective Microloan borrowers; provided, however, that no more than 5 percent of the grant funds may be used to market or advertise the products and services of the Microloan Intermediary directly related to the Microloan Program; and

* * * * *

§§ 120.714, 120.715, and 120.800 [Removed]

■ 26. Remove and reserve §§ 120.714, 120.715, and 120.800.

■ 27. Amend § 120.812 by revising paragraph (a)(2) and by adding a sentence at the end of paragraph (d) to read as follows:

§ 120.812 Probationary period for newly certified CDCs.

(a) * * *

(2) A one-year extension of probation. If a one-year extension of probation is granted, at the end of this extension period, the CDC must petition the Lead SBA Office for permanent CDC status or an additional one-year extension of probation.

* * * * *

(d) * * * If SBA declines the petition, the CDC will no longer have authority to participate in the 504 Loan Program and SBA will direct the CDC to transfer all funded and/or approved loans to another CDC, SBA, or another servicer approved by SBA.

■ 28. Amend § 120.840 by revising paragraph (b) to read as follows:

§ 120.840 Accredited Lenders Program (ALP).

* * * * *

(b) *Application.* A CDC must apply for ALP status by submitting an application in accordance with SBA's Standard Operating Procedure 50 10, available at *http://www.sba.gov.* A final decision will be made by the appropriate SBA official in accordance with Delegations of Authority.

* * * * *

§ 120.845 [Amended]

■ 29. Amend § 120.845 in paragraph (c)(1) by removing the phrase ''through (h)'' and adding in its place the phrase ''through (f)''.

§ 120.850 [Removed]

■ 30. Remove the undesignated center heading ''Associate Development Companies (ADCs)'' and § 120.850.

■ 31. Amend § 120.862(b) by:

■ a. Removing ''or'' at the end of paragraph (9);

■ b. Removing the period at the end of paragraph (10) and adding ';'' in its place; and

■ c. Adding paragraphs (b)(11) through (13).

The additions read as follows:

§ 120.862 Other economic development objectives.

* * * * *

(b) * * *

(11) Reduction of energy consumption by at least 10 percent;

(12) Increased use of sustainable design, including designs that reduce the use of greenhouse gas emitting fossil fuels, or low-impact design to produce buildings that reduce the use of non-renewable resources and minimize environmental impact; or

(13) Plant, equipment and process upgrades of renewable energy sources such as the small-scale production of energy for individual buildings' or communities' consumption, commonly known as micropower, or renewable fuels producers including biodiesel and ethanol producers.

■ 32. Amend § 120.1400 by:

■ a. Removing the date ''October 20, 2017'' in paragraphs (a)(1) and (2) and adding in their place the date ''January 1, 2018''; and

■ b. Adding two sentences to the end of paragraphs (a)(1) and (2).

The additions read as follows:

§ 120.1400 Grounds for enforcement actions—SBA Lenders.

(a) * * *

(1) * * * The CDC's consent does not preclude the CDC from contesting whether or not SBA has established the

grounds for seeking the remedy of a receivership. A CDC's consent to receivership as a remedy does not require SBA to seek appointment of a receiver in any particular SBA enforcement action.

(2) * * * The SBA Supervised Lender's consent does not preclude such Lender from contesting whether or not SBA has established the grounds for seeking the remedy of a receivership. The SBA Supervised Lender's consent to receivership as a remedy does not require SBA to seek appointment of a receiver in any particular SBA enforcement action.

* * * * *

■ 33. Amend § 120.1500 by adding a sentence at the end of paragraph (c)(3), adding paragraphs (c)(3)(i) and (ii), and adding two sentences after the first sentence of paragraph (e)(3) to read as follows:

§ 120.1500 Types of enforcement actions—SBA Lenders.

* * * * *

(c) * * *

(3) * * * In deciding whether to seek the appointment of a receiver and in determining the scope of a receivership, SBA will consider the following factors, in its discretion:

(i) for NFRLs:

(A) the existence of fraud or false statements;

(B) the NFRL's refusal to cooperate with SBA enforcement action instructions or orders;

(C) the NFRL's insolvency (legal or equitable);

(D) the size of the NFRL's SBA loan portfolio(s) in relation to other activities of the NFRL;

(E) the dollar amount of any claims SBA may have against the NFRL;

(F) the NFRL's failure to comply materially with any requirement imposed by Loan Program Requirements; and/or

(G) the existence of other non-SBA enforcement actions against the NFRL;

(ii) for SBLCs:

(A) the existence of fraud or false statements;

(B) the SBLC's refusal to cooperate with SBA enforcement action instructions or orders;

(C) the SBLC's insolvency (legal or equitable);

(D) the dollar amount of any claims SBA may have against the SBLC; and/or

(E) the SBLC's failure to comply materially with any requirement imposed by Loan Program Requirements.

* * * * *

(e) * * *

(3) * * * SBA will limit the scope of the receivership to the CDC's assets related to the SBA loan program(s) except where the CDC's business is almost exclusively SBA-related. SBA will only seek a receivership if there is either the existence of fraud or false statements, or if the CDC has refused to cooperate with SBA enforcement action instructions or orders. * * *

PART 123—DISASTER LOAN PROGRAM

■ 34. The authority citation for part 123 continues to read as follows:

Authority: 15 U.S.C. 632, 634(b)(6), 636(b), 636(d), and 657n; Section 1110, Pub. L. 116–136, 134 Stat. 281; and Section 331, Pub. L. 116–260, 134 Stat. 1182.

§ 123.17 [Amended]

■ 35. Amend § 123.17 by removing the words ''lead-based paint,'' and removing the words ''§§ 120.170 through 120.175'' and inserting ''§§ 120.170 through 120.172, 120.174 and 120.175'' in their place.

Isabella Casillas Guzman,

Administrator.

[FR Doc. 2022–13483 Filed 6–29–22; 8:45 am]

BILLING CODE 8026–03–P

DEPARTMENT OF TRANSPORTATION

Federal Aviation Administration

14 CFR Part 71

[Docket No. FAA–2021–0994; Airspace Docket No. 21–AGL–14]

RIN 2120–AA66

Amendment of VOR Federal Airways V–7, V–341, and V–493; in the Vicinity of Menominee, MI

AGENCY: Federal Aviation Administration (FAA), DOT.

ACTION: Final rule.

SUMMARY: This action amends VHF Omnidirectional Range (VOR) Federal airways V–7, V–341, and V–493, in the vicinity of Menominee, MI. The airway amendments are necessary due to the planned decommissioning of the VOR portion of the Menominee, MI, VOR/Distance Measuring Equipment (DME) navigational aid (NAVAID). The Menominee VOR is being decommissioned as part of the FAA's VOR Minimum Operational Network (VOR MON) program.

DATES: Effective date 0901 UTC, September 8, 2022. The Director of the Federal Register approves this incorporation by reference action under 1 CFR part 51, subject to the annual revision of FAA Order JO 7400.11 and publication of conforming amendments.

ADDRESSES: FAA Order JO 7400.11F, Airspace Designations and Reporting Points, and subsequent amendments can be viewed online at *https://www.faa.gov/air_traffic/publications/.* For further information, you can contact the Rules and Regulations Group, Federal Aviation Administration, 800 Independence Avenue SW, Washington, DC 20591; telephone: (202) 267–8783.

FOR FURTHER INFORMATION CONTACT: Colby Abbott, Rules and Regulations Group, Office of Policy, Federal Aviation Administration, 800 Independence Avenue SW, Washington, DC 20591; telephone: (202) 267–8783.

SUPPLEMENTARY INFORMATION:

Authority for This Rulemaking

The FAA's authority to issue rules regarding aviation safety is found in Title 49 of the United States Code. Subtitle I, Section 106 describes the authority of the FAA Administrator. Subtitle VII, Aviation Programs, describes in more detail the scope of the agency's authority. This rulemaking is promulgated under the authority described in Subtitle VII, Part A, Subpart I, Section 40103. Under that section, the FAA is charged with prescribing regulations to assign the use of the airspace necessary to ensure the safety of aircraft and the efficient use of airspace. This regulation is within the scope of that authority as it modifies the airway structure as necessary to preserve the safe and efficient flow of air traffic within the National Airspace System.

History

The FAA published a noticed of proposed rulemaking for Docket No. FAA–2021–0994 in the **Federal Register** (86 FR 67377; November 26, 2021), amending VOR Federal airways V–7, V–341, and V–493 in the vicinity of Menominee, MI. The proposed amendments were due to the planned decommissioning of the VOR portion of the Menominee, MI, VOR/DME NAVAID. The FAA invited interested parties to participate in this rulemaking effort by submitting written comments on the proposal. No comments were received.

VOR Federal airways are published in paragraphs 6010(a) of FAA Order JO 7400.11F, dated August 20, 2021, and effective September 15, 2021, which are incorporated by reference in 14 CFR 71.1. The VOR Federal airways listed in

this document will be published subsequently in FAA Order JO 7400.11.

Availability and Summary of Documents for Incorporation by Reference

This action to amends FAA Order JO 7400.11F, Airspace Designations and Reporting Points, dated August 10, 2021, and effective September 15, 2021. FAA Order JO 7400.11F is publicly available as listed in the **ADDRESSES** section of this document. FAA Order JO 7400.11F lists Class A, B, C, D, and E airspace areas, air traffic service routes, and reporting points.

The Rule

This action amends 14 CFR part 71 by amending three VOR Federal airways, V–7, V–341, and V–493, in the vicinity of Menominee, MI, due to the planned decommissioning of the VOR portion of the Menominee, MI, VOR/DME. The airway amendment actions are described below.

V–7: V–7 extends between the Dolphin, FL, VOR/Tactical Air Navigation (VORTAC) and the Muscle Shoals, AL, VORTAC; between the Pocket City, IN, VORTAC and the intersection of the Chicago Heights, IL, VORTAC 358° radial and the Badger, WI, VOR/DME 117° radial (PETTY fix); and between the Green Bay, WI, VORTAC and the Sawyer, MI, VOR/DME. The airspace below 2,000 feet MSL outside the United States is excluded and the portion outside the United States has no upper limit. This action removes the airway segment between the Green Bay, WI, VORTAC and Sawyer, MI, VOR/DME. Additionally, since the airway lies wholly within the United States, this action removes the 2,000 MSL exclusionary language and the upper limit language for the airspace outside the United States. The unaffected portions of the existing airway remain as charted.

V–341: V–341 extends between the Cedar Rapids, IA, VOR/DME and the Houghton, MI, VOR/DME. This action removes the airway segment between the Green Bay, WI, VORTAC and the Iron Mountain, MI, VOR/DME. The resulting airway extends between the Cedar Rapids, IA, VOR/DME and the Green Bay, WI, VORTAC; and between the Iron Mountain, MI, VOR/DME and the Houghton, MI, VOR/DME.

V–493: V–493 extends between the Livingston, TN, VOR/DME and the Appleton, OH, VORTAC; and between the Menominee, MI, VOR/DME and the Rhinelander, WI, VOR/DME. This action removes the airways segment between the Menominee, MI, VOR/DME and the Rhinelander, WI, VOR/DME. The resulting airway extends between the Livingston, TN, VOR/DME and the Appleton, OH, VORTAC.

All of the NAVAID radials listed in the VOR Federal airway descriptions below are unchanged and stated in True degrees.

FAA Order JO 7400.11, Airspace Designations and Reporting Points, is published yearly and effective on September 15.

Regulatory Notices and Analyses

The FAA determined that this regulation only involves an established body of technical regulations for which frequent and routine amendments are necessary to keep them operationally current. It, therefore: (1) is not a ''significant regulatory action'' under Executive Order 12866; (2) is not a ''significant rule'' under Department of Transportation (DOT) Regulatory Policies and Procedures (44 FR 11034; February 26, 1979); and (3) does not warrant preparation of a regulatory evaluation as the anticipated impact is so minimal. Since this is a routine matter that only affects air traffic procedures and air navigation, it is certified that this rule, when promulgated, does not have a significant economic impact on a substantial number of small entities under the criteria of the Regulatory Flexibility Act.

Environmental Review

The FAA determined that this action of amending VOR Federal airways V–7, V–341, and V–493, due to the planned decommissioning of the VOR portion of the Menominee VOR/DME NAVAID, qualifies for categorical exclusion under the National Environmental Policy Act (42 U.S.C. 4321 *et seq.*) and its implementing regulations at 40 CFR part 1500, and in accordance with FAA Order 1050.1F, Environmental Impacts: Policies and Procedures, paragraph 5–6.5a, which categorically excludes from further environmental impact review rulemaking actions that designate or modify classes of airspace areas, airways, routes, and reporting points (see 14 CFR part 71, Designation of Class A, B, C, D, and E Airspace Areas; Air Traffic Service Routes; and Reporting Points). As such, this action is not expected to result in any potentially significant environmental impacts. In accordance with FAA Order 1050.1F, paragraph 5–2 regarding Extraordinary Circumstances, the FAA reviewed this action for factors and circumstances in which a normally categorically excluded action may have a significant environmental impact requiring further analysis. Accordingly, the FAA determined that no extraordinary circumstances exist that warrant preparation of an environmental assessment or environmental impact study.

List of Subjects in 14 CFR Part 71

Airspace, Incorporation by reference, Navigation (air).

The Amendment

In consideration of the foregoing, the Federal Aviation Administration amends 14 CFR part 71 as follows:

PART 71—DESIGNATION OF CLASS A, B, C, D, AND E AIRSPACE AREAS; AIR TRAFFIC SERVICE ROUTES; AND REPORTING POINTS

■ 1. The authority citation for 14 CFR part 71 continues to read as follows:

Authority: 49 U.S.C. 106(f), 106(g); 40103, 40113, 40120; E.O. 10854, 24 FR 9565, 3 CFR, 1959–1963 Comp., p. 389.

§ 71.1 [Amended]

■ 2. The incorporation by reference in 14 CFR 71.1 of FAA Order JO 7400.11F, Airspace Designations and Reporting Points, dated August 10, 2021, and effective September 15, 2021, is amended as follows:

Paragraph 6010(a) Domestic VOR Federal Airways.

* * * * *

V–7 [Amended]

From Dolphin, FL; INT Dolphin 299° and Lee County, FL, 120° radials; Lee County; Lakeland, FL; Cross City, FL; Seminole, FL; Wiregrass, AL; INT Wiregrass 333° and Montgomery, AL, 129° radials; Montgomery; Vulcan, AL; to Muscle Shoals, AL. From Pocket City, IN; INT Pocket City 016° and Terre Haute, IN, 191° radials; Terre Haute; Boiler, IN; Chicago Heights, IL; to INT Chicago Heights 358° and Badger, WI, 117° radials.

* * * * *

V–341 [Amended]

From Cedar Rapids, IA; Dubuque, IA; Madison, WI; Oshkosh, WI; to Green Bay, WI. From Iron Mountain, MI; Sawyer, MI; to Houghton, MI.

* * * * *

V–493 [Amended]

From Livingston, TN; Lexington, KY; York, KY; INT York 030° and Appleton, OH, 183° radials; to Appleton.

* * * * *

Issued in Washington, DC, on June 23, 2022.

Scott M. Rosenbloom,

Manager, Airspace Rules and Regulations.

[FR Doc. 2022–13843 Filed 6–29–22; 8:45 am]

BILLING CODE 4910–13–P

DEPARTMENT OF TRANSPORTATION

Federal Aviation Administration

14 CFR Part 71

[Docket No. FAA–2021–1029; Airspace Docket No. 21–ACE–14]

RIN 2120–AA66

Amendment of VOR Federal Airway V–175 in the Vicinity of Malden, MO

AGENCY: Federal Aviation Administration (FAA), DOT.

ACTION: Final rule.

SUMMARY: This action modifies VHF Omnidirectional Range (VOR) Federal airway V–175 in the vicinity of Malden, MO. This action is necessary due to the planned decommissioning of the Malden, MO, VOR Tactical Air Navigation (VORTAC) facility, which provides navigation guidance for a segment of the route.

DATES: Effective date 0901 UTC, September 8, 2022. The Director of the Federal Register approves this incorporation by reference action under 1 CFR part 51, subject to the annual revision of FAA JO Order 7400.11 and publication of conforming amendments.

ADDRESSES: FAA Order JO 7400.11F, Airspace Designations and Reporting Points, and subsequent amendments can be viewed online at *https://www.faa.gov/air_traffic/publications/.* For further information, you can contact the Rules and Regulations Group, Federal Aviation Administration, 800 Independence Avenue SW, Washington, DC 20591; telephone: (202) 267–8783.

FOR FURTHER INFORMATION CONTACT: Paul Gallant, Rules and Regulations Group, Policy Directorate, Federal Aviation Administration, 800 Independence Avenue SW, Washington, DC 20591; telephone: (202) 267–8783.

SUPPLEMENTARY INFORMATION:

Authority for This Rulemaking

The FAA's authority to issue rules regarding aviation safety is found in Title 49 of the United States Code. Subtitle I, Section 106 describes the authority of the FAA Administrator. Subtitle VII, Aviation Programs, describes in more detail the scope of the agency's authority. This rulemaking is promulgated under the authority described in Subtitle VII, Part A, Subpart I, Section 40103. Under that section, the FAA is charged with prescribing regulations to assign the use of the airspace necessary to ensure the safety of aircraft and the efficient use of airspace. This regulation is within the scope of that authority as it modifies the route structure as necessary to preserve the safe and efficient flow of air traffic within the National Airspace System.

History

The FAA published a notice of proposed rulemaking for Docket No. FAA–2021–1029 in the **Federal Register** (86 FR 70423; December 10, 2021), modifying VOR Federal airway V–175. Interested parties were invited to participate in this rulemaking effort by submitting written comments on the proposal. No comments were received.

VOR Federal airways are published in paragraph 6010(a) of FAA Order JO 7400.11F, dated August 10, 2021, and effective September 15, 2021, which is incorporated by reference in 14 CFR 71.1. The ATS routes listed in this document will be published subsequently in FAA Order JO 7400.11.

Differences From the Proposal

Subsequent to the publication of the NPRM for this docket, the FAA published a final rule in the **Federal Register** (87 FR 2322; January 14, 2022) that modified V–175 to read as follows: ''From Malden, MO; Vichy, MO; Hallsville, MO. From Kirksville, MO; to Des Moines, IA. From Redwood Falls, MN; to Alexandria, MN.'' The change was due to the planned decommissioning of the VOR portion of the Worthington, MN VOR/DME facility. This version replaces the V–175 description that was published in the NPRM for Docket No. FAA–2021–1029 and is reflected in ''The Rule'' section, below.

Availability and Summary of Documents for Incorporation by Reference

This document amends FAA Order JO 7400.11F, Airspace Designations and Reporting Points, dated August 10, 2021, and effective September 15, 2021. FAA Order JO 7400.11F is publicly available as listed in the **ADDRESSES** section of this document. FAA Order JO 7400.11F lists Class A, B, C, D, and E airspace areas, air traffic service routes, and reporting points.

The Rule

This action amends 14 CFR part 71 by amending VOR Federal airway V–175 in the vicinity of Malden, MO, due to the planned decommissioning of the Malden, MO, VORTAC, as part of the FAA VOR MON program. The route change is described below.

V–175: V–175 currently consists of three separate parts: From Malden, MO; Vichy, MO; to Hallsville, MO. From Kirksville, MO; to Des Moines, IA. From Redwood Falls, MN; to Alexandria, MN.

This action removes the Malden VORTAC from the route description. As amended, V–175 extends, in three parts: From Vichy, MO, to Hallsville, MO. From Kirksville, MO, to Des Moines, IA. From Redwood Falls, MN to Alexandria, MN.

FAA Order JO 7400.11, Airspace Designations and Reporting Points, is published yearly and effective on September 15.

Regulatory Notices and Analyses

The FAA has determined that this regulation only involves an established body of technical regulations for which frequent and routine amendments are necessary to keep them operationally current. It, therefore: (1) is not a ''significant regulatory action'' under Executive Order 12866; (2) is not a ''significant rule'' under Department of Transportation (DOT) Regulatory Policies and Procedures (44 FR 11034; February 26, 1979); and (3) does not warrant preparation of a regulatory evaluation as the anticipated impact is so minimal. Since this is a routine matter that only affects air traffic procedures and air navigation, it is certified that this rule, when promulgated, does not have a significant economic impact on a substantial number of small entities under the criteria of the Regulatory Flexibility Act.

Environmental Review

The FAA has determined that this action of modifying VOR Federal airway V–175 due to the planned decommissioning of the Malden, MO, VORTAC, qualifies for categorical exclusion under the National Environmental Policy Act (42 U.S.C. 4321 *et seq.*) and its implementing regulations at 40 CFR part 1500, and in accordance with FAA Order 1050.1F, Environmental Impacts: Policies and Procedures, paragraph 5–6.5a, which categorically excludes from further environmental impact review rulemaking actions that designate or modify classes of airspace areas, airways, routes, and reporting points (see 14 CFR part 71, Designation of Class A, B, C, D, and E Airspace Areas; Air Traffic Service Routes; and Reporting Points); and paragraph 5–6.5b, which categorically excludes from further environmental impact review ''Actions regarding establishment of jet routes and Federal airways (see 14 CFR 71.15, *Designation of jet routes and VOR Federal airways*). . .''. As such, this action is not expected to result in any potentially significant environmental impacts. In accordance with FAA Order 1050.1F, paragraph 5–2 regarding Extraordinary Circumstances, the FAA

has reviewed this action for factors and circumstances in which a normally categorically excluded action may have a significant environmental impact requiring further analysis. The FAA has determined that no extraordinary circumstances exist that warrant preparation of an environmental assessment or environmental impact study.

List of Subjects in 14 CFR Part 71

Airspace, Incorporation by reference, Navigation (air).

The Amendment

In consideration of the foregoing, the Federal Aviation Administration amends 14 CFR part 71 as follows:

PART 71—DESIGNATION OF CLASS A, B, C, D, AND E AIRSPACE AREAS; AIR TRAFFIC SERVICE ROUTES; AND REPORTING POINTS

■ 1. The authority citation for part 71 continues to read as follows:

Authority: 49 U.S.C. 106(f), 106(g); 40103, 40113, 40120; E.O. 10854, 24 FR 9565, 3 CFR, 1959–1963 Comp., p. 389.

§ 71.1 [Amended]

■ 2. The incorporation by reference in 14 CFR part 71 of FAA Order JO 7400.11F, Airspace Designations and Reporting Points, dated August 10, 2021, and effective September 15, 2021, is amended as follows:

Paragraph 6010(a) Domestic VOR Federal Airways.

* * * * *

V–175 [Amended]

From Vichy, MO; to Hallsville, MO. From Kirksville, MO; to Des Moines, IA. From Redwood Falls, MN; to Alexandria, MN.

* * * * *

Issued in Washington, DC, on June 23, 2022.

Scott M. Rosenbloom,

Manager, Airspace Rules and Regulations.

[FR Doc. 2022–13880 Filed 6–29–22; 8:45 am]

BILLING CODE 4910–13–P

DEPARTMENT OF TRANSPORTATION

Federal Aviation Administration

14 CFR Part 71

[Docket No. FAA–2021–0972; Airspace Docket No. 21–AGL–27]

RIN 2120–AA66

Amendment of VOR Federal Airways V–26, V–193, and V–285, and Revocation of White Cloud, MI, Domestic Low Altitude Reporting Point in the Vicinity of White Cloud, MI

AGENCY: Federal Aviation Administration (FAA), DOT.

ACTION: Final rule.

SUMMARY: This action amends VHF Omnidirectional Range (VOR) Federal airways V–26, V–193, and V–285, and revokes the White Cloud, MI, domestic low altitude reporting point. The FAA is taking this action due to the planned decommissioning of the VOR portion of the White Cloud, MI, VOR/Distance Measuring Equipment (VOR/DME) navigational aid (NAVAID). The White Cloud VOR is being decommissioned in support of the FAA's VOR Minimum Operational Network (MON) program.

DATES: Effective date 0901 UTC, September 8, 2022. The Director of the Federal Register approves this incorporation by reference action under 1 CFR part 51, subject to the annual revision of FAA Order JO 7400.11 and publication of conforming amendments.

ADDRESSES: FAA Order JO 7400.11F, Airspace Designations and Reporting Points, and subsequent amendments can be viewed online at *https://www.faa.gov/air_traffic/publications/.* For further information, you can contact the Rules and Regulations Group, Federal Aviation Administration, 800 Independence Avenue SW, Washington, DC 20591; telephone: (202) 267–8783.

FOR FURTHER INFORMATION CONTACT: Colby Abbott, Rules and Regulations Group, Office of Policy, Federal Aviation Administration, 800 Independence Avenue SW, Washington, DC 20591; telephone: (202) 267–8783.

SUPPLEMENTARY INFORMATION:

Authority for This Rulemaking

The FAA's authority to issue rules regarding aviation safety is found in Title 49 of the United States Code. Subtitle I, Section 106 describes the authority of the FAA Administrator. Subtitle VII, Aviation Programs, describes in more detail the scope of the agency's authority. This rulemaking is promulgated under the authority described in Subtitle VII, Part A, Subpart I, Section 40103. Under that section, the FAA is charged with prescribing regulations to assign the use of the airspace necessary to ensure the safety of aircraft and the efficient use of airspace. This regulation is within the scope of that authority as it modifies the route structure as necessary to preserve the safe and efficient flow of air traffic within the National Airspace System.

History

The FAA published a notice of proposed rulemaking (NPRM) for Docket No. FAA–2021–0972 in the **Federal Register** (86 FR 62761; November 12, 2021), amending VOR Federal airways V–26, V–193, and V–285, and revoking the White Cloud, MI, domestic low altitude reporting point in the vicinity of White Cloud, MI. The proposed actions were due to the planned decommissioning of the VOR portion of the White Cloud, MI, VOR/DME NAVAID. Interested parties were invited to participate in this rulemaking effort by submitting written comments on the proposal. No comments were received.

VOR Federal airways are published in paragraph 6010(a) and Domestic Low Altitude Reporting Points are published in paragraph 7001 of FAA Order JO 7400.11F, dated August 10, 2021, and effective September 15, 2021, which is incorporated by reference in 14 CFR 71.1. The ATS route and Domestic Low Altitude Reporting Point actions listed in this document will be published subsequently in FAA Order JO 7400.11.

Availability and Summary of Documents for Incorporation by Reference

This document amends FAA Order JO 7400.11F, Airspace Designations and Reporting Points, dated August 10, 2021, and effective September 15, 2021. FAA Order JO 7400.11F is publicly available as listed in the **ADDRESSES** section of this document. FAA Order JO 7400.11F lists Class A, B, C, D, and E airspace areas, air traffic service routes, and reporting points.

Differences From the NPRM

Prior to the NPRM, the FAA published a rule for Docket No. FAA–2021–0086 in the **Federal Register** (86 FR 52961; September 24, 2021), amending V–285 by removing the airway segment between the White Cloud, MI, VOR/DME and Traverse City, MI, VOR/DME. That airway amendment was effective December 2, 2021, and was included in the NPRM.

The amendment to V–285 listed in The Proposal section of the NPRM proposed to remove the airway segment

between the Victory, MI, VOR/DME and Manistee, MI, VOR/DME. However, the amendment made by Docket No. FAA–2021–0086 removed the airway segment between the White Cloud, MI, VOR/DME and the Manistee, MI, VOR/DME. The proposed V–285 amendment should have reflected the FAA proposed to remove the airway segment between the Victory, MI, VOR/DME and White Cloud, MI, VOR/DME. That correction is included in this rule.

The Rule

This action amends 14 CFR part 71 by modifying VOR Federal airways V–26, V–193, and V–285, and revoking the White Cloud, MI, domestic low altitude reporting point due to the planned decommissioning of the White Cloud, MI, VOR. The VOR Federal airway and domestic low altitude reporting point actions are described below.

V–26: V–26 extends between the Blue Mesa, CO, VOR/DME and the Pierre, SD, VORTAC; and between the Redwood Falls, MN, VOR/DME and the White Cloud, MI, VOR/DME. The airway segment between the Green Bay, WI, VORTAC and White Cloud, MI, VOR/DME is removed. The unaffected portions of the existing airway remain as charted.

V–193: V–193 extends between the intersection of the Pullman, MI, VOR/DME 243° and Gipper, MI, VORTAC 310° radials (MUSKY fix) and the Sault Ste Marie, MI, VOR/DME. The airway segment between the intersection of the Pullman, MI, VOR/DME 243° and Gipper, MI, VORTAC 310° radials (MUSKY fix) and Traverse City, MI, VOR/DME is removed. The unaffected portions of the existing airway remain as charted.

V–285: V–285 currently extends between the Brickyard, IN, VORTAC and the White Cloud, MI, VOR/DME. The airway segment between the Victory, MI, VOR/DME and White Cloud, MI, VOR/DME is removed. The unaffected portions of the existing airway remain as charted.

White Cloud, MI: The White Cloud, MI, domestic low altitude reporting point is removed.

The NAVAID radials listed in the VOR Federal airway V–285 description below are unchanged and stated in True degrees.

FAA Order JO 7400.11, Airspace Designations and Reporting Points, is published yearly and effective on September 15.

Regulatory Notices and Analyses

The FAA has determined that this regulation only involves an established body of technical regulations for which frequent and routine amendments are necessary to keep them operationally current. It, therefore: (1) is not a ''significant regulatory action'' under Executive Order 12866; (2) is not a ''significant rule'' under Department of Transportation (DOT) Regulatory Policies and Procedures (44 FR 11034; February 26, 1979); and (3) does not warrant preparation of a regulatory evaluation as the anticipated impact is so minimal. Since this is a routine matter that will only affect air traffic procedures and air navigation, it is certified that this rule, when promulgated, will not have a significant economic impact on a substantial number of small entities under the criteria of the Regulatory Flexibility Act.

Environmental Review

The FAA has determined that this action of modifying VOR Federal airways V–26, V–193, and V–285, and revoking the White Cloud, MI, domestic low altitude reporting point, due to the planned decommissioning of the VOR portion of the White Cloud, MI, VOR/DME NAVAID, qualifies for categorical exclusion under the National Environmental Policy Act (42 U.S.C. 4321 *et seq.*) and its implementing regulations at 40 CFR part 1500, and in accordance with FAA Order 1050.1F, Environmental Impacts: Policies and Procedures, paragraph 5–6.5a, which categorically excludes from further environmental impact review rulemaking actions that designate or modify classes of airspace areas, airways, routes, and reporting points (see 14 CFR part 71, Designation of Class A, B, C, D, and E Airspace Areas; Air Traffic Service Routes; and Reporting Points). As such, this action is not expected to result in any potentially significant environmental impacts. In accordance with FAA Order 1050.1F, paragraph 5–2 regarding Extraordinary Circumstances, the FAA has reviewed this action for factors and circumstances in which a normally categorically excluded action may have a significant environmental impact requiring further analysis. The FAA has determined that no extraordinary circumstances exist that warrant preparation of an environmental assessment or environmental impact study.

List of Subjects in 14 CFR Part 71

Airspace, Incorporation by reference, Navigation (air).

The Amendment

In consideration of the foregoing, the Federal Aviation Administration amends 14 CFR part 71 as follows:

PART 71—DESIGNATION OF CLASS A, B, C, D, AND E AIRSPACE AREAS; AIR TRAFFIC SERVICE ROUTES; AND REPORTING POINTS

■ 1. The authority citation for 14 CFR part 71 continues to read as follows:

Authority: 49 U.S.C. 106(f), 106(g); 40103, 40113, 40120; E.O. 10854, 24 FR 9565, 3 CFR, 1959–1963 Comp., p. 389.

§ 71.1 [Amended]

■ 2. The incorporation by reference in 14 CFR 71.1 of FAA Order JO 7400.11F, Airspace Designations and Reporting Points, dated August 10, 2021, and effective September 15, 2021, is amended as follows:

Paragraph 6010(a) Domestic VOR Federal Airways.

* * * * *

V–26 [Amended]

From Blue Mesa, CO; Montrose, CO; 13 miles 112 MSL, 131 MSL, Grand Junction, CO; Meeker, CO; Cherokee, WY; Muddy Mountain, WY; 14 miles, 37 miles 75 MSL, 84 miles 90 MSL, Rapid City, SD; Philip, SD; to Pierre, SD. From Redwood Falls, MN; Farmington, MN; Eau Claire, WI; Wausau, WI; to Green Bay, WI.

* * * * *

V–193 [Amended]

From Traverse City, MI; Pellston, MI; to Sault Ste Marie, MI.

* * * * *

V–285 [Amended]

From Brickyard, IN; Kokomo, IN; Goshen, IN; INT Goshen 038° and Kalamazoo, MI, 191° radials; Kalamazoo; INT Kalamazoo 014° and Victory, MI, 167° radials; to Victory.

* * * * *

Paragraph 7001 Domestic Low Altitude Reporting Points.

* * * * *

White Cloud, MI [Removed]

* * * * *

Issued in Washington, DC, on June 23, 2021.

Scott M. Rosenbloom,

Manager, Airspace Rules and Regulations.

[FR Doc. 2022–13842 Filed 6–29–22; 8:45 am]

BILLING CODE 4910–13–P

DEPARTMENT OF TRANSPORTATION

Federal Aviation Administration

14 CFR Part 71

[Docket No. FAA–2021–0803; Airspace Docket No. 19–AAL–58]

RIN 2120–AA66

Amendment of United States Area Navigation Route (RNAV) T–222; Bethel, AK

AGENCY: Federal Aviation Administration (FAA), DOT.

ACTION: Final rule.

SUMMARY: This action amends United States Area Navigation (RNAV) route T–222 in the vicinity of Bethel, AK in support of a large and comprehensive T-route modernization project for the state of Alaska.

DATES: Effective date 0901 UTC, September 8, 2022. The Director of the Federal Register approves this incorporation by reference action under 1 CFR part 51, subject to the annual revision of FAA Order JO 7400.11 and publication of conforming amendments.

ADDRESSES: FAA Order JO 7400.11F, Airspace Designations and Reporting Points, and subsequent amendments can be viewed online at *https://www.faa.gov/air_traffic/publications/.* For further information, you can contact the Rules and Regulations Group, Federal Aviation Administration, 800 Independence Avenue SW, Washington, DC 20591; telephone: (202) 267–8783.

FOR FURTHER INFORMATION CONTACT: Jesse Acevedo, Rules and Regulations Group, Office of Policy, Federal Aviation Administration, 800 Independence Avenue SW, Washington, DC 20591; telephone: (202) 267–8783.

SUPPLEMENTARY INFORMATION:

Authority for This Rulemaking

The FAA's authority to issue rules regarding aviation safety is found in Title 49 of the United States Code. Subtitle I, Section 106 describes the authority of the FAA Administrator. Subtitle VII, Aviation Programs, describes in more detail the scope of the agency's authority. This rulemaking is promulgated under the authority described in Subtitle VII, Part A, Subpart I, Section 40103. Under that section, the FAA is charged with prescribing regulations to assign the use of the airspace necessary to ensure the safety of aircraft and the efficient use of airspace. This regulation is within the scope of that authority as it expands the availability of RNAV routing in Alaska and improves the efficient flow of air traffic within the National Airspace System by lessening the dependency on ground-based navigation.

History

The FAA published a notice of proposed rulemaking for Docket No. FAA–2021–0803 in the **Federal Register** (86 FR 52862; September 23, 2021), amending RNAV route T–222 in the vicinity of Bethel, AK, in support of a large, comprehensive T-route modernization project for the state of Alaska. Interested parties were invited to participate in this rulemaking effort by submitting comments on the proposal. There were no comments received.

United States Area Navigation Routes are published in paragraph 6011 of FAA Order JO 7400.11F dated August 10, 2021 and effective September 15, 2021, which is incorporated by reference in 14 CFR 71.1. The RNAV route listed in this document would be published subsequently in FAA Order JO 7400.11.

Availability and Summary of Documents for Incorporation by Reference

This document amends FAA Order JO 7400.11F, Airspace Designations and Reporting Points, dated August 10, 2021, and effective September 15, 2021. FAA Order JO 7400.11F is publicly available as listed in the **ADDRESSES** section of this document. FAA Order JO 7400.11F lists Class A, B, C, D, and E airspace areas, air traffic service routes, and reporting points.

The Rule

This action amends 14 CFR part 71 by amending RNAV route T–222 in the vicinity of Bethel, AK in support of a large and comprehensive T-route modernization project for the state of Alaska.

The route change is described below.

T–222: T–222 extends between the BAERE, AK, waypoint (WP) to the Fairbanks, AK, (FAI) VHF Omni-Directional Range and Tactical Air Navigation (VORTAC). This action reroutes the segment between the Bethel, AK, (BET) VORTAC and the UTICE, AK, WP by adding five additional WPs (CABOT, WOGAX, IKUFU, JILSI, and CYCAS) in the vicinity of Aniak, AK. Further, the RUFVY WP from the original legal description is removed due to it not being a turn point. Additionally, this action cancels the segment between the BAERE WP and the St Paul Island, AK, (SPY) Non-Directional Beacons/Distance Measuring Equipment (NDB/DME). As a result, T–222 extends between the St Paul Island, AK, (SPY) NDB/DME and the Fairbanks, AK, (FAI) VORTAC.

FAA Order JO 7400.11, Airspace Designations and Reporting Points, is published yearly and effective on September 15.

Regulatory Notices and Analyses

The FAA determined that this regulation only involves an established body of technical regulations for which frequent and routine amendments are necessary to keep them operationally current. It, therefore: (1) is not a ''significant regulatory action'' under Executive Order 12866; (2) is not a ''significant rule'' under Department of Transportation (DOT) Regulatory Policies and Procedures (44 FR 11034; February 26, 1979); and (3) does not warrant preparation of a regulatory evaluation as the anticipated impact is so minimal. Since this is a routine matter that only affects air traffic procedures and air navigation, it is certified that this rule, when promulgated, does not have a significant economic impact on a substantial number of small entities under the criteria of the Regulatory Flexibility Act.

Environmental Review

The FAA determined that this airspace action of amending RNAV route T–222 in the vicinity of Bethel, AK qualifies for categorical exclusion under the National Environmental Policy Act (42 U.S.C. 4321 *et seq.*) and its implementing regulations at 40 CFR part 1500, and in accordance with FAA Order 1050.1F, Environmental Impacts: Policies and Procedures, paragraph 5–6.5a, which categorically excludes from further environmental impact review rulemaking actions that designate or modify classes of airspace areas, airways, routes, and reporting points (see 14 CFR part 71, Designation of Class A, B, C, D, and E Airspace Areas; Air Traffic Service Routes; and Reporting Points), and paragraph 5–6.5i, which categorically excludes from further environmental review the establishment of new or revised air traffic control procedures conducted at 3,000 feet or more above ground level (AGL); procedures conducted below 3,000 feet AGL that do not cause traffic to be routinely routed over noise sensitive areas; modifications to currently approved procedures conducted below 3,000 feet AGL that do not significantly increase noise over noise sensitive areas; and increases in minimum altitudes and landing minima. As such, this action is not expected to result in any potentially significant environmental impacts. In accordance with FAA Order 1050.1F,

paragraph 5–2 regarding Extraordinary Circumstances, the FAA has reviewed this action for factors and circumstances in which a normally categorically excluded action may have a significant environmental impact requiring further analysis. Accordingly, the FAA has determined that no extraordinary circumstances exist that warrant preparation of an environmental assessment or environmental impact study.

List of Subjects in 14 CFR Part 71

Airspace, Incorporation by reference, Navigation (air).

The Amendment

In consideration of the foregoing, the Federal Aviation Administration amends 14 CFR part 71 as follows:

PART 71—DESIGNATION OF CLASS A, B, C, D, AND E AIRSPACE AREAS; AIR TRAFFIC SERVICE ROUTES; AND REPORTING POINTS

■ 1. The authority citation for part 71 continues to read as follows:

Authority: 49 U.S.C. 106(f), 106(g); 40103, 40113, 40120; E.O. 10854, 24 FR 9565, 3 CFR, 1959–1963 Comp., p. 389.

§ 71.1 [Amended]

■ 2. The incorporation by reference in 14 CFR 71.1 of FAA Order JO 7400.11F, Airspace Designations and Reporting Points, dated August 10, 2021, and effective September 15, 2021, is amended as follows:

Paragraph 6011 United States Area Navigation Routes.

* * * * *

T–222 St Paul Island, AK (SPY) to Fairbanks, AK (FAI) [Amended]

St Paul Island, AK (SPY)	NDB/DME	(Lat. 57°09′25.20″ N, long. 170°13′58.77″ W)
Bethel, AK (BET)	VORTAC	(Lat. 60°47′05.41″ N, long. 161°49′27.59″ W)
CABOT, AK	WP	(Lat. 61°12′01.32″ N, long. 160°45′20.93″ W)
WOGAX, AK	WP	(Lat. 61°29′41.04″ N, long. 160°06′19.41″ W)
IKUFU, AK	WP	(Lat. 61°40′34.53″ N, long. 159°52′35.43″ W)
JILSI, AK	WP	(Lat. 61°46′52.14″ N, long. 159°31′07.72″ W)
CYCAS, AK	WP	(Lat. 61°52′23.15″ N, long. 159°13′52.38″ W)
UTICE, AK	WP	(Lat. 62°18′35.36″ N, long. 157°37′56.78″ W)
McGrath, AK (MCG)	VORTAC	(Lat. 62°57′03.72″ N, long. 155°36′40.97″ W)
Nenana, AK (ENN)	VORTAC	(Lat. 64°35′24.04″ N, long. 149°04′22.34″ W)
Fairbanks, AK (FAI)	VORTAC	(Lat. 64°48′00.25″ N, long. 148°00′43.11″ W)

* * * * *

Issued in Washington, DC, on June 22, 2022.

Scott M. Rosenbloom,

Manager, Airspace Rules and Regulations.

[FR Doc. 2022–13879 Filed 6–29–22; 8:45 am]

BILLING CODE 4910–13–P

DEPARTMENT OF TRANSPORTATION

Federal Aviation Administration

14 CFR Part 71

[Docket No. FAA–2022–0025; Airspace Docket No. 21–ACE–2]

RIN 2120–AA66

Amendment of Multiple Air Traffic Service (ATS) Routes and Establishment of Area Navigation (RNAV) Routes in the Vicinity of Liberal, KS

AGENCY: Federal Aviation Administration (FAA), DOT.

ACTION: Final rule.

SUMMARY: This action amends Jet Routes J–19, J–20, J–52, J–98, J–134, and J–231, RNAV route Q–176, and VHF Omnidirectional Range (VOR) Federal airways V–210, V–234, V–350, and V–507; and establishes RNAV routes T–418 and T–431. The FAA is taking this action due to the planned decommissioning of the VOR portion of the Liberal, KS (LBL), VOR/Tactical Air Navigation (VORTAC) navigational aid (NAVAID). The Liberal VOR is being decommissioned in support of the FAA's VOR Minimum Operational Network (MON) program.

DATES: Effective date 0901 UTC, September 8, 2022. The Director of the Federal Register approves this incorporation by reference action under 1 CFR part 51, subject to the annual revision of FAA Order JO 7400.11 and publication of conforming amendments.

ADDRESSES: FAA Order JO 7400.11F, Airspace Designations and Reporting Points, and subsequent amendments can be viewed online at *https://www.faa.gov/air_traffic/publications/*. For further information, you can contact the Rules and Regulations Group, Federal Aviation Administration, 800 Independence Avenue SW, Washington, DC 20591; telephone: (202) 267–8783.

FOR FURTHER INFORMATION CONTACT: Colby Abbott, Rules and Regulations Group, Policy Directorate, Federal Aviation Administration, 800 Independence Avenue SW, Washington, DC 20591; telephone: (202) 267–8783.

SUPPLEMENTARY INFORMATION:

Authority for This Rulemaking

The FAA's authority to issue rules regarding aviation safety is found in Title 49 of the United States Code. Subtitle I, Section 106 describes the authority of the FAA Administrator. Subtitle VII, Aviation Programs, describes in more detail the scope of the agency's authority. This rulemaking is promulgated under the authority described in Subtitle VII, Part A, Subpart I, Section 40103. Under that section, the FAA is charged with prescribing regulations to assign the use of the airspace necessary to ensure the safety of aircraft and the efficient use of airspace. This regulation is within the scope of that authority as it modifies the route structure as necessary to preserve the safe and efficient flow of air traffic within the National Airspace System.

History

The FAA published a notice of proposed rulemaking (NPRM) for Docket No. FAA–2022–0025 in the **Federal Register** (87 FR 5747; February 2, 2022), amending Jet Routes J–19, J–20, J–52, J–98, J–134, and J–231, RNAV route Q–176, and VOR Federal airways V–210, V–234, V–304, V–350, and V–507; and establishing RNAV routes T–418 and T–431. The proposed amendment and establishment actions were due to the planned decommissioning of the VOR portion of the Liberal, KS, VORTAC NAVAID. Interested parties were invited to participate in this rulemaking effort by submitting written comments on the proposal. No comments were received.

Jet Routes are published in paragraph 2004, RNAV Q-routes are published in paragraph 2006, VOR Federal airways are published in paragraph 6010(a), and United States RNAV T-routes are published in paragraph 6011 of FAA Order JO 7400.11F, dated August 10, 2021, and effective September 15, 2021, which is incorporated by reference in 14 CFR 71.1. The ATS routes listed in this

document will be published subsequently in FAA Order JO 7400.11.

Differences From the NPRM

In the NPRM, the FAA proposed to amend V–304 by removing the airway segment overlying the Liberal VORTAC between the Borger, TX, VORTAC and the Lamar, CO, VOR/Distance Measuring Equipment (VOR/DME) NAVAIDs. Subsequent to the NPRM, the FAA published a rule for Docket No. FAA–2021–0821 in the **Federal Register** (87 FR 26985; May 6, 2022) removing V–304 in its entirety. The V–304 airway removal was effective July 14, 2022, and consequently removed from this docket.

Also, the NPRM proposed to establish T–431 between two new waypoints (WPs); the KENTO, NM, WP and the RREDD, KS, WP. However, the RREDD WP name had been reserved for use elsewhere within the NAS prior to being used for T–431 and required the WP name to be changed. As a result, the proposed T–431 route point named RREDD, KS, WP is being renamed the KNSAS, KS, WP. The latitude/longitude coordinates of the KNSAS WP remain the same as those used for the RREDD WP in the proposed T–431 route description, therefore this WP name change does not affect the proposed charted alignment of T–431. The RREDD, KS, WP name listed in the proposed T–431 description is changed to the KNSAS, KS, WP in this action.

Availability and Summary of Documents for Incorporation by Reference

This document amends FAA Order JO 7400.11F, Airspace Designations and Reporting Points, dated August 10, 2021, and effective September 15, 2021. FAA Order JO 7400.11F is publicly available as listed in the **ADDRESSES** section of this document. FAA Order JO 7400.11F lists Class A, B, C, D, and E airspace areas, air traffic service routes, and reporting points.

The Rule

This action amends 14 CFR part 71 by amending Jet Routes J–19, J–20, J–52, J–98, J–134, and J–231, RNAV route Q–176, and VOR Federal airways V–210, V–234, V–350, and V–507; and establishing RNAV routes T–418 and T–431. These amendment and establishment actions are due to the planned decommissioning of the VOR portion of the Liberal, KS, VORTAC. The ATS route actions are described below.

J–19: J–19 extends between the Phoenix, AZ, VORTAC and the Northbrook, IL, VOR/DME. The route segment between the Phoenix, AZ, VORTAC and the Zuni, NM, VORTAC is removed as it overlaps J–244, which remains. The route segment between the Zuni, NM, VORTAC and the Fort Union, NM, VORTAC is removed since J–244 provides a shorter, more efficient routing between the two NAVAIDs. The route segment between the Fort Union, NM, VORTAC and the Wichita, KS, VORTAC is removed due to the planned Liberal VOR decommissioning. Finally, the route segment between the Wichita, KS, VORTAC and the St. Louis, MO, VORTAC is removed as it overlaps J–134 completely and J–110 between the Butler, MO, VORTAC and St. Louis, MO, VORTAC. Collectively, the route segments between the Phoenix, AZ, VORTAC and the St. Louis, MO, VORTAC are removed. The unaffected portions of the existing route remain as charted.

J–20: J–20 extends between the Seattle, WA, VORTAC and the Montgomery, AL, VORTAC. The route segment overlying the Liberal VORTAC between the Lamar, CO, VOR/DME and the Will Rogers, OK, VORTAC is removed. The unaffected portions of the existing route remain as charted.

J–52: J–52 extends between the Vancouver, BC, Canada VOR/DME and the Vulcan, AL, VORTAC; and between the intersection of the Columbia, SC, VORTAC 042° and Flat Rock, VA, VORTAC 212° radials (TUBAS fix) and the Richmond, VA, VORTAC. The portion within Canada is excluded. The route segment overlying the Liberal VORTAC between the Lamar, CO, VOR/DME and the Ardmore, OK, VORTAC is removed. The unaffected portions of the existing route remain as charted.

J–98: J–98 extends between the Liberal, KS, VORTAC and the Farmington, MO, VORTAC. The route segment overlying the Liberal VORTAC between the Liberal, KS, VORTAC and the Mitbee, OK, VORTAC is removed. The unaffected portions of the existing route remain as charted.

J–134: J–134 extends between the Los Angeles, CA, VORTAC and the Falmouth, KY, VOR/DME. The route segment overlying the Liberal VORTAC between the Cimarron, NM, VORTAC and the Wichita, KS, VORTAC is removed. The unaffected portions of the existing route remain as charted.

J–231: J–231 extends between the Twentynine Palms, CA, VORTAC and the Liberal, KS, VORTAC. The route segment overlying the Liberal VORTAC between the Anton Chico, NM, VORTAC and Liberal, KS, VORTAC is removed. The unaffected portions of the existing route remain as charted.

Q–176: Q–176 extends between the Cimarron, NM, VORTAC and the OTTTO, VA, WP. The Liberal, KS, VORTAC and the Wichita, KS, VORTAC route points are replaced with the TOTOE, KS, WP and the WRIGL, KS, WP, respectively. The two new WPs are established in the immediate vicinity of the NAVAIDs they replace. Additionally, the GBEES, IN, route point is changed from ''FIX'' to ''WP'' to match the FAA's aeronautical database information and charted depiction. The unaffected portions of the existing route remain as charted.

V–210: V–210 extends between the Los Angeles, CA, VORTAC and the Okmulgee, OK, VOR/DME; between the Brickyard, IN, VORTAC and the Rosewood, OH, VORTAC; and between the Revloc, PA, VOR/DME and the Yardley, PA, VOR/DME. The airway segment overlying the Liberal VORTAC between the Lamar, CO, VOR/DME and the Will Rogers, OK, VORTAC is removed. The unaffected portions of the existing airway remain as charted.

V–234: V–234 extends between the St. Johns, AZ, VORTAC and the Centralia, IL, VORTAC. The airspace at and above 8,000 feet MSL between the Vichy, MO, VOR/DME and the intersection of the Vichy, MO, VOR/DME 091° and St. Louis, MO, VORTAC 171° radials is excluded when the Meramec Military Operations Area (MOA) is activated by NOTAM. The airway segment overlying the Liberal VORTAC between the Dalhart, TX, VORTAC and the Hutchinson, KS, VOR/DME is removed. Additionally, the Meramec MOA no longer exists; therefore, the exclusion language in the airway description is also removed. The unaffected portions of the existing airway remain as charted.

V–350: V–350 extends between the Liberal, KS, VORTAC and the Chanute, KS, VORTAC. The airspace at and above 6,000 feet MSL from 8 NM to 54 NM west of the Chanute VOR is excluded when the Eureka High MOA is activated. The airway segment overlying the Liberal VORTAC between the Liberal, KS, VORTAC and the Wichita, KS, VORTAC is removed. The unaffected portions of the existing airway remain as charted.

V–507: V–507 extends between the Ardmore, OK, VORTAC and the Garden City, KS, VORTAC. The airway segment overlying the Liberal VORTAC between the Mitbee, OK, VORTAC and the Garden City, KS, VORTAC is removed. The unaffected portions of the existing airway remain as charted.

T–418: T–418 is a new RNAV route extending between the Lamar, CO, VOR/DME and the Mitbee, OK, VORTAC. This T-route mitigates the removal of the V–210 airway segment between the Lamar, CO, VOR/DME and Liberal, KS,

VORTAC and the removal of the V–507 airway segment between the Liberal, KS, VORTAC and Mitbee, OK, VORTAC. Additionally, this new T-route provides RNAV routing capability from the Lamar, CO, area, southeastward to the Gage, OK, area.

T–431: T–431 is a new RNAV route extending between two new WPs being established; the KENTO, NM, WP and the KNSAS, KS, WP. This T-route provides non-radar routing from northeastern New Mexico eastward to the Liberal, KS, VORTAC area to address frequent radar outages and support the general aviation community in the area, as well as RNAV routing between the Liberal, KS, VORTAC area and the Mankato, KS, VORTAC area. Additionally, this new T-route provides RNAV routing capability from northeastern New Mexico northeastward to the Mankato, KS, area.

All NAVAID radials listed in the ATS route descriptions below are unchanged and stated in True degrees.

FAA Order JO 7400.11, Airspace Designations and Reporting Points, is published yearly and effective on September 15.

Regulatory Notices and Analyses

The FAA has determined that this regulation only involves an established body of technical regulations for which frequent and routine amendments are necessary to keep them operationally current. It, therefore: (1) is not a ''significant regulatory action'' under Executive Order 12866; (2) is not a ''significant rule'' under Department of Transportation (DOT) Regulatory Policies and Procedures (44 FR 11034; February 26, 1979); and (3) does not warrant preparation of a regulatory evaluation as the anticipated impact is so minimal. Since this is a routine matter that will only affect air traffic procedures and air navigation, it is certified that this rule, when promulgated, will not have a significant economic impact on a substantial number of small entities under the criteria of the Regulatory Flexibility Act.

Environmental Review

The FAA has determined that this action of amending Jet Routes J–19, J–20, J–52, J–98, J–134, and J–231, RNAV route Q–176, and VOR Federal airways V–210, V–234, V–350, and V–507; and establishing RNAV routes T–418 and T–431, due to the planned decommissioning of the Liberal, KS, VOR NAVAID, qualifies for categorical exclusion under the National Environmental Policy Act (42 U.S.C. 4321 *et seq.*) and its implementing regulations at 40 CFR part 1500, and in accordance with FAA Order 1050.1F, Environmental Impacts: Policies and Procedures, paragraph 5–6.5a, which categorically excludes from further environmental impact review rulemaking actions that designate or modify classes of airspace areas, airways, routes, and reporting points (see 14 CFR part 71, Designation of Class A, B, C, D, and E Airspace Areas; Air Traffic Service Routes; and Reporting Points). As such, this action is not expected to result in any potentially significant environmental impacts. In accordance with FAA Order 1050.1F, paragraph 5–2 regarding Extraordinary Circumstances, the FAA has reviewed this action for factors and circumstances in which a normally categorically excluded action may have a significant environmental impact requiring further analysis. The FAA has determined that no extraordinary circumstances exist that warrant preparation of an environmental assessment or environmental impact study.

List of Subjects in 14 CFR Part 71

Airspace, Incorporation by reference, Navigation (air).

The Amendment

In consideration of the foregoing, the Federal Aviation Administration amends 14 CFR part 71 as follows:

PART 71—DESIGNATION OF CLASS A, B, C, D, AND E AIRSPACE AREAS; AIR TRAFFIC SERVICE ROUTES; AND REPORTING POINTS

■ 1. The authority citation for 14 CFR part 71 continues to read as follows:

Authority: 49 U.S.C. 106(f), 106(g); 40103, 40113, 40120; E.O. 10854, 24 FR 9565, 3 CFR, 1959–1963 Comp., p. 389.

§ 71.1 [Amended]

■ 2. The incorporation by reference in 14 CFR 71.1 of FAA Order JO 7400.11F, Airspace Designations and Reporting Points, dated August 10, 2021, and effective September 15, 2021, is amended as follows:

Paragraph 2004 Jet Routes.

* * * * *

J–19 [Amended]

From St. Louis, MO; Roberts, IL; to Northbrook, IL.

J–20 [Amended]

From Seattle, WA; Yakima, WA; Pendleton, OR; Donnelly, ID; Pocatello, ID; Rock Springs, WY; Falcon, CO; Hugo, CO; to Lamar, CO. From Will Rogers, OK; Belcher, LA; Magnolia, MS; Meridian, MS; to Montgomery, AL.

* * * * *

J–52 [Amended]

From Vancouver, BC, Canada; Spokane, WA; Salmon, ID; Dubois, ID; Rock Springs, WY; Falcon, CO; Hugo, CO; to Lamar, CO. From Ardmore, OK; Texarkana, AR; Sidon, MS; Bigbee, MS; to Vulcan, AL. From INT Columbia, SC, 042° and Flat Rock, VA, 212° radials; Raleigh-Durham, NC; to Richmond, VA. The portion within Canada is excluded.

* * * * *

J–98 [Amended]

From Mitbee, OK; Will Rogers, OK; Tulsa, OK; Springfield, MO; to Farmington, MO.

* * * * *

J–134 [Amended]

From Los Angeles, CA; Seal Beach, CA; Thermal, CA; Parker, CA; Drake, AZ; Gallup, NM; to Cimarron, NM. From Wichita, KS; Butler, MO; St Louis, MO; to Falmouth, KY.

* * * * *

J–231 [Amended]

From Twentynine Palms, CA; INT Twentynine Palms 075° and Drake, AZ, 262° radials; Drake; INT Drake 111° and St. Johns, AZ, 268° radials; St. Johns; to Anton Chico, NM.

* * * * *

2006 United States Area Navigation Routes.

* * * * *

Q–176 Cimarron, NM (CIM) to OTTTO, VA [Amended]

Cimarron, NM (CIM)	VORTAC	(Lat. 36°29′29.03″ N, long. 104°52′19.20″ W)
KENTO, NM	WP	(Lat. 36°44′19.10″ N, long. 103°05′57.13″ W)
TOTOE, KS	WP	(Lat. 37°02′40.21″ N, long. 100°58′16.87″ W)
WRIGL, KS	WP	(Lat. 37°44′42.79″ N, long. 097°35′02.52″ W)
Butler, MO (BUM)	VORTAC	(Lat. 38°16′19.49″ N, long. 094°29′17.74″ W)
St Louis, MO (STL)	VORTAC	(Lat. 38°51′38.48″ N, long. 090°28′56.52″ W)
GBEES, IN	WP	(Lat. 38°41′54.72″ N, long. 085°10′13.03″ W)
BICKS, KY	WP	(Lat. 38°38′29.92″ N, long. 084°25′20.82″ W)
Henderson,	WV (HNN) DME	(Lat. 38°45′14.85″ N, long. 082°01′34.20″ W)
OTTTO, VA	WP	(Lat. 38°51′15.81″ N, long. 078°12′20.01″ W)

* * * * *

Paragraph 6010(a) Domestic VOR Federal Airways.

* * * * *

V–210 [Amended]

From Los Angeles, CA; INT Los Angeles 083° and Pomona, CA, 240° radials; Pomona; INT Daggett, CA, 229° and Hector, CA, 263° radials; Hector; Goffs, CA; 13 miles, 23 miles 71 MSL, 85 MSL Peach Springs, AZ; Grand Canyon, AZ; Tuba City, AZ; 10 miles 90 MSL, 91 miles 105 MSL Rattlesnake, NM; Alamosa, CO; INT Alamosa 074° and Lamar, CO, 250° radials; 40 miles, 51 miles 65 MSL to Lamar. From Will Rogers, OK; INT Will Rogers 113° and Okmulgee, OK, 238° radials; to Okmulgee. From Brickyard, IN; Muncie, IN; to Rosewood, OH. From Revloc, PA; INT Revloc 096° and Harrisburg, PA, 285° radials; Harrisburg; Lancaster, PA; INT Lancaster 095° and Yardley, PA, 255° radials; to Yardley.

* * * * *

V–234 [Amended]

From St. Johns, AZ; INT St. Johns 085° and Albuquerque, NM, 229° radials; Albuquerque; INT Albuquerque 103° and Anton Chico, NM, 249° radials; Anton Chico; to Dalhart, TX. From Hutchinson, KS; Emporia, KS; Butler, MO; Vichy, MO; INT Vichy 091° and Centralia, IL, 253° radials; to Centralia.

* * * * *

V–350 [Amended]

From Wichita, KS; to Chanute, KS. The airspace at and above 6,000 feet MSL from 8 NM to 54 NM west of Chanute VOR is excluded during the time that the Eureka High MOA is activated.

* * * * *

V–507 [Amended]

From Ardmore, OK; Will Rogers, OK; INT Will Rogers 284° and Mitbee, OK, 152° radials; to Mitbee.

* * * * *

Paragraph 6011 United States Area Navigation Routes.

* * * * *

T–418 Lamar, CO (LAA) to Mitbee, OK (MMB) [New]

Lamar, CO (LAA)	VOR/DME	(Lat. 38°11′49.53″ N, long. 102°41′15.12″ W)
TOTOE, KS	WP	(Lat. 37°02′40.21″ N, long. 100°58′16.87″ W)
Mitbee, OK (MMB)	VORTAC	(Lat. 36°20′37.44″ N, long. 099°52′48.44″ W)

* * * * * * *

T–431 Kento, NM to KNSAS, KS [New]

KENTO, NM	WP	(Lat. 36°44′19.10″ N, long. 103°05′57.13″ W)
TOTOE, KS	WP	(Lat. 37°02′40.21″ N, long. 100°58′16.87″ W)
MOZEE, KS	WP	(Lat. 38°50′51.20″ N, long. 099°16′35.85″ W)
KNSAS, KS	WP	(Lat. 39°48′22.62″ N, long. 098°15′36.62″ W)

Issued in Washington, DC, on June 23, 2022.

Scott M. Rosenbloom,

Manager, Airspace Rules and Regulations.

[FR Doc. 2022–13844 Filed 6–29–22; 8:45 am]

BILLING CODE 4910–13–P

DEPARTMENT OF TRANSPORTATION

Federal Aviation Administration

14 CFR Part 71

[Docket No. FAA–2021–1189; Airspace Docket No. 21–AGL–40]

RIN 2120–AA66

Establishment of Area Navigation (RNAV) Route T–768; Northcentral United States

AGENCY: Federal Aviation Administration (FAA), DOT.

ACTION: Final rule.

SUMMARY: This action establishes area navigation (RNAV) route T–768 in the northcentral United States (U.S.). The new T–768 would compensate for the removal of VOR Federal airway V–242 due to the decommissioning of the Atikokan, Ontario (ON), Canada, Non-Directional Beacon (NDB) navigational aid (NAVAID) accomplished as part of NAV CANADA's Airspace Modernization Program. The new T–768 in U.S. airspace also connects to NAV CANADA's existing T–768 RNAV route and supports cross border connectivity. Additionally, the new route would expand the availability of RNAV routing in support of transitioning the National Airspace System (NAS) from ground-based to satellite-based navigation.

DATES: Effective date 0901 UTC, September 8, 2022. The Director of the Federal Register approves this incorporation by reference action under 1 CFR part 51, subject to the annual revision of FAA Order JO 7400.11 and publication of conforming amendments.

ADDRESSES: FAA Order JO 7400.11F, Airspace Designations and Reporting Points, and subsequent amendments can be viewed online at *https://www.faa.gov/air_traffic/publications/.* For further information, you can contact the Rules and Regulations Group, Federal Aviation Administration, 800 Independence Avenue SW, Washington, DC 20591; telephone: (202) 267–8783.

FOR FURTHER INFORMATION CONTACT: Colby Abbott, Rules and Regulations Group, Office of Policy, Federal Aviation Administration, 800 Independence Avenue SW, Washington, DC 20591; telephone: (202) 267–8783.

SUPPLEMENTARY INFORMATION:

Authority for This Rulemaking

The FAA's authority to issue rules regarding aviation safety is found in Title 49 of the United States Code. Subtitle I, Section 106 describes the authority of the FAA Administrator. Subtitle VII, Aviation Programs, describes in more detail the scope of the agency's authority. This rulemaking is promulgated under the authority described in Subtitle VII, Part A, Subpart I, Section 40103. Under that section, the FAA is charged with prescribing regulations to assign the use of the airspace necessary to ensure the safety of aircraft and the efficient use of airspace. This regulation is within the scope of that authority as it modifies the route structure as necessary to preserve the safe and efficient flow of air traffic within the National Airspace System.

History

The FAA published a notice of proposed rulemaking for Docket No. FAA–2021–1189 in the **Federal Register** (87 FR 2375; January 14, 2022), establishing RNAV route T–768 in the northcentral United States (U.S.). The proposed amendment was to compensate for the removal of VOR Federal airway V–242 due to the decommissioning of the Atikokan, Ontario (ON), Canada, NDB NAVAID accomplished as part of NAV CANADA's Airspace Modernization Program and to support cross border connectivity by connecting to NAV CANADA's T–768 route. Interested parties were invited to participate in this rulemaking effort by submitting written comments on the proposal. No comments were received.

Canadian RNAV T-routes are published in paragraph 6013 of FAA Order JO 7400.11F, dated August 10, 2021, and effective September 15, 2021, which is incorporated by reference in 14 CFR 71.1. The RNAV T-route listed in this document will be published subsequently in FAA Order JO 7400.11.

Availability and Summary of Documents for Incorporation by Reference

This document amends FAA Order JO 7400.11F, Airspace Designations and Reporting Points, dated August 10, 2021, and effective September 15, 2021. FAA Order JO 7400.11F is publicly available as listed in the **ADDRESSES** section of this document. FAA Order JO 7400.11F lists Class A, B, C, D, and E airspace areas, air traffic service routes, and reporting points.

The Rule

This action amends 14 CFR part 71 by establishing RNAV route T–768. The new T-route is described below.

T–768: T–768 is a new RNAV route extending between the International Falls, MN, VORTAC and the ARBBY, MN, waypoint (WP). This T-route provides routing between the International Falls VORTAC and the U.S./Canada border; connecting to NAV CANADA's existing T–768 within Canadian airspace.

FAA Order JO 7400.11, Airspace Designations and Reporting Points, is published yearly and effective on September 15.

Regulatory Notices and Analyses

The FAA has determined that this regulation only involves an established body of technical regulations for which frequent and routine amendments are necessary to keep them operationally current. It, therefore: (1) is not a ''significant regulatory action'' under Executive Order 12866; (2) is not a ''significant rule'' under Department of Transportation (DOT) Regulatory Policies and Procedures (44 FR 11034; February 26, 1979); and (3) does not warrant preparation of a regulatory evaluation as the anticipated impact is so minimal. Since this is a routine matter that will only affect air traffic procedures and air navigation, it is certified that this rule, when promulgated, will not have a significant economic impact on a substantial number of small entities under the criteria of the Regulatory Flexibility Act.

Environmental Review

The FAA has determined that this action of establishing T–768, to compensate for the removal of VOR Federal airway V–242 due to the Atikokan, ON, Canada, NDB being decommissioned and to provide cross border connectivity to NAV CANADA's T–768, qualifies for categorical exclusion under the National Environmental Policy Act (42 U.S.C. 4321 *et seq.*) and its implementing regulations at 40 CFR part 1500, and in accordance with FAA Order 1050.1F, Environmental Impacts: Policies and Procedures, paragraph 5–6.5a, which categorically excludes from further environmental impact review rulemaking actions that designate or modify classes of airspace areas, airways, routes, and reporting points (see 14 CFR part 71, Designation of Class A, B, C, D, and E Airspace Areas; Air Traffic Service Routes; and Reporting Points). As such, this action is not expected to result in any potentially significant environmental impacts. In accordance with FAA Order 1050.1F, paragraph 5–2 regarding Extraordinary Circumstances, the FAA has reviewed this action for factors and circumstances in which a normally categorically excluded action may have a significant environmental impact requiring further analysis. The FAA has determined that no extraordinary circumstances exist that warrant preparation of an environmental assessment or environmental impact study.

List of Subjects in 14 CFR Part 71

Airspace, Incorporation by reference, Navigation (air).

The Amendment

In consideration of the foregoing, the Federal Aviation Administration amends 14 CFR part 71 as follows:

PART 71—DESIGNATION OF CLASS A, B, C, D, AND E AIRSPACE AREAS; AIR TRAFFIC SERVICE ROUTES; AND REPORTING POINTS

■ 1. The authority citation for 14 CFR part 71 continues to read as follows:

Authority: 49 U.S.C. 106(f), 106(g); 40103, 40113, 40120; E.O. 10854, 24 FR 9565, 3 CFR, 1959–1963 Comp., p. 389.

§ 71.1 [Amended]

■ 2. The incorporation by reference in 14 CFR 71.1 of FAA Order JO 7400.11F, Airspace Designations and Reporting Points, dated August 10, 2021, and effective September 15, 2021, is amended as follows:

Paragraph 6013 Canadian Area Navigation Routes.

* * * * *

T–768 International Falls, MN (INL) to ARBBY, MN [New]

International Falls, MN, (INL)	VORTAC	(Lat. 48°33′56.87″ N, long. 093°24′20.44″ W)
ARBBY, MN	WP	(Lat. 48°37′29.35″ N, long. 093°00′31.59″ W)

* * * * *

Issued in Washington, DC, on June 23, 2022.

Scott M. Rosenbloom,

Manager, Airspace Rules and Regulations.

[FR Doc. 2022–13868 Filed 6–29–22; 8:45 am]

BILLING CODE 4910–13–P

DEPARTMENT OF COMMERCE

Bureau of Industry and Security

15 CFR Part 744

[Docket No. 220627–0141]

RIN 0694–AI88

Addition of Entities, Revision and Correction of Entries, and Removal of Entities From the Entity List

AGENCY: Bureau of Industry and Security, Department of Commerce.

ACTION: Final rule.

SUMMARY: In this rule, the Bureau of Industry and Security (BIS) amends the Export Administration Regulations (EAR) by adding 36 entities under 41 entries to the Entity List. These 36 entities have been determined by the U.S. Government to be acting contrary to the national security or foreign policy interests of the United States. These entities will be listed on the Entity List under the destinations of the People's Republic of China (China), Lithuania, Pakistan, the Russian Federation (Russia), Singapore, the United Arab Emirates (UAE), the United Kingdom, Uzbekistan, and Vietnam. Some entities are added under multiple entries, accounting for the difference in the total number of entities and entries in this rule. This rule also revises eleven existing entries under the destinations of Belarus, China, Russia, and Slovakia and corrects one existing entry on the Entity List under the destination of

Pakistan. Lastly, this rule removes two entities and one address for a non-listed entity, consisting of one removal of an entity and one removal of an address under the destination of China, and one removal under the destination of Pakistan. The removals from the Entity List are made in connection with requests for removal that BIS received pursuant to the EAR and a review of the information provided in those requests.

DATES: This rule is effective on June 28, 2022.

FOR FURTHER INFORMATION CONTACT: Chair, End-User Review Committee, Office of the Assistant Secretary for Export Administration, Bureau of Industry and Security, Department of Commerce, Phone: (202) 482–5991, Email: *ERC@bis.doc.gov.*

SUPPLEMENTARY INFORMATION:

Background

The Entity List (supplement no. 4 to part 744 of the EAR) identifies entities for which there is reasonable cause to believe, based on specific and articulable facts, that the entities have been involved, are involved, or pose a significant risk of being or becoming involved in activities contrary to the national security or foreign policy interests of the United States. The EAR (15 CFR parts 730–774) impose additional license requirements on and limit the availability of most license exceptions for exports, reexports, and transfers (in-country) to listed entities.

The license review policy for each listed entity is identified in the ''License Review Policy'' column on the Entity List, and the impact on the availability of license exceptions is described in the relevant **Federal Register** document that added the entity to the Entity List. Any license application for an export, reexport, or transfer (in-country) involving an entity on the Entity List that is subject to an additional EAR license requirement will also be reviewed in accordance with the license review policies in the sections of the EAR applicable to those license requirements. For example, for Russian entities on the Entity List, if the export, reexport, or transfer (in-country) is subject to a license requirement in § 746.6, 746.8 or 746.10, the license application will be reviewed in accordance with the license review policies in those sections (as applicable) in addition to the specified license review policy under the Entity List entry.

BIS places entities on the Entity List pursuant to part 744 (Control Policy: End-User and End-Use Based) and part 746 (Embargoes and Other Special Controls) of the EAR. Paragraphs (b)(1) through (5) of § 744.11 include an illustrative list of activities that could be contrary to the national security or foreign policy interests of the United States.

The End-User Review Committee (ERC), composed of representatives of the Departments of Commerce (Chair), State, Defense, Energy and, where appropriate, the Treasury, makes all decisions regarding additions to, removals from, or other modifications to the Entity List. The ERC makes all decisions to add an entry to the Entity List by majority vote and makes all decisions to remove or modify an entry by unanimous vote.

Entity List Decisions

A. Additions to the Entity List

The ERC determined to add the following six entities under ten entries to the Entity List on the basis of § 744.11(b) and under the destinations of China, Lithuania, Russia, the United Kingdom, Uzbekistan, and Vietnam: Connec Electronic Ltd. (added under China and the United Kingdom); King Pai Technology Co., Ltd. (added under China, Russia, and Vietnam); Sinno Electronics Co., Ltd. (added under China and Lithuania); Winninc Electronic (added under China); World Jetta (H.K.) Logistics Limited (added under China); and Promcomplektlogistic Private Company (added under Uzbekistan) for providing support to Russia's military and/or defense industrial base. Specifically, these entities have previously supplied items to Russian entities of concern before February 24, 2022 and continue to contract to supply Russian entity listed and sanctioned parties after Russia's further invasion of Ukraine. This activity is contrary to U.S. national security and foreign policy interests under § 744.11(b) of the EAR. These six entities and their identified subsidiaries are added to the Entity List with a license requirement for all items subject to the EAR. BIS will review license applications for items for these entities under a policy of denial apart from food and medicine designated as EAR99, which will be reviewed on a case-by-case basis. No license exceptions are available for exports, reexports, or transfers (in-country) to these entities.

The ERC determined to add the following twelve entities to the Entity List on the basis of § 744.11(b) under the destination of China: At One Electronics; Blueschip Company Limited; Chen Zhouqian; Chipwinone Electronics; Chuangxinda Electronics-Tech Co., Ltd.; Ehang International Trade Limited; Gaohui HK Electronics; ICSOSO Electronics Company Limited; Shenzhen Avanlane; Suntric Company Limited; Wayne Weipeng; and Yiru Zhuang for their activities contrary to the national security and foreign policy interests of the United States. Specifically, these entities use deceptive practices to supply or attempt to supply Iran with U.S-origin electronics that would ultimately provide support to Iran's military. These entities are added to the Entity List with a license requirement for all items subject to the EAR. BIS will review license applications for items for these entities under a presumption of denial. No license exceptions are available for exports, reexports, or transfers (in-country) to these entities.

The ERC determined to add eight entities under nine entries to the Entity List on the basis of § 744.11(b) under the destinations of China and Singapore, with one of the entities listed under both destinations. The entities are as follows: Beijing Highlander Digital Technology Co. Ltd (added under China and Singapore); China Academy of Science—Shenyang Institute of Automation; China State Shipbuilding Corp.—Systems Engineering Research Institute; CSSC Electronic Technology; Highlander (Hong Kong) Maritime Navigation Science and Technology LLC; Laurel Technologies Co. Ltd.; Sansha Highlander Marine Information Technology Co. Ltd.; and Sanya Highlander Huanyu Ocean Information Technology Corporation. All of the eight entities are added to the Entity List for acquiring and attempting to acquire U.S.-origin items in support of military applications, contrary to the national security or foreign policy interests of the United States. These entities are added to the Entity List with a license requirement for all items subject to the EAR. BIS will review license applications for items for these entities under a presumption of denial. No license exceptions are available for exports, reexports, or transfers (in-country) to these entities.

The ERC determined to add two entities to the Entity List on the basis of § 744.11(b) under the destination of Russia: Laboratory Systems and Technologies LTD; and Intertech Rus LLC. The two entities are added on the basis of their attempts to procure items, including U.S.-origin items, for activities contrary to the national security and foreign policy interests of the United States. Specifically, Intertech Rus LLC and Laboratory Systems and Technologies LTD are acting as agents, fronts or shell companies for OOO Intertech Instruments, an entity added

to the Entity List under the destination of Russia on March 4, 2021 (86 FR 12531). The two entities are added to the Entity List with a license requirement for all items subject to the EAR. BIS will review license applications for items for these entities under the license review policies specified in §§ 744.2(d) (restrictions on certain nuclear end-uses), 744.3(d) (restrictions on certain rocket systems and unmanned aerial vehicles end-uses), and 744.4(d) (restrictions on certain chemical and biological weapons end-uses) of the EAR. No license exceptions are available for exports, reexports, or transfers (in-country) to these entities.

The ERC determined to add two entities to the Entity List on the basis of § 744.11(b) under the destination of Russia: FASTAIR and Avcom-Technique. These two entities are added for actions contrary to the national security and foreign policy interests of the United States. These entities are added to the Entity List with a license requirement for all items subject to the EAR. BIS will review license applications for items for these entities under a case-by-case license review policy. No license exceptions are available for exports, reexports, or transfers (in-country) to these entities.

The ERC determined to add four entities to the Entity List on the basis of §§ 744.11(b), 744.2 and 744.3, including one entity under the destination of the United Arab Emirates (UAE): Gulf Trade House FZC; and three entities under the destination of Pakistan: Industrial Process Automation; Jim Corporation; and Maira Trade International. The four entities are added for actions contrary to the national security or foreign policy interests of the United States, and because these entities pose an unacceptable risk of using or diverting items subject to the EAR to certain nuclear end-uses and certain rocket systems and unmanned aerial vehicles end-uses. These entities are added to the Entity List with a license requirement for all items subject to the EAR. BIS will review license applications for items for these entities under a presumption of denial. No license exceptions are available for exports, reexports, or transfers (in-country) to these entities.

The ERC determined to add one entity to the Entity List on the basis of § 744.11(b) under the destination of the UAE: Al Noor Alaili Trading Company (ANATCO). This entity is added for preventing the accomplishment of an End Use Check (EUC) by precluding access to, refusing to provide information to, and/or providing false or misleading information about parties to the transaction or the item to be checked. This entity is added to the Entity List with a license requirement for all items subject to the EAR. BIS will review license applications for items for this entity under a presumption of denial. No license exceptions are available for exports, reexports, or transfers (in-country) to this entity.

The ERC determined to add the following one entity to the Entity List on the basis of § 744.11(b) under the destination of the UAE: Scott Technologies FZE, for acquiring and attempting to acquire U.S.-origin items on behalf of entities listed on the Entity List, in circumvention of the licensing requirements set forth in § 744.11 of the EAR. Specifically, the entity was added for re-exporting aircraft parts to Syria. This entity will be added to the Entity List with a license requirement for all items subject to the EAR. BIS will review license applications for items for this entity under a presumption of denial. No license exceptions are available for exports, reexports, or transfers (in-country) to this entity.

For the reasons described in section A of the Supplementary Information, this final rule adds the following entities under to the Entity List including, where appropriate, aliases:

China

- At One Electronics;
- Beijing Highlander Digital Technology Co. Ltd;
- Blueschip Company Limited;
- Chuangxinda Electronics-Tech Co.,
- Chen Zhouqian;
- China Academy of Science—Shenyang Institute of Automation;
- China State Shipbuilding Corp.—Systems Engineering Research Institute;
- Chipwinone Electronics Co., Limited;
- Connec Electronic Ltd.;
- CSSC Electronic Technology;
- Ehang International Trade Limited;
- Gaohui HK Electronics;
- Highlander (Hong Kong) Maritime Navigation Science and Technology LLC;
- ICSOSO Electronics Co. Ltd.;
- King Pai Technology Co., Ltd.;
- Laurel Technologies Co. Ltd.;
- Sansha Highlander Marine Information Technology Co. Ltd.;
- Sanya Highlander Huanyu Ocean Information Technology Corporation;
- Shenzhen Avanlane;
- Sinno Electronics Co., Ltd.;
- Suntric Company Limited;
- Wayne Weipeng;
- Winninc Electronic;
- World Jetta (H.K.) Logistics Limited; *and*
- Yiru Zhuang.

Lithuania

- Sinno Electronics.

Pakistan

- Industrial Process Automation;
- Jim Corporation; *and*
- Maira Trade International.

Russia

- Avcom-Technique;
- FASTAIR;
- Intertech Rus LLC;
- KingPai Technology Int'l Co., Limited; *and*
- Laboratory Systems and Technologies LTD.

Singapore

- Beijing Highlander Digital Technology Co., Ltd.

United Arab Emirates

- Al Noor Alaili Trading Company;
- Gulf Trade House FZC; *and*
- Scott Technologies FZE.

United Kingdom

- Connec Electronic.

Uzbekistan

- Promcomplektlogistic Private Company.

Vietnam

- KingPai Technology Int'l Co., Limited.

B. Revisions to the Entity List

This final rule revises eleven existing entries, under the destinations of Belarus, China, Russia, and Slovakia.

This rule revises nine entries, consisting of one entry for ''JSC Integral,'' first added to the Entity List under the destination of Belarus on March 2, 2022 (87 FR 13061, March 8, 2022); seven entries under Russia consisting of ''Avant-Space LLC,'' first added to the Entity List on March 3, 2022 (87 FR 13143, March 9, 2022)(the ''March 9 rule''); ''Elara,'' first added to the Entity List in the March 9 rule; ''JSC Central Research Institute of Machine Building,'' first added to the Entity List on February 24, 2022 (87 FR 12240, March 3, 2022) (the ''March 3 rule''); ''JSC Element,'' first added to the Entity List in the March 9 rule; ''JSC Rocket and Space Centre,'' first added to the Entity List in the March 3 rule; ''Russian Space Systems (RKS),'' first added to the Entity List in the March 9 rule; ''Scientific Research Institute NII Submikron,'' first added to the Entity List in the March 9 rule; and one entry for ''Incoff Aerospace, S.R.O.,'' first added to the Entity List under the destination of Slovakia in the March 9 rule. This rule revises the License

Requirement column for some of the nine entities to specify that License Exception GOV under § 740.11(b)(2) and (e) may be available for use to export items to these entities. This rule also revises the License Review Policy column for all nine entities to specify that there is a case-by-case license review policy for items destined for use in U.S. government supported use in the International Space Station (ISS).

These nine entities are integral to supporting the International Space Station (ISS), therefore the ERC determined it was warranted to allow the License Exception GOV authorizations under paragraphs (b)(2) and (e) to be available and to have a case-by-case license review policy for U.S. Government supported use in the International Space Station. This rule revises both the License Requirement column and License Review Policy column for JSC Central Research Institute of Machine Building. For the other eight entities revised by this rule, only one of the two columns needed to be revised. Specifically, this rule revises the License Requirement column for Incoff Aerospace LLC; JSC Element; and Russian Space Systems (RKS) and revises the License Review Policy Column for Avant-Space LLC; Elara; JSC Integral; JSC Rocket and Space Centre; and Scientific Research Institute NII Submikron.

This rule revises one existing entry for ''China National Offshore Oil Corporation Ltd.,'' first added to the Entity List under the destination of China on January 14, 2021 (85 FR 4864). Specifically, this rule removes the phrase ''not operating in the South China Sea'' and adds in its place the phrase ''not operating in any body of water, or the airspace above any body of water, within the following coordinates:

Upper Left:
26°4′48.931″ N
104°31′41.383″ E
Upper Right:
26°4′48.931″ N
123°19′22.225″ E
Lower Right:
0°0′0.00″ N
123°19′22.225″ E
Lower Left:
0°0′0.00″ N
104°31′41.383″ E

The following is an illustration with an approximate representation of these coordinates to assist the public in understanding the applicability of the license requirement for this entity:

BILLING CODE 3510–33–P

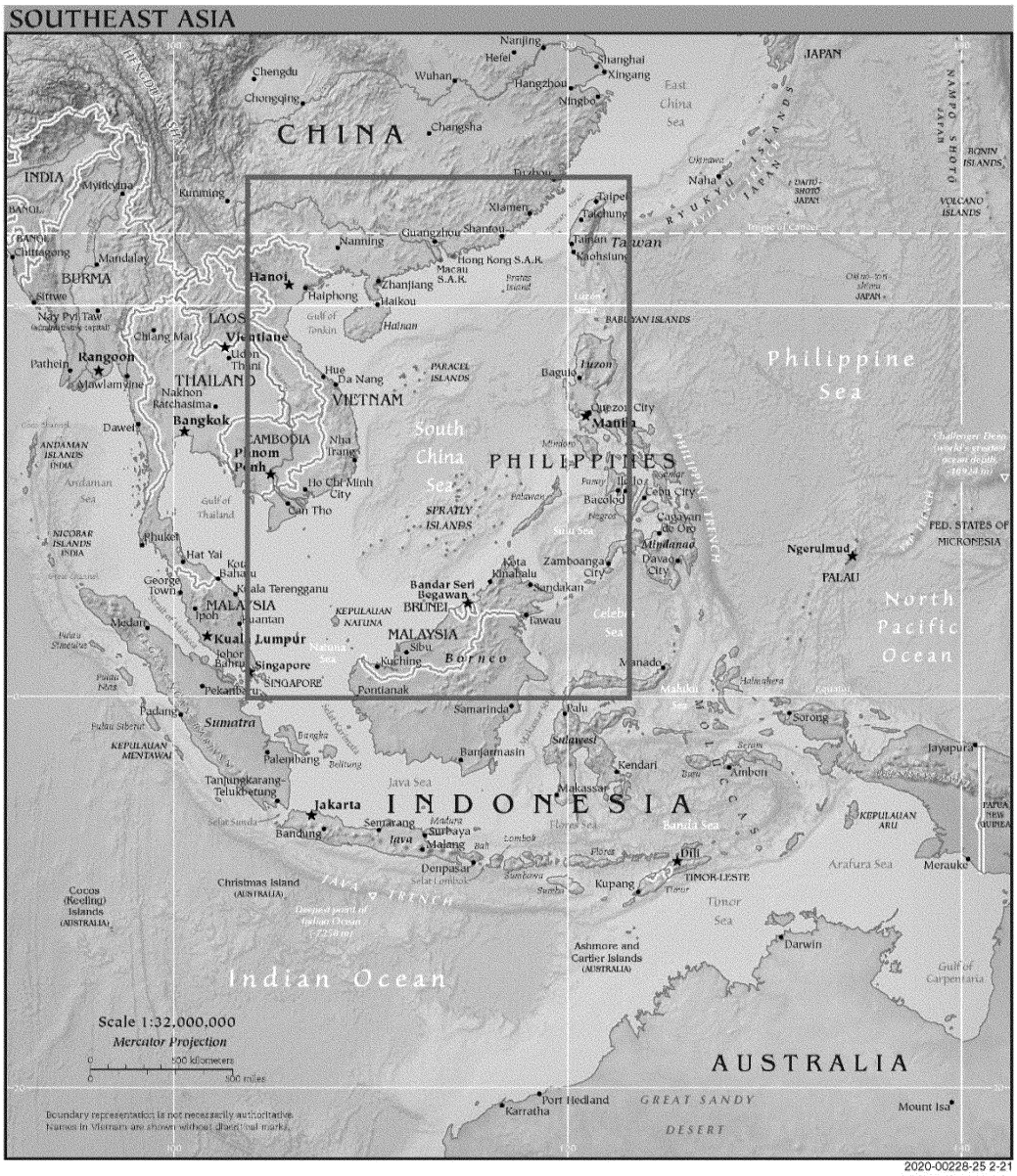

BILLING CODE 3510–33–C

BIS has received numerous questions from the public on how to interpret this limitation on the exclusion from the license requirement for this entry. After reviewing these questions and evaluating various options for clarifying the scope of this limitation, the ERC determined that the best approach to facilitate compliance, consistent with U.S. national security and foreign policy interests, is to use coordinates that form a geographic box such that any body of water (*e.g.,* the South China Sea, the Celebes Sea, the Sulu Sea) that falls within these coordinates, as well as the airspace above any such body of water, will be subject to the limitation on the exclusion from the license requirement. This modification provides greater clarity, thus reducing the compliance burden on the public.

In response to questions received about the entity name, BIS makes an additional revision to the entry to clarify that the entity listed on the Entity List is CNOOC Limited, which is a core subsidiary of China National Offshore Oil Corporation (CNOOC Group). While the parent entity, CNOOC Group, is not listed on the Entity List, BIS recommends that due diligence should be conducted by exporters, reexporters, and transferors when dealing with CNOOC Group to determine whether there is any ''knowledge,'' as it is defined in part 772 of the EAR, that an item subject to the EAR may be destined to CNOOC Limited or to any other entity listed on the Entity List. The rule also makes minor typographical corrections to clarify the regulatory text.

This rule also modifies the entry for the National University of Defense Technology (NUDT), which was first added to the Entity List under the destination of China on February 18, 2015 (80 FR 8527). This final rule adds three additional addresses and two additional aliases to the entry.

C. Correction to the Entity List

This final rule implements corrections to one existing entry on the Entity List. The correction is under the destination of Pakistan for the entity X-Cilent Engineering. This entity was added to the Entity List on February 14, 2022 (87 FR 8182). This final rule corrects the punctuation of this entity's address.

D. Removals From the Entity List

This rule implements decisions of the ERC to remove two entities and one address for a non-listed entity from the Entity List, as described below.

This rule implements a decision of the ERC to remove ''Nanchang O-Film Tech.'', an entity located in China, from the Entity List on the basis of a removal request. The entry for Nanchang O-Film Tech. under the destination of China was added to the Entity List on July 22, 2020 (85 FR 44166). The ERC decided to remove this one entity based on information BIS received pursuant to § 744.16(e) of the EAR and the review the ERC conducted in accordance with procedures described in supplement no. 5 to part 744 of the EAR.

This rule also implements a decision of the ERC to remove one address associated with Oriental Logistics Group LTD, specifically, 10/F, Union Bldg, 112 How Ming, Kwun Tong, Kowloon, Hong Kong from the Entity List, because this address does not belong to Oriental Logistics Group LTD. Rather, it belongs to Oriental Logistics Group Ltd., which has a similar name, but is a different legal entity and is not on the Entity List. The ERC determined that Oriental Logistics Group LTD is not located at this address, and therefore has decided to remove this address from the entry. Two entries for the entity Oriental Logistics Group LTD were added under the destinations of China and Hong Kong to the Entity List on September 22, 2020 (85 FR 59421). Subsequently, the entries under Hong Kong were relocated under the destination of China on the Entity List on December 23, 2020 (85 FR 83769) with the result that the entry for Oriental Logistics Group LTD contained three addresses: one in China and two in Hong Kong, China. This rule is removing the Hong Kong address referenced above; it is not removing the entry for Oriental Logistics Group LTD under China or the second Hong Kong address for Oriental Logistics Group LTD under this entry. The ERC decided to remove the one address based on information BIS received pursuant to § 744.16(e) of the EAR and the review the ERC conducted in accordance with procedures described in supplement no. 5 to part 744 of the EAR.

This rule implements a decision of the ERC to remove ''Mushko Electronics Pvt. Ltd.'', an entity located in Pakistan, from the Entity List on the basis of a removal request. The entry for Mushko Electronics Pvt. Ltd. was added to the Entity List on March 22, 2018 (83 FR 12480). The ERC decided to remove this one entity based on information BIS received pursuant to § 744.16(e) of the EAR and the review the ERC conducted in accordance with procedures described in supplement no. 5 to part 744 of the EAR.

This final rule implements the decision to remove the following two entities and one address for a non-listed entity, located in China, and Pakistan, from the Entity List:

China

- Nanchang O-Film Tech; *and*
- Oriental Logistics Group Ltd. (As described above, this entity is not on the Entity List, but its address is being removed from the Entity List in this rule to avoid any confusion regarding whether Oriental Logistics Group Ltd. is or is not on the Entity List.)

Pakistan

- Mushko Electronics Pvt. Ltd.

Savings Clause

For the changes being made in this final rule, shipments of items removed from eligibility for a License Exception or export, reexport, or transfer (in-country) without a license (NLR) as a result of this regulatory action that were en route aboard a carrier to a port of export, reexport, or transfer (in-country), on June 28, 2022, pursuant to actual orders for export, reexport, or transfer (in-country) to or within a foreign destination, may proceed to that destination under the previous eligibility for a License Exception or export, reexport, or transfer (in-country) without a license (NLR).

Export Control Reform Act of 2018

On August 13, 2018, the President signed into law the John S. McCain National Defense Authorization Act for Fiscal Year 2019, which included the Export Control Reform Act of 2018 (ECRA) (50 U.S.C. 4801–4852). ECRA provides the legal basis for BIS's principal authorities and serves as the authority under which BIS issues this rule.

Rulemaking Requirements

1. This rule has been determined to be not significant for purposes of Executive Order 12866.

2. Notwithstanding any other provision of law, no person is required to respond to or be subject to a penalty for failure to comply with a collection of information, subject to the requirements of the Paperwork Reduction Act of 1995 (44 U.S.C. 3501 *et seq.*) (PRA), unless that collection of information displays a currently valid Office of Management and Budget (OMB) Control Number. This regulation involves collections previously approved by OMB under control number 0694–0088, Simplified Network Application Processing System, which includes, among other things, license applications and commodity classifications, and carries a burden estimate of 29.6 minutes for a manual or electronic submission for a total burden estimate of 33,133 hours. Total burden hours associated with the PRA and OMB control number 0694–0088 are not expected to increase as a result of this rule.

3. This rule does not contain policies with federalism implications as that term is defined in Executive Order 13132.

4. Pursuant to section 1762 of the Export Control Reform Act of 2018, this action is exempt from the Administrative Procedure Act (5 U.S.C. 553) requirements for notice of proposed rulemaking, opportunity for public participation, and delay in effective date.

5. Because a notice of proposed rulemaking and an opportunity for public comment are not required to be given for this rule by 5 U.S.C. 553, or by any other law, the analytical requirements of the Regulatory Flexibility Act, 5 U.S.C. 601, *et seq.,* are not applicable. Accordingly, no regulatory flexibility analysis is required, and none has been prepared.

List of Subjects in 15 CFR Part 744

Exports, Reporting and recordkeeping requirements, Terrorism.

Accordingly, part 744 of the Export Administration Regulations (15 CFR parts 730–774) is amended as follows:

PART 744—CONTROL POLICY: END–USER AND END–USE BASED

■ 1. The authority citation for 15 CFR part 744 continues to read as follows:

Authority: 50 U.S.C. 4801–4852; 50 U.S.C. 4601 *et seq.;* 50 U.S.C. 1701 *et seq.;* 22 U.S.C. 3201 *et seq.;* 42 U.S.C. 2139a; 22 U.S.C. 7201 *et seq.;* 22 U.S.C. 7210; E.O. 12058, 43 FR 20947, 3 CFR, 1978 Comp., p. 179; E.O. 12851, 58 FR 33181, 3 CFR, 1993 Comp., p. 608; E.O. 12938, 59 FR 59099, 3 CFR, 1994 Comp., p. 950; E.O. 13026, 61 FR 58767, 3 CFR, 1996 Comp., p. 228; E.O. 13099, 63 FR 45167, 3 CFR, 1998 Comp., p. 208; E.O. 13222, 66 FR 44025, 3 CFR, 2001 Comp., p. 783; E.O. 13224, 66 FR 49079, 3 CFR, 2001 Comp., p. 786; Notice of September 15, 2021, 86 FR 52069 (September 17, 2021); Notice of November 10, 2021, 86 FR 62891 (November 12, 2021).

■ 2. Supplement No. 4 to part 744 is amended:

■ a. Under BELARUS by revising the entry for ''JSC Integral'';

■ b. Under CHINA:

■ i. By adding, in alphabetical order, entries for ''At One Electronics,'' ''Beijing Highlander Digital Technology Co. Ltd,'' ''Blueschip Company Limited,'' ''Chen Zhouqian,'' and ''China Academy of Science—Shenyang Institute of Automation'';
■ ii. By removing the entry for ''China National Offshore Oil Corporation Ltd.'';
■ iii. By adding, in alphabetical order, entries for ''China State Shipbuilding Corp.—Systems Engineering Research Institute,'' ''Chipwinone Electronics Co., Limited,'' ''Chuangxinda Electronics-Tech Co.,'' and ''CNOOC Limited,'' ''Connec Electronic Ltd.,'' ''CSSC Electronic Technology,'' ''Ehang International Trade Limited,'' ''Gaohui HK Electronics,'' ''Highlander (Hong Kong) Maritime Navigation Science and Technology LLC,'' and ''ICSOSO Electronics Co. Ltd.,'' ''King Pai Technology Co., Ltd.,'' and ''Laurel Technologies Co. Ltd.'';
■ iv. By revising the entries for ''National University of Defense Technology (NUDT)''; ''Oriental Logistics Group LTD,''
■ v. By removing the entry for ''Nanchang O-Film Tech''; and
■ vi. By adding, in alphabetical order, entries for ''Sansha Highlander Marine Information Technology Co. Ltd.,'' ''Sanya Highlander Huanyu Ocean Information Technology Corporation,'' ''Shenzhen Avanlane,'' ''Sinno Electronics Co., Ltd.,'' ''Suntric Company Limited,'' ''Wayne Weipeng,'' ''Winninc Electronic,'' ''World Jetta (H.K.) Logistics Limited'' and ''Yiru Zhuang'';
■ c. By adding in alphabetical order a heading for Lithuania and one entry for ''Sinno Electronics'';
■ d. Under PAKISTAN,
■ i. By adding, in alphabetical order, entries for ''Industrial Process Automation,'' ''Jim Corporation,'' and ''Maira Trade International'';
■ ii. By removing the entry for ''Mushko Electronics Pvt. Ltd.''; and
■ iii. By revising the entry for ''X-Cilent Engineering'';
■ e. Under RUSSIA,
■ i. By revising the entry for ''Avant-Space LLC'';
■ ii. By adding, in alphabetical order, entries for ''Avcom-Technique,'' ''FASTAIR,'' and ''Intertech Rus LLC'';
■ iii. By revising the entries for ''Elara'', ''JSC Central Research Institute of Machine Building,'' ''JSC Element,'' and ''JSC Rocket and Space Centre'';
■ iv. By adding, in alphabetical order, entries for ''KingPai Technology Int'l Co., Limited'' and ''Laboratory Systems and Technologies LTD''; and
■ v. By revising the entries for ''Russian Space Systems (RKS)'' and ''Scientific Research Institute NII Submikron'';
■ f. Under SINGAPORE by adding, in alphabetical order, an entry for ''Beijing Highlander Digital Technology Co., Ltd.'';
■ g. Under SLOVAKIA by revising the entry for ''Incoff Aerospace, S.R.O.'';
■ h. Under UNITED ARAB EMIRATES by adding, in alphabetical order, entries for ''Al Noor Alaili Trading Company'', ''Gulf Trade House FZC,'' and ''Scott Technologies FZE'';
■ i. Under UNITED KINGDOM by adding, in alphabetical order, an entry for ''Connec Electronic'';
■ j. By adding in alphabetical order a heading for Uzbekistan and one entry for ''Promcomplektlogistic Private Company''; and
■ k. Under VIETNAM by adding, in alphabetical order, an entry for ''KingPai Technology Int'l Co., Limited''.

The additions and revisions read as follows:

Supplement No. 4 to Part 744—Entity List

* * * * *

Country	Entity	License requirement	License review policy	Federal Register citation
*	* *	*	* *	*
BELARUS	* *	*	* *	*
	JSC Integral, a.k.a., the following two aliases: —OAO Integral; *and* —Joint-Stock Company Integral—Holding Managing Company. 121A, Kazintsa I.P. Str., Minsk, 220108, Belarus; *and* 12 Korzhenevskogo Str., Minsk, 220108, Belarus; *and* 137 Brestskaya Str., Pinsk, Brest region, 225710, Belarus.	All items subject to the EAR. (See §§ 734.9(g),[3] 746.8(a)(3), and 744.21(b) of the EAR). This license requirement may be overcome by License Exception GOV under § 740.11(b)(2) and (e).	Policy of denial for all items subject to the EAR apart from food and medicine designated as EAR99 and for U.S. Government supported use in the International Space Station (ISS), which will be reviewed on a case-by-case basis. See §§ 746.8(b) and 744.21(e).	87 FR 13061, 3/8/22. 87 FR 34136, 6/6/22. 87 FR [INSERT FR PAGE NUMBER] June 30, 2022.
	* *	*	* *	*
*	* *	*	* *	*
CHINA, PEOPLE'S REPUBLIC OF.	* *	*	* *	*
	At One Electronics, Unit 614, 6/F Block A, Po Lung Center, No. 11 Wang Chiu Road, Kowloon Bay, Kowloon, Hong Kong; *and* Rm. 311, 3/F, Genplas Industrial Building, 56 Hoi Yuen Rd., Kwun Tong, Kowloon, Hong Kong.	For all items subject to the EAR. (See § 744.11 of the EAR).	Presumption of Denial	87 FR [INSERT FR PAGE NUMBER] June 30, 2022.
	* *	*	* *	*
	Beijing Highlander Digital Technology Co. Ltd, Bldg. 10, No. 7 yard, Dijin Rd., Haidian District, Beijing, China; *and* C1902, SP Tower, Tsinghua Science Park, Haidian District, Beijing, China. (See alternate address under Singapore).	For all items subject to the EAR. (See § 744.11 of the EAR).	Presumption of Denial	87 FR [INSERT FR PAGE NUMBER] June 30, 2022.

Country	Entity	License requirement	License review policy	Federal Register citation
*	* *	*	* *	*
	Blueschip Company Limited, R1811 B Building, Jiahe Tower, No. 3006 Shennan Middle Road, Shenzhen, China 518031; *and* Room 06 Block A 23/F Hoover Ind Building, 26–38 Kwai Cheong Rd., Kwai Chung N.T., Hong Kong.	For all items subject to the EAR. (See § 744.11 of the EAR).	Presumption of Denial	87 FR [INSERT FR PAGE NUMBER] June 30, 2022.
*	* *	*	* *	*
	Chen Zhouqian, a.k.a., the following one alias: —Zhou Qian. Room 1811, B Bldg., Jiahe Tower, No. 3006 Shennan Middle Rd., Shenzhen, China; *and* Room 06 Blk A 23/F Hoover Ind. Bldg., 26–38 Kwai Cheong Rd., Kwai Chung N.T., Hong Kong; *and* Unit 614, 6/F., Blk. A, Po Lung Ctr., No.11 Wang Chiu Road, Kowloon Bay, Kowloon, Hong Kong; *and* Rm. 311, 3/F, Genplas Industrial Bldg., 56 Hoi Yuen Rd., Kwun Tong, Kowloon, Hong Kong; *and* No. 11 Wang Chiu Road Unit 614A 6F Po Lung Centre, Hong Kong.	For all items subject to the EAR. (See § 744.11 of the EAR).	Presumption of Denial	87 FR [INSERT FR PAGE NUMBER] June 30, 2022.
	* *	*	* *	*
	China Academy of Science—Shenyang Institute of Automation, No. 114 Nanta Street, Shenyang, Liaoning, China.	For all items subject to the EAR. (See § 744.11 of the EAR).	Presumption of Denial	87 FR [INSERT FR PAGE NUMBER] June 30, 2022.
	* *	*	* *	*
	China State Shipbuilding Corp.—Systems Engineering Research Institute, No. 16 Cuiwei Rd., Haidian Dist, Beijing 100036; *and* No. 5 Yuetan North St, Xicheng Dist, Beijing.	For all items subject to the EAR. (See § 744.11 of the EAR).	Presumption of Denial	87 FR [INSERT FR PAGE NUMBER] June 30, 2022.
	* *	*	* *	*
	Chipwinone Electronics Co., Limited, R1618, B Building, Jiahe Tower, No. 3006 Shennan Middle Road, Shenzhen, China.	For all items subject to the EAR. (See § 744.11 of the EAR).	Presumption of Denial	87 FR [INSERT FR PAGE NUMBER] June 30, 2022.
	* *	*	* *	*
	Chuangxinda Electronics-Tech Co., Ltd., a.k.a., the following two aliases: —CXDA; *and* —Chuangxinda Electronics Company Limited. R1811 B Building, Jiahe Tower, No. 3006 Shennan Middle Road, Shenzhen, China 518031; *and* Unit 614, 6/F., Block A, Po Lung Ctr, No. 11 Wang Chiu Road, Kowloon Bay, Kowloon, Hong Kong; *and* Rm. 311, 3/F, Genplas Industrial Building 56 Hoi Yuen Road, Kwun Tong, Kowloon, Hong Kong; *and* No. 11 Wang Chiu Road Unit 614A 6F Po Lung Centre, Hong Kong.	For all items subject to the EAR. (See § 744.11 of the EAR).	Presumption of Denial	87 FR [INSERT FR PAGE NUMBER] June 30, 2022.
	* *	*	* *	*

Country	Entity	License requirement	License review policy	Federal Register citation
	CNOOC Limited (a subsidiary of China National Offshore Oil Corporation), No. 25 Chaoyangmen North Street, Dongcheng District, Beijing, 100010, China; and 65th Floor, Bank of China Tower, 1 Garden Road, Hong Kong.	All items subject to the EAR except for: —crude oil, condensates, aromatics, natural gas liquids, hydrocarbon gas liquids, natural gas plant liquids, refined petroleum products, liquefied natural gas, natural gas, synthetic natural gas, and compressed natural gas under the following Harmonized System (HS) codes: 271111, 2711210000, 2711210000, 2709, 2709002010, 2707, 27075000, 2710, 271019, 271112, 271113, 271114, 271119, 27111990, 271311, 271312, 271012250, 2901, 290511, 2701, 29109020, 29151310, 29155020, 29156050, 29159020, 29161210, 29280025, 29321910, 29362920, 29419030, 2909300000, 2917194500, 2922504500, 2924296000, 2925294500, 2928002500, 2933194350; *or* —items required for the continued operation of joint ventures with persons from countries in Country Group A:1 in supplement no. 1 to part 740 of the EAR not operating in any body of water, or the airspace above any body of water, within the following coordinates: Upper Left: 26°4′48.931″ N 104°31′41.383″ E Upper Right: 26°4′48.931″ N 123°19′22.225″ E Lower Right: 0°0′0.00″ N 123°19′22.225″ E Lower Left: 0°0′0.00″ N 104°31′41.383″ E	Presumption of denial	86 FR 4864, 1/14/21. 87 FR [INSERT FR PAGE NUMBER] June 30, 2022.
	* *	*	* *	*
	Connec Electronic Ltd., a.k.a., the following two aliases: —Suzhou Konecot Electronics; *and* —Suzhou Ke Nai Ke Te Dianzi Youxian Gongsi. Room 1110, No 168, Fenjiang Road, Mudu Town, Wuzhong District, Suzhou City, China; *and* 5015 East Shennan Rd., Shenzhen, China; *and* 10/F., Flat U Valiant Industrial Centre, 2 to 12 Au Pui Wan Street, Hong Kong. (See alternate addresses under United Kingdom).	For all items subject to the EAR. (See § 744.11 of the EAR).	Policy of Denial for all items subject to the EAR apart from food and medicine designated as EAR99, which will be reviewed on a case-by-case basis.	87 FR [INSERT FR PAGE NUMBER] June 30, 2022.
	* *	*	* *	*
	CSSC Electronic Technology, 40 South Fangcun Main Rd., Liwan District, Guangzhou, China.	For all items subject to the EAR. (See § 744.11 of the EAR).	Presumption of Denial	87 FR [INSERT FR PAGE NUMBER] June 30, 2022.
	* *	*	* *	*
	Ehang International Trade Limited, Flat/Room 32, 11/F Lee Ka Industrial Building 8NK Fong Street San Po Kong, Kowloon, Hong Kong.	For all items subject to the EAR. (See § 744.11 of the EAR).	Presumption of Denial	87 FR [INSERT FR PAGE NUMBER] June 30, 2022.
	* *	*	* *	*

Country	Entity	License requirement	License review policy	Federal Register citation
	Gaohui HK Electronics, Room 1608, B Building, Jiahe Tower, No. 3006 Shennan Middle Road, Shenzhen, China 518031; *and* Rm. 311, 3/F, Genplas Industrial Building, 56 Hoi Yuen Road, Kwun Tong, Kowloon, Hong Kong; *and* Flat/Room 33 8/F, Sino Industrial Place 9 Kai Cheung Road, Kowloon, Hong Kong.	For all items subject to the EAR. (See § 744.11 of the EAR).	Presumption of Denial	87 FR [INSERT FR PAGE NUMBER] June 30, 2022.
	* *	*	* *	*
	Highlander (Hong Kong) Maritime Navigation Science and Technology LLC, a.k.a., the following one alias: —Highlandson (Hong Kong) Navigation Technology Co. Ltd. 48 Des Voeux Rd. Central, Hong Kong.	For all items subject to the EAR. (See § 744.11 of the EAR).	Presumption of Denial	87 FR [INSERT FR PAGE NUMBER] June 30, 2022.
	* *	*	* *	*
	ICSOSO Electronics Co. Ltd., a.k.a., the following one alias: —IC Soso Electronics Co. Ltd. Unit 614, 6/F, Block A, Po Lung Ctr, 11 Wang Chiu Road, Kowloon, Hong Kong; *and* Rm. 311, 3/F, Genplas Industrial Bldg., 56 Hoi Yuen Road, Kwun Tong, Kowloon, Hong Kong.	For all items subject to the EAR. (See § 744.11 of the EAR).	Presumption of Denial	87 FR [INSERT FR PAGE NUMBER] June 30, 2022.
	* *	*	* *	*
	King Pai Technology Co., Ltd., a.k.a., the following four aliases: —King-Pai Technology (HK) Co., Limited; —KingPai Technology Int'l Co., Limited; —KingPai Technology Group Co., Limited; *and* —Jinpai Technology (Hong Kong) Co., Ltd. No 13 4/F., Flourish Industrial Building, No. 33 Sheung Yee Road, Kowloon Bay, Kowloon, Hong Kong; *and* 1488E, Block A, Shenfang Building, Huaqiang North Road, Futian District, Shenzhen, China; *and* Room 804, Block A, Shenfang Building, Huaqiang North Road, Futian District, Shenzhen, China; *and* Room 1508, Block A, Shenfang Building, Huaqiang North Road, Futian District, Shenzhen, China; *and* Room 1509, Block A, Shenfang Building, Huaqiang North Road, Futian District, Shenzhen, China; *and* Room 1805, Poly Tianyue Center, 332 Gaoxin Guanshan Avenue, East Lake, Wuhan, China; *and* 908 International Finance Building, No 633, Keji 2nd Street, Songbei District, Harbin, Heilongjiang, China. (See alternate addresses under Russia and Vietnam).	For all items subject to the EAR. (See § 744.11 of the EAR).	Policy of Denial for all items subject to the EAR apart from food and medicine designated as EAR99, which will be reviewed on a case-by-case basis.	87 FR [INSERT FR PAGE NUMBER] June 30, 2022.
	* *	*	* *	*
	Laurel Technologies Co. Ltd., a.k.a., the following one alias: —Laurel Industrial Co. Suite 1807–1810, KunTai International Mansion, No. 12 B, Chaowai St., Beijing, 100020, China.	For all items subject to the EAR. (See § 744.11 of the EAR).	Presumption of Denial	87 FR [INSERT FR PAGE NUMBER] June 30, 2022.
	* *	*	* *	*
	National University of Defense Technology (NUDT), a.k.a., the following three aliases: —Central South CAD Center; —CSCC; *and* —Hunan Guofang Keji University. Garden Road (Metro West), Changsha City, Kaifu District, Hunan Province, China; *and* 109 Deya Road, Kaifu District, Changsha City, Hunan Province, China; *and* 47 Deya Road, Kaifu District, Changsha City, Hunan Province, China; *and* 147 Deya Road, Kaifu District, Changsha City, Hunan Province, China; *and* 47 Yanwachi, Kaifu District, Changsha, Hunan, China; *and* Wonderful Plaza, Sanyi Avenue, Kaifu District, Changsha, China; *and* No. 54 Beiya Road, Changsha, China; *and* No. 54 Deya Road, Changsha, China.	For all items subject to the EAR. (See § 744.11 of the EAR).	Presumption of denial	80 FR 8527, 2/18/15. 84 FR 29373, 6/24/19, 87 FR [INSERT FR PAGE NUMBER] June 30, 2022.
	* *	*	* *	*

Country	Entity	License requirement	License review policy	Federal Register citation
	Oriental Logistics Group LTD, a.k.a., the following one alias: —Oriental Air Transport Service Ltd. Room 2114, 21/F., Shenhua Commercial, Bldg., No. 2018 Jiabin Rd., Luo Hu District, Shenzhen, China 418001; *and* Unit B, 10th Floor, United Overseas Plaza, No. 11, Lai Yip Street, Kwun Tong, Kowloon, Hong Kong.	All items subject to the EAR. (See § 744.11 of the EAR).	Presumption of Denial	85 FR 59421, 9/22/20. 85 FR 83769, 12/23/20. 87 FR [INSERT FR PAGE NUMBER] June 30, 2022.
	* *	*	* *	*
	Sansha Highlander Marine Information Technology Co. Ltd., a.k.a., the following two aliases: —Sansha Highlander Ocean Information Science and Technology Co. Ltd.; *and* —Sansha Highlander Ocean Information Technology Co. Ltd. Sansha City, Hainan Province, China.	For all items subject to the EAR. (See § 744.11 of the EAR).	Presumption of Denial	87 FR [INSERT FR PAGE NUMBER] June 30, 2022.
	Sanya Highlander Huanyu Ocean Information Technology Corporation, a.k.a., the following one alias: —Sanya Highlander Information Technology Co. Ltd. C1902, SP Tower, Tsinghua Science Park, Beijing, China 100084.	For all items subject to the EAR. (See § 744.11 of the EAR).	Presumption of Denial	87 FR [INSERT FR PAGE NUMBER] June 30, 2022.
	* *	*	* *	*
	Shenzhen Avanlane, a.k.a., the following one alias: —Avanlane Inc. Unit C, D 10/F Shenmao Building News Road, Shenzhen, China; *and* Rm. 311, 3/F, Genplas Industrial Building, 56 Hoi Yuen Road, Kwun Tong, Kowloon, Hong Kong; *and* 62459–4F East Asia Industrial Building, 2 Ho Tin Street, Tuen Mun, N.T., Hong Kong.	For all items subject to the EAR. (See § 744.11 of the EAR).	Presumption of Denial	87 FR [INSERT FR PAGE NUMBER] June 30, 2022.
	* *	*	* *	*
	Sinno Electronics Co., Ltd., a.k.a., the following one alias: —Xinnuo Electronic Technology. Rm. 2408 Dynamic World Building, Zhonghang Rd., Futian District, Shenzhen, China; *and* Rm. 10905 Xingda Garden Building, Kaiyuan Rod, Xingsha Development Area, Changsha, China; *and* Rm. B22, 1F, Block B East Sun Industrial Centre, 16 Shing Yip Street, Kwun Tong, Kowloon, Hong Kong. (See alternate address under Lithuania).	For all items subject to the EAR. (See § 744.11 of the EAR).	Policy of Denial for all items subject to the EAR apart from food and medicine designated as EAR99, which will be reviewed on a case-by-case basis.	87 FR [INSERT FR PAGE NUMBER] June 30, 2022.
	* *	*	* *	*
	Suntric Company Limited, a.k.a., the following one alias: —IC.CN Company Limited. Rm. 311, 3/F, Genplas Industrial Building 56 Hoi Yuen Road, Kwun Tong, Kowloon, Hong Kong; *and* Unit C, D 10/F Shenmao Building News Road, Shenzhen, China; *and* Room 2113–2115, Level 21 Landmark North, 39 Lung Sum Avenue, Sheung Shui, Hong Kong.	For all items subject to the EAR. (See § 744.11 of the EAR).	Presumption of Denial	87 FR [INSERT FR PAGE NUMBER] June 30, 2022.
	* *	*	* *	*
	Wayne Weipeng, the following one alias: —Wang Wayne.	For all items subject to the EAR (See § 744.11 of the EAR).	Presumption of Denial	87 FR [INSERT FR PAGE NUMBER] June 30, 2022.

Country	Entity	License requirement	License review policy	Federal Register citation
	Room 1811, B Bldg., Jiahe Tower, No. 3006 Shennan Middle Rd., Shenzhen, China; *and* Room 1608, B Bldg., Jiahe Tower, No. 3006 Shennan Middle Road, Shenzhen China 518031; *and* Unit C, D 10/F Shenmao Building News Road, Shenzhen, China; *and* Rm. 311, 3/F, Genplas Industrial Bldg., 56 Hoi Yuen Rd., Kwun Tong, Kowloon, Hong Kong; *and* Room 06 Blk A 23/F Hoover Ind. Bldg., 26–38 Kwai Cheong Rd., Kwai Chung N.T., Hong Kong; *and* Unit 614, 6/F., Blk. A, Po Lung Ctr., No. 11 Wang Chiu Road, Kowloon Bay, Kowloon, Hong Kong; *and* No. 11 Wang Chiu Road Unit 614A 6F Po Lung Centre, Hong Kong; *and* Flat/Rm32, 11/F Lee Ka Industrial Building 8NK Fong Street San Po Kong, Kowloon, Hong Kong; *and* Flat/Room 33 8/F Sino Industrial Place 9 Kai Cheung Road, Kowloon, Hong Kong; *and* 62459–4F East Asia Industrial Building, 2 Ho Tin Street, Tuen Mun, N.T., Hong Kong.			
	* *	*	* *	*
	Winninc Electronic, Gaokede Building, Huaqiang North, Shenzhen, China; *and* 1203 High Technology Building, Guangbutun Wuchang District, Wuhan, China; *and* #4 Dong Aocheng 1618, Nanshan District, Shenzhen, China; *and* 2818 Glittery City Shennan Middle Road, Shenzhen, China; *and* Unit 01 & 03, 1/F Lai Sun Yuen Long, No. 27 Wang Yip Street East, Yuen Long, N.T., Hong Kong; *and* Unit 04, 8/F Bright Way Tower No. 33 Mong Kok Rd. Konglong, Hong Kong.	For all items subject to the EAR (See § 744.11 of the EAR).	Policy of Denial for all items subject to the EAR apart from food and medicine designated as EAR99, which will be reviewed on a case-by-case basis.	87 FR [INSERT FR PAGE NUMBER] June 30, 2022.
	* *	*	* *	*
	World Jetta (H.K.) Logistics Limited, a.k.a., the following one alias: —Hong Kong Shijieda Logistics. 1017 Building B Jiahe Huangqiang Block, Futian District, Shenzhen, China.	For all items subject to the EAR (See § 744.11 of the EAR).	Policy of Denial for all items subject to the EAR apart from food and medicine designated as EAR99, which will be reviewed on a case-by-case basis.	87 FR [INSERT FR PAGE NUMBER] June 30, 2022.
	* *	*	* *	*
	Yiru Zhuang, Room 1811, B Bldg., Jiahe Tower, No. 3006 Shennan Middle Rd., Shenzhen, China; *and* Room 06 Blk A 23/F Hoover Ind. Bldg., 26–38 Kwai Cheong Rd., Kwai Chung N.T., Hong Kong; *and* Unit 614, 6/F., Blk A, Po Lung Ctr., No.11 Wang Chiu Road, Kowloon Bay, Kowloon, Hong Kong; *and* Rm. 311, 3/F, Genplas Industrial Bldg., 56 Hoi Yuen Rd., Kwun Tong, Kowloon, Hong Kong; *and* No. 11 Wang Chiu Road Unit 614A 6F Po Lung Centre, Hong Kong.	For all items subject to the EAR. (See § 744.11 of the EAR).	Presumption of Denial	87 FR [INSERT FR PAGE NUMBER] June 30, 2022.
	* *	*	* *	*
*	* *	*	* *	*
LITHUANIA	Sinno Electronics, Kirtimu G 41, Vilnius, Lithuania. (See alternate address under China).	For all items subject to the EAR. (See § 744.11 of the EAR).	Policy of Denial for all items subject to the EAR apart from food and medicine designated as EAR99, which will be reviewed on a case-by-case basis.	87 FR [INSERT FR PAGE NUMBER] June 30, 2022.
*	* *	*	* *	*
PAKISTAN	* *	*	* *	*
	Industrial Process Automation, No. 12, 11 Nishter Road, Lahore, Pakistan.	For all items subject to the EAR. (See § 744.11 of the EAR).	Presumption of Denial	87 FR [INSERT FR PAGE NUMBER] June 30, 2022.
	* *	*	* *	*
	Jim Corporation, 11 Nishter Road, Lahore, Pakistan; *and* No. 521, Executive Office, Plot No. 23, Hilal Road, F–11/1, Islamabad, Pakistan.	For all items subject to the EAR. (See § 744.11 of the EAR).	Presumption of Denial	87 FR [INSERT FR PAGE NUMBER] June 30, 2022.
	* *	*	* *	*

Country	Entity	License requirement	License review policy	Federal Register citation
	Maira Trade International, No. 1 Rahman Street, Office No. 15, Nishter Road, Lahore; *and* No. 1 Rahman Street, Office No. 15, Brandeth Road, Lahore; *and* No. 521, Executive Office, Plot No. 23, Hilal Road, F–11/1, Islamabad, Pakistan.	For all items subject to the EAR. (See § 744.11 of the EAR).	Presumption of Denial	87 FR [INSERT FR PAGE NUMBER] June 30, 2022.
	* *	*	* *	*
	X-Cilent Engineering, 642, Afshan Colony, Rawalpindi Cantt, 46000, Pakistan.	For all items subject to the EAR. (See § 744.11 of the EAR).	See § 744.2(d) of the EAR	87 FR 8182, 2/14/22. 87 FR [INSERT FR PAGE NUMBER] June 30, 2022.
*	* *	*	* *	*
RUSSIA	* *	*	* *	*
	Avant-Space LLC, a.k.a., the following four aliases: —AVANT–SPEIS; —Avant Space Systems; —Avant Space Propulsion Systems; *and* —OOO Avant-Spejs. 4/7 Lugovaya Street, Skolkovo Innovation Center, Moscow, Russia, 143026; *and* 42 Bolshoy Bulvar, Skolkovo, Moscow, Russia, 143026; *and* 12 Presnenskaya Embankment, Moscow, Russia, 123112.	For all items subject to the EAR. (See § 744.11 of the EAR).	Policy of Denial. Case-by-case basis for items for U.S. Government supported use in the International Space Station (ISS).	87 FR 13143, 3/9/22. 87 FR [INSERT FR PAGE NUMBER] June 30, 2022.
	Avcom-Technique, a.k.a., the following four aliases: —Avcom Group; —Avcom-Technique Ltd; —AVCOM–D; *and* —OOO Avkom Tekhnik. Airport Ramenskoe (Zhukovsky), Narkomvod Street 7, Russia; *and* Moscow Region, Zhukovsky City, Narkomvod Street, 7, Russia; *and* Room 5, 95B Kashirskoe Highway, Domodedovo, Moscow Region, 142004, Russia; *and* Pom. 5, D. 95B, Kashirskoe Shosse, Domodedovo, Moskovskaya Region, 142004, Russia.	For all items subject to the EAR. (See § 744.11 of the EAR).	Case-by-case review	87 FR [INSERT FR PAGE NUMBER] June 30, 2022.
	* *	*	* *	*
	Elara, a.k.a., the following one alias: —Joint Stock Company Scientific and Production Complex Elara named after G.A. Illienko. 40 Moskovsky Avenue, Chuvash Republic, 428017; *and* 7 Obraztsova Street, Moscow, Russia, 428020.	For all items subject to the EAR. (See § 744.11 of the EAR).	Policy of denial; Case-by-case basis for items for U.S. Government supported use in the International Space Station (ISS).	87 FR 13143, 3/9/22. 87 FR [INSERT FR PAGE NUMBER] June 30, 2022.
	* *	*	* *	*
	FASTAIR, a.k.a., the following five aliases: —LLC Fastair International; —Fast Air International; —Fast Air; —OOO Fasteir Interneshnl; *and* —OOO Fasteir. 121471, 14, Ryabinovaya Street, Moscow Russia; *and* 121471, 14, Rainovaya Street, Office 511, Moscow, Russia; *and* Rabinovaya Street, 14, Moscow, Russia.	For all items subject to the EAR. (See § 744.11 of the EAR).	Case-by-case review	87 FR [INSERT FR PAGE NUMBER] June 30, 2022.
	* *	*	* *	*
	Intertech Rus LLC, a.k.a., the following one alias: —Intertek Rus OOO. 8, 2nd Brestskaya str., 10th Floor 125047, Moscow Russia; *and* d. 27 str. 2 etazh/pom./kom. 2/IV/1–3,5–25, ul. Elektrozavodskaya Moscow, 107023 Russian Federation; *and* d. 3 str. 2 pom. 506 kom. 69, ul. Krymski Val Moscow, 119049 Russian Federation.	For all items subject to the EAR. (See § 744.11 of the EAR).	See §§ 744.2(d), 744.3(d), and 744.4(d).	87 FR [INSERT FR PAGE NUMBER] June 30, 2022.
	* *	*	* *	*
	JSC Central Research Institute of Machine Building (JSC TsNIIMash), Pionerskaya Street, 4, korpus 22, Moskovskaya obl., Korolov 141070, Russia.	All items subject to the EAR. (See §§ 734.9(g),[3] 746.8(a)(3), and 744.21(b) of the EAR). This license requirement may be overcome by License Exception GOV under § 740.11(b)(2) and (e).	Policy of denial for all items subject to the EAR apart from food and medicine designated as EAR99 and for items for U.S. Government supported use in the International Space Station (ISS), which will be reviewed on a case-by-case basis. See §§ 746.8(b) and 744.21(e).	87 FR 12240, 3/3/22. 87 FR 13061, 3/8/22. 87 FR 34136, 6/6/22. 87 FR [INSERT FR PAGE NUMBER] June 30, 2022.

Country	Entity	License requirement	License review policy	Federal Register citation
	JSC Element, 12 Presnenskaya Embankment, Office 2024, Moscow, Russia, 123112.	For all items subject to the EAR. (See § 744.11 of the EAR). This license requirement may be overcome by License Exception GOV under § 740.11(b)(2) and (e).	Policy of denial; Case-by-case basis for items for U.S. Government supported use in the International Space Station (ISS).	87 FR 13143, 3/9/22. 87 FR [INSERT FR PAGE NUMBER] June 30, 2022.
	* *	*	* *	*
	JSC Rocket and Space Centre—Progress, Zemetsa Street 18, Samarskaya Oblast, Samara 443009, Russia.	All items subject to the EAR. See §§ 734.9(g),[3] 746.8(a)(3), and 744.21(b) of the EAR). This license requirement may be overcome by License Exception GOV under § 740.11(b)(2) and (e).	Policy of denial for all items subject to the EAR apart from food and medicine designated as EAR99 and for items for U.S. Government supported use in the International Space Station (ISS), which will be reviewed on a case-by-case basis. See §§ 746.8(b) and 744.21(e).	87 FR 12240, 3/3/22. 87 FR 34136, 6/6/22. 87 FR [INSERT FR PAGE NUMBER] June 30, 2022.
	* *	*	* *	*
	KingPai Technology Int'l Co., Limited, 3 Gostnichnaya St, Moscow, Russia. (See alternate addresses under China and Vietnam).	For all items subject to the EAR. (See § 744.11).	Policy of Denial for all items subject to the EAR apart from food and medicine designated as EAR99, which will be reviewed on a case-by-case basis.	87 FR [INSERT FR PAGE NUMBER] June 30, 2022.
	* *	*	* *	*
	Laboratory Systems and Technologies LTD, a.k.a., the following one alias: —LST LTD. Burdenko St., 14 Bld. A 4 Stage, Office 1 Room 3, 119121, Moscow Russia.	For all items subject to the EAR. (See § 744.11).	See §§ 744.2(d), 744.3(d), and 744.4(d).	87 FR [INSERT FR PAGE NUMBER] June 30, 2022.
	* *	*	* *	*
	Russian Space Systems (RKS), 222 Sosnovaya, Tsiolkovski, Amurskaya Oblast, Russia, 676470; *and* 53G Aviamotornaya, Moscow, Russia, 111024; *and* 51 Dekabristov, Moscow, Russia, 127490.	For all items subject to the EAR. (See § 744.11 of the EAR). This license requirement may be overcome by License Exception GOV under § 740.11(b)(2) and (e).	Policy of denial; Case-by-case basis for items for U.S. Government supported use in the International Space Station (ISS).	87 FR 13143, 3/9/22. 87 FR [INSERT FR PAGE NUMBER] June 30, 2022.
	* *	*	* *	*
	Scientific Research Institute NII Submikron, 5 Street 2, Proskpekt Georgievski, Zelenograd, Moscow, Russia, 124498.	For all items subject to the EAR. (See § 744.11 of the EAR).	Policy of denial; Case-by-case basis for items for U.S. Government supported use in the International Space Station (ISS).	87 FR 13143, 3/9/22. 87 FR [INSERT FR PAGE NUMBER] June 30, 2022.
	* *	*	* *	*
*	* *	*	* *	*
SINGAPORE	* *	*	* *	*
	Beijing Highlander Digital Technology Co., Ltd., 1 Sunview Rd., #08–43, Singapore 627615. (See alternate address under China).	For all items subject to the EAR. (See § 744.11 of the EAR).	Presumption of Denial	87 FR [INSERT FR PAGE NUMBER] June 30, 2022.
	* *	*	* *	*
SLOVAKIA	Incoff Aerospace S.R.O., a.k.a., the following one alias: —Incoff Group Polianky 3327/5 Bratislava—Mestska Cast Dubravka; Bratislavsky, 84101, Slovakia.	For all items subject to the EAR. (See § 744.11 of the EAR). This license requirement may be overcome by License Exception GOV under § 740.11(b)(2) and (e).	Policy of denial; Case-by-case basis for items for U.S. Government supported use in the International Space Station (ISS).	87 FR 13143, 3/9/22. 87 FR [INSERT FR PAGE NUMBER] June 30, 2022.
	* *	*	* *	*
UNITED ARAB EMIRATES.	* *	*	* *	*

Country	Entity	License requirement	License review policy	Federal Register citation
	Al Noor Alaili Trading Company, a.k.a., the following one alias: —ANATCO. Floor No. 37, Office No. 3706, Latifa Tower, Community Trade Center First, Sheikh Zayed Road, P.O. Box: 40118, Dubai, United Arab Emirates; *and* Office number 3706, Floor number 37, Latifa Tower, Community Trade Center First, Sheikh Zayed Road, Dubai, Dubai, United Arab Emirates; *and* PO Box 40118, Dubai, United Arab Emirates; *and* 40118, Deira, Nakheel Road, Dubai, United Arab Emirates.	For all items subject to the EAR. (See § 744.11 of the EAR).	Presumption of Denial	87 FR [INSERT FR PAGE NUMBER] June 30, 2022.
	* *	*	* *	*
	Gulf Trade House FZC, P.O. Box Number 121463, Sharjah, UAE; *and* Office 75C, Q1–07, Block Q1 Street, Sharjah, UAE.	For all items subject to the EAR. (See § 744.11 of the EAR).	Presumption of Denial	87 FR [INSERT FR PAGE NUMBER] June 30, 2022.
	* *	*	* *	*
	Scott Technologies FZE, a.k.a., the following one alias: —Scot Technologies. P.O. Box 121723, SAIF Zone, Sharjah, UAE; *and* #R5–06C, Sharjah Airport Free Zone (SAIF), Sharjah, UAE; *and* Flat No. 201, Block 8, Muwaileh Sharjah, UAE; *and* Dimas Building, Block 8, 201 Muwaileh Sharjah, UAE; *and* B Block 301–302, Al Hudaiba Awards Building, Dubai Investment Park, Dubai, UAE.	For all items subject to the EAR. (See § 744.11 of the EAR).	Presumption of Denial	87 FR [INSERT FR PAGE NUMBER] June 30, 2022.
	* *	*	* *	*
UNITED KINGDOM	* *	*	* *	*
	Connec Electronic, 36 Gerrard Street, London, England, United Kingdom; *and* 38 John Ashby Close, London, England, United Kingdom. (See alternate addresses under China).	For all items subject to the EAR. (See § 744.11 of the EAR).	Policy of Denial for all items subject to the EAR apart from food and medicine designated as EAR99, which will be reviewed on a case-by-case basis.	87 FR [INSERT FR PAGE NUMBER] June 30, 2022.
	* *	*	* *	*
UZBEKISTAN	Promcomplektlogistic Private Company, a.k.a., the following one alias: —Private Enterprise Promcomplektlogistic. 16 A Navoi St, Shaykhantakhur Region, Tashkent, Uzbekistan.	For all items subject to the EAR. (See § 744.11 of the EAR).	Policy of Denial for all items subject to the EAR apart from food and medicine designated as EAR99, which will be reviewed on a case-by-case basis.	87 FR [INSERT FR PAGE NUMBER] June 30, 2022.
VIETNAM	* *	*	* *	*
	KingPai Technology Int'l Co., Limited, 143–6th Street, 1 Town, Linh Xuan Ward, Thu Duc District, Ho Chi Minh City, Vietnam. (See alternate addresses under China and Russia).	For all items subject to the EAR. (See § 744.11 of the EAR).	Policy of Denial for all items subject to the EAR apart from food and medicine designated as EAR99, which will be reviewed on a case-by-case basis.	87 FR [INSERT FR PAGE NUMBER] June 30, 2022.

* * * * *

Matthew S. Borman,

Deputy Assistant Secretary for Export Administration.

[FR Doc. 2022–14069 Filed 6–28–22; 11:15 am]

BILLING CODE 3510–33–P

DEPARTMENT OF COMMERCE

National Oceanic and Atmospheric Administration

15 CFR Part 904

[Docket No. 220609–0132]

RIN 0648–BI72

Civil Procedures in Civil Administrative Enforcement Proceedings

AGENCY: Office of General Counsel (OGC), National Oceanic and Atmospheric Administration (NOAA), Commerce.

ACTION: Final rule.

SUMMARY: NOAA is amending procedures governing its civil administrative enforcement proceedings. The principal changes include updates to statutory references, clarifications regarding the Administrator's discretionary review, revised directions for appealing a written warning, revised requirements for denying a request for admission, and revised directions for electronic service related to certain appeals and petitions. Other changes remove the requirement for NOAA to challenge late hearing requests, simplify the use of electronic signatures, rename discovery filings, allow depositions by videoconference, require discovery filings to state when a witness is expected to testify in a language other than the English language in order to arrange interpretation, clarify when failing to pay can be a basis for permit sanctions, incorporate Civil Asset Forfeiture Reform Act deadlines into administrative forfeiture proceedings,

and allow NOAA to publish a Notice of Proposed Forfeiture on an official government website. In addition, minor changes update titles and addresses and correct clerical errors.

DATES: This rule becomes effective August 1, 2022.

FOR FURTHER INFORMATION CONTACT: Patrick Carroll or Meggan Engelke-Ros, GCES, (301) 427–2202.

SUPPLEMENTARY INFORMATION: A detailed description of the changes and clarifications proposed for regulations at 15 CFR part 904 is found in the proposed rule that NOAA published in the **Federal Register** at 87 FR 16687 (March 24, 2022) and is not repeated here.

Public Comments Received

NOAA received one comment from the public during the comment period for the proposed rule. This comment is summarized here and is directly followed by NOAA's response.

Comment: The commenter generally suggests that the revisions to 15 CFR part 904, characterized by NOAA as non-substantive, in fact diminish the due process protections afforded to Respondents and restrict their ability to contest violations charged under these regulations. The commenter also expresses a general belief that this revision provides some undue advantage to NOAA, restricts an administrative law judge's authority to issue decisions, and makes it more difficult for the public to understand their rights within this civil administrative process. Specifically, the commenter challenges NOAA's explanation that the proposed removal and reservation of 15 CFR 904.103 merely removes language that is redundant with other existing provision; the commenter requests that NOAA explain what language in 15 CFR 904.103 was redundant.

Response: As explained within the proposed rule, all of the revisions to 15 CFR part 904 merely refine the procedures applicable to NOAA's civil administrative enforcement proceedings. The principal changes afford greater transparency in the application of the NOAA Administrator's discretionary review authority, emphasize impartiality within the written warning appeal process, ensure that responses to requests for admission mirror similar requirements found in Federal Rule of Civil Procedure 36, and clarify the proper channels by which certain appeals and petitions for relief may be filed, including new and updated mailing and electronic mailing addresses.

Other changes remove the requirement for NOAA attorneys to challenge late hearing requests in all circumstances, and simplify and modernize discovery filings, the taking of depositions by videoconference, and the arrangement of interpreters. NOAA is also clarifying its permit sanction procedures and administrative forfeiture proceedings to better explain the application of those provisions, and is authorizing the publication of a Notice of Proposed Forfeiture on a publically available and official government website to expand the available options for achieving effective public notice of the information and rights described at 15 CFR 904.504(b)(2).

Neither the aforementioned revisions nor any of the several clerical corrections made in this final rule undermine principles of due process or diminish a respondent's right to contest a charged violation. Instead, NOAA's amendments increase the accessibility of these procedures and advance fair and just outcomes in NOAA's civil administrative enforcement proceedings.

With respect to the commenter's query regarding 15 CFR 904.103, that section merely reiterates that hearing requests are governed by the procedures set forth in Subpart C of these regulations. 15 CFR 904.200 explains the scope and applicability of Subpart C, and provides that this subpart ''sets forth the procedures governing the conduct of hearings.'' In addition, 15 CFR 904.201 specifically addresses the filing and receipt of hearing requests as well as the docketing of matters with the Office of Administrative Law Judges. Furthermore, the various sections within Subpart C all govern hearing and appeal procedures. As a result, 15 CFR 904.103 is repetitive of the provisions located within Subpart C, and thus, that section is removed and reserved to delete redundancy.

In order to ensure that respondents are apprised of their rights, as a matter of practice and as required by these procedural regulations, NOAA attorneys provide a copy of 15 CFR part 904 to a respondent whenever an enforcement action is initiated against them. *See* 15 CFR 904.101(a)(5). In addition, these regulations remain publicly available within the United States Code of Federal Regulations, and NOAA continues to include a link to these regulations on the NOAA Office of General Counsel website. *See https://www.gc.noaa.gov/enforce-office4.html.*

Changes From the Proposed Rule

This final rule contains no changes from the proposed rule.

Classification

This final rule has been determined to be not significant for purposes of Executive Order 12866.

There are no reporting, recordkeeping or other compliance requirements in this rule. Nor does this rule contain an information-collection request that would implicate the Paperwork Reduction Act, 44 U.S.C. 3501, *et seq.*

The Chief Counsel for Regulation of the Department of Commerce certified to the Chief Counsel for Advocacy of the Small Business Administration during the proposed rule stage that this action would not have a significant economic impact on a substantial number of small entities. The factual basis for the certification was published in the proposed rule and is not repeated here. No comments were received regarding this certification. As a result, a final regulatory flexibility analysis was not required and none was prepared.

List of Subjects in 15 CFR Part 904

Administrative practice and procedure, fisheries, fishing, fishing vessels, penalties, seizures and forfeitures.

Dated: June 17, 2022.

Walker Smith,

General Counsel, National Oceanic and Atmospheric Administration.

For reasons set forth in the preamble, 15 CFR part 904 is amended as follows:

PART 904—CIVIL PROCEDURES

■ 1. The authority citation for part 904 is revised to read as follows:

Authority: 16 U.S.C. 1801 *et seq.,* 16 U.S.C. 1531 *et seq.,* 16 U.S.C. 1361 *et seq.,* 16 U.S.C. 3371 *et seq.,* 16 U.S.C. 1431 *et seq.,* 16 U.S.C. 6901 *et seq.,* 16 U.S.C. 773 *et seq.,* 16 U.S.C. 951 *et seq.,* 16 U.S.C. 5001 *et seq.,* 16 U.S.C. 3631 *et seq.,* 42 U.S.C. 9101 *et seq.,* 30 U.S.C. 1401 *et seq.,* 16 U.S.C. 971 *et seq.,* 16 U.S.C. 781 *et seq.,* 16 U.S.C. 2431 *et seq.,* 16 U.S.C. 972 *et seq.,* 16 U.S.C. 916 *et seq.,* 16 U.S.C. 1151 *et seq.,* 16 U.S.C. 3601 *et seq.,* 16 U.S.C. 1851 note; 15 U.S.C. 330 *et seq.,* 16 U.S.C. 2461 *et seq.,* 16 U.S.C. 5101 *et seq.,* 16 U.S.C. 1371 *et seq.,* 16 U.S.C. 3601 *et seq.,* 16 U.S.C. 1822 note, 16 U.S.C. 4001 *et seq.,* 16 U.S.C. 5501 *et seq.,* 16 U.S.C. 5601 *et seq.,* 16 U.S.C. 973 *et seq.,* 16 U.S.C. 1827a, 16 U.S.C. 7701 *et seq.,* 16 U.S.C. 7801 *et seq.,* 16 U.S.C. 1826g, 51 U.S.C. 60101 *et seq.,* 16 U.S.C. 7001 *et seq.,* 16 U.S.C. 7401 *et seq.,* 16 U.S.C. 2401 *et seq.,* 16 U.S.C. 1826k note, 1857 note, 22 U.S.C. 1980, Pub. L. 116–340, 134 Stat. 5128.

■ 2. In § 904.1, revise paragraphs (c)(1) through (34) and add paragraphs (c)(35) through (40) to read as follows:

§ 904.1 Purpose and scope.

* * * * *

(c) * * *

(1) Anadromous Fish Products Act, 16 U.S.C. 1822 note;

(2) Antarctic Conservation Act of 1978, 16 U.S.C. 2401 *et seq.;*

(3) Antarctic Marine Living Resources Convention Act of 1984, 16 U.S.C. 2431 *et seq.;*

(4) Antarctic Mineral Resources Protection Act of 1990, 16 U.S.C. 2461 *et seq.;*

(5) Atlantic Coastal Fisheries Cooperative Management Act, 16 U.S.C. 5101 *et seq.;*

(6) Atlantic Salmon Convention Act of 1982, 16 U.S.C. 3601 *et seq.;*

(7) Atlantic Striped Bass Conservation Act, 16 U.S.C. 1851 note;

(8) Atlantic Tunas Convention Act of 1975, 16 U.S.C. 971 *et seq.;*

(9) Billfish Conservation Act of 2012, 16 U.S.C. 1827a;

(10) DESCEND Act of 2020, Public Law 116–340, 134 Stat. 5128;

(11) Deep Seabed Hard Mineral Resources Act, 30 U.S.C. 1401 *et seq.;*

(12) Dolphin Protection Consumer Information Act, 16 U.S.C. 1371 *et seq.;*

(13) Driftnet Impact Monitoring, Assessment, and Control Act, 16 U.S.C. 1822 note;

(14) Eastern Pacific Tuna Licensing Act of 1984, 16 U.S.C. 972 *et seq.;*

(15) Endangered Species Act of 1973, 16 U.S.C. 1531 *et seq.;*

(16) Ensuring Access to Pacific Fisheries Act, 16 U.S.C. 7701 *et seq.* (North Pacific), 16 U.S.C. 7801 *et seq.* (South Pacific);

(17) Fish and Seafood Promotion Act of 1986, 16 U.S.C. 4001 *et seq.;*

(18) Fisherman's Protective Act of 1967, 22 U.S.C. 1980;

(19) Fur Seal Act Amendments of 1983, 16 U.S.C. 1151 *et seq.;*

(20) High Seas Driftnet Fishing Moratorium Protection Act, 16 U.S.C. 1826g;

(21) High Seas Fishing Compliance Act, 16 U.S.C. 5501 *et seq.;*

(22) Lacey Act Amendments of 1981, 16 U.S.C. 3371 *et seq.;*

(23) Land Remote Sensing Policy Act of 1992, as amended, 51 U.S.C. 60101 *et seq.;*

(24) Magnuson–Stevens Fishery Conservation and Management Act, 16 U.S.C. 1801 *et seq.;*

(25) Marine Mammal Protection Act of 1972, 16 U.S.C. 1361 *et seq.;*

(26) National Marine Sanctuaries Act, 16 U.S.C. 1431 *et seq.;*

(27) North Pacific Anadromous Stocks Convention Act of 1992, 16 U.S.C. 5001 *et seq.;*

(28) Northern Pacific Halibut Act of 1982, 16 U.S.C. 773 *et seq.;*

(29) Northwest Atlantic Fisheries Convention Act of 1995, 16 U.S.C. 5601 *et seq.;*

(30) Ocean Thermal Energy Conversion Act of 1980, 42 U.S.C. 9101 *et seq.;*

(31) Pacific Salmon Treaty Act of 1985, 16 U.S.C. 3631 *et seq.;*

(32) Pacific Whiting Act of 2006, 16 U.S.C. 7001 *et seq.;*

(33) Port State Measures Agreement Act of 2015, 16 U.S.C. 7401 *et seq.;*

(34) Shark Conservation Act of 2010, 16 U.S.C. 1826k note, 1857 note;

(35) South Pacific Tuna Act of 1988, 16 U.S.C. 973 *et seq.;*

(36) Sponge Act, 16 U.S.C. 781 *et seq.;*

(37) Tuna Conventions Act of 1950, 16 U.S.C. 951 *et seq.;*

(38) Weather Modification Reporting Act, 15 U.S.C. 330 *et seq.;*

(39) Western and Central Pacific Fisheries Convention Implementation Act, 16 U.S.C. 6901 *et seq.;* and

(40) Whaling Convention Act of 1949, 16 U.S.C. 916 *et seq.*

* * * * *

■ 3. In § 904.2:

■ a. Remove the definition of ''ALJ Docketing Center'';

■ b. Revise the definitions of ''Applicable statute'', ''Authorized officer'', and ''Final administrative decision''; and

■ c. Remove the definition of ''PPIP''.

The revisions read as follows:

§ 904.2 Definitions and acronyms.

* * * * *

Applicable statute means a statute cited in § 904.1(c), and any regulations issued by NOAA to implement it.

Authorized officer means:

(1) Any commissioned, warrant, or petty officer of the U.S. Coast Guard (USCG);

(2) Any special agent or fishery enforcement officer of NMFS;

(3) Any officer designated by the head of any Federal or state agency that has entered into an agreement with the Secretary of Commerce to enforce the provisions of any statute administered by NOAA; or

(4) Any USCG personnel accompanying and/or acting under the direction of any person described in paragraph (1), (2), or (3) of this definition.

* * * * *

Final administrative decision means an order or decision of NOAA assessing a civil penalty, permit sanction, or written warning, which is not subject to further Agency review under this part, and which is subject to collection proceedings or judicial review in an appropriate Federal district court as authorized by law.

* * * * *

■ 4. Revise § 904.3 to read as follows:

§ 904.3 Filing and service.

(a) Service of a NOVA (§ 904.101), NOPS (§ 904.302), NIDP (§ 904.303), Notice of Proposed Forfeiture (§ 904.504), Notice of Seizure (§ 904.501), Notice of Summary Sale (§ 904.505), Written Warning (§ 904.402), or Initial Decision (§ 904.271) may be made by certified mail (return receipt requested), electronic transmission, or third party commercial carrier to an addressee's last known address or by personal delivery. Service of a notice under this subpart will be considered effective upon receipt.

(b) Service of documents and papers, other than those described in paragraph (a) of this section, may be made by first class mail (postage prepaid), electronic transmission, or third party commercial carrier, to an addressee's last known address or by personal delivery. Service of documents and papers will be considered effective upon the date of postmark (or as otherwise shown for government-franked mail), delivery to third party commercial carrier, electronic transmission, or upon personal delivery.

(c) Whenever this part requires service of a document or other paper referred to in paragraph (a) or (b) of this section, such service may effectively be made on the agent for service of process, on the attorney for the person to be served, or other representative. Refusal by the person to be served (including an agent, attorney, or representative) of service of a document or other paper will be considered effective service of the document or other paper as of the date of such refusal. In cases where a document or paper described in paragraph (a) of this section is returned unclaimed, service will be considered effective if the U.S. Postal Service provides an affidavit stating that the party was receiving mail at the same address during the period when certified service was attempted.

(d) Any documents and other papers filed or served must be signed:

(1) By the person or persons filing the same;

(2) By an officer thereof if a corporation;

(3) By an officer or authorized employee if a government instrumentality; or

(4) By an attorney or other person having authority to sign.

■ 5. In § 904.4, revise the first sentence to read as follows:

§ 904.4 Computation of time periods.

For a NOVA, NOPS or NIDP, the 30-day response period begins to run on the date the notice is received. * * *

■ 6. In § 904.101, revise paragraph (a) introductory text to read as follows:

§ 904.101 Notice of violation and assessment (NOVA).

(a) A NOVA will be issued by NOAA and served on the respondent(s). The NOVA will contain:

* * * * *

■ 7. In § 904.102, revise paragraphs (c) and (d) to read as follows:

§ 904.102 Procedures upon receipt of a NOVA.

* * * * *

(c) The respondent may, within the 30-day period specified in paragraph (a) of this section, request an extension of time to respond. Agency counsel may grant an extension of up to 30 days unless he or she determines that the requester could, exercising reasonable diligence, respond within the 30-day period. If Agency counsel does not respond to the request within 48 hours of its receipt, the request is granted automatically for the extension requested, up to a maximum of 30 days. A telephonic response to the request within the 48-hour period is considered an effective response, and will be followed by written confirmation.

(d) Agency counsel may, for good cause, grant an additional extension beyond the 30-day period specified in paragraph (c) of this section.

§ 904.103 [Removed and Reserved]

■ 8. Remove and reserve § 904.103.

■ 9. In § 904.105, revise paragraph (a) to read as follows:

§ 904.105 Payment of final civil penalty.

(a) Respondent must make full payment of the civil penalty within 30 days of the date upon which the NOVA becomes effective as the final administrative decision and order of NOAA under § 904.104 or the date of the final administrative decision as provided in subpart C of this part, as directed by NOAA. Payment must be made in accordance with the bill and instructions provided by NOAA.

* * * * *

■ 10. In § 904.107, revise paragraph (b) to read as follows:

§ 904.107 Joint and several respondents.

* * * * *

(b) A hearing request by one joint and several respondent is considered a request by the other joint and several respondent(s). Agency counsel, having received a hearing request from one joint and several respondent, will send a copy of it to the other joint and several respondent(s) in the case. However, if the requesting joint and several respondent settles with the Agency prior to the hearing, upon notification by the Agency, any remaining joint and several respondent(s) must affirmatively request a hearing within the time period specified or the case will be removed from the hearing docket as provided in § 904.213.

* * * * *

■ 11. In § 904.108, revise paragraphs (e), (f), and (h) to read as follows:

§ 904.108 Factors considered in assessing civil penalties.

* * * * *

(e) Financial information regarding respondent's ability to pay should be submitted to Agency counsel as soon as possible after the receipt of the NOVA. If a respondent has requested a hearing on the violation alleged in the NOVA and wants the Initial Decision of the Judge to consider his or her inability to pay, verifiable, complete, and accurate financial information must be submitted to Agency counsel at least 30 days in advance of the hearing, except where the applicable statute expressly provides for a different time period. No information regarding the respondent's ability to pay submitted by the respondent less than 30 days in advance of the hearing will be admitted at the hearing or considered in the Initial Decision of the Judge, unless the Judge rules otherwise. If the Judge decides to admit any information related to the respondent's ability to pay submitted less than 30 days in advance of the hearing, Agency counsel will have 30 days to respond to the submission from the date of admission. In deciding whether to submit such information, the respondent should keep in mind that the Judge may assess a civil penalty either greater or smaller than that assessed in the NOVA.

(f) Issues regarding ability to pay will not be considered in an administrative review of an Initial Decision if the financial information was not previously presented by the respondent to the Judge prior to or at the hearing.

* * * * *

(h) Whenever a statute requires NOAA to take into consideration a respondent's ability to pay when assessing a civil penalty and the respondent has requested a hearing on the violation alleged in the NOVA, the Agency must submit information on the respondent's financial condition so that the Judge may consider that information, along with any other factors required to be considered, in the Judge's assessment of a civil penalty. Agency counsel may obtain such financial information through discovery procedures under § 904.240, or otherwise. A respondent's refusal or failure to respond to such discovery requests may serve as the basis for inferring that such information would have been adverse to any claim by respondent of inability to pay the assessed civil penalty, or result in respondent being barred from asserting financial hardship.

■ 12. In § 904.200, revise paragraph (a) to read as follows:

§ 904.200 Scope and applicability.

(a) This subpart sets forth the procedures governing the conduct of hearings and the issuance of initial and final administrative decisions of NOAA involving alleged violations of the laws cited in § 904.1(c) and any other laws or authorities administered by NOAA and regulations implementing these laws, including civil penalty assessments and permit sanctions and denials. By separate regulation, these rules may be applied to other proceedings.

* * * * *

■ 13. Revise § 904.201 to read as follows:

§ 904.201 Hearing requests and case docketing.

(a) If the respondent wishes a hearing on a NOVA, NOPS or NIDP, the request must be dated and in writing, and must be served in conformance with § 904.3 on the Agency counsel specified in the notice. The respondent must either attach a copy of the NOVA, NOPS or NIDP or refer to the relevant NOAA case number. Agency counsel will promptly forward the request for hearing to the Office of Administrative Law Judges.

(b) Any party requesting a hearing under § 904.102(a)(3) must provide current contact information, including a working telephone number and email address (if one is available). The Agency and the Office of Administrative Law Judges must be promptly notified of any changes to this information.

(c) If a written application is made to NOAA after the expiration of the time period established in this part for the required filing of hearing requests, Agency counsel will promptly forward the request for hearing along with documentation of service and any other relevant materials to the Office of Administrative Law Judges for a determination on whether such request shall be considered timely filed. Determinations by the Judge regarding

untimely hearing requests under this section shall be in writing.

(d) Upon its receipt for filing in the Office of Administrative Law Judges, each request for hearing will be promptly assigned a docket number and thereafter the proceeding will be referred to by such number. Written notice of the assignment of hearing to a Judge will promptly be given to the parties.

■ 14. In § 904.202, revise paragraph (a) to read as follows:

§ 904.202 Filing of documents.

(a) Pleadings, papers, and other documents in the proceeding must be filed directly with the Office of Administrative Law Judges, be served on all other parties, and conform with all applicable requirements of § 904.3.

* * * * *

■ 15. In § 904.204, revise paragraphs (a) and (m) to read as follows:

§ 904.204 Duties and powers of Judge.

* * * * *

(a) Rule on timeliness of hearing requests pursuant to § 904.201(c);

* * * * *

(m) Assess a civil penalty or impose a permit sanction, condition, revocation, or denial of permit application, taking into account all of the factors required by applicable law;

* * * * *

■ 16. In § 904.206, revise paragraphs (a), (b), and (d) to read as follows:

§ 904.206 Pleadings, motions, and service.

(a) The original of all pleadings and documents must be filed with the Judge and a copy served on the Office of Administrative Law Judges and each party. All pleadings or documents when submitted for filing must show that service has been made upon all parties. Such service must be made in accordance with § 904.3(b).

(b) Pleadings and documents to be filed may be reproduced by printing or any other process, provided the copies are clear and legible; must be dated, signed; and must show the docket description and title of the proceeding, and the title, if any, address, and telephone number of the signatory. If typewritten, the impression may be on only one side of the paper and must be double spaced, if possible, except that quotations may be single spaced and indented.

* * * * *

(d) Unless otherwise provided, the answer to any written motion, pleading, or petition must be served within 20 days after service of the motion. If a motion states that opposing counsel has no objection, it may be acted upon as soon as practicable, without awaiting the expiration of the 20-day period. Answers must be in writing, unless made in response to an oral motion made at a hearing; must fully and completely advise the parties and the Judge concerning the nature of the opposition; must admit or deny specifically and in detail each material allegation of the pleading answered; and must state clearly and concisely the facts and matters of law relied upon. Any new matter raised in an answer will be deemed controverted.

* * * * *

■ 17. Revise § 904.209 to read as follows:

§ 904.209 Expedited administrative proceedings.

In the interests of justice and administrative efficiency, the Judge, on his or her own initiative or upon the application of any party, may expedite the administrative proceeding. A motion by a party to expedite the administrative proceeding may, at the discretion of the Judge, be made orally or in writing with concurrent actual notice to all parties. Upon granting a motion to expedite the scheduling of an administrative proceeding, the Judge may expedite pleading schedules, prehearing conferences and the hearing, as appropriate. If a motion for an expedited administrative proceeding is granted, a hearing on the merits may not be scheduled with less than 5 business days' notice, unless all parties consent to an earlier hearing.

■ 18. Revise § 904.214 to read as follows:

§ 904.214 Stipulations.

The parties may, by stipulation, agree upon any matters involved in the administrative proceeding and include such stipulations in the record with the consent of the Judge. Written stipulations must be signed and served on all parties.

■ 19. In § 904.216, revise paragraph (a) introductory text to read as follows:

§ 904.216 Prehearing conferences.

(a) Prior to any hearing or at any other time deemed appropriate, the Judge may, upon his or her own initiative, or upon the application of any party, direct the parties to appear for a conference or arrange a telephone conference. The Judge shall provide at least 24 hours' notice of the conference to the parties, and shall record such conference by audio recording or court reporter, to consider:

* * * * *

■ 20. In § 904.240, revise paragraphs (a), (b), and (f) introductory text to read as follows:

§ 904.240 Discovery generally.

(a) *Initial Disclosures.* Prior to hearing, the Judge shall require the parties to submit Initial Disclosures and set a deadline for their submission. Except for information regarding a respondent's ability to pay an assessed civil penalty, these Initial Disclosures will normally obviate the need for further discovery.

(1) The Initial Disclosures shall include the following information: A factual summary of the case; a summary of all factual and legal issues in dispute; a list of all defenses that will be asserted, together with a summary of all factual and legal bases supporting each defense; a list of all potential witnesses, together with a summary of their anticipated testimony; and a list of all potential exhibits.

(2) The Initial Disclosures must be signed by the parties or their attorneys and must be served on all parties in conformance with § 904.3, along with a copy of each potential exhibit listed therein.

(3) A party has the affirmative obligation to supplement their Initial Disclosures as available information or documentation relevant to the stated charges or defenses becomes known to the party.

(b) *Additional discovery.* Upon written motion by a party, the Judge may allow additional discovery only upon a showing of relevance, need, and reasonable scope of the evidence sought, by one or more of the following methods: Deposition upon oral examination or written questions, written interrogatories, production of documents or things for inspection and other purposes, and requests for admission. With respect to information regarding a respondent's ability to pay an assessed civil penalty, the Agency may serve any discovery request (*i.e.,* deposition, interrogatories, admissions, production of documents) directly upon the respondent in conformance with § 904.3 of this part without first seeking an order from the Judge.

* * * * *

(f) *Failure to comply.* If a party fails to comply with any provision of this section, including with respect to their Initial Disclosures, a subpoena, or an order concerning discovery, the Judge may, in the interest of justice:

* * * * *

■ 21. In § 904.241, revise paragraphs (a), (c), and (d)(1) to read as follows:

§ 904.241 Depositions.

(a) *Notice.* If a motion for deposition is granted, and unless otherwise ordered by the Judge, the party taking the deposition of any person must serve on that person and on any other party written notice at least 15 days before the deposition would be taken (or 25 days if the deposition is to be taken outside the United States). The notice must state the name and address of each person to be examined, the time and place where the examination would be held, the name, mailing address, telephone number, and email address (if one is available) of the person before whom the deposition would be taken, and the subject matter about which each person would be examined.

* * * * *

(c) *Alternative deposition methods.* By order of the Judge, the parties may use other methods of deposing parties or witnesses, such as telephonic depositions, depositions through videoconference, or depositions upon written questions. Objections to the form of written questions are waived unless made within 5 days of service of the questions.

(d) * * *

(1) At hearing, part or all of any deposition, so far as admissible under this Part as though the witness were then testifying, may be used against any party who was present or represented at the taking of the deposition or had reasonable notice.

* * * * *

■ 22. In § 904.242, revise paragraphs (a) and (b) and add paragraph (d) to read as follows:

§ 904.242 Interrogatories.

(a) *Service and use.* If ordered by the Judge, any party may serve upon any other party written interrogatories in conformance with § 904.3.

(b) *Answers and objections.* Answers and objections must be made in writing under oath, and reasons for the objections must be stated. Answers must be signed by the person making them and objections must be signed by the party or attorney making them. Unless otherwise ordered, answers and objections must be served on all parties within 20 days after service of the interrogatories in conformance with § 904.3.

* * * * *

(d) *Use of interrogatories at hearing.* Answers may be used at hearing in the same manner as depositions under § 904.241(d).

■ 23. In § 904.243, revise paragraphs (a) and (b) to read as follows:

§ 904.243 Admissions.

(a) *Request.* If ordered by the Judge, any party may serve on any other party a written request for admission of the truth of any relevant matter of fact set forth in the request in conformance with § 904.3, including the genuineness of any relevant document described in the request. Copies of documents must be served with the request. Each matter for which an admission is requested must be separately stated.

(b) *Response.* Each matter is admitted unless a written answer or objection is served within 20 days of service of the request in conformance with § 904.3, or within such other time as the Judge may allow. The answering party must specifically admit or deny each matter, or state the reasons why he or she cannot truthfully admit or deny it. A denial must fairly respond to the substance of the matter; and when good faith requires that a party qualify an answer or deny only a part of a matter, the answer must specify the part admitted and qualify or deny the rest. The answering party may assert lack of knowledge or information as a reason for failing to admit or deny only if the party states that it has made reasonable inquiry and that the information it knows or can readily obtain is insufficient to enable it to admit or deny.

* * * * *

■ 24. In § 904.250, revise paragraph (a) to read as follows:

§ 904.250 Notice of time and place of hearing.

(a) The Judge shall be responsible for scheduling the hearing. With due regard for the convenience of the parties, their representatives, or witnesses, the Judge shall fix the time, place and date for the hearing and shall notify all parties of the same. The Judge will promptly serve on the parties notice of the time and place of hearing. The hearing will not be held less than 20 days after service of the notice of hearing unless the hearing is expedited as provided under paragraph (d) of this section.

* * * * *

■ 25. In § 904.251, revise paragraphs (a)(3) and (i) and add paragraph (j) to read as follows:

§ 904.251 Evidence.

(a) * * *

(3) In any case involving a charged violation of law in which the respondent has admitted an allegation, evidence may still be presented to establish matters of aggravation or mitigation.

* * * * *

(i) *Foreign law.* A party who intends to raise an issue concerning the law of a foreign country must give reasonable notice. The Judge, in determining foreign law, may consider any relevant material or source, whether or not submitted by a party.

(j) *Foreign language exhibits.* Exhibits in a foreign language must be translated into English before such exhibits are offered into evidence. Copies of both the untranslated and translated versions of the proposed exhibits, along with the name and qualifications of the translator, must be served on the opposing party at least 10 days prior to the hearing unless the parties otherwise agree.

■ 26. In § 904.252, revise paragraphs (a) and (f) to read as follows:

§ 904.252 Witnesses.

(a) *Fees.* Witnesses, other than employees of a Federal agency, summoned in an administrative proceeding, including discovery, are eligible to receive the same fees and mileage as witnesses in the courts of the United States.

* * * * *

(f) *Testimony in a foreign language.* If a witness is expected to testify in a language other than the English language, the party sponsoring the witness must indicate that in its Initial Disclosures so that an interpreter can be arranged for the hearing. When available, the interpreter should be court certified under 28 U.S.C. 1827.

■ 27. In § 904.260, revise paragraph (b) to read as follows:

§ 904.260 Recordation of hearing.

* * * * *

(b) The official transcript of testimony taken, together with any exhibits, briefs, or memoranda of law filed therewith, will be filed with the Office of Administrative Law Judges. Transcripts of testimony will be available in any hearing and will be supplied to the parties at the cost of the Agency.

* * * * *

■ 28. In § 904.270, revise paragraph (b) to read as follows:

§ 904.270 Record of decision.

* * * * *

(b) The Judge will arrange for appropriate storage of the records of any administrative proceeding, which place of storage need not necessarily be located physically within the Office of Administrative Law Judges.

■ 29. In § 904.271, revise paragraphs (a) introductory text, (b), (c), and (d) introductory text to read as follows:

§ 904.271 Initial decision.

(a) After expiration of the period provided in § 904.261 for the filing of reply briefs (unless the parties have waived briefs or presented proposed findings orally at the hearing), the Judge will render an Initial Decision upon the record in the case, setting forth:

* * * * *

(b) If the parties have presented oral proposed findings at the hearing or have waived presentation of proposed findings, the Judge may at the termination of the hearing announce the decision, subject to later issuance of a written Initial Decision under paragraph (a) of this section. In such cases, the Judge may direct the prevailing party to prepare proposed findings, conclusions, and an order.

(c) The Judge will serve the Initial Decision on each of the parties, the Chief of the Enforcement Section of the NOAA Office of General Counsel, and the Administrator. Upon request, the Judge will promptly certify to the Administrator the record, including the original copy of the Initial Decision, as complete and accurate.

(d) An Initial Decision becomes effective as the final administrative decision of NOAA 60 days after service, unless:

* * * * *

■ 30. Revise § 904.272 to read as follows:

§ 904.272 Petition for reconsideration.

Unless an order or Initial Decision of the Judge specifically provides otherwise, any party may file a petition for reconsideration of an order or Initial Decision issued by the Judge. Such petitions must state the matter claimed to have been erroneously decided, and the alleged errors and relief sought must be specified with particularity. Petitions must be filed within 20 days after the service of such order or Initial Decision. The filing of a petition for reconsideration shall operate as a stay of an order or Initial Decision or its effectiveness date unless specifically so ordered by the Judge. Within 15 days after the petition is filed, any party to the administrative proceeding may file an answer in support or in opposition.

■ 31. Revise § 904.273 to read as follows:

§ 904.273 Administrative review of decision.

(a) Subject to the requirements of this section, any party who wishes to seek review of an Initial Decision of a Judge must Petition for Review of the Initial Decision within 30 days after the date the decision is served. The petition must be served on the Administrator in conformance with § 904.3(b) at the following address: Administrator, National Oceanic and Atmospheric Administration, Department of Commerce, Room 5128, 14th Street and Constitution Avenue NW, Washington, DC 20230. Copies of the Petition for Review, and all other documents and materials required in paragraph (d) of this section, must be served in conformance with § 904.3(b) on all parties and to either *administrative.appeals@noaa.gov* or the following address: Chief, Oceans and Coasts Section, NOAA Office of General Counsel, 1305 East-West Highway, SSMC 4, Suite 6111, Silver Spring, MD 20910.

(b) The Administrator may elect to issue an order to review the Initial Decision without petition and may affirm, reverse, modify or remand, in whole or in part, the Judge's Initial Decision. Any such order must be issued within 60 days after the date the Initial Decision is served.

(c) Review by the Administrator of an Initial Decision is discretionary and is not a matter of right. If a party files a timely petition for discretionary review, or review is timely initiated by the Administrator, the effectiveness of the Initial Decision is stayed until further order of the Administrator or until the Initial Decision becomes final pursuant to paragraph (h) of this section. In determining whether or not to grant discretionary review, the Administrator will consider:

(1) Whether the Initial Decision contains significant factual or legal errors that warrant further review by the Administrator; and

(2) Whether fairness or other policy considerations warrant further consideration by the Administrator. Types of cases that fall within these criteria include, but are not limited to, those in which;

(i) The Initial Decision conflicts with one or more other NOAA administrative decisions or federal court decisions on an important issue of federal law;

(ii) The Judge decided an important federal question in a way that conflicts with prior rulings of the Administrator;

(iii) The Judge decided a question of federal law that is so important that the Administrator should pass upon it even absent a conflict; or

(iv) The Judge so far departed from the accepted and usual course of administrative proceedings as to call for an exercise of the Administrator's supervisory power.

(d) A Petition for Review must comply with the following requirements regarding format and content:

(1) The petition must include a concise statement of the case, that contains a statement of facts relevant to the issues submitted for review, and a summary of the argument that contains a succinct, clear and accurate statement of the arguments made in the body of the petition;

(2) The petition must set forth, in detail, specific objections to the Initial Decision, the bases for review, and the relief requested;

(3) Each issue raised in the petition must be separately numbered, concisely stated, and supported by detailed citations to specific pages in the record, and to statutes, regulations, and principal authorities. Petitions may not refer to or incorporate by reference entire documents or transcripts;

(4) A copy of the Judge's Initial Decision must be attached to the petition;

(5) Copies of all cited portions of the record must be attached to the petition;

(6) A petition, exclusive of attachments and authorities, must not exceed 20 pages in length and must be in the form articulated in § 904.206(b); and

(7) Issues of fact or law not argued before the Judge may not be raised in the petition unless such issues were raised for the first time in the Judge's Initial Decision, or could not reasonably have been foreseen and raised by the parties during the hearing. The Administrator will not consider new or additional evidence that is not a part of the record before the Judge.

(e) The Administrator may deny a Petition for Review that is untimely or fails to comply with the format and content requirements in paragraph (d) of this section without further review.

(f) No oral argument on Petitions for Review will be allowed.

(g) Within 30 days after service of a petition for discretionary review, any party may file and serve an answer in support or in opposition. An answer must comport with the format and content requirements in paragraphs (d)(5) through (d)(7) of this section and set forth detailed responses to the specific objections, bases for review and relief requested in the petition. No further replies are allowed, unless requested by the Administrator.

(h) If the Administrator has taken no action in response to the petition within 120 days after the petition is served, said petition shall be deemed denied and the Judge's Initial Decision shall become the final agency decision with an effective date 150 days after the petition is served.

(i) If the Administrator issues an order denying discretionary review, the order

will be served on all parties in conformance with § 904.3, and will specify the date upon which the Judge's Initial Decision will become effective as the final agency decision. The Administrator need not give reasons for denying review.

(j) If the Administrator grants discretionary review or elects to review the Initial Decision without petition, the Administrator will issue an order to that effect. Such order may identify issues to be briefed and a briefing schedule. Such issues may include one or more of the issues raised in the Petition for Review and any other matters the Administrator wishes to review. Only those issues identified in the order may be argued in any briefs permitted under the order. The Administrator may choose to not order any additional briefing, and may instead make a final determination based on any Petitions for Review, any responses and the existing record.

(k) If the Administrator grants or elects to take discretionary review, and after expiration of the period for filing any additional briefs under paragraph (j) of this section, the Administrator will render a written decision on the issues under review. The Administrator will serve the decision on each of the parties in conformance with § 904.3. The Administrator's decision becomes the final administrative decision on the date it is served, unless otherwise provided in the decision, and is a final agency action for purposes of judicial review; except that an Administrator's decision to remand the Initial Decision to the Judge is not final agency action.

(l) An Initial Decision shall not be subject to judicial review unless:

(1) The party seeking judicial review has exhausted its opportunity for administrative review by filing a Petition for Review with the Administrator in compliance with this section, and

(2) The Administrator has issued a final ruling on the petition that constitutes final agency action under paragraph (k) of this section or the Judge's Initial Decision has become the final agency decision under paragraph (h) or (i) of this section.

(m) For purposes of any subsequent judicial review of the agency decision, any issues that are not identified in any Petition for Review, in any answer in support or opposition, by the Administrator, or in any modifications to the Initial Decision are waived.

(n) If an action is filed for judicial review of a final agency decision, and the decision is vacated or remanded by a court, the Administrator shall issue an order addressing further administrative proceedings in the matter. Such order may include a remand to the Chief Administrative Law Judge for further proceedings consistent with the judicial decision, or further briefing before the Administrator on any issues the Administrator deems appropriate.

■ 32. Revise § 904.300 to read as follows:

§ 904.300 Scope and applicability.

(a) This subpart sets forth procedures governing the suspension, revocation, modification, and denial of permits. The bases for sanctioning a permit are set forth in § 904.301.

(1) *Revocation.* A permit may be cancelled, with or without prejudice to issuance of the permit in the future. Additional requirements for issuance of any future permit may be imposed.

(2) *Suspension.* A permit may be suspended either for a specified period of time or until stated requirements are met, or both. If contingent on stated requirements being met, the suspension is with prejudice to issuance of any permit until the requirements are met.

(3) *Modification.* A permit may be modified, as by imposing additional conditions and restrictions. If the permit was issued for a foreign fishing vessel under section 204(b) of the Magnuson-Stevens Fishery Conservation and Management Act, additional conditions and restrictions may be imposed on the application of the foreign nation involved and on any permits issued under such application.

(4) *Denial.* Issuance of a permit in the future may be denied through imposition of a permit denial.

(b) This subpart does not apply to the Land Remote Sensing Policy Act of 1992, as amended (51 U.S.C. 60101 *et seq.*), or to the Deep Seabed Hard Mineral Resources Act (30 U.S.C. 1401 *et seq.*). Regulations governing denials of licenses issued under the Land Remote Sensing Policy Act of 1992, as amended (51 U.S.C. 60101 *et seq.*), appear at 15 CFR part 960. Regulations governing sanctions and denials of permits issued under the Deep Seabed Hard Mineral Resources Act (30 U.S.C. 1401 *et seq.*) appear at 15 CFR part 970.

■ 33. Revise § 904.301 to read as follows:

§ 904.301 Bases for permit sanctions.

(a) Unless otherwise specified in a settlement agreement, or otherwise provided by statutes or in this subpart, NOAA may sanction any permit issued under the statutes cited in § 904.1(c). The bases for an action to sanction or deny a permit include the following:

(1) Violation of any statute administered by NOAA, including violation of any regulation promulgated or permit condition or restriction prescribed thereunder, by the permit holder/applicant or with the use of a permitted vessel;

(2) The failure to pay a civil penalty imposed under any marine resource law administered by NOAA;

(3) The failure to pay a criminal fine imposed or to satisfy any other liability incurred in a judicial proceeding under any of the statutes administered by NOAA; or

(4) The failure to pay any amount in settlement of a civil forfeiture imposed on a vessel or other property.

(b) A sanction may be applied to a permit involved in the underlying violation, as well as to any permit held or sought by the permit holder/applicant, including permits for other vessels. (See, *e.g.,* 16 U.S.C. 1858(g)(1)(i)).

(c) A permit sanction may not be extinguished by sale or transfer. A vessel's permit sanction is not extinguished by sale or transfer of the vessel, nor by dissolution or reincorporation of a vessel owner corporation, and shall remain with the vessel until lifted by NOAA.

■ 34. In § 904.302, revise paragraph (a) to read as follows:

§ 904.302 Notice of permit sanction (NOPS).

(a) Service of a NOPS against a permit issued to a foreign fishing vessel will be made on the agent authorized to receive and respond to any legal process for vessels of that country.

* * * * *

■ 35. In § 904.303:

■ a. Remove and reserve paragraph (a); and

■ b. Revise paragraphs (b) and (d),

The revisions read as follows:

§ 904.303 Notice of intent to deny permit (NIDP).

* * * * *

(b) The NIDP will set forth the basis for its issuance and any opportunity for a hearing.

* * * * *

(d) A NIDP may be issued in conjunction with or independent of a NOPS.

■ 36. In § 904.304, revise paragraph (b) to read as follows:

§ 904.304 Opportunity for hearing.

* * * * *

(b) There will be no opportunity for a hearing to contest a NOPS or NIDP if the permit holder/applicant had a previous opportunity to participate as a party in an administrative or judicial proceeding with respect to the violation

that forms the basis for the NOPS or NIDP, whether or not the permit holder/applicant did participate, and whether or not such a proceeding was held.

§ 904.310 [Removed and Reserved]

■ 37. Remove and reserve § 904.310.

■ 38. In § 904.311, revise the section heading, introductory text, and paragraph (b) to read as follows:

§ 904.311 Effect of payment on permit sanction.

Where a permit has been sanctioned on one of the bases set forth in § 904.301(a)(2) through (4) and the permit holder/applicant pays the criminal fine, civil penalty, or amount in settlement of a civil forfeiture in full or agrees to terms satisfactory to NOAA for payment:

* * * * *

(b) Any permit suspended under § 904.301(a)(2) through (4) will be reinstated by order of NOAA; or

* * * * *

§ 904.320 [Removed and Reserved]

■ 39. Remove and reserve § 904.320.

■ 40. In § 904.402, revise paragraph (a) to read as follows:

§ 904.402 Procedures.

(a) Any person authorized to enforce the laws listed in § 904.1(c) or Agency counsel may serve a written warning on a respondent.

* * * * *

■ 41. In § 904.403:

■ a. Remove and reserve paragraph (a); and

■ b. Revise paragraph (b).

The revision reads as follows:

§ 904.403 Review and appeal of a written warning.

* * * * *

(b) The recipient of a written warning may appeal to the NOAA Deputy General Counsel. The appeal must be served in conformance with § 904.3 and submitted to *administrative.appeals@noaa.gov* or the NOAA Office of the General Counsel, Herbert Hoover Office Building, 14th & Constitution Avenue NW, Washington, DC 20230, within 60 days of receipt of the written warning.

(1) An appeal from a written warning must be in writing and must present the facts and circumstances that explain or deny the violation described in the written warning.

(2) [Reserved]

* * * * *

■ 42. Revise § 904.500 to read as follows:

§ 904.500 Purpose and scope.

(a) This subpart sets forth procedures governing the release, abandonment, forfeiture, remission of forfeiture, or return of property seized under any of the laws cited in § 904.1(c).

(b) Except as provided in this subpart, these regulations apply to all seized property subject to forfeiture under any of the laws cited in § 904.1(c). This subpart is in addition to, and not in contradiction of, any special rules regarding seizure, holding or disposition of property seized under these statutes.

■ 43. Revise § 904.501 to read as follows:

§ 904.501 Notice of seizure.

Within 60 days from the date of the seizure, NOAA will serve a Notice of Seizure on the owner or consignee, if known or easily ascertainable, or other party that the facts of record indicate has an interest in the seized property. In cases where the property is seized by a state or local law enforcement agency; a Notice of Seizure will be served in the above manner within 90 days from the date of the seizure. The Notice will describe the seized property and state the time, place and reason for the seizure, including the provisions of law alleged to have been violated. The Notice will inform each interested party of his or her right to file a claim to the seized property, and state a date by which a claim must be filed, which may not be less than 35 days after service of the Notice. The Notice may be combined with a Notice of the sale of perishable fish issued under § 904.505. If a claim is filed, the case will be referred promptly to the U.S. Department of Justice for institution of judicial proceedings.

■ 44. In § 904.502, revise paragraph (c) to read as follows:

§ 904.502 Bonded release of seized property.

* * * * *

(c) If NOAA grants the request, the amount paid by the requester will be deposited in a NOAA suspense account. The amount so deposited will for all purposes be considered to represent the property seized and subject to forfeiture, and payment of the amount by requester constitutes a waiver by requester of any claim rising from the seizure and custody of the property. NOAA will maintain the money so deposited pending further order of NOAA, order of a court, or disposition by applicable administrative proceedings.

* * * * *

■ 45. Revise § 904.503 to read as follows:

§ 904.503 Appraisement.

NOAA may appraise seized property to determine its domestic value. Domestic value means the price at which such or similar property is offered for sale at the time and place of appraisement in the ordinary course of trade. If there is no market for the seized property at the place of appraisement, the value in the principal market nearest the place of appraisement may be used. If the seized property may not lawfully be sold in the United States, its domestic value may be determined by other reasonable means.

■ 46. In § 904.504, revise paragraphs (a), (b)(1), and (b)(3)(i) to read as follows:

§ 904.504 Administrative forfeiture proceedings.

(a) *When authorized.* This section applies to property with a value of $500,000 or less, and that is subject to administrative forfeiture under the applicable statute. This section does not apply to conveyances seized in connection with criminal proceedings.

(b) * * *

(1) Within 60 days from the date of the seizure, or within 90 days of the date of the seizure where the property is seized by a state or local law enforcement agency, NOAA will publish a Notice of Proposed Forfeiture once a week for at least three successive weeks in a newspaper of general circulation in the Federal judicial district in which the property was seized or post a notice on an official government forfeiture website for at least 30 consecutive days. However, if the value of the seized property does not exceed $1,000, the Notice may be published by posting for at least three successive weeks in a conspicuous place accessible to the public at the National Marine Fisheries Service Enforcement Office, U.S. District Court, or the U.S. Customs House nearest the place of seizure, with the date of posting indicated on the Notice. In addition, a reasonable effort will be made to serve the Notice on each person whose identity, address and interest in the property are known or easily ascertainable.

* * * * *

(3)(i) Any person claiming the seized property may file a claim with NOAA, at the address indicated in the Notice, within 30 days of the date the final Notice was published or posted. The claim must state the claimant's interest in the property.

* * * * *

■ 47. In § 904.505, revise paragraph (c) to read as follows:

§ 904.505 Summary sale.

* * * * *

(c) NOAA will serve the Notice of the Summary Sale on the owner or consignee, if known or easily ascertainable, or to any other party that the facts of record indicate has an interest in the seized fish, unless the owner or consignee or other interested party has otherwise been personally notified. Notice will be sent either prior to the sale, or as soon thereafter as practicable.

* * * * *

■ 48. In § 904.506, revise paragraphs (a)(1) and (b)(1) to read as follows:

§ 904.506 Remission of forfeiture and restoration of proceeds of sale.

(a) * * *

(1) This section establishes procedures for filing with NOAA a petition for the return of any property which has been or may be administratively forfeited under the provisions of any statute administered by NOAA that authorizes the remission or mitigation of forfeitures.

* * * * *

(b) * * *

(1) Any person claiming an interest in any property which has been or may be administratively forfeited under the provisions of § 904.504 may, at any time after seizure of the property, but no later than 90 days after the date of forfeiture, petition for a remission or mitigation of the forfeiture and restoration of the proceeds of such sale, or such part thereof as may be claimed by the petitioner by serving the petition in conformance with § 904.3 on *administrative.appeals@noaa.gov* or the Chief of the Enforcement Section of the NOAA Office of General Counsel, 1315 East-West Highway, SSMC 3, Suite 15828, Silver Spring, MD 20910.

* * * * *

■ 49. In § 904.509, revise paragraph (g)(2) to read as follows:

§ 904.509 Disposal of forfeited property.

* * * * *

(g) * * *

(2) Destruction will be accomplished in accordance with the requirements of 41 CFR parts 101–1 through 101–49.

* * * * *

[FR Doc. 2022–13492 Filed 6–29–22; 8:45 am]

BILLING CODE 3510–22–P

SECURITIES AND EXCHANGE COMMISSION

17 CFR Parts 232, 240, 249, 270, 275, and 279

[Release Nos. 34–95148; IA–6056; IC–34635; File No. S7–15–21]

RIN 3235–AM97

Electronic Submission of Applications for Orders Under the Advisers Act and the Investment Company Act, Confidential Treatment Requests for Filings on Form 13F, and Form ADV–NR; Amendments to Form 13F

AGENCY: Securities and Exchange Commission.

ACTION: Final rule.

SUMMARY: The Securities and Exchange Commission (''Commission'' or ''SEC'') is adopting amendments to rules to convert the filing of certain applications, confidential treatment requests, and forms from paper to electronic submission. Specifically, we are amending our rules to require that the following types of filings be submitted via our Electronic Data Gathering, Analysis, and Retrieval (''EDGAR'') system: applications for orders under any section of the Investment Advisers Act of 1940 (''Advisers Act'') and confidential treatment requests for filings made under section 13(f) of the Securities Exchange Act of 1934 (''Exchange Act''). We also are adopting rule amendments to harmonize the requirements for the submission of applications for orders under the Advisers Act and the Investment Company Act of 1940 (''Investment Company Act''). In addition, we are amending other rules and a form to require the electronic submission of Form ADV–NR through the Investment Adviser Registration Depository (''IARD'') system. We also are adopting requirements for non-resident general partners and non-resident managing agents to amend their Form ADV–NR within 30 days whenever any information contained in the form becomes inaccurate by filing with the Commission a new Form ADV–NR. Further, we are adopting amendments to Form 13F to require managers to provide additional identifying information and to allow managers to disclose, for any security reported on Form 13F, the security's share class level Financial Instrument Global Identifier (''FIGI''). Finally, we are adopting certain technical amendments to Form 13F, including modernizing the structure of data reporting and amending the instructions on Form 13F for confidential treatment requests in light of a recent decision of the U.S. Supreme Court.

DATES:

Effective date: This rule is effective August 29, 2022, except for the amendments to Form 13F (referenced in 17 CFR 249.325) which are effective January 3, 2023.

Compliance date: The applicable compliance dates are discussed in section II.D. of this final rule.

FOR FURTHER INFORMATION CONTACT: Zeena Abdul-Rahman, Senior Counsel; Sara Cortes, Senior Special Counsel; or Brian McLaughlin Johnson, Assistant Director, at (202) 551–6792, Investment Company Regulation Office, Division of Investment Management; or Alexis Palascak, Senior Counsel at (202) 551–6787 or *IArules@sec.gov,* Investment Adviser Regulation Office, Division of Investment Management, Securities and Exchange Commission, 100 F Street NE, Washington, DC 20549 8549.

SUPPLEMENTARY INFORMATION: The Commission is adopting amendments to 17 CFR 232.11 (''rule 11''), 17 CFR 232.100 (''rule 100''), 17 CFR 232.101 (''rule 101''), 17 CFR 232.102 (''rule 102''), and 17 CFR 232.201 (''rule 201'') of 17 CFR 232.11 through 232.903 (''Regulation S–T'') relating to electronic filing on the EDGAR system; 17 CFR 275.0–4 (''rule 0–4'') and 17 CFR 275.203–1 (''rule 203–1'') under the Advisers Act; 17 CFR 279.4 (''Form ADV–NR'') and the instructions to 17 CFR 279.1 (''Form ADV'') under the Advisers Act; 17 CFR 270.0–2 (''rule 0–2'') under the Investment Company Act; 17 CFR 240.24b–2 (''rule 24b–2'') under the Exchange Act; and 17 CFR 249.325 (''Form 13F'').

TABLE OF CONTENTS

I. Introduction
II. Discussion
A. Applications
1. Electronic Filing
2. The EDGAR Filing System
3. Availability of Hardship Exemptions
4. Elimination of Certain Requirements
B. Form ADV–NR
C. Rule 13f–1 and Form 13F
1. Electronic Filings of 13(f) Confidential Treatment Requests
2. Other Amendments to Form 13F
D. Effective and Compliance Dates
III. Other Matters
IV. Economic Analysis
A. Introduction and Primary Goals of the Regulations and Form Amendments
B. Economic Baseline
C. Economic Effects
1. Benefits
2. Costs
3. Efficiency, Competition, and Capital Formation
D. Reasonable Alternatives

1. Alternative Filing System for Advisers Act Orders
2. Alternative Filing System for 13(f) Confidential Treatment Requests
3. Single Form 13F Filing With Electronic Attachment
4. Alternative Security Identifier Requirement
V. Paperwork Reduction Act
A. Amendments to Rule 0–4
1. Burden Estimate for Rule 0–4
B. Amendment to Form ADV–NR
1. Burden Estimate for Form ADV–NR
C. Form ADV and Rule 203–1
D. Amendments to Form 13F
VI. Regulatory Flexibility Act Certification
VII. Statutory Authority
Text of Rule and Form Amendments

I. Introduction

The Commission seeks to promote efficiency, transparency, and operational resiliency by modernizing the manner in which information is submitted to us and, where appropriate, disclosed to the public. Electronic filing improves our ability to achieve these goals. Specifically, electronic filing minimizes the risks of delay in staff receiving the information via paper submissions, and it increases efficiency in the staff review process by reducing staff processing time, increasing quality assurance, and improving the ability to review and analyze information contained in electronic submissions. In addition to increasing staff efficiency of review, publicly filed electronic submissions are more readily available on our website in easily searchable formats, which benefits investors, the asset management industry, and other market participants.

In addition, electronic filing capabilities have proved to be an effective measure in addressing certain of the logistical and operational issues raised by the spread of coronavirus disease (''COVID–19''). We believe that converting paper submissions to electronic submissions would allow the Commission, and those persons filing the submissions, to more effectively and efficiently navigate any future disruptive events—like COVID–19—that make the paper submission process unnecessarily burdensome, impractical, or unavailable. Further, we believe that the proposed electronic submission process better reflects the current business practices and operations of those persons that file the submissions and, as a result, would likely reduce the burden associated with submitting such filings. These benefits are among the reasons that the Commission has transitioned filings from paper to electronic format in many contexts.[1]

We proposed rule and form amendments to require electronic filing of certain forms, as well as additional amendments to enhance information reported on Form 13F and to modernize the form, in November 2021.[2] Commenters generally supported the Commission's goal of modernizing the manner in which information is submitted to the Commission and generally agreed that the proposed amendments would increase filing efficiency and reduce burdens on filers.[3] As discussed in more detail below, we are adopting these amendments largely as proposed. Therefore, the final rules will require applications for orders under any section of the Advisers Act,[4] and of confidential treatment requests for filings made under section 13(f) of the Exchange Act (''13(f) Confidential Treatment Requests''), to be submitted through the EDGAR system.[5] In addition, we are adopting amendments to Form 13F: (i) a requirement for an institutional investment manager[6] (''manager'') that files Form 13F to provide certain identifying information, (ii) in response to comments received, allow managers to disclose, for any security reported on Form 13F, the security's share class level FIGI in addition to the security's Committee on Uniform Securities Identification Procedures (''CUSIP'') number; (iii) certain technical amendments to modernize the information reported on Form 13F, consistent with its existing eXtensible Markup Language (''XML'') structured data language, and (iv) a modification to instruction 2.d. of Form 13F's Confidential Treatment Instructions to update that instruction and make it consistent with a recent U.S. Supreme Court decision.[7] We also are adopting other rule amendments to harmonize the requirements for submission of applications for orders under the Advisers Act and the Investment Company Act.

Finally, we are adopting amendments to require Form ADV–NR filers to file electronically, rather than in paper format. Non-resident general partners and non-resident managing agents of both SEC-registered investment advisers and exempt reporting advisers must file Form ADV–NR to appoint an agent for service of process in the United States.[8] Under the final rules, they will submit Form ADV–NR through the IARD system.

II. Discussion

A. Applications

1. Electronic Filing

Section 206A of the Advisers Act gives the Commission the authority to provide exemptions from any provision of the Advisers Act or any rule or regulation thereunder, provided the exemption is necessary or appropriate in the public interest and consistent with the protection of investors and the purposes fairly intended by the policy and provisions of the Advisers Act.[9] Applicants seeking an exemption must apply to the Commission to obtain an order. Applicants typically include, but are not limited to, registered investment advisers, exempt reporting advisers, and persons not registered with the Commission but who meet the definition of ''investment adviser'' under the Advisers Act.[10]

As proposed, we are adopting amendments to Regulation S–T and Advisers Act rule 0–4 to require persons applying for an order under the

[1] *See* Amendments to the Commission's Rules of Practice, Release No. 34–90442 (Nov. 17, 2020) [85 FR 86464 (Dec. 30, 2020)]; *see also* Electronic Signatures in Regulation S–T Rule 302, Release No. 33–10889 (Nov. 17, 2020) [85 FR 78224 (Dec. 4, 2020)]; *see also* Updating Edgar Filing Requirements, Release No. 33–11005 (Nov. 4, 2021).

[2] *See* Electronic Submission of Applications for Orders under the Advisers Act and the Investment Company Act, Confidential Treatment Requests for Filings on Form 13F, and Form ADV–NR; Amendments to Form 13F, Release No. IC–34415 (Nov. 4, 2021) [86 FR 64839 (Nov. 19, 2021)] (''Proposing Release''). The comment letters on the Proposing Release (File No. S7–15–21) are available at *https://www.sec.gov/comments/s7-15-21/s71521.htm.*

[3] *See e.g.,* Comment Letter of the Investment Company Institute (Dec. 17, 2021) (''ICI Comment Letter''); Comment Letter of the Private Investor Coalition (Dec. 17, 2021) (''PIC Comment Letter''); Comment Letter of WhaleWisdom (Dec. 17, 2021) (''WhaleWisdom Comment Letter''); Joint Comment Letter of the American Bankers Association and CUSIP Global Services (Dec. 20, 2021) (''ABA and CUSIP Comment Letter'').

[4] Applications for registration as an investment adviser under the Advisers Act and applications for withdrawal from registration are filed via IARD. *See* 17 CFR 275.203–1; 17 CFR 275.203–2. We are not altering these requirements.

[5] The EDGAR Filer Manual, which is promulgated by the Commission, sets out the technical formatting requirements for electronic submissions. *See* 17 CFR 232.301.

[6] The term ''institutional investment manager'' includes any person, other than a natural person, investing in or buying and selling securities for its own account, and any person exercising investment discretion with respect to the account of any other person. *See* section 13(f)(6)(A) of the Exchange Act [15 U.S.C. 78m(f)(6)]. The term ''person'' includes any natural person, company, government, or political subdivision, agency, or instrumentality of a government. *See* section 3(a)(9) of the Exchange Act [15 U.S.C. 78c(3)(9)].

[7] *Food Marketing Institute* v. *Argus Leader Media,* 139 S.Ct. 2356 (2019) (overturning the longstanding interpretation set forth in *National Parks* v. *Morton,* 498 F.2d 765 (D.C. Cir. 1974) of ''confidential'' for purposes of FOIA exemption 4).

[8] As proposed, the final rule will permit Form ADV–NR filers to file the form in paper format if granted a hardship exemption under 17 CFR 275.203–3.

[9] 15 U.S.C. 80b–6a.

[10] *See* 15 U.S.C. 80b–2(a)(11) (defining ''investment adviser'').

Advisers Act, for which a form with instructions is not specifically prescribed, to file applications electronically through EDGAR.[11] These amendments will make the application process for orders under the Advisers Act more consistent with the application process for orders under the Investment Company Act, which has been requiring applicants to file electronically through EDGAR since 2009.[12] Persons applying for orders under both the Advisers Act and the Investment Company Act will be able to file applications jointly in a single submission. As is the case for applications under the Investment Company Act, temporary hardship exemptions from electronic filing will not be available for applications for orders under the Advisers Act, but continuing hardship exemptions from electronic filing will be available.

We received one comment letter supportive of requiring persons to file applications for orders under the Advisers Act electronically on EDGAR, stating that it would increase filing efficiency and promote a streamlined and consistent application process for advisers and funds.[13] The commenter also supported allowing applicants seeking orders under both the Advisers Act and the Investment Company Act to file applications jointly in a single submission, agreeing that it would reduce burdens for applicants filing joint requests for relief.[14] We are adopting the amendments as proposed.

Currently, an applicant seeking an order under the Advisers Act must file the application, as well as a proposed notice of application, in paper and in quintuplicate.[15] Once the Commission receives the application, it takes several steps to process it, including delivering it to the Commission's mailroom for stamping and logging, and then routing it to appropriate staff. Staff then creates a notification in the EDGAR system to assign a file number, manually uploads the application onto the Commission's public website, and processes the application for internal tracking. This process creates inefficiencies in a number of ways, including those resulting from the absence in Advisers Act rule 0–4 of a specific addressee at the Commission for applications.[16] Any delay between Commission receipt and receipt by the appropriate staff member causes a delay in the public availability of the application. Public availability of the application aids applicants, as well as investors. For example, applicants consult previously filed applications to apply precedent and address any differences from prior applications, which in turn can expedite the review process.[17] Investors may consult applications to the extent they may inform their decisions with respect to selecting or retaining an investment adviser.

Applicants seeking an order under the Investment Company Act have been filing applications through EDGAR since 2009, before which time, they filed applications in paper.[18] In our experience, the transition from paper to electronic applications under the Investment Company Act has led to more efficient and timely application processing. We anticipate that the transition from paper to electronic applications under the Advisers Act similarly will lead to more efficient and timely processing of such applications.

As is the case with applications for orders under the Investment Company Act, once EDGAR accepts an application for an order under the Advisers Act, the application will be immediately available to appropriate staff and the public, in a more easily searchable format.[19] This automated process is designed to eliminate the inefficiencies and delays caused by manually processing paper filings, as discussed above, which in turn will allow the Commission to conduct more efficient and timely reviews, and will provide more immediate transparency to the public. Moreover, the more easily searchable format will aid Commission staff, applicants, investors, and other interested parties that consult filed applications.

2. The EDGAR Filing System

As proposed, the final rules will require persons to file applications for orders under the Advisers Act through EDGAR, even though advisers make other submissions through IARD (including registration applications under the Advisers Act).[20] We received one comment letter supporting this aspect of the proposal, as long as filers will continue to be able to receive confidential treatment for non-public documents.[21] As with other persons that make submissions on EDGAR, applicants will be subject to the provisions of Regulation S–T, which will continue to include provisions for requesting confidential treatment.[22]

We are choosing EDGAR as the filing system for a number of reasons. First, the cost to advisers of submitting electronic applications through EDGAR will be relatively low.[23] Second, EDGAR should require fewer technological changes than IARD to accept applications for orders under the Advisers Act, because it already is designed to accept applications for orders under the Investment Company Act. Third, EDGAR will allow for applications under both the Investment Company Act and the Advisers Act to be made in a single filing. For applications with multiple co-applicants (*i.e.,* if certain applicants were included for Advisers Act relief and others were included for Investment Company Act relief), the applicants would be able to submit the application with all co-applicants included in one submission. The applicants would choose one applicant to list first as the

[11] Rule 0–4 concerns general requirements for applications under the Advisers Act, among other things. Regulation S–T concerns general requirements for electronic filings. *See* 17 CFR 232.11, 17 CFR 232.100, 17 CFR 232.101, 17 CFR 232.102, 17 CFR 232.201, and 17 CFR 275.0–4.

[12] *See generally,* Mandatory Electronic Submission of Applications for Orders under the Investment Company Act and Filings Made Pursuant to Regulation E, Release No. 33–8981 (Oct. 29, 2008) [73 FR 65516 (Nov. 4, 2008)] (''2008 IC Applications Release'') (effective date, Jan. 1, 2009).

[13] *See* ICI Comment Letter.

[14] *See* Proposing Release, *supra* footnote 2, at section III.

[15] *See* Proposing Release, *supra* footnote 2.

[16] The final rules will designate the Secretary of the Commission as the addressee for paper applications for orders under both the Advisers Act and the Investment Company Act (*e.g.,* applications made in paper pursuant to a hardship exemption under Regulation S–T). *See infra* footnotes 28 and 29, and accompanying text.

[17] *See* Commission Policy and Guidelines for Filing of Applications for Exemption from Some or All of the Provisions of the Investment Company Act of 1940 and the Investment Advisers Act of 1940, Release No. IA–969 (Apr. 30, 1985) (discussing that applicants should recognize the differences between their proposal and prior applications requesting similar relief and, to the extent possible, bring their proposal within applicable precedent. Further, applicants should cite and discuss applicable precedent.).

[18] *See* 2008 IC Applications Release, *supra* footnote 12.

[19] As is the case with applications for orders under the Investment Company Act, related correspondence and supplemental information will not be automatically disseminated publicly through the EDGAR system but will be available immediately to Commission staff.

[20] *See e.g.,* 17 CFR 275.203–1 (application for investment adviser registration), 17 CFR 275.203–2 (withdrawal from investment adviser registration), 17 CFR 275.203–3 (hardship exemptions from the requirement to make Advisers Act filings electronically with IARD), and 17 CFR 275.204–4 (reporting by exempt reporting advisers).

[21] *See* ICI Comment Letter.

[22] *See* 17 CFR 232.101.

[23] *See infra* sections IV.C and V.A of this Release (discussing the costs associated with submitting applications electronically). Although investment advisers register using the IARD system, some advisers may be familiar with the EDGAR system as a result of other required filings on EDGAR, such as certain filings made pursuant to sections 13 and 16 of the Exchange Act or registration statements filed on behalf of registered investment companies they manage. *See* 17 CFR 240.13f–1, 17 CFR 240.13d–1, 15 U.S.C. 78p(a).

''primary'' co-applicant. Then, they would include in the EDGAR submission the information for all other co-applicants. Fourth, the process for filing applications for orders under the Advisers Act through EDGAR will be consistent with the process for filing applications for orders under the Investment Company Act, which is designed to facilitate internal processing efficiencies by Commission staff. Finally, having applications under both the Investment Company Act and the Advisers Act in the same system is designed to increase transparency for the public, because they will only need to learn how to access one system to locate all relevant applications.

As with other persons that make submissions on EDGAR, applicants will be subject to the provisions of Regulation S–T and the EDGAR Filer Manual.[24] Therefore, we are adopting conforming amendments to Regulation S–T. We did not receive any comments on these amendments to Regulation S–T, and are adopting them as proposed.

- We are adopting conforming amendments to rule 11 of Regulation S–T to add ''Investment Advisers Act'' as a defined term that will mean the Investment Advisers Act of 1940.
- We are adopting conforming amendments to rule 100 of Regulation S–T to clarify that all applicants for an order under the Advisers Act (and not just registered investment advisers) are subject to Regulation S–T.[25]
- We are adopting conforming amendments to rule 102 of Regulation S–T to provide that previously filed exhibits, whether in paper or electronic format, may be incorporated by reference to the extent permitted by 17 CFR 275.0–6 (Advisers Act rule 0–6) (concerning incorporation by reference in applications).

We also are adopting a clarifying amendment concerning applications for orders under the Investment Company Act. As proposed, we are amending rule 101 of Regulation S–T to provide that the filing of an application for an order under any section of the Investment Company Act must be made on EDGAR as required by the EDGAR Filer Manual, as defined in rule 11 of Regulation S–T, and that, notwithstanding 17 CFR 232.104 (rule 104 of Regulation S–T), the documents will be considered as officially filed with or furnished to, as applicable, the Commission.[26]

3. Availability of Hardship Exemptions

As proposed, the final rule will provide that temporary hardship exemptions from electronic filing will not be available for applications for orders under the Advisers Act, but continuing hardship exemptions from electronic filing will be available. We did not receive any comments on this aspect of the proposal and are adopting it as proposed. Rule 201 of Regulation S–T provides that if an electronic filer experiences unanticipated technical difficulties preventing the timely preparation and submission of an electronic filing, the electronic filer may file in paper format no later than one business day after the date on which the filing was to be made, subject to certain requirements and exclusions (''temporary hardship exemption''). This temporary hardship exemption is available automatically but must be followed by a confirming electronic copy within six business days. The Commission is amending rule 201 so it will exclude applications for orders under the Advisers Act, as it does with applications for orders under the Investment Company Act. As a result, temporary hardship exemptions will not be available for applications for orders under the Advisers Act, as is the case with applications for orders under the Investment Company Act. The rules under the Advisers Act do not provide submission deadlines for applications for orders under the Advisers Act, and we believe that submission exigencies for these applications will be rare, if they were to occur at all.

A filer may apply for a continuing hardship exemption from electronic filing under [17 CFR 232.202] (''rule 202 of Regulation S–T'') if it cannot file all or part of a filing without undue burden or expense. A continuing hardship exemption may be granted for a limited time period or indefinitely. Time-limited continuing hardship exemptions may be conditioned upon filing the document in electronic format by a certain date. Continuing hardship exemptions will be available for applications for orders under the Advisers Act under rule 202 of Regulation S–T, as it is currently written, without any amendments.

Final rule 0–4's specifications for paper applications, as amended, will continue to apply for any remaining paper applications, such as filings made pursuant to a continuing hardship exemption under rule 202 of Regulation S–T.[27] Final rule 0–4 will provide that the Secretary of the Commission is the designated addressee of such paper submissions.[28] As proposed, we are adopting an identical clarifying change to designate the Secretary of the Commission as addressee of any remaining paper submissions under the Investment Company Act.[29]

4. Elimination of Certain Requirements

As proposed, we are adopting amendments to harmonize requirements for applications for orders under the Advisers Act and the Investment Company Act, and further reduce filing burdens. First, we are adopting amendments to eliminate the requirement for applicants seeking orders under the Advisers Act to notarize verifications and statements of fact, as proposed.[30] The Commission previously removed this requirement for applications under the Investment Company Act, and the Commission has not had significant issues or concerns with removing notarizations in that context.[31] We received one comment letter supporting this proposed amendment, agreeing that it will reduce burdens for applicants.[32] We believe that the notarization requirement is unnecessary because other requirements provide sufficient assurance of the legitimacy of signatures in electronic filings.[33]

Second, we are adopting amendments to eliminate the requirement for applicants seeking orders under the Advisers Act to include proposed notices as exhibits to applications, as

[24] *See* 17 CFR 232.101(a)(xxiii); the EDGAR Filer Manual is *available at https://www.sec.gov/edgar/filer-information/current-edgar-filer-manual.*

[25] The amendments to 17 CFR 232.100(b) will replace ''registrants'' with ''[p]ersons or entities'' whose filings are subject to review by the Division of Investment Management.

[26] *See* 17 CFR 232.101(a)(iv).

[27] Regulation S–T generally requires requests for confidential treatment of an application to be filed in paper, subject to certain exceptions, and provides a process for seeking a continuing hardship exemption. *See* 17 CFR 232.101(c)(1)(i) (confidential treatment) and 17 CFR 232.202 (continuing hardship exemption).

[28] *See* 17 CFR 275.0–4(a).

[29] We anticipate paper submissions will be rare. *See* 17 CFR 270.0–2(a). As proposed, we are correcting a typo in rule 0–4 to refer to the correct singular and plural of the word ''original'' when discussing duplicate original copies in paper applications.

[30] *See* 17 CFR 275.0–4(d).

[31] *See* 2008 IC Applications Release, *supra* footnote 12.

[32] *See* ICI Comment Letter; Proposing Release, *supra* footnote 2, at section III.

[33] Regulation S–T will continue to require that each signatory to an electronic filing manually sign a signature page or other document authenticating, acknowledging, or otherwise adopting his or her signature that appears in typed form in the electronic filing, as is currently required. This document must be executed before or at the time the electronic filing is made, must be retained by the filer for a period of five years, and must be made available to the Commission upon request. *See* 17 CFR 232.302(b). Filers must continue to submit a notarized authentication to the Commission when submitting a Form ID to gain initial access to the EDGAR filing system, as is currently required.

proposed.[34] The Commission previously removed this requirement for applications for orders under the Investment Company Act, and it has reduced filing burdens for applicants.[35] We received one comment letter supporting this proposed amendment, agreeing that it will reduce burdens for applicants.[36]

Finally, we are adopting amendments to remove the reference to microfilming in Advisers Act rule 0–4(b) and Investment Company Act rule 0–2(b), as proposed. The Commission no longer microfilms applications for orders under either the Advisers Act or the Investment Company Act. Therefore, the references to microfilming are no longer relevant.[37] We did not receive any comments on this aspect of the proposal.

B. Form ADV–NR

As proposed, we are adopting amendments to require Form ADV–NR filers to file electronically through IARD, rather than in paper format.[38] Non-resident general partners and non-resident managing agents of both SEC-registered investment advisers and exempt reporting advisers must file Form ADV–NR to appoint an agent for service of process in the United States.[39] The final rules will specify that Form ADV–NR must be filed through IARD, the same system advisers use to file Form ADV.[40] Although we did not receive any comment letters concerning Form ADV–NR specifically, we received one comment letter supporting the proposal to require electronic filing generally, because it would help increase the efficiency of the filing process while reducing burdens on filers, as we stated in the Proposing Release about filing Form ADV–NR electronically.[41] Therefore, we are adopting the amendments as proposed.

Consistent with current requirements, the final rules will continue to provide that filing Form ADV–NR is mandatory for non-resident general partners and non-resident managing agents of SEC-registered investment advisers and exempt reporting advisers, and must be filed in connection with an adviser's initial Form ADV application or report.[42] A general partner or managing agent of an SEC-registered adviser or exempt reporting adviser who becomes a non-resident after the adviser's initial application or report has been submitted must file Form ADV–NR within 30 days, as is currently required. The Commission collects this information to ensure that a non-resident general partner or managing agent of an investment adviser appoints an agent for service of process in the United States.

IARD will present final Form ADV–NR in fillable format and require signatures in electronic format. Members of the public will be able to view Forms ADV–NR through the same system they view Forms ADV, which is the Investment Adviser Public Disclosures (IAPD), the public interface of IARD. This will improve transparency to the public, because it will eliminate manual steps that Commission staff and members of the public currently take to view Forms ADV–NR.[43] We believe that requiring electronic submission of Form ADV–NR will enhance our ability to collect and access the information on the form and reduce the burden associated with filing and processing Forms ADV–NR. Furthermore, we believe that requiring filers to submit Form ADV–NR electronically will allow filers to more effectively and efficiently navigate future disruptive events—like COVID–19—when staff and filers are unable to access their physical work facilities to complete, submit, and process paper fillings.

As proposed, the final rule will permit Form ADV–NR filers to file the form in paper format if granted a hardship exemption under [17 CFR 275.203–3] (''rule 203–3'').[44] We did not receive any comments on this aspect of the proposal and are adopting it as proposed. As proposed, the final rules will require non-resident general partners and non-resident managing agents to amend their Form ADV–NR within 30 days whenever any information contained in the form becomes inaccurate by filing with the Commission a new Form ADV–NR.[45] We did not receive any comments on this aspect of the proposal and are adopting it as proposed. The current form does not specify when a new Form ADV–NR must be filed with the Commission when the information on a filed Form ADV–NR becomes inaccurate. We believe allowing non-resident general partners and non-resident managing agents 30 days to file a new form provides sufficient time for the filings to be made—without imposing an undue burden on filers—and will help ensure that the Commission has accurate mailing information with which to contact filers.

As proposed, the final rules also will provide that Form ADV–NR is considered filed with the Commission upon acceptance by the IARD.[46] As proposed, the final rules will provide that no fee shall be assessed for filing Form ADV–NR through IARD.[47] The final rules will specify that each Form ADV–NR (and any amendment to Form ADV–NR) required to be filed under the rule is a ''report'' within the meaning of section 204 and 207 of the Advisers Act.[48] These requirements are similar to those provided for in [17 CFR 275.203–2] (''rule 203–2'') for [17 CFR 279.2] (''Form ADV–W'') and are intended to provide specificity to filers regarding their filing obligations.

C. Rule 13f–1 and Form 13F

Section 13(f) of the Exchange Act, in pertinent part, requires a manager to file a report with the Commission if the manager exercises investment discretion with respect to accounts holding certain

[34] Current 17 CFR 275.0–4(g) will be removed and reserved.

[35] *See* 2008 IC Applications Release, *supra* footnote 12.

[36] *See* ICI Comment Letter; Proposing Release, *supra* footnote 2, at sections II.A.3 and III.

[37] *See* 17 CFR 275.0–4(b) and 17 CFR 270.0–2(b).

[38] Section 211(a) of the Advisers Act authorizes the Commission to collect the information required by Form ADV–NR. There is precedent to requiring persons other than the adviser to file a form through IARD. Independent public accountants must file [17 CFR 279.8] (''Form ADV–E'') through IARD. *See* 17 CFR 275.206(4)–2(a)(4) and 17 CFR 279.8. We also are adopting conforming technical amendments to the General Instructions of Form ADV and to Form ADV–NR that describe the electronic filing requirements. *See* 17 CFR 275.203–1; 17 CFR 279.4; and General Instructions to Form ADV.

[39] *See* Form ADV–NR.

[40] *See* Form ADV–NR, General Instructions to Form ADV, 17 CFR 275.203–1(d)(3), and 17 CFR 279.4, which, as proposed, will provide that Form ADV–NR must be filed and amended pursuant to rule 203–1 (application for investment adviser registration), thereby applying such filing and amending requirements in rule 203–1 to non-resident general partners and non-resident managing agents of exempt reporting advisers.

[41] *See* ICI Comment Letter; Proposing Release, *supra* footnote 2, at section II.A.4 and III.

[42] *See* Form ADV–NR.

[43] As discussed in the Proposing Release, the Commission currently makes Form ADV–NR publicly available by posting an update to EDGAR indicating that the Commission received a Form ADV–NR filing. Members of the public can view such updates by searching for an adviser, and can use the information in the update to request the Form ADV–NR through a Freedom of Information Act (''FOIA'') request. *See* Proposing Release, *supra* footnote 2.

[44] Persons filing Form ADV–NR in paper format must follow the requirements of final rule 0–4, which we are amending to require that the Secretary of the Commission be the designated addressee of paper submissions, as discussed in section II.A of this Release. *See* 17 CFR 275.203–1(d)(3), 17 CFR 279.4, and Form ADV.

[45] *See* 17 CFR 275.203–1(d)(2) and 17 CFR 279.4.

[46] *See* 17 CFR 275.203–1(d)(4) and 17 CFR 279.4.

[47] *See* 17 CFR 275.203–1(d)(5) and 17 CFR 279.4.

[48] *See* 17 CFR 275.203–1(d)(6) and 17 CFR 279.4. Advisers Act section 207 provides that it shall be unlawful for any person willfully to make any untrue statement of a material fact in any registration application or report filed with the Commission under section 203 or 204, or willfully to omit to state in any such application or report any material fact which is required to be stated therein.

equity securities (''13(f) Securities'') having an aggregate fair market value on the last trading day of any month of any calendar year of at least $100 million.[49] The Commission has rulemaking authority under section 13(f) to determine, among other things, the format and frequency of the reporting requirements and the information to be disclosed in each report.[50] In exercising its authority under section 13(f), section 13(f)(5) requires that the Commission ''determine (and so state) that its action is necessary or appropriate in the public interest and for the protection of investors or to maintain fair and orderly markets.'' [51] The Commission also is required to consult with other agencies, including Federal, State and self-regulatory organizations.[52]

Section 13(f) was designed to increase the public availability of information regarding the securities holdings of managers, to consolidate the information with the Commission as a central repository of the data, and to facilitate consideration of the influence and impact of managers on the maintenance of fair and orderly securities markets and the public policy implications of that influence and impact.[53] To implement the institutional investment disclosure program mandated by Congress in section 13(f), the Commission adopted rule 13f–1 and related Form 13F under the Exchange Act.[54] Rule 13f–1 requires managers that exercise discretion over accounts holding 13(f) Securities having an aggregate fair market value of at least $100 million on the last trading day of any month of any calendar year to file quarterly reports of 13(f) Securities holdings with the Commission on Form 13F.[55] Form 13F is required to be filed on EDGAR in a custom XML structured data language created specifically for Form 13F.[56]

Section 13(f) mandates that the Commission disseminate the information appearing in the quarterly reports to the public.[57] Congress recognized that, in some instances, public disclosure of certain types of information could have harmful market effects.[58] Thus, Section 13(f) of the Exchange Act authorizes the Commission, as it determines to be necessary or appropriate in the public interest or for the protection of investors or to maintain fair and orderly markets, to delay or prevent public disclosure of certain Form 13F information in accordance with the FOIA, which is referred to in this release as ''commercial'' information. Section 13(f) also explicitly prohibits the Commission from disclosing to the public any reported personal information that identifies the securities held by the account of a natural person or an estate or trust, other than a business trust or an investment company, which is referred to in this release as ''personal'' information.[59]

Confidential treatment for personal information, as specified in section 13(f)(4), is required for an indefinite time period if public disclosure would identify the securities held by the account of a natural person, an estate, or a trust (other than a business trust or an investment company).[60] The Commission, however, does have discretion to determine whether to grant confidential treatment requests for commercial information in accordance with section 13(f), rule 24b–2, and the FOIA.[61] The Commission provided delegated authority to the Division of Investment Management to grant, deny, or revoke a grant of confidential treatment for any application for confidential treatment that is filed under Exchange Act section 24(b) and rule 24b-2 thereunder for confidential treatment of information filed pursuant to Exchange Act section 13(f) and rule 13f–1.[62]

Currently, a manager seeking confidential treatment must file multiple lists of securities. First, it must electronically file via EDGAR a public Form 13F that identifies the securities that are required to be publicly disclosed under section 13(f) and rule 13f–1, excluding, if applicable, any security(ies) for which it is requesting confidential treatment. Second, it must file a paper 13(f) Confidential Treatment Request that includes both: (i) a separate, non-public Form 13F for the same calendar quarter that lists any 13(f) Security(ies) for which the manager is requesting confidential treatment; and (ii) a supporting request letter to substantiate the substantive basis for confidential treatment. Third, following the submission of a commercial confidential treatment request, a manager must file an amendment(s) upon the expiration or denial of confidential treatment to disclose publicly any security(ies) for which confidential treatment was requested.[63] Furthermore, the 13(f) Confidential Treatment Requests, which are filed in paper, must be filed in quintuplicate with the Commission's Office of the Secretary.[64]

The Form requires 13(f) Confidential Treatment Requests to include the Form 13F reporting information for which the manager requests confidential treatment, as well as factual support to enable the Commission to make an

[49] Section 13(f)(1) of the Exchange Act [15 U.S.C. 78m(f)(1)].

[50] *Id.; see also* Filing and Reporting Requirements Relating to Institutional Investment Managers, Release No. 34–15461 (Jan. 5, 1979), at 1 (''13F Quarterly Reporting Release'').

[51] 15 U.S.C. 78m(f)(5).

[52] *Id.* The Commission consulted with other agencies as part of the initial proposal of these amendments in 2020. *See* Reporting Threshold for Institutional Investment Managers, Release No. 34–89290 (July 10, 2020) [85 FR 46016 (July 31, 2020)] (''2020 Form 13F Proposal'').

[53] *See* Filing and Reporting Requirements Relating to Institutional Investment Managers, Release No. 34–14852 (July 31, 1978) (citing to the Securities Acts Amendments of 1975: Report of the Committee on Banking, Housing and Urban Affairs United States Senate to Accompany S. 249, 94th Cong., 1st Sess. (S. Report No. 94–75) (1975), at 85 (''1975 Amendments Senate Report'')).

[54] *Id.*

[55] *See* section 13(f) of the Exchange Act [15 U.S.C. 78m(f)] and rule 13f–1 thereunder [17 CFR 240.13f–1]; *see also* 13F Quarterly Reporting Release, *supra* footnote 50. The Form 13F reports must be filed within 45 days after the last day of such calendar year and within 45 days after the last day of each subsequent calendar quarter. If two or more managers exercise investment discretion with respect to the same securities, only one of the managers is required to include information regarding such securities in its reports on Form 13F–HR. The other manager(s) are required to file a Form 13F notice report on Form 13F–NT stating the name of the other manager(s) reporting on their behalf.

[56] Adoption of Updated EDGAR Filer Manual, Release No. IC–30515 (May 14, 2013) [78 FR 29616 (May 21, 2013)] (''EDGAR Filer Manual Release'').

[57] *See* section 13(f)(4) of the Exchange Act [15 U.S.C. 78m(f)(4)].

[58] 1975 Amendments Senate Report, *supra* footnote 53.

[59] *See* sections 13(f)(4) and (5) of the Exchange Act [15 U.S.C. 78m(f)(4)] [15 U.S.C. 78m(f)(5)]; *see also* rule 24b–2(b)(2) under the Exchange Act [17 CFR 240.24b–2]; *see generally* Freedom of Information Act [5 U.S.C. 552]. The Commission amended the instructions to Form 13F pertaining to confidential treatment requests to state the procedural and substantive criteria that such requests must satisfy before they may be granted. *See* Requests for Confidential Treatment of Information Filed by Institutional Investment Managers, Release No. 34–15979 (July 6, 1979) (''1979 Confidential Treatment Amendments'').

[60] Section 13(f)(4) of the Exchange Act [15 U.S.C. 78m(f)(4)]; *see also* Requests for Confidential Treatment Filed by Institutional Investment Managers, Exchange Act Release No. 21539 (Dec. 4, 1984).

[61] *See* Proposing Release, *supra* footnote 2, at n.69.

[62] *See* rule 30–5(c–1)(1) and (2) of the Commission's organizational rules [17 CFR 200.30–5].

[63] *See* instruction 2.g for Confidential Treatment Requests on Form 13F. A manager may need to file multiple amendments in connection with a 13(f) Confidential Treatment Request, such as when the expiration or denial of confidential treatment occurs at different quarterly intervals for different holdings. For example, the period of confidential treatment for open risk arbitrage holdings typically varies between three, six, nine, or twelve months, based on different completion or termination dates for a proposed merger or acquisition.

[64] *See* rule 24b–2 under the Exchange Act [17 CFR 240.24b–2]; *see also* Instructions for Confidential Treatment Requests on Form 13F.

informed judgment as to the merits of the request.[65] The manager also must submit a public filing of Form 13F that lists the manager's quarter-end holdings, and, when confidential treatment is requested, indicates that the confidential portion of the Form 13F has been omitted and filed separately with the Commission.[66] These types of paper confidential treatment request submissions are subject to a time-consuming, manual receipt and distribution process within the Commission that could lead to undue procedural delay and increase the time that the information receives *de facto* confidential treatment while the staff processes a 13(f) Confidential Treatment Request.[67] These challenges were highlighted during the COVID–19 pandemic that resulted in delays in receiving paper filings and, ultimately, in granting or denying 13(f) Confidential Treatment Requests filed with the Commission in paper.[68]

1. Electronic Filings of 13(f) Confidential Treatment Requests

a. Amendments to Form 13F

We are adopting, as proposed, amendments to Form 13F and related rules under the Exchange Act and Regulation S–T that will require managers to file requests for confidential treatment electronically via EDGAR.[69] Thus, under the amendments, the 13(f) Confidential Treatment Requests that filers currently submit to the Commission in paper, typically through the mail or by express delivery, will be required to be submitted electronically via EDGAR.

Two commenters supported the proposal to require 13(f) Confidential Treatment Requests to be filed electronically[70] and one of these commenters stated that submitting these requests on paper can be time-consuming and, at times, may be operationally challenging (*e.g.,* during 2020 as a result of COVID–19).[71] These commenters agreed that electronic filings would relieve the burdens on managers of sending paper 13(f) Confidential Treatment Requests to the Commission. One of these commenters also stated that this proposal would save time, energy and money for filers and result in more efficient and secure filings.[72]

Additionally, one commenter specifically supported using EDGAR for 13(f) Confidential Treatment Requests and agreed that using the same filing system for both Form 13F and 13(f) Confidential Treatment Requests would be less burdensome for managers than requiring managers to use a different system for each filing.[73] This commenter also stated that 13(f) Confidential Treatment Requests, including the justifications and related holdings information, should not be included on or attached to the publicly filed Form 13F, but should be filed as a separate file to provide the best protection against inadvertent publication by the filer or the Commission. Finally, this commenter supported electronic communication of the Commission's decisions pertaining to 13(f) Confidential Treatment Requests because providing electronic communication through both means (via EDGAR and email) would provide the best chance for the communication to be properly sent and received.

We continue to believe that requiring electronic filing of 13(f) Confidential Treatment Requests via EDGAR will provide significant benefits to managers and will both further the goals of section 13(f) (as noted above) and assist and expedite the Commission's review of such requests.[74] As commenters observed, requiring 13(f) Confidential Treatment Requests to be filed on EDGAR, rather than an alternative system, would be less burdensome for managers that are already familiar with the process of making filings on EDGAR, and will allow the Commission to review all of a manager's holdings more efficiently since both public and confidential holdings will be filed on a single system. Additionally, as we stated in the Proposing Release, and one commenter agreed, 13(f) Confidential Treatment Requests should be filed as a separate, non-public filing from a manager's public Form 13F filing to avoid inadvertent public disclosure of confidential holdings.[75] Finally, the Commission will communicate its decisions pertaining to 13(f) Confidential Treatment Requests consistent with current practice and the requirements of rule 24b–2 and the Commission's Rules of Practice.[76] Therefore, we are adopting as proposed the three amendments to Form 13F described in more detail below.[77]

• *Instructions for Confidential Treatment Requests.* We are amending the instructions to require that a 13(f) Confidential Treatment Request be filed electronically. Such requests will be made electronically via EDGAR as a separate, non-public filing.[78] Requests also must include a confidential Form 13F report that is limited to the 13(f) Securities holdings for which the manager is requesting confidential

[65] *See* Instructions for Confidential Treatment Requests on Form 13F; *see also* 1979 Confidential Treatment Amendments, *supra* footnote 59 (stating that requests for confidential treatment should not be broad in scope or conclusory in nature and stating that confidential treatment requests can be granted only to managers who make an affirmative showing that they satisfy the standards of section 13(f)(4)).

[66] *See* rule 24b–2(b) under the Exchange Act [17 CFR 240.24b–2].

[67] *See* Proposing Release, *supra* footnote 2 at n.75 (stating that a manager that submits a 13(f) Confidential Treatment Request receives *de facto* confidential treatment between the time a 13(f) Confidential Treatment Request is received and when the subject holdings are made public in an amendment to the requestor's public Form 13F report following either (i) a denial of a 13(f) Confidential Treatment Request, or (ii) the expiration of confidential treatment).

[68] Staff sought to mitigate these delays by, among other things, responding to questions regarding the electronic submission of such requests through a secure file transfer service. *See* Division of Investment Management Coronavirus (COVID–19) Response FAQs, *available at https://www.sec.gov/investment/covid-19-response-faq* (stating that filers should contact the staff for questions regarding whether 13(f) Confidential Treatment Requests could be submitted electronically). The FAQs represent the views of the staff of the Division of Investment Management. They are not a rule, regulation, or statement of the Commission. The Commission has neither approved nor disapproved their content. The FAQs, like all staff statements, have no legal force or effect: they do not alter or amend applicable law, and they create no new or additional obligations for any person.

[69] *See* amendments to rule 24b–2(i) under the Exchange Act; *see also* amendments to Form 13F Instructions for Confidential Treatment Requests; *see also* new rule 101(a)(1)(xxii) and amendments to rule 101(d) of Regulation S–T.

[70] PIC Comment Letter; ICI Comment Letter.

[71] ICI Comment Letter (this commenter also requested additional amendments outside the scope of this rulemaking, such as requiring electronic filing of confidential treatment requests under other rules of the Investment Company Act).

[72] PIC Comment Letter.

[73] PIC Comment Letter (also supporting giving filers the choice of using HTML or ASCII filing formats, but stating that there is no material difference in time or expense between the two).

[74] *See* Proposing Release, *supra* footnote 2, at nn. 79–84 and accompanying text (also stating that electronic filing of 13(f) Confidential Treatment Requests could reduce the period of *de facto* confidential treatment that accrues pending review and thus ultimately allow for the quicker public dissemination of Form 13F holdings information consistent with the purpose of section 13(f), thereby enhancing the availability of public information about managers' holdings of 13(f) Securities).

[75] *See* Proposing Release, *supra* footnote 2, at text following n.150.

[76] *See* rule 24b–2(d) under the Exchange Act [17 CFR 240.24b–2(d)]; *see also* 17 CFR 201.431.

[77] In addition to the changes described above, Form 13F's Paperwork Reduction Act Information section will also be modified to remove duplicative information on the form relating to the form's burdens and to update certain citations to section 13(f) of the Exchange Act. *See* amendments to Paperwork Reduction Act Information section of Form 13F.

[78] The attached request must also include the period of time for which confidential treatment is requested, and a justification of such requested period of confidential treatment, as required by rule 24b–2(b)(2) under the Exchange Act [17 CFR 240.24b–2(b)(2)]. *See* Instruction 2(e) for Confidential Treatment Requests of Form 13F.

treatment. The changes to the Instructions for Confidential Treatment Requests will also provide updated references to new paragraph (i) of rule 24b–2.[79]

- *Summary Page.* As proposed, the summary page will include all the same information currently required but will be amended to require a manager seeking confidential treatment to indicate if confidential treatment is being requested for some or all of the manager's holdings for the quarter-end period.[80]
- *Special Instructions.* As proposed, new Special Instruction 6(d) will require managers to identify on the Summary Page if confidential treatment is being requested for some or all of the manager's holdings for the quarter-end period.[81]

b. Amendments to Rule 24b–2

We are adopting as proposed amendments to rule 24b–2 to include an additional paragraph governing the filing of confidential information required by section 13(f) of the Exchange Act.[82] New paragraph (i) will require that managers request confidential treatment electronically for any material required to be reported on Form 13F and continue to omit the confidential portion from the materials required to be reported.

c. Amendments to Regulation S–T

As proposed, we are amending Regulation S–T in connection with the mandatory electronic submission of 13(f) Confidential Treatment Requests. Rule 101(a) will be amended to add 13(f) Confidential Treatment Requests to the list of mandated electronic filings.[83] Additionally, 13(f) Confidential Treatment Requests will be added to the list of requests for confidential treatment required to be submitted in electronic format in rule 101(d).[84]

2. Other Amendments to Form 13F

a. Additional Identifying Information and Optional Use of FIGI

We are adopting, as proposed, amendments to Form 13F that will require filers to provide additional identifying information. These amendments will require each Form 13F filer to provide its Central Registration Depository number (''CRD number'') and SEC file number, if any.[85] If a manager is filing a Form 13F notice report on Form 13F–NT, the manager must include the CRD number and SEC file number, if any, of any other manager included in the ''List of Other Managers Reporting for this Manager'' table on the cover page.[86] Additionally, as discussed in more detail below, we are adopting an amendment to Form 13F that would allow managers to disclose, for each security reported on Form 13F, the security's FIGI in addition to its CUSIP number.[87]

One commenter supported the proposed amendments to require managers to provide additional identifying information, including their CRD and SEC file numbers, if any. The commenter agreed that this information would allow the Commission and other consumers of Form 13F data to more easily identify a Form 13F filer's other regulatory filings and the interrelationships between managers who share investment discretion over 13(f) Securities.[88] The commenter also stated its belief that disclosing this information would not be unduly burdensome for 13F filers.[89] Another commenter opposed this requirement, stating that the commenter did not see the need for filers to provide additional identifying information and adding that such a change could be burdensome for managers that have numerous related parties or sub-advisers.[90]

We are adopting these amendments as proposed because these requirements will allow the Commission, investors, and other market participants to identify interrelationships between managers as well as a manager's other regulatory filings efficiently without undue burden. In particular, we believe the additional burdens associated with identifying numerous managers and sub-advisers, as one commenter raised,[91] are not significant because the required identifying information is easily accessible to the reporting manager and we anticipate that managers could transmit and store this information easily using their existing systems. Furthermore, we believe that any additional burden associated with this requirement is justified because it will allow the Commission, investors, and other market participants to more easily identify the interrelationships among these numerous managers.[92] We also believe that these amendments are consistent with the Commission's obligations under section 13(f)(4) to tabulate information contained in Form 13F reports in a manner that would ''maximize the usefulness of the information to other Federal and State authorities and the public.'' [93]

We also are modifying the proposal to provide managers flexibility to report an additional security identifier, specifically by permitting, but not requiring, the use of FIGI in addition to CUSIP. The Proposing Release requested comment on whether the Commission should allow managers to provide other security identifiers in addition to, or in lieu of, the CUSIP, such as the FIGI.[94] Commenter responses were mixed. One commenter opposed a change to the CUSIP requirement because such a change would be burdensome and less

[79] *See* amendments to Form 13F. Additionally, as proposed, Instruction 2.e. will be amended to require the manager to ''provide justification for'' the period of time for which confidential treatment of the securities holdings is requested. Instruction 4 also will be amended to state that a manager must also submit electronically its updated Form 13F at the expiration of the time period for which a manager requested confidential treatment or earlier, *e.g.,* upon the denial of the 13(f) Confidential Treatment Request. Conforming amendments will be made to Instruction 2.e. to implement the changes to Instruction 4.

[80] *See* Summary Page of Form 13F; *see also* Special Instruction 6(d) of Form 13F (requiring managers to indicate on the Form 13F summary page whether confidential treatment is being sought for some or all of the manager's holdings for the quarter-end period and to file the 13(f) Confidential Treatment Request in a separate submission).

[81] We also are amending current Special Instruction 13 to remove the EDGAR filing type designation and revise current Special Instruction 13 to state that filers can consult the Commission's EDGAR Filer Manual for filing instructions. *See* Special Instruction 12 of Form 13F. Current Special Instruction 13 of Form 13F will be renumbered to Special Instruction 12.

[82] *See* new rule 24b–2(i) under the Exchange Act.

[83] *See* new rule 101(a)(1)(xxii) of Regulation S–T.

[84] *See* amendments to rule 101(d) of Regulation S–T. We are also making non-substantive conforming edits to rules 101(a)(1)(xxi) and conforming edits to rule 101(a)(3) of Regulation S–T.

[85] *See* amendments to Special Instruction 4 of Form 13F. Current Special Instruction 5 will be renumbered to Special Instruction 4 of Form 13F.

[86] *See supra* footnote 55 (noting that a manager can make a Form 13F–NT filing if all the securities for which the manager has investment discretion are reported by another manager). Similarly, if a manager's Form 13F–HR reports the holdings of managers other than the reporting manager, the reporting manager will be required to include the CRD number and SEC file number of those other managers in the ''List of Other Included Managers'' on the cover page. *See* new Special Instruction 7 of Form 13F. Current Special Instruction 8 would be renumbered to Special Instruction 7 of Form 13F.

[87] *See* amended Special Instruction 11(b)(iii) and column 3 of the Information Table of Form 13F. Current Special Instruction 12 will be renumbered to Special Instruction 11 of Form 13F. A manager will have the option of reporting a FIGI in addition to a CUSIP number for some or all of its 13(f) Securities.

[88] WhaleWisdom Comment Letter.

[89] WhaleWisdom Comment Letter.

[90] *See* Comment Letter of the Investment Adviser Association (Dec. 17, 2021) (''IAA Comment Letter'') (also stating that managers would need to adapt their operations to obtain CRD numbers and SEC file numbers from the other managers identified in their 13F reports and keep track of the new sets of numbers).

[91] IAA Comment Letter.

[92] *See also* WhaleWisdom Comment Letter.

[93] *See* Proposing Release, *supra* footnote 2, at text accompanying n.104.

[94] *See* Proposing Release, *supra* footnote 2, at text accompanying n.105.

useful than the CUSIP.[95] Another commenter supported providing managers with the option to use either CUSIP or an alternative identifier because of the licensing practices, fees and obligations related to CUSIP.[96] Additionally, one commenter supported permitting managers to provide other identifiers such as FIGI for each security because the commenter believes that there is a need for a free open unique identifier for every security.[97]

While the final rules will maintain the requirement to disclose CUSIP, we are persuaded by commenters that providing the flexibility of reporting an additional security identifier, along with CUSIP, would be appropriate.[98] CUSIP numbers and FIGIs are both able to provide the unique identification of a reported security in a manner that is standard across datasets.[99] Managers choosing to report using FIGI would provide the share class level FIGI which, like CUSIP, is standard across exchanges.[100] We believe that providing managers with the option of reporting a FIGI, in addition the mandatory CUSIP number, for some or all of the manager's 13(f) Securities would enhance the utility of holdings data reported on Form 13F and the usefulness of such information to the Commission, other regulators, or members of the public and other market participants by allowing analysis based on FIGI where managers choose to report that identifier. For example, investors who analyze holdings data reported on Form 13F and that use FIGIs in their internal analyses could use the reported FIGIs without having to first convert a security's CUSIP number to a FIGI.

By contrast, under the final rules we are not amending the form to allow a manager to report the corresponding LEI of the issuer of such security as one commenter suggested.[101] Because an LEI is an identifier of legal entities (such as issuers of 13(f) Securities), rather than an identifier of securities, it would not provide comparable information to a CUSIP number or a FIGI.[102]

b. Instructions for Confidential Treatment Requests

We are adopting as proposed an amendment to the instructions on Form 13F for 13(f) Confidential Treatment Requests to require managers seeking confidential treatment for information contained in Form 13F to demonstrate that the information is customarily and actually kept private by the manager and that failure to grant the request for confidential treatment would be likely to cause harm to the manager.[103] We did not receive comments on this proposed amendment. This amendment will conform our instructions to a June 2019 U.S. Supreme Court decision that overturned the standard for determining whether information is ''confidential'' under Exemption 4 of the FOIA on which the current instruction is based.[104]

c. Technical Amendments to Form 13F

We are also adopting as proposed certain technical amendments to Form 13F designed to account for the change in the required format of Form 13F submissions from the plain-text ASCII format to the XML-based structured data language in 2013.[105] Specifically, we are adopting amendments to simplify the rounding conventions of Form 13F by requiring all dollar values listed on Form 13F to be rounded to the nearest dollar, rather than to the nearest one thousand dollars as is currently required.[106] Additionally, we are adopting amendments to remove the requirement that filers, when reporting dollar values on Form 13F, omit the ''000.'' [107] Furthermore, the amendments will remove the 80 character limit imposed on the information filers can include on the cover page and the summary page and the 132 character limit on the information table.[108] Finally, the amendments will remove duplicative definitions and streamline certain sections to simplify Form 13F's instructions.[109]

Two commenters supported requiring filers to round all dollar values listed on Form 13F to the nearest dollar and remove the requirement to omit ''000.'' [110] One of these commenters observed that the rounding requirement has caused inconsistencies in filings, and added that incorrect or inconsistent rounding is one of the most common filing errors on Form 13F because many filers already round to the nearest dollar.[111] Conversely, one commenter opposed the changes to the rounding conventions of the form because the commenter is not aware of data inaccuracies resulting from current reporting requirements and therefore believes that the implementation costs to change the conventions would outweigh any marginal benefit from these changes.[112]

As we noted in the Proposing Release, our staff has observed instances of data errors resulting from incorrect rounding.[113] Additionally, we continue to believe that these amendments will enhance the accuracy of the data provided on Form 13F and make it easier to understand and use, both for the Commission and for the public.

[95] ABA and CUSIP Comment Letter.

[96] IAA Comment Letter.

[97] WhaleWisdom Comment Letter (also recommending allowing only one security identifier and using a free identifier such as the legal entity identifier, which is already used in N–PORT filings, as an alternative to FIGI).

[98] Section 13(f)(1) requires managers to publicly disclose certain information regarding the manager's 13(f) Securities, including the CUSIP number of each security.

[99] FIGI is an open-sourced, non-proprietary, data standard for the identification of financial instruments across asset classes, including all 13(f) Securities. FIGI allows users to link various identifiers for the same security to each other, which includes mapping the FIGI of a security to its corresponding CUSIP number. *See* Object Management Group Standards Development Organization, Financial Instrument Global Identifier, *available at https://www.omg.org/figi/*.

[100] *See* About OpenFigi, *available at https://www.openfigi.com/about* (stating that the Share Class level FIGI is assigned to equities and enables users to link multiple FIGIs for the same instrument in order to obtain an aggregated view for that instrument across all countries globally).

[101] *See supra* footnote 96.

[102] *See* Introducing the Legal Entity Identifier (LEI), *available at https://www.gleif.org/en/about-lei/introducing-the-legal-entity-identifier-lei* (stating that the LEI ''connects to key reference information that enables clear and unique identification of legal entities participating in financial transactions'').

[103] *See* amendments to Instruction 2.d for Confidential Treatment Requests of Form 13F. As is currently required under this instruction, the amendments will continue to require managers to show what use competitors could make of the information and how harm to the manager could ensue.

[104] 5 U.S.C. 552(b)(4). *See Food Marketing Institute* v. *Argus Leader Media,* 139 S.Ct. 2356 (2019) (''Food Marketing v. Argus Leader'') (stating that ''[a]t least where commercial or financial information is both customarily and actually treated as private by its owner and provided to the government under an assurance of privacy, the information is 'confidential' within the meaning of Exemption 4'').

[105] *See* Proposing Release, *supra* footnote 2, at n.113.

[106] *See* amendments to Special Instruction 8 of Form 13F. Current Special Instruction 9 would be renumbered to Special Instruction 8.

[107] *See* Proposing Release, *supra* footnote 2, at text accompanying n.116 (stating that, as a space saving measure, current Form 13F instructs filers to omit the ''000'' and thus, for example, report a security with a value of $5 million as $5,000. Since column width is no longer an issue with the structured XML-based data language, this change will reduce filer mistakes and data inaccuracies).

[108] These character limits are imposed by 17 CFR 232.305 [rule 305 of Regulation S–T].

[109] *See* amendments to General Instruction 3. We are also deleting Special Instruction 2 and renumber the remainder of the Special Instructions accordingly. Additionally, we are amending newly renumbered Special Instructions 2, 6, 7, and 10 of Form 13F. Finally, we are streamlining the discussion in the Paperwork Reduction Act Section of Form 13F.

[110] WhaleWisdom Comment Letter; ICI Comment Letter.

[111] WhaleWisdom Comment Letter.

[112] IAA Comment Letter.

[113] *See* Proposing Release, *supra* footnote 2, at text accompanying n.120.

Moreover, we believe the costs associated with these amendments will be limited and any additional costs associated with these amendments will be justified by the enhanced accuracy of Form 13F data. Therefore, we are adopting the technical amendments to Form 13F described above as proposed.[114]

D. Effective and Compliance Dates

We are adopting largely as proposed a six-month transition period to give advisers, applicants, and managers sufficient time to modify their procedures to implement the new rule requirements with regard to submitting applications for exemption under the Advisers Act and for filing Form ADV–NR. The transition period will also give an adequate period of time for managers and other service providers to conduct the requisite operational changes to their systems and to establish internal processes to comply with the new electronic filing requirements of 13F Confidential Treatment Requests and implement the other amendments to Form 13F. We received no comment on the proposed transition period.

Therefore, for the amendments related to Advisers Act Applications, Form ADV–NR, and the electronic filing requirements of 13F Confidential Treatment Requests, we are adopting a compliance date of six months after these amendments' effective date as proposed. With respect to the amendments to Form 13F, the Commission is delaying the effective date of those amendments until January 3, 2023.[115] We believe it is important that all managers begin reporting on the amended version of Form 13F simultaneously in order to maintain the consistency of the data reported on Form 13F during the transition period. This approach would also allow the Commission and other users of Form 13F data to more efficiently identify the point in time in which a manager begins using the amended Form 13F.

III. Other Matters

Pursuant to the Congressional Review Act, the Office of Information and Regulatory Affairs has designated these rules as not a ''major rule'' as defined by 5 U.S.C. 804(2). If any of the provisions of these rules, or the application thereof to any person or circumstance, is held to be invalid, such invalidity shall not affect other provisions or application of such provisions to other persons or circumstances that can be given effect without the invalid provision or application.

IV. Economic Analysis

A. Introduction and Primary Goals of the Regulations and Form Amendments

The Commission is sensitive to the potential economic effects of the final amendments to the rules and form that include, among other things, making mandatory the electronic submission of applications for orders under the Advisers Act and 13(f) Confidential Treatment Requests, and harmonizing the requirements for electronic submission of applications for orders under the Advisers Act and the Investment Company Act (collectively, the ''final amendments''). The economic effects include the potential benefits and costs of the final amendments, as well as any effects on efficiency, competition, and capital formation.[116]

The Commission is adopting amendments to facilitate the efficient submission of applications for orders under the Advisers Act and requests for confidential treatment; to improve the Commission's ability to track and process such filings; to reduce burdens and inefficiencies associated with paper submissions; to allow for quicker dissemination of information to the public; to provide managers with more flexibility in identifying 13(f) Securities; and to modernize the Commission's records management processes.

With respect to the filing of applications for orders under the Advisers Act, the final amendments will:

- Require electronic submission of applications for orders under the Advisers Act;
- Designate EDGAR as the filing system for electronic submission;
- Eliminate the requirement to file proposed notices as exhibits to applications;
- Eliminate the requirement that applications be notarized and certain other technical requirements;
- Make temporary hardship exemptions unavailable for applications for orders under the Advisers Act;
- Designate the Secretary of the Commission as the addressee of any remaining paper submissions under Investment Company Act rules 0–2 and 0–4.

With respect to filing 13(f) Confidential Treatment Requests and Form 13F, the final amendments will:

- Require electronic submission of 13(f) Confidential Treatment Requests listing all 13(f) Securities and managers' objection to public disclosure of certain holdings in accordance with the requirements set forth in rule 24b–2 under the Exchange Act;
- Designate EDGAR as the filing system for electronic submissions of 13(f) Confidential Treatment Requests;
- Require that filers include additional identifying information on their Form 13F filings;
- Require all dollar values listed on Form 13F to be rounded to the nearest dollar, remove the requirement that dollar values list on Form 13F omit the ''000,'' and remove character limits on the cover, the summary page, and the information table of Form 13F;
- Allow managers to disclose, for any security reported on Form 13F, the security's FIGI in addition to its CUSIP number.
- Eliminate duplicative definitions and streamline certain sections to simplify Form 13F's instructions.

In addition, we are adopting final amendments as proposed requiring that Form ADV–NR, which is currently filed in paper, be filed electronically through the IARD system. Some of the amendments we are adopting are technical in nature and we do not expect them to have significant economic effects.[117]

We have sought, where possible, to quantify the economic effects of the final amendments. However, the effects of the final amendments depend on a number of factors, some of which we cannot quantify, such as the value to

[114] The Commission has determined that the amendments to Form 13F are appropriate in the public interest and for the protection of investors. *See supra* footnote 51 and accompanying text.

[115] A manager must use the amended Form 13F for any filing made after the amendments become effective, regardless of whether the manager is filing an initial quarterly report on Form 13F or an amendment to a previously filed Form 13F filing.

[116] Section 3(f) of the Exchange Act, section 2(c) of the Company Act, and section 202(c) of the Advisers Act provide that when engaging in rulemaking that requires the Commission to consider or determine whether an action is necessary or appropriate or consistent with the public interest, to also consider, in addition to the protection of investors, whether the action will promote efficiency, competition, and capital formation. Section 23(a)(2) of the Exchange Act also requires the Commission to consider the effect that the rules would have on competition, and prohibits us from adopting any rule that would impose a burden on competition not necessary or appropriate in furtherance of the Exchange Act.

[117] Specifically, we do not believe that the following changes will have significant economic effects as they are likely to result in minimal costs or benefits with respect to the filing of applications for orders under the Advisers Act: (1) removal of the reference to microfilming; (2) changing the wording related to duplicate original copies of paper applications. In addition, we do not believe that requiring non-resident general partners and non-resident managing agents to amend their Form ADV–NR within 30 days whenever any information in the form becomes inaccurate by filing with the Commission a new Form ADV–NR will have significant economic consequences as they are likely to result in minimal costs or benefits.

different market participants of the uses of information contained in the 13(f) Confidential Treatment Requests. Therefore, some of the discussion below is qualitative in nature.

B. Economic Baseline

The economic baseline, from which we measure the final amendments' likely economic effects, reflects current regulatory practice as it pertains to potential applicants for orders under the Advisers Act, filers of Form ADV–NR, and managers required to file Form 13F. In this section, we describe each of these baseline components.

The final amendments with respect to applications for orders under the Advisers Act will affect applicants seeking such orders, applicants who may seek similar orders in the future, clients of applicants, investors in funds managed by applicants, and the Commission. Applicants can include registered investment advisers, exempt reporting advisers, and persons not registered with the Commission, but who meet the definition of investment adviser under the Advisers Act, among others. As of December 31, 2021, there were approximately 14,815 registered investment advisers and 5,074 exempt reporting advisers.[118] In addition, as of December 31, 2021, there were approximately 17,307 state-registered advisers and an unknown number of foreign private advisers, who, while not registered with the Commission, may seek to file applications for orders under the Advisers Act.[119]

In accordance with Advisers Act rules, applicants seeking an order from the Commission under the Advisers Act must submit their applications, as well as a proposed notice, in paper and in quintuplicate, to the Commission's mailroom for stamping and logging.[120] Applications are ultimately routed to the Commission's staff to manually upload into the EDGAR system, assign file numbers, and process for internal tracking purposes. Division staff also place the applications (including amendments, notices of applications, and the resulting orders) on the Commission's website.[121] These applications for orders available online may inform investors' decisions with respect to the selection or retention of investment advisers as well as investment decisions regarding funds managed by these advisers. In addition, applications for orders available online provide potential precedent to be consulted by future applicants. The table below describes the number of initial applications for orders under the Advisers Act and Investment Company Act by year over the last three calendar years as posted on the Commission website.[122] The table shows that initial applications for orders under the Advisers Act are uncommon relative to applications for orders under the Investment Company Act.

TABLE 1

	2018	2019	2020	Total
Advisers Act Initial Applications	3	7	18	28
Investment Company Act Initial Applications	97	70	104	271

We estimate that, under the baseline, the costs of submitting an application for an order under the Advisers Act range from $14,182 to $221,909.[123]

The final amendments will affect non-resident general partners and non-resident managing agents of investment advisers, who are currently required to file Form ADV–NR as a paper filing submission, as well as their investment advisers, who currently sign Form ADV–NR.[124] The Commission received 53 Form ADV–NR filings during calendar year 2019, 5 filings during calendar year 2020, and 4 filings during calendar year 2021. We estimate that it currently costs $75 to file Form ADV–NR.[125] These amendments will also affect the Commission to the extent the amendments alter how the Commission receives and processes Form ADV–NR filings.

The final amendments with respect to 13(f) Confidential Treatment Requests and Form 13F will affect managers who file Form 13F, the Commission, and users of Form 13F information, including investors and other market participants. The table below describes the number of Form 13F filings and 13(f) Confidential Treatment Requests by calendar year and shows that, over the three year period from 2018–2020, only 0.82% (585/71,424) of Form 13F filings included confidential treatment requests.

TABLE 2

	2018	2019	2020	Total
Form 13F filings	20,356	21,864	29,204	71,424
13(f) Confidential Treatment Requests	191	190	204	585

[118] We calculate these estimates using the last Form ADV filing for each adviser in the 15 months prior to Jan. 1, 2021. This allows us to exclude advisers that are technically still registered with the Commission but have not filed a Form ADV for their most recent fiscal year. We use the same approach in calculating statistics for exempt reporting advisers.

[119] Foreign private advisers do not file Form ADV. Therefore, the Commission does not have information on the number of foreign private advisers.

[120] *See supra* footnote 17 (describing Commission internal process for receiving and reviewing Advisers Act applications).

[121] The speed with which items are posted to the Commission's website depends on the availability of staff resources; *see also supra* section II.A.1.

[122] In order to avoid double counting, we do not include amended applications in our count of the number of initial applications filed each year.

[123] *See infra* note 1 of Table 3.

[124] *See supra* section II.B.

[125] *See infra* footnote 175.

Form 13F has provided researchers with additional means to study the impact of institutional investors on securities markets as well as the general value of portfolio disclosures.[126] Members of the public can easily access Form 13F information in a timely manner via the EDGAR system.

Currently, managers who are not requesting confidential treatment submit a single public Form 13F on EDGAR in a custom XML structured data language created specifically for Form 13F. Managers are required to round all dollar values listed on their Form 13F to the nearest one thousand dollars, to omit the corresponding ''000'' in such dollar values, and to limit the length of the information filers include on the form's cover and summary pages to 80 and 132 characters, respectively.

Managers requesting confidential treatment must submit the following documents[127]:

- A public Form 13F, filed electronically on EDGAR in a custom XML data language, that lists the 13(f) Securities for which the Manager is not seeking confidential treatment;
- A concurrent paper 13(f) Confidential Treatment Request that includes: (1) the non-public Form 13F holdings information for all 13(f) Securities for which the Manager requests confidential treatment, and (2) a written request that addresses the section 13(f) confidential treatment requirements and provides sufficient factual support to enable the Commission to make an informed judgment as to the merits of the request. Some managers submitted confidential treatment requests electronically via a secure file transfer service to mitigate delays in receiving paper filings during the events of COVID–19.[128]

We are not able to estimate precisely the aggregate cost of filing 13F Confidential Treatment Requests for two reasons.[129] First, the costs associated with filing a 13(f) Confidential Treatment Request may vary depending on the type of request, the level of complexity involved in providing an appropriate justification for the request, and the number of holdings subject to the request. Second, the costs may also vary depending on the level of a manager's sophistication and resources. For example, some managers may be able to file 13(f) Confidential Treatment Requests in-house, while others may rely heavily on outside counsel to assist them with their requests.

With respect to the identification of securities reported on Form 13F, under Section 13(f) of the Exchange Act, managers must identify each reported security with its CUSIP number.[130] In addition to Form 13F requirements, some managers are subject to other Commission requirements that require the reporting of CUSIP numbers.[131] The Commission does not currently require the use of FIGIs to identify securities on Form 13F or other forms.[132] Data users that subscribe to market data feeds that include FIGIs—such as data feeds provided by FINRA, NASDAQ, FactSet, Bloomberg, and FTSE—currently ingest FIGIs into their data systems.[133]

C. Economic Effects

This section discusses the benefits and costs of the final amendments, as well as their potential effects on efficiency, competition, and capital formation. Because some of the final amendments are technical in nature, they will not have significant economic effects. In addition, where certain benefits or costs of electronic filing apply to multiple final amendments, we discuss those benefits or costs together instead of repeating such discussion for each final amendment.

1. Benefits

Applications for orders under the Advisers Act, Form ADV–NR, and 13(f) Confidential Treatment Requests are all currently filed with the Commission as paper filings. The most significant effect of the final rule will be to require that these filings instead be submitted electronically. Electronic submission will increase the speed and accuracy with which Commission staff receives and initially processes submissions, potentially improving regulatory oversight.[134] The current process

[126] *See, e.g.,* Paul A. Gompers & Andrew Metrick, *Institutional Investors and Equity Prices,* 116 Q.J. Econ. 229 (2001); Zhen Shi, *The Impact of Portfolio Disclosure on Hedge Fund Performance,* 126 J. Fin. Econ. 36 (2017).

[127] In the 2020 Form 13F Proposal, a commenter stated that complying with the requirements to file a 13(f) Confidential Treatment Request can be particularly time consuming and costly. *See* Comment Letter of the Private Investor Coalition on File No. S7–08–20 (Sept. 3, 2020), *available at https://www.sec.gov/comments/s7-08-20/s70820-7734926-223067.pdf* (''Private Investor Coalition 2020 Form 13F Proposal Comment Letter'').

[128] *See supra* footnote 68.

[129] In 2019, the Commission received a total of 190 13(f) Confidential Treatment Requests (CTR), of which 132 were submitted based on the personal holdings exception in 13(f)(4); 41 were submitted based on risk arbitrage; and 17 were based on acquisition, disposition, or other. One commenter (*see supra* footnote 125) claimed that the annual cost of filing quarterly Forms 13F and 13(f) CTR for a typical single family office ranges from $20,000 to $40,000. This estimate includes single family office staff time and resources and outside advisers for the CTR filings. Since family offices do not file holdings, the Commission staff presumes that the entire $20,000–$40,000 to be associated with 13(f) CTR costs. Under the assumption that the commenter's claimed CTR costs for family offices are representative of the cost of filing for all filers, the Commission staff estimates the total cost of filing 13(f) CTRs to be $3.8 million–$7.6 million. For the low end of the range, this is calculated as $3.8 million = (132 + 41 + 17) * $20,000. For the high end of the range, this is calculated as $7.6 million = (132 + 41 + 17) * $40,000. This estimate likely understates the aggregate costs of filing 13(f) CTRs because single family offices typically request confidential treatment based on personal holdings exception, whereas other filers may need to justify their confidential treatment requests for each holding in a given 13(f) CTR. In addition, *see infra* section IV.D for discussion of estimated burdens associated with Form 13F under the Paperwork Reduction Act, which include the cost of filing 13(f) CTRs. Specifically, Table 6 estimates that, under the baseline, the current initial burden is $13,733,909 ($13,080,138 + $435,940 + $217,831) while it is expected to be $19,816,569 under the final amendments, implying estimated costs, for PRA purposes, of $6,082,660 = $19,816,569 − $13,733,909 associated with the final amendments to Form 13F.

[130] *See* Section 13(f)(1) of the Exchange Act [15 U.S.C. 78m(f)(1)], *supra* footnote 49; *see also* column 3 of the Information Table of Form 13F. CUSIP numbers are provided by CUSIP Global Services, a subsidiary of FactSet Research Systems Inc., a financial data company, under a license from the American Bankers Association, an industry association. *See CGS History,* CUSIP Global Servs., *available at https://www.cusip.com/about/history.html.* The use (*i.e.,* the access, storage, maintenance, processing or other use) of CUSIP numbers by most entities is subject to annual license fees. *See CGS License Structure for End User Customers, CUSIP Global Servs., available at https://www.cusip.com/services/license-fees.html#/licenseStructure.*

[131] For example, managers that disclose beneficial ownership of a security on Schedule 13D or Schedule 13G must identify that security with its CUSIP number. *See* 17 CFR 240.13d–101, 240.13d–102.

[132] FIGIs for 13(f) Securities are provided by Bloomberg L.P., a financial data company and competitor of FactSet Research Systems Inc., in its role as one of two Certified Providers designated by the Object Management Group, an industry standards consortium that governs the FIGI system. *See About: Facilitators,* OpenFIGI, *available at https://www.openfigi.com/about/facilitators see also* Object Mgmt. Grp., *Financial Instrument Global Identifier (FIGI) v1.0* § B.3 (Nov. 2015), *available at https://www.omg.org/spec/FIGI/1.0/PDF.* Bloomberg L.P. is also the sole Registration Authority designated by the Object Management Group to keep the comprehensive inventory of all registered FIGIs. *See About: Symbology, OpenFIGI, available at https://www.openfigi.com/about/symbology.* Because FIGI is an open standard, its use (*e.g.,* its access, storage, assignment, distribution) does not entail fees or license restrictions. *See id.*

[133] *See About: Facilitators,* OpenFIGI, *available at https://www.openfigi.com/about/facilitators.*

[134] Under the final rule, the format requirement for electronic filings on EDGAR will be dictated by the EDGAR Filer Manual, which allows for HTML or ASCII submissions. *See* 2021 EDGAR Filer Manual, *supra* footnote, at Sections 2.1 and 5.2. This flexibility should allow filers to choose the format that best suits their needs and minimizes their costs of complying with the rule. The benefits and costs discussed in this section III with respect to electronic filings instead of the current paper submissions are those that we would expect to be realized from HTML or ASCII formatted submissions on EDGAR. Both formats are widely used, and neither requires significant special expertise for their preparation, submission, or

surrounding paper submissions is manual in nature, requiring processing by various staff as a filing is received and subsequently routed to the appropriate staff members within the Commission for review. In addition, electronic filings will minimize the risks of delay in staff receiving the information via paper submissions and increase efficiency in the staff review process by reducing staff processing time, increasing quality assurance. Electronic filings are also easier than paper filings for the Commission to maintain in accordance with the Commission's record retention requirements because they are easier to store, easier to access, easier to search, and easier to track.[135] Finally, electronic filings will allow filers to more effectively and efficiently navigate future disruptive events—like COVID–19—when staff and filers are unable to access their physical work facilities to complete, submit and process paper fillings.

Electronic submissions will directly benefit filers of applications for orders under the Advisers Act, Form ADV–NR, and 13(f) Confidential Treatment Requests by reducing printing and delivery costs. To the extent such savings are passed along to investors, investors will benefit indirectly as well. Overall, we expect that such cost reductions and any resulting savings to investors will be minimal.[136]

With respect to applications for orders under the Advisers Act specifically, because electronic submissions will be more quickly available on the Commission's EDGAR system, the public may be able to find and review a filing more quickly by accessing the EDGAR system through the Commission's website or through third-party websites that link to EDGAR. To the extent that applications for orders inform investors' decisions with respect to the selection or retention of investment advisers, investors may be able to make such decisions more expeditiously. In addition, because applicants for orders under the Advisers Act are expected, to the extent possible, to adhere to applicable precedent, applicants and staff rely on recently evaluated applications.[137] The final amendments will benefit future applicants and the Commission by making such applications more quickly available.

We expect that the final amendments regarding applications for orders under the Advisers Act and the Investment Company Act will have several economic benefits specific to both categories of these amendments. First, designating the Secretary of the Commission as the addressee for applications in paper for an order under either act will minimize the risks of delay in staff receiving the application via paper submissions and increase efficiency in the staff review process by reducing staff processing time. Second, applications under both the Investment Company Act and the Advisers Act will be in the same system, so users will need to learn how to access only one system to obtain relevant information related to an exemptive application.

Additionally, the final amendments include certain features designed to permit applicants to streamline the application process. The Commission has periodically received applications from parties seeking relief under both the Advisers Act and the Investment Company Act who were unable to file a single application because of the current multiple-system requirements for the differing applications.[138] Thus, the final amendments could result in benefits for applicants who are simultaneously applying for orders under both the Advisers Act and the Investment Company Act by allowing them to use a single electronic format and file jointly in a single submission. We expect such savings to be small because, while we do not have precise data on the number of jointly filed applications, staff experience indicates that they are rare relative to independent or non-joint applications. The final amendments also make changes to harmonize requirements for submission of applications for orders under the Advisers Act and Investment Company Act, including the elimination of requirements that applications be notarized and that they include proposed notices as exhibits, which will result in direct cost savings for the applicants. As detailed in section IV, we estimate that the reduction in cost represents approximately one percent of the cost of preparing an application.[139]

We expect that the final amendments to rule 13f–1 and Form 13F will have several economic benefits specific to those amendments. First, to the extent that electronic submission of 13(f) Confidential Treatment Requests speeds up the initial process of getting the request to the appropriate Commission staff members, in those instances where a request for confidential treatment is denied, and assuming that there is no petition for review, the corrected holdings information should be publicly available more quickly than if the 13(f) Confidential Treatment Request had been made in paper. This reduction in the length of the *de facto* confidential treatment period of information on Form 13F can benefit users of Form 13F data and enhance investor decision making to the extent that market observers and participants use such data to inform their activities.

Second, the final amendments that require each Form 13F and Form 13F–NT filer to provide additional identifying information will allow the Commission and other consumers of Form 13F data to identify a Form 13F filer's other regulatory filings and the interrelationships between managers who share investment discretion over 13(f) Securities more easily. This can identify additional sources of market information for the public that increase their understanding of markets and enhance their ability to make informed investment decisions.[140]

Third, the final technical amendments to Form 13F that eliminate the requirement that dollar values be rounded to the nearest thousand and that the corresponding ''000'' be omitted and remove the character limits on the cover and summary pages of the Form should benefit the Commission and users of Form 13F data by reducing filer mistakes and data inaccuracies.[141] Two commenters agreed that the technical amendments will benefit filers by reducing data errors.[142]

Finally, the amendments that permit managers to report a security's FIGI on Form 13F in addition to its CUSIP number should, in those cases where 13F filers choose to include FIGI, benefit users of 13F data by providing an additional security identification method to supplement the CUSIP number (as well as the title and issuer name of the security).[143] Form 13F data

ingestion. Furthermore, these benefits and costs substantially arise to the same extent regardless of whether the filer chooses the ASCII or HTML format.

[135] *See supra* footnote 12 for a discussion of our experience with similar transitions to electronic filings.

[136] *See infra* footnotes 142 and 143.

[137] *See supra* footnote 17.

[138] For such applications, the applications under the Investment Company Act were made in HTML on EDGAR, and the Advisers Act applications were submitted in paper.

[139] *See infra* footnote 164.

[140] *See supra* footnotes 85 and 86.

[141] *See supra* footnote 112.

[142] *See* ICI Comment Letter; WhaleWisdom Comment Letter.

[143] Users of Form 13F data include corporate issuers, investors and investment managers (including those subject to Form 13F filing requirements), financial analysts, market researchers, Commission staff and others. A more detailed discussion of the present uses and users of Form 13F data is contained in the Commission's 2020 proposing release regarding the modification

Continued

users could benefit from certain features of FIGIs, including the ability to use FIGIs without fees or restrictions.[144]

2. Costs

Requiring electronic submission of applications for orders under the Advisers Act can result in costs to applicants, including those associated with filing a Form ID for the first time to obtain the access codes needed to submit an application on the Commission's EDGAR system. As discussed in Section IV below, we expect these costs to be minimal.[145]

Similarly, non-resident general partners and non-resident managing agents of investment advisers, who currently file Form ADV–NR as a paper filing submission, may incur costs associated with switching to filing this form electronically via the IARD system. However, given that these filers are associated with investment advisers that already file Form-ADV through the IARD system, we expect that these costs will be minimal.[146]

The final amendments can result in additional costs associated with electronically filing 13(f) Confidential Treatment Requests. However, unlike the case of applications for orders under the Advisers Act where an applicant may have no prior experience with EDGAR and therefore may bear some initial cost, managers, by virtue of the fact that they are already filing Form 13F, are experienced in using the EDGAR system. The final amendments will merely change the manner in which a 13(f) Confidential Treatment Request is submitted, should a filer choose to make such a request. While filers are likely to incur some costs associated with the transition to an electronic process for the submission of 13(f) Confidential Treatment Requests, we believe these costs will be offset by the reduction in printing and delivery costs currently associated with paper submissions.[147]

The final amendments to Form 13F will also impose costs on managers because they will have to modify their electronic filing processes to, among other things, round dollar values on Form 13F to the nearest dollar, to discontinue omitting the ''000'' for such values, and to remove the character limits on the cover page, the summary page, and the information table.[148] One commenter stated that these amendments may entail operational challenges and would be costly as a result, especially for smaller advisers.[149] While the commenter did not detail the kinds of operational challenges the amendments may create, we anticipate that filers will incur costs to update existing systems to implement these changes. However, we continue to believe that the costs associated with these amendments will be limited for most filers as these changes involve changing only the formatting of information that is already being produced.

In addition, managers may incur some costs to provide additional identifying information. One commenter stated that this could be burdensome for managers that have numerous related parties or sub-advisers, as they will need to adapt their operations to obtain CRD numbers and SEC file numbers from the other managers identified in their 13F reports and keep track of the new sets of numbers.[150] We believe that even for managers with numerous related parties or sub-advisers, these costs will be limited, as CRD numbers and SEC file numbers are simple pieces of information that we anticipate filers could transmit and store easily using existing systems. One commenter supported this belief, stating that the requirement of additional identifying information would not be unduly burdensome for 13F filers.[151]

The Commission does not expect that permitting managers to identify securities on Form 13F with FIGIs in addition to CUSIP numbers will impose any costs on managers relative to the baseline. Under the final amendments, managers will continue to report CUSIP numbers for each security they report on Form 13F. Managers that choose to report FIGIs in addition to CUSIP numbers on Form 13F would only be doing so at their option. Similarly, the Commission does not expect users of Form 13F data to incur any costs from the acceptance of FIGIs as an optional addition to CUSIP numbers on Form 13F.[152]

Estimates of direct compliance costs for the final amendments to Form 13F are further discussed in Section V.D.

3. Efficiency, Competition, and Capital Formation

Generally, because most of the final amendments simply streamline filing processes, we do not expect these amendments to have a significant effect on efficiency, competition, or capital formation. Nonetheless, in this section, we discuss the effects of the final amendments on efficiency, competition, and capital formation.

As discussed above, the final amendments regarding applications for orders under the Advisers Act can increase the speed at which the public has access to these applications. To the extent that applications for orders inform investors' decisions with respect to the selection or retention of investment advisers, more timely access to this information can result in more efficient decisions by investors with respect to how they select their investment advisers.

Similarly, as discussed above, the final technical amendments to Form 13F requiring that dollar values be rounded to the nearest dollar, that the ''000'' no longer be omitted, and the removal of character limits should increase the accuracy and utility of the information filed on Form 13F. In addition, the requirement that filers include additional identifying information when filing Form 13F, as well as the option for filers to provide FIGIs in addition to CUSIP numbers on Form 13F, should increase the usefulness of the information filed on Form 13F. To the extent the more accurate and useful data available to the public informs investment decisions, the information efficiency of the market may be enhanced.

D. Reasonable Alternatives

In formulating the final amendments, we considered several alternatives to the final amendments that retain the central requirement that filings that are currently filed on paper be filed electronically, but they differ with

of Form 13F reporting thresholds. *See* 2020 Form 13F Proposal, *supra* footnote 52, at 46023.

[144] *See supra* footnote 98. As another example, because each security has a single FIGI for its entire lifetime, regardless of any corporate action such as a reverse stock split, the tracking of securities over time may be easier with FIGIs than with CUSIP numbers. *See Allocation Rules for the Financial Instrument Global Identifier Standard* Version 29.7 (Mar. 2022), *available at https://www.openfigi.com/assets/local/figi-allocation-rules.pdf* (''A FIGI is never reused and remains with the instrument in perpetuity. A FIGI does not change as a result of any corporate action.''); *see also* CUSIP Global Servs., *CUSIP Permanence FAQ* (July 2021), *available at https://www.cusip.com/index.html* (follow link for ''frequently asked questions about CUSIP Permanence'') (noting that ''. . . a new CUSIP will continue to be assigned for reverse stock splits and forward stock splits with a mandatory exchange of shares.'').

[145] *See infra* footnote 156.

[146] *See infra* section V.B.1, noting that we estimate that there will be no change to our current internal burden estimate that Form ADV–NR requires an average of one hour to complete.

[147] *See infra* footnote 181.

[148] *See supra* footnote 111.

[149] *See* IAA Comment Letter.

[150] *See* IAA Comment Letter, *supra* footnote 90, and accompanying text.

[151] *See* WhaleWisdom Comment Letter, *supra* footnote 89.

[152] A more detailed discussion of the present uses and users of Form 13F data is contained in the Commission's 2020 proposing release regarding the modification of Form 13F reporting thresholds. *See* 2020 Form 13F Proposal, *supra* footnote 52, at 46023.

respect to how the filings would be made. This section discusses these alternatives.

1. Alternative Filing System for Advisers Act Orders

The final amendments will require investment advisers to file applications for orders under the Advisers Act on the Commission's EDGAR system. Alternatively, the Commission could require investment advisers to file applications through some other system. For example, as noted in section II.A.2 above, advisers who register with the Commission do so through the IARD system rather than EDGAR. Thus, filing through the IARD system would offer the potential benefit of greater applicant familiarity with the filing system.

While we acknowledge that some applicants may be more familiar with the IARD system than EDGAR, we are adopting the final amendments making mandatory electronic submissions of Advisers Act applications on EDGAR for several reasons.[153] First, we believe the cost to advisers will be relatively low because the final amendments will assess no filing fees associated with these submissions through EDGAR. Many advisers also likely have experience submitting electronic filings via EDGAR because their managers may already be required to submit Form 13F via EDGAR, reducing the costs associated with setting up systems and processes to comply with the amendments. Second, filing in EDGAR will allow for applications under the Investment Company Act and the Advisers Act to be filed jointly, reducing filing cost.

2. Alternative Filing System for 13(f) Confidential Treatment Requests

The final amendments will require managers to file 13(f) Confidential Treatment Requests on the Commission's EDGAR system. Alternatively, the Commission could require that confidential treatment requests be submitted electronically via a secure file transfer service. Some managers were able to use such a service to submit their confidential treatment requests to mitigate delays in receiving paper filings during the events of COVID–19.[154]

Requiring submission via a secure file transfer service would have the benefit that some managers may already be familiar with the process of submitting filings using such a system based on their experience over the last year. However, in light of the fact that all managers are already familiar with the process of making filings on EDGAR, we believe it would be less burdensome for managers to make 13(f) Confidential Treatment Request filings on EDGAR as well.[155] Additionally, because 13(f) Confidential Treatment Requests will be viewable on the same system as a manager's public Form 13F filing, the Commission will be able to review all of a manager's holdings efficiently.

3. Single Form 13F Filing With Electronic Attachment

Rather than requiring managers to file 13(f) Confidential Treatment Requests electronically via EDGAR, we considered modifying existing Form 13F in such a way that filers would list all reportable 13(f) Securities on the form but indicate for which securities, if any, they were seeking confidential treatment. Filers would indicate that they were seeking confidential treatment for particular securities by checking a box associated with a security and also indicating the length of time for which they were seeking confidential treatment. Securities for which the filer checked the box would not be visible to public users of the EDGAR system. Filers requesting confidential treatment would still be required to attach a confidential electronic document in which they would indicate the type of confidential request and provide factual support to enable the Commission to make an informed judgment as to the merits of the request.

This alternative of a single Form 13F filing offers the benefit of slightly reducing the burden on the filer from filing multiple lists of securities to filing a single list and potentially decreasing the time between when a 13(f) Confidential Treatment Request is denied or expires and the time when an amended Form 13F is filed publicly. However, we believe that this approach would significantly increase the risk of confidential information inadvertently being made public, including by filers who complete the single form incorrectly.[156]

4. Alternative Security Identifier Requirement

Rather than requiring managers to identify securities on Form 13F with CUSIP numbers while permitting managers to provide the FIGIs for those securities as well, we considered permitting managers to identify securities on Form 13F with either CUSIP numbers or FIGIs. However, we believe that this alternative could create a burden for some users of 13(f) data. Because 13(f) Securities could be reported using their CUSIP numbers or their FIGIs under this alternative, any Form 13(f) data users who wished to use the same security identification code (*i.e.,* CUSIP number or FIGI) for all 13(f) Securities would be required to convert any reported CUSIP numbers to FIGIs, or vice versa. Finding the FIGI associated with a security's CUSIP number can be done for free, but given the length of many Form 13F filings, some data users would seek to perform such conversion in bulk on a programmatic basis rather than manually. Such bulk conversion could be done programmatically using a free API on the OpenFIGI web page, but data users that had not already integrated FIGIs into their systems would incur an initial time burden of preparing the database and creating the query to leverage the free mapping API. In addition, with respect to any data users that chose to continue storing CUSIP numbers in their systems rather than integrate FIGIs, those data users would be subject to license-based fees and restrictions associated with converting FIGIs (or other security identifiers such as ticker symbols) to CUSIPs in bulk. Therefore, we elected to adopt an approach that, allows managers to provide FIGIs for some or all of their 13(f) Securities, while continuing to require managers to provide CUSIP numbers for all of their 13(f) Securities, to avoid this potential burden on some 13(f) data users.

V. Paperwork Reduction Act

The rule and form amendments contain ''collections of information'' within the meaning of the Paperwork Reduction Act of 1995 (''PRA'').[157] We are submitting the proposed collections of information to the Office of Management and Budget (''OMB'') for review in accordance with the PRA.[158] The titles for the collections of information we are amending are:

[153] *See* ICI Comment Letter, *supra* footnote 21.

[154] *See supra* footnote 126 and accompanying text.

[155] *See supra* footnote 72 and accompanying text.

[156] One commenter agreed, stating that 13(f) Confidential Treatment Requests, including the justifications and related holdings information, should not be included on or attached to Form 13F, but should be filed as a separate file, which would provide the best protection against inadvertent publication by either the Commission or the filer. *See* PIC Comment Letter.

[157] 44 U.S.C. 3501 through 3521.

[158] 44 U.S.C. 3507(d) and 5 CFR 1320.11.

(i) ''Rule 0–4 under the Investment Advisers Act of 1940, General Requirements of Papers and Applications'' (OMB Control No. 3235–0633); (ii) ''Form 13F, Report of Institutional Investment Managers (pursuant to sec. 13(f) of the Securities Exchange of 1934)'' (OMB Control No. 3235–0006); and, (iii) ''Rule 0–2 and Form ADV–NR under the Investment Advisers Act of 1940'' (OMB Control No. 3235–0240). We are not amending the collections of information entitled (i) ''Form ID'' (OMB Control No. 3235–0328),[159] or (ii) ''Form ADV'' (OMB Control No. 3235–0049). An agency may not conduct or sponsor, and a person is not required to respond to, a collection of information unless it displays a currently valid OMB control number. We did not receive any comments on the PRA analysis. We updated some estimates from the proposal to reflect more recent data.[160]

A. Amendments to Rule 0–4

Rule 0–4 under the Advisers Act prescribes general instructions for filing papers and applications under the Advisers Act with the Commission. We are adopting amendments to rule 0–4.[161] Final rule 0–4 will require that every application for an order under any provision of the Advisers Act, for which a form with instructions is not specifically prescribed, and every amendment to such application be electronically filed pursuant to Regulation S–T. Final rule 0–4 will eliminate the requirements to have verifications of applications and statements of fact made in connection with applications notarized and will eliminate the requirement that applications include proposed notices as exhibits to applications. In addition, final rule 0–4 will specify that paper submissions must be addressed to the Secretary of the Commission, remove the reference to microfilming, and clarify the wording related to duplicate original copies of paper applications.

Respondents to the collection of information are applying for orders of the Commission under the Advisers Act. The requirements of rule 0–4 are designed to provide Commission staff with the necessary information to assess whether granting the orders are necessary and appropriate, in the public interest and consistent with the protection of investors and the intended purposes of the Advisers Act. This collection of information is necessary in order to obtain or retain benefits. Responses will not be kept confidential.

Applicants for orders under the Advisers Act file applications as they deem necessary. Applicants can include registered investment advisers, affiliated persons of registered investment advisers, and entities seeking to avoid investment adviser status, among others. The Commission estimates that it receives seven initial applications per year submitted under rule 0–4 of the Advisers Act. Although some applications are submitted on behalf of multiple applicants, these applicants in the vast majority of cases are related entities and are treated as a single respondent for purposes of this analysis.

1. Burden Estimate for Rule 0–4

We estimate the same burdens for rule 0–4 as proposed.[162] Most of the work of preparing an application is performed by outside counsel and, therefore, imposes no time burden on the respondents.[163] Nevertheless, the Commission continues to estimate one annual internal burden hour for administrative purposes. We do not believe that the amendments will change the burden on applicants. Likewise, we do not believe that the amendments will change the number of such applications that are filed annually. Therefore, because there will continue to be no time burden on the respondents, we believe that the one annual internal burden hour for administrative purposes remains appropriate.

Although we expect the amendments will decrease the external cost burden for respondents as a practical matter, our estimated external cost burden will increase due to using updated data for baseline costs.[164] The amendments will eliminate the requirement to notarize applications. The notary service is typically provided by a secretary or similar administrative employee of the applicant or the outside counsel preparing the application. It represents an hour to the applicant, so elimination of the notarization requirement would reduce the external cost burden only by a negligible amount. The amendments will require that paper submissions under rule 0–4 be addressed to the Secretary of the Commission, remove the reference to microfilming, and clarify the wording related to duplicate original copies of paper applications. In the proposal, we discussed that these amendments would decrease the applicants' burdens, but upon further analysis, we do not believe that adding the Secretary of the Commission to the address, removing a reference to microfilming, and clarifying wording concerning duplicate original copies of paper applications will change any external cost burdens for applicants.[165] The amendments will eliminate the requirement that applicants include proposed notices as exhibits to applications, which will reduce external costs for applicants. A proposed notice is a summary of the statements in the application. Based on staff experience, we believe that preparation of the proposed notice by outside counsel represents approximately one percent of the external cost of preparing an application.[166] We estimate that the total reduction in the external costs will be approximately $4,091.[167] However, as discussed in the table below, we estimate that the baseline external costs will increase; therefore, although the amendments will decrease external costs, our estimated external cost burden will increase, taking into account the increased baseline. The tables below detail and summarize the annual burden estimates for final rule 0–4.

[159] The Commission estimates that each year only one applicant for an order under any provision of the Advisers Act will need to file a Form ID with the Commission in order to gain access to EDGAR. Form ID is used to request the assignment of access codes to file on EDGAR. Any applicant that has made at least one filing with the Commission via EDGAR since 2002 has been entered into the EDGAR system by the Commission and will not need to file Form ID in order to file electronically on EDGAR. However, applicants that have never made a filing with the Commission via EDGAR will need to file Form ID. We estimate that only one applicant for an order under any provision of the Advisers Act will need to file a Form ID with the Commission each year in order to gain access to EDGAR. Thus, we believe that the proposed amendments will not impose substantive new burdens on the overall population of respondents or affect the current overall cost estimates for Form ID. Therefore, we believe that the current burden and cost estimates for Form ID remain appropriate. Accordingly, we are not revising the current burden or cost estimates for Form ID.

[160] *See* Proposing Release, *supra* footnote 2.

[161] *Id.*

[162] *See* Proposing Release, *supra* footnote 2.

[163] For the previously approved estimates, *see* ICR Reference No. 201908–3235–002 (conclusion date Mar. 25, 2020), *available at https://www.reginfo.gov/public/do/PRAViewICR?ref_nbr=201908-3235-002.*

[164] The previously approved annual external cost burden is $392,500.

[165] *See* Proposing Release, *supra* footnote 2.

[166] *See* 2008 IC Applications Release, *supra* footnote 12.

[167] The total external cost burden reduction of one percent would amount to $4,091 given the estimated distribution of all applications: ($141 × 3) + ($483 × 3) + ($2,219 × 1) = $4,091. *See* Table 3.

TABLE 3—ANNUAL EXTERNAL COST BURDEN ESTIMATES

	Types of applications	Current external cost burden per filing [1]	Estimated reduction in external cost [2]	Estimated external cost burden per filing	Number of applications [3]		Estimated external cost burden per filing type
Advisers Act Exemptive Applications.	Well Precedented Applications.	[4] $14,182	$(141)	$14,041	×	3	$42,123
	Medium Complexity Applications.	48,282	(483)	47,799	×	3	143,397
	High Complexity Applications.	221,909	(2,219)	219,690	×	1	219,690
Annual external cost burden.	.....	.....	.....	.....	.....	.....	405,210

Notes:

[1] Based on conversations with applicants and attorneys, the cost for applications ranges from approximately $14,182 for preparing a well-precedented, routine (or otherwise less involved) application, $48,282 for preparing medium complex applications and approximately $221,909 to prepare a complex or novel application.

[2] We estimate that preparing a proposed notice by outside counsel represents approximately one percent of the cost of preparing an application.

[3] Based on our experience, we estimate that the Commission annually receives three well-precedented applications, three applications of medium complexity, and one high complexity application.

[4] The cost that outside counsel charges applicants depends on the complexity of the issues covered by the application and the time required. Based on conversations with applicants and attorneys, the cost for applications ranges from approximately $14,182 for preparing a well-precedented, routine (or otherwise less involved) application to approximately $221,909 to prepare a complex or novel application. $48,282 is the median between $14,182 and $221,909. We have adjusted these numbers to reflect changes in prices from the previously approved estimates based on the U.S. Bureau of Labor Statistic's CPI Inflation calculator. We estimate that the Commission receives one highly complex, time-consuming application annually, three applications of medium complexity, and three of the least complex applications subject to rule 0–4. There are no ongoing expenses.

TABLE 4—SUMMARY OF THE ANNUAL NUMBER OF RESPONSES, TIME BURDEN, AND EXTERNAL COST BURDEN

Description	Requested	Previously approved	Change
Responses	7	7	0
Time burden (Hours)	1	1	0
External Cost Burden (Dollars)	$405,210	$392,500	$12,710

B. Amendment to Form ADV–NR

Rule 0–2 under the Advisers Act establishes procedures by which a person may serve process, pleadings, or other papers on a non-resident investment adviser, or on a non-resident general partner or non-resident managing agent of an investment adviser. Under rule 0–2, persons who wish to serve the above-referenced parties may do so by furnishing the Commission with one copy of the papers that are to be served along with one copy for each named party. The Secretary will promptly forward a copy to each named party by registered or certified mail. If the Secretary certifies that the rule was followed, the certification constitutes evidence of service of process under rule 0–2. Non-resident general partners and non-resident managing agents of both SEC-registered investment advisers and exempt reporting advisers must file Form ADV–NR to designate the Secretary as the non-resident general partner's or non-resident managing agent's agent for service of process.[168] They must submit Form ADV–NR in connection with the adviser's initial Form ADV submission or within 30 days of becoming a non-resident.[169]

We are adopting amendments to Form ADV–NR as proposed.[170] The amendments will require an investment adviser's non-resident general partners and non-resident managing agents to file Form ADV–NR electronically through IARD. Form ADV–NR filers will be able to meet this filing requirement without needing any specialized software or hardware. No fee will be assessed for filing Form ADV–NR through IARD. The final rule will require non-resident general partners and non-resident managing agents to amend their Form ADV–NR within 30 days whenever any information contained in the form becomes inaccurate by filing with the Commission a new Form ADV–NR.

The respondents to this information collection are each non-resident general partner or non-resident managing agent of both SEC-registered investment advisers and exempt reporting advisers. The collection of information is mandatory. Responses are not kept confidential. The collection of information is necessary to provide appropriate consent to permit the Commission and other parties to bring actions against non-resident partners and managing agents for violations of the Federal securities laws and to enable the commencement of legal and/or regulatory actions against investment advisers that are doing business in the United States, but are not residents.

1. Burden Estimate for Form ADV–NR

We are updating the burden estimates from the proposal to reflect more recent data.[171] We continue to estimate that final Form ADV–NR will require an average of one hour to complete, which is the same as the previously approved estimate and the proposal.[172]

[168] Non-resident investment advisers comply with rule 0–2 by executing 17 CFR 279.1 (Form ADV).

This burden estimate is incorporated into a separate burden estimate for Form ADV.

[169] 17 CFR 279.4, 17 CFR 297.1.

[170] *See* Proposing Release, *supra* footnote 2.

[171] *See* Proposing Release, *supra* footnote 2.

[172] For the previously approved estimates, see ICR Reference No. 202004–3235–022 (conclusion date Sept. 28, 2020), *available at* https://www.reginfo.gov/public/do/PRAViewICR?ref_nbr=202004-3235-022.

We are using more recent data to estimate the number of responses as compared to the previously approved estimates and the proposal.[173] Taking into account more recent data from 2019 to 2021, the Commission received an average of 21 Form ADV–NR filings per year, which represents a decrease of 32 responses from the previously approved 53 responses.[174] Accordingly, as each response takes an average of one hour to complete, we estimate that the aggregate annual time burden for Form ADV–NR will be 21 hours, which represents a decrease of 32 hours from the previously approved burden of 53 hours.[175]

In proposing amendments to Form ADV–NR in 2021, the Commission estimated the monetized cost burden using wage estimates for 2021.[176] We are updating the estimated monetized cost burden to reflect more recent wage estimates for 2022.[177] Form ADV–NR filers will likely use a combination of compliance clerks and general clerks to complete Form ADV–NR and file it with the Commission through IARD. The Commission staff estimates the hourly wage for compliance clerks to be $77 per hour, and the hourly wage for general clerks to be $68 per hour. For each burden hour, compliance clerks will perform an estimated 0.75 hours, and general clerks also will perform an estimated 0.25 hours. Therefore, we estimate the monetized time burden per response to be $75,[178] for an aggregate monetized time burden of $1,575.[179] This represents a decrease of $2,082 from the previously approved monetized time burden of $3,657.

We continue to estimate that there will be no external cost burden, as previously approved and as proposed. The amendments will require an investment adviser's non-resident general partners and non-resident managing agents to file Form ADV–NR electronically through IARD. Form ADV–NR filers will be able to meet this filing requirement without needing any specialized software or hardware. No fee will be assessed for filing Form ADV–NR through IARD.

TABLE 5—SUMMARY OF THE AGGREGATE ANNUAL NUMBER OF RESPONSES, TIME BURDEN, MONETIZED TIME BURDEN, AND EXTERNAL COST BURDEN

Description	Requested	Previously approved	Change
Number of Responses	21	53	(32)
Time Burden (hours)	21	53	(32)
Monetized Time Burden (Dollars)	$1,575	$3,657	$(2,082)
External Cost Burden (Dollars)	$0	$0	$0

C. Form ADV and Rule 203–1

Form ADV is the investment adviser registration form and exempt reporting adviser reporting form filed electronically with the Commission pursuant to rules 203–1 (17 CFR 275.203–1), 204–1 (17 CFR 275.204–1) and 204–4 (17 CFR 275.204–4) under the Advisers Act by advisers registered with the Commission or applying for registration with the Commission or by exempt reporting advisers filing reports with the Commission. Rule 203–1 under the Advisers Act requires every person applying for investment adviser registration with the Commission to file Form ADV.[180] The paperwork burdens associated with rules 203–1, 204–1, and 204–4 are included in the approved annual burden associated with Form ADV and therefore do not entail separate collections of information. These collections of information are found at 17 CFR 275.203–1, 275.204–1, 275.204–4, and 279.1 (Form ADV itself) and are mandatory. Responses are not kept confidential.

As proposed, we are adopting amendments to the instructions to Form ADV and rule 203–1 to require an investment adviser's non-resident general partner and non-resident managing agents to file Form ADV–NR electronically through IARD. As discussed above, the collection of information is necessary for us to obtain appropriate consent to permit the Commission and other parties to bring actions against non-resident partners and agents for violations of the Federal securities laws and to enable the commencement of legal and/or regulatory actions against investment advisers that are doing business in the United States, but are not residents.[181]

We do not believe that the amendments to Form ADV or rule 203–1 will change the burden on investment advisers' application for registration with the Commission. Likewise, we do not believe that our proposed amendments will change the number of such registrations that are filed annually. Therefore, we believe that the currently approved burden and cost estimates for Form ADV remain appropriate. Accordingly, we are not

[173] *See* Proposing Release, *supra* footnote 2 (using data from 2018 through 2020).

[174] (53 filings in 2019 + 5 filings in 2020 + 4 filings in 2021 = 62 filings)/3 years = an average of 20.66 filings a year, rounded to 21 filings a year.

[175] (21 annual responses × 1 hour per response = an aggregate annual time burden of 21 hours.)

[176] *See* Proposing Release, *supra* footnote 2.

[177] The Commission's estimates of the relevant wage rates are based on salary information for the securities industry compiled by the Securities Industry and Financial Markets Association's Office Salaries in the Securities Industry 2013. The estimated figures are modified by firm size, employee benefits, overhead, and adjusted to account for the effects of inflation. *See* Securities Industry and Financial Markets Association, Report on Management & Professional Earnings in the Securities Industry 2013.

[178] (0.75 hours per compliance clerk × $77 an hour) + (0.25 hours per general clerk × $68 an hour) = $74.75, rounded to $75.

[179] $75 per adviser × 21 advisers = $1,575.

[180] Rule 204–4 under the Advisers Act requires certain investment advisers exempt from registration with the Commission (''exempt reporting advisers'') to file reports with the Commission by completing a limited number of items on Form ADV. Rule 204–1 under the Advisers Act requires each registered and exempt reporting adviser to file amendments to Form ADV at least annually, and requires advisers to submit electronic filings through IARD.

[181] *See supra* section V.B.

revising the current burden or cost estimates for Form ADV.

D. Amendments to Form 13F

In our most recent PRA submission for Form 13F, we estimated a total hour burden of 67,242 hours, with an internal cost burden of $13,733,909, and an external cost burden of $4,846,374.[182] The table below summarizes the initial and ongoing annual burden estimates associated with amendments to Form 13F related to the requirements for managers to provide additional identifying information and the technical amendments to Form 13F discussed above.[183] We continue to believe that our amendments to Form 13F will not pose additional external cost burdens. We also continue to believe that our amendments to the process for filing 13(f) Confidential Treatment Requests will not change the burden of filing Form 13F Reports with the Commission.[184]

BILLING CODE 8011–01–P

[182] This estimate is based on the last time the rule's information collection was submitted for PRA renewal in 2022. This renewal included revisions to the baseline of the PRA burdens associated with Form 13F that were discussed in the Proposing Release. *See* Proposing Release *supra* footnote 2, at nn.184–187 and accompanying text. We received no comments on these revisions.

[183] *See supra* section II.C.2. In a change from the proposal, the final rules include an amendment to Form 13F that will allow managers to disclose, for any security reported on Form 13F, the security's FIGI in addition to its CUSIP number. Because this amendment will be optional, managers are unlikely to choose to disclose a FIGI if it will significantly increase the burdens associated with filing Form 13F. However, for PRA purposes, we assume that this optional requirement will initially impose 0.5 hours of burdens for a senior programmer and compliance clerk to make this optional disclosure on Form 13F. We do not believe that this optional disclosure will impose any ongoing burdens, nor do we believe it will impose additional external costs associated with complying with Form 13F.

[184] *See* Proposing Release *supra* footnote 2, at n.187. We received no comments on this aspect of the Proposing Release.

Table 6: Form 13F PRA Estimates

	Initial hours	Annual hours		Wage rate[1]	Internal time cost	External costs[2]
PROPOSED ESTIMATES						
Estimated Form 13F-HR Burdens						
Proposed Amendments to Form 13F-HR per filer (additional identifying information and technical amendments)	9 hours	3.5 hours	x	$202.50 (blended rate for senior programmer and compliance clerk)	$708.75	$0
	2 hours	0.67 hours	x	$368 (compliance attorney rate)	$246.56	
Total burden of proposed amendments to Form 13F-HR per filer		4.17			$955.31	
New annual estimated Form 13F-HR burden per filer		15.17 hours			$3,348.31	$789
Number of annual filers		x 5,466 filers			× 5,466 filers	×5,466 filers
Total new annual burden		82,919.2 hours			$18,301,862.5	$4,312,674
Estimated Form 13F-NT Burdens						
Proposed Amendments to Form 13F-NT (additional identifying information)	5 hours	2.17 hours	x	$202.50 (blended rate for senior programmer and compliance clerk)	$439.43	$0
	1 hour	0.33 hours		$368 (compliance attorney rate)	$121.44	
Total burden of proposed amendments to Form 13F-NT		2.5 hours			$560.87	
New annual estimated Form 13F-NT burden per filer		6.5 hours			$844.87	$300
Number of annual filers		1,535 filers			1,535 filers	1,535 filers
Total new annual burden		9,977.5 hours			$1,296,875.45	$460,500
FINAL ESTIMATES						
Estimated Form 13F-HR Burdens						
Amendments to Form 13F-HR per filer (additional identifying information, optional use of FIGI, and technical amendments)	10 hours	4 hours[3]	x	$219.50 (blended rate for senior programmer and compliance clerk)	$878	$0
	2 hours	0.67 hours[3]	x	$400 (compliance attorney rate)	$268	
Total burden of amendments to Form 13F-HR per filer		4.67			$1,146	
Number of annual filers[4]		x 6,387 filers			x 6,387 filers	
Total new annual burden		29,827.29 hours			$7,319,502	
Estimated Form 13F-NT Burdens						
Amendments to Form 13F-NT (additional identifying information)	5 hours	2.17 hours[3]	x	$219.50 (blended rate for senior programmer and compliance clerk)	$476.32	$0
	1 hour	0.33 hours[3]		$400 (compliance attorney rate)	$132	

Total burden of amendments to Form 13F-NT		2.5 hours		$608.32	
Number of annual filers[5]		x 1,708 filers		x 1,708 filers	
Total new annual burden		4,270 hours		$1,039,010.56	
TOTAL ESTIMATED FORM 13F BURDEN					
Current burden estimates	67,242 hours			$13,733,909	$4,846,374
Revised burden estimates	101,339.29 hours			$22,092,421.60	$4,846,374

Notes:

1. These PRA estimates assume that the same types of professionals would be involved in satisfying the final amendments that we believe otherwise would be involved in preparing and filing reports on Forms 13F-HR and 13F-NT. The Commission's estimates of the relevant wage rates are based on salary information for the securities industry compiled by the Securities Industry and Financial Markets Association's Office Salaries in the Securities Industry 2013. The estimated figures are modified by firm size, employee benefits, overhead, and adjusted to account for the effects of inflation. *See* Securities Industry and Financial Markets Association, Report on Management & Professional Earnings in the Securities Industry 2013.
2. The external costs of complying with Form 13F can vary among filers. Some filers use third-party vendors for a range of services in connection with filing reports on Form 13F, while other filers use vendors for more limited purposes such as providing more user-friendly versions of the list of section 13(f) Securities. For purposes of the PRA, we estimate that each filer will spend an average of $300 on vendor services each year in connection with the filer's four quarterly reports on Form 13F-HR or Form 13F-NT, as applicable, in addition to the estimated vendor costs associated with any amendments. In addition, some filers engage outside legal services in connection with the preparation of requests for confidential treatment or analyses regarding possible requests, or in connection with the form's disclosure requirements. For purposes of the PRA, we estimate that each manager filing reports on Form 13F-HR will incur $489 for one hour of outside legal services each year.
3. Includes initial burden estimates annualized over a three-year period, plus 0.5 hours of ongoing annual burden hours for a senior programmer and compliance clerk. The estimates assume that a compliance attorney would only be involved in the initial implementation of the amendments.
4. This number is based on the number of Form 13F-HR filers as of Dec. 31, 2021.
5. This number is based on the number of Form 13F-NT filers as of Dec. 31, 2021.

BILLING CODE 8011–01–C

VI. Regulatory Flexibility Act Certification

The Commission certified, pursuant to Section 605(b) of the Regulatory Flexibility Act [185] (''RFA''), that, if adopted, the proposed amendments to rules 11, 100, 101, 102, and 201 of Regulation S–T [186] rule 0–4 under the Advisers Act [187] relating to the electronic filing of applications for orders under the Advisers Act and the Investment Company Act; rule 203–1,[188] Form ADV–NR and the instructions to Form ADV under the Advisers Act [189] relating to the electronic filing of Form ADV–NR; amendments to rule 0–2 under the Investment Company Act; [190] and amendments to rule 24b–2 under the Exchange Act, Form 13F and rules 101(a)(1)(xxii) and 101(d) of Regulation S–T relating to the requirement that managers electronically file requests for 13(f) Confidential Treatment Requests, along with other amendments to Form 13F,[191] would not have a significant economic impact on a substantial number of small entities. We included this certification in Section V of the Proposing Release. Although we requested written comments regarding this certification, no commenters responded to this request. We are adopting the final rules as proposed with one change to Form 13F that will allow managers to disclose, for any security reported on Form 13F, the security's FIGI. We do not believe that this change, which as discussed above will not impose any costs on managers, alters the basis upon which the certification in the Proposing Release was made. Accordingly, we certify that the final rules will not have a significant economic impact on a substantial number of small entities.

VII. Statutory Authority

The Commission is adopting amendments to rules and forms under the rulemaking authority set forth in sections 3, 12, 13(f), 14, 15(d), 23(a), 35A, and 36 of the Exchange Act [15 U.S.C. 78c, 78*l,* 78m(f), 78n, 78o(d), 78w(a), 78*ll,* and 78mm]; sections 8, 30, 31, and 38 of the Investment Company Act [15 U.S.C. 80a–8, 80a–29, 80a–30, and 80a–37]; and sections 203, 204, 206A, 210, and 211 of the Advisers Act [15 U.S.C. 80b–3, 80b–4, 80b–6a, 80b–10, and 80b–11].

List of Subjects

17 CFR Part 232

Reporting and recordkeeping requirements, Securities.

17 CFR Parts 240 and 249

Reporting and recordkeeping requirements, Securities.

17 CFR Part 270

Investment companies, Reporting and recordkeeping requirements, Securities.

17 CFR Part 275

Investment advisers, Reporting and recordkeeping requirements, Securities.

17 CFR Part 279

Investment advisers, Reporting and recordkeeping requirements, Securities.

Text of Rule and Form Amendments

In accordance with the foregoing, the Commission amends title 17, chapter II of the Code of Federal Regulations:

PART 232—REGULATION S–T—GENERAL RULES AND REGULATIONS FOR ELECTRONIC FILINGS

■ 1. The general authority citation for part 232 is revised to read as follows:

Authority: 15 U.S.C. 77c, 77f, 77g, 77h, 77j, 77s(a), 77z–3, 77sss(a), 78c(b), 78*l,* 78m, 78n, 78o(d), 78w(a), 78*ll,* 80a–6(c), 80a–8, 80a–29, 80a–30, 80a–37, 80b–4, 80b–6a, 80b–10, 80b–11, 7201 *et seq.;* and 18 U.S.C. 1350, unless otherwise noted.

* * * * *

[185] 5 U.S.C. 605(b).

[186] 17 CFR 232.11, 232.100, 232.101, 232.102, and 232.201.

[187] 17 CFR 275.0–4. For the purposes of the Advisers Act and the RFA, an investment adviser generally is a small entity if it: (i) has assets under management having a total value of less than $25 million; (ii) did not have total assets of $5 million or more on the last day of its most recent fiscal year; and (iii) does not control, is not controlled by, and is not under common control with another investment adviser that has assets under management of $25 million or more, or any person (other than a natural person) that had $5 million or more on the last day of its most recent fiscal year. 17 CFR 275.0–7(a).

[188] 17 CFR 274.203–1.

[189] 17 CFR 279.4; 17 CFR 279.1.

[190] 17 CFR 270.0–2. For purposes of the Investment Company Act and the RFA, an investment company is a small entity if it, together with other investment companies in the same group of related investment companies, has net assets of $50 million or less as of the end of its most recent fiscal year. 17 CFR 270.0–10(a).

[191] The definition of the term ''small entity'' in rule 0–10 under the Exchange Act does not explicitly reference investment advisers or other investment managers. However, rule 0–10 provides that the Commission may ''otherwise define'' small entities for purposes of a particular rulemaking proceeding. For purposes of the proposed amendments relating to managers electronically filing requests for 13(f) Confidential Treatment Requests and the other amendments to Form 13F, the Commission is defining small entity by using the definition of small entity under rule 0–7(a) under the Advisers Act as more appropriate to the functions of managers. *See supra* footnote 184.

■ 2. Amend § 232.11 by adding a definition for ''Investment Advisers Act'' in alphabetical order to read as follows:

§ 232.11 Definitions of terms used in this part.

* * * * *

Investment Advisers Act. The term *Investment Advisers Act* means the Investment Advisers Act of 1940.

* * * * *

§ 232.100 [Amended]

■ 3. Amend § 232.100 in paragraph (b) by removing the term ''Registrants'' and adding in its place ''Persons or entities''.

■ 4. Amend § 232.101 by:

■ a. Revising paragraph (a)(1)(iv);

■ b. Removing the period at the end of paragraph (a)(1)(xxi) and adding in its place a semicolon;

■ c. Adding paragraphs (a)(1)(xxii) and (xxiii); and

■ d. Revising paragraph (d).

The revisions and additions read as follows:

§ 232.101 Mandated electronic submissions and exceptions.

(a) * * *

(1) * * *

(iv) Documents filed with the Commission pursuant to sections 8, 17, 20, 23(c), 24(b), 24(e), 24(f), and 30 of the Investment Company Act (15 U.S.C. 80a–8, 80a–17, 80a–20, 80a–23(c), 80a–24(b), 80a–24(e), 80a–24(f), and 80a–29) and any application for an order under any section of the Investment Company Act (15 U.S.C. 80a–1 *et seq.*). The filing of an application for an order under any section of the Investment Company Act must be made on EDGAR as required by the EDGAR Filer Manual, as defined in § 232.11 (Rule 11 of Regulation S–T). Notwithstanding § 232.104 (Rule 104 of Regulation S–T), the documents filed or furnished under this paragraph will be considered as officially filed with or furnished to, as applicable, the Commission;

* * * * *

(xxii) Confidential treatment requests filed with the Commission pursuant to section 13(f) of the Exchange Act (15 U.S.C. 78m(f)) and the rules and regulations thereunder, including Form 13F (17 CFR 249.325). The filings must be made on EDGAR in the format required by the EDGAR Filer Manual, as defined in § 232.11 (Rule 11 of Regulation S–T). Notwithstanding § 232.104 (Rule 104 of Regulation S–T), the documents filed or furnished under this paragraph will be considered as officially filed with or furnished to, as applicable, the Commission; and

(xxiii) Any application for an order under any section of the Investment Advisers Act (15 U.S.C. 80b–1 *et seq.*). The filings must be made on EDGAR in the format required by the EDGAR Filer Manual, as defined in § 232.11 (Rule 11 of Regulation S–T). Notwithstanding § 232.104 (Rule 104 of Regulation S–T), the documents filed or furnished under this paragraph will be considered as officially filed with or furnished to, as applicable, the Commission.

* * * * *

(d) All documents, including any information with respect to which confidential treatment is requested, filed pursuant to section 13(n) (15 U.S.C. 78m(n)) and section 13(f) (15 U.S.C. 78m(f)) of the Exchange Act and the rules and regulations thereunder shall be filed in electronic format.

§ 232.102 [Amended]

■ 5. Amend § 232.102 in paragraph (a) introductory text by adding the phrase '', Rule 0–6 under the Advisers Act (§ 275.0–6 of this chapter)'' after ''Rule 0–4 under the Investment Company Act (§ 270.0–4 of this chapter),''

■ 6. Amend § 232.201 by revising paragraph (a) introductory text to read as follows:

§ 232.201 Temporary hardship exemption.

(a) If an electronic filer experiences unanticipated technical difficulties preventing the timely preparation and submission of an electronic filing, other than a Form 3 (§ 249.103 of this chapter), a Form 4 (§ 249.104 of this chapter), a Form 5 (§ 249.105 of this chapter), a Form ID (§§ 239.63, 249.446, 269.7 and 274.402 of this chapter), a Form TA–1 (§ 249.100 of this chapter), a Form TA–2 (§ 249.102 of this chapter), a Form TA–W (§ 249.101 of this chapter), a Form D (§ 239.500 of this chapter), an application for an order under any section of the Investment Company Act of 1940 (15 U.S.C. 80a–1 *et seq.*), an application for an order under any section of the Investment Advisers Act of 1940 (15 U.S.C. 80b–1 *et seq.*), an Interactive Data File (as defined in § 232.11), or an Asset Data File (as defined in § 232.11), the electronic filer may file the subject filing, under cover of Form TH (§§ 239.65, 249.447, 269.10 and 274.404 of this chapter), in paper format no later than one business day after the date on which the filing was to be made.

* * * * *

PART 240—GENERAL RULES AND REGULATIONS, SECURITIES EXCHANGE ACT OF 1934

■ 7. The general authority citation for part 240 continues to read as follows:

Authority: 15 U.S.C. 77c, 77d, 77g, 77j, 77s, 77z–2, 77z–3, 77eee, 77ggg, 77nnn, 77sss, 77ttt, 78c, 78c–3, 78c–5, 78d, 78e, 78f, 78g, 78i, 78j, 78j–1, 78k, 78k–1, 78*l,* 78m, 78n, 78n–1, 78o, 78o–4, 78o–10, 78p, 78q, 78q–1, 78s, 78u–5, 78w, 78x, 78*ll,* 78mm, 80a–20, 80a–23, 80a–29, 80a–37, 80b–3, 80b–4, 80b–11, 7201 *et seq.* and 8302; 7 U.S.C. 2(c)(2)(E); 12 U.S.C. 5221(e)(3); 18 U.S.C. 1350; Pub. L. 111–203, 939A, 124 Stat. 1376 (2010); and Pub. L. 112–106, sec. 503 and 602, 126 Stat. 326 (2012), unless otherwise noted.

* * * * *

■ 8. Amend § 240.24b–2 by:

■ a. Removing the preliminary note;

■ b. Adding introductory text;

■ c. Removing the phrase ''paragraphs (g) and (h)'' and adding in its place ''paragraphs (g) through (i)'' in paragraph (b) introductory text; and

■ d. Adding paragraph (i).

The additions read as follows:

§ 240.24b–2 Nondisclosure of information filed with the Commission and with any exchange.

Except as otherwise provided in this rule, confidential treatment requests shall be submitted in paper format only, whether or not the filer is required to submit a filing in electronic format.

* * * * *

(i) An institutional investment manager shall omit the confidential portion from the material publicly filed in electronic format pursuant to section 13(f) of the Act (15 U.S.C. 78m(f)) and the rules and regulations thereunder. The institutional investment manager shall indicate in the appropriate place in the material publicly filed that the confidential portion has been so omitted and filed separately with the Commission. In lieu of the procedures described in paragraph (b) of this section, an institutional investment manager shall request confidential treatment electronically pursuant to section 13(f) of the Act (15 U.S.C. 78m(f)) and the rules and regulations thereunder.

PART 249—FORMS, SECURITIES EXCHANGE ACT OF 1934

■ 9. The general authority citation for part 249 continues to read as follows:

Authority: 15 U.S.C. 78a *et seq.* and 7201 *et seq.;* 12 U.S.C. 5461 *et seq.;* and 18 U.S.C. 1350; Sec. 953(b), Pub. L. 111–203, 124 Stat. 1904; Sec. 102(a)(3), Pub. L. 112–106, 126 Stat. 309 (2012), Sec. 107, Pub. L. 112–106, 126 Stat. 313 (2012), Sec. 72001, Pub. L. 114–94, 129 Stat. 1312 (2015), and secs. 2 and 3 Pub. L. 116–222, 134 Stat. 1063 (2020), unless otherwise noted.

* * * * *

Note: The text of Form 13F does not, and these amendments will not, appear in the Code of Federal Regulations.

■ 10. Revise Form 13F (referenced in § 249.325) to read as follows:

BILLING CODE 8011–01–P

OMB APPROVAL	
OMB Number:	3235-0006
Expires:	September 30, 2022
Estimated average burden hours per response.	23.8

UNITED STATES
SECURITIES AND EXCHANGE COMMISSION
Washington, DC 20549

Form 13F

INFORMATION REQUIRED OF INSTITUTIONAL INVESTMENT MANAGERS PURSUANT TO SECTION 13(f) OF THE SECURITIES EXCHANGE ACT OF 1934 AND RULES THEREUNDER

GENERAL INSTRUCTIONS

1. Rule as to Use of Form 13F. Institutional investment managers ("Managers") must use Form 13F for reports to the Commission required by Section 13(f) of the Securities Exchange Act of 1934 [15 U.S.C. 78m(f)] ("Exchange Act") and rule 13f-1 [17 CFR 240.13f-1] thereunder. Rule 13f-1(a) provides that every Manager which exercises investment discretion with respect to accounts holding Section 13(f) securities, as defined in rule 13f-1(c), having an aggregate fair market value on the last trading day of any month of any calendar year of at least $100,000,000 shall file a report on Form 13F with the Commission within 45 days after the last day of such calendar year and within 45 days after the last day of each of the first three calendar quarters of the subsequent calendar year.

2. Rules to Prevent Duplicative Reporting. If two or more Managers, each of which is required by rule 13f-1 to file a report on Form 13F for the reporting period, exercise investment discretion with respect to the same securities, only one such Manager must include information regarding such securities in its reports on Form 13F.

   A Manager having securities over which it exercises investment discretion that are reported by another Manager (or Managers) must identify the Manager(s) reporting on its behalf in the manner described in Special Instruction 5.

   A Manager reporting holdings subject to shared investment discretion must identify the other Manager(s) with respect to which the filing is made in the manner described in Special Instruction 7.

3. Filing of Form 13F. Rule 13f-1(a)(1) provides that a Manager must file a Form 13F report with the Commission within 45 days after the end of the calendar year and each of the first three calendar quarters of the subsequent calendar year. Form 13F must be filed electronically on the Commission's Electronic Data Gathering, Analysis, and Retrieval ("EDGAR") system, unless a hardship exemption has been granted. As required by Section 13(f)(5) of the Exchange Act, a Manager which is a bank, the deposits of which are insured in accordance with the Federal Deposit Insurance Act, must file with the appropriate regulatory agency for the bank a copy of every Form 13F report filed with the Commission pursuant to this subsection by or with respect to such bank. Filers can satisfy their obligation to file with other regulatory agencies by sending a copy either electronically (provided the Manager removes or blanks out the confidential access codes) or in paper.

4. Official List of Section 13(f) Securities. The official list of Section 13(f) securities published by the Commission ("13F List") lists the securities the holdings of which a Manager is to report on Form 13F. See rule 13f-1(c) [17 CFR 240.13f-1(c)]. Form 13F filers may rely on the current 13F List in determining whether they need to report any particular securities holding. The current 13F List is available on www.sec.gov/divisions/investment/13flists.htm. The 13F List is updated quarterly.

INSTRUCTIONS FOR CONFIDENTIAL TREATMENT REQUESTS

Pursuant to Section 13(f)(4) of the Exchange Act [15 U.S.C. 78m(f)(4)], the Commission (1) may prevent or delay public disclosure of information reported on this form in accordance with Section 552 of Title 5 of the United States Code, the Freedom of Information Act [5 U.S.C. 552], and (2) shall not disclose information reported on this form identifying securities held by the account of a natural person or an estate or trust (other than a business trust or investment company). A Manager must submit in accordance with the procedures for requesting confidential treatment any portion of a report which contains information identifying securities held by the account of a natural person or an estate or trust (other than a business trust or investment company).

SEC 1685 (1-12) Persons who respond to the collection of information contained in this form are not required to respond unless the form displays a currently valid OMB control number

A Manager should make requests for confidential treatment of information reported on this form in accordance with rule 24b-2(i) under the Exchange Act [17 CFR 240.24b-2]. Requests relating to the non-disclosure of information identifying the securities held by the account of a natural person or an estate or trust (other than a business trust or investment company) must so state but need not, include an analysis of any applicable exemptions from disclosure under the Freedom of Information Act [17 CFR 200.80].

Paragraph (i) of rule 24b-2 requires a Manager filing confidential information with the Commission to indicate at the appropriate place in the public filing that the confidential portion has been so omitted and filed separately with the Commission. A Manager must comply with this provision by including on the Summary Page, after the Report Summary and prior to the List of Other Included Managers, a statement that confidential information has been omitted from the public Form 13F report and filed separately with the Commission.

A Manager must file electronically, in accordance with rule 101(d) of Regulation S-T [17 CFR 232.101(d)], all requests for and information subject to the request for confidential treatment filed pursuant to Section 13(f)(4) of the Exchange Act.

A Manager requesting confidential treatment must provide enough factual support for its request to enable the Commission to make an informed judgment as to the merits of the request. The request must address all pertinent factors, including all of the following that are relevant:

1. If confidential treatment is requested as to more than one holding of securities, discuss each holding separately unless the Manager can identify a class or classes of holdings as to which the nature of the factual circumstances and the legal analysis are substantially the same.

2. If a request for confidential treatment is based upon a claim that the subject information is confidential, commercial or financial information, provide the information required by paragraphs 2.a through 2.e of this Instruction except that, if the subject information concerns security holdings that represent open risk arbitrage positions and no previous requests for confidential treatment of those holdings have been made, the Manager need provide only the information required in paragraph 2.f.

   a. Describe the investment strategy being followed with respect to the relevant securities holdings, including the extent of any program of acquisition and disposition (note that the term "investment strategy," as used in this instruction, also includes activities such as block positioning).

   b. Explain why public disclosure of the securities would, in fact, be likely to reveal the investment strategy; consider this matter in light of the specific reporting requirements of Form 13F (*e.g.*, securities holdings are reported only quarterly and may be aggregated in many cases).

   c. Demonstrate that such revelation of an investment strategy would be premature; indicate whether the Manager was engaged in a program of acquisition or disposition of the security both at the end of the quarter and at the time of the filing; and address whether the existence of such a program may otherwise be known to the public.

   d. Demonstrate whether the information is customarily and actually kept private by the Manager and that failure to grant the request for confidential treatment would be likely to cause harm to the Manager; show what use competitors could make of the information and how harm to the Manager could ensue.

   e. State, and provide justification for, the period of time for which confidential treatment of the securities holdings is requested. The time period specified may not exceed one (1) year from the date that the Manager is required to file the Form 13F report with the Commission.

   f. For securities holdings that represent open risk arbitrage positions, the request must include good faith representations that:

      i. the securities holding represents a risk arbitrage position open on the last day of the period for which the Form 13F report is filed; and

      ii. the reporting Manager has a reasonable belief as of the period end that it may not close the entire position on or before the date that the Manager is required to file the Form 13F report with the Commission.

      If the Manager makes these representations in writing at the time that the Form 13F is filed, the Commission will automatically accord the subject securities holdings confidential treatment for a period of up to one (1) year from the date that the Manager is required to file the Form 13F report with the Commission.

   g. At the expiration of the period for which confidential treatment has been granted pursuant to paragraph 2.e or 2.f of this Instruction ("Expiration Date") and unless a de

novo request for confidential treatment of the information that meets the requirements of paragraphs 2.a through 2.e of this Instruction is filed with the Commission at least fourteen (14) days in advance of the Expiration Date, the Manager will make such security holding(s) public as set forth in Confidential Treatment Instruction 4.

3. If the Commission grants a request for confidential treatment, it may delete details which would identify the Manager and use the information in tabulations required by Section 13(f)(4) absent a separate showing that such use of information could be harmful.

4. Unless a hardship exemption is available, the Manager must submit electronically within 6 business days of the expiration of confidential treatment or notification of denial, as applicable, a Form 13F amendment to its previously filed public Form 13F report(s) for the calendar quarter to list and publicly disclose the holding(s) as to which the Commission denied confidential treatment or for which confidential treatment has expired. Such Form 13F amendment must be timely filed: (i) upon the denial by the Commission of a request for confidential treatment; (ii), upon expiration of the time period for which a Manager has requested confidential treatment; or (iii) upon the expiration of the confidential treatment previously granted for a filing. If a Manager files an amendment, the amendment must not be a restatement; the Manager must designate it as an amendment which adds new holdings entries. The Manager must include at the top of the Form 13F Cover Page the following legend to correctly designate the type of filing being made:

THIS FILING LISTS SECURITIES HOLDINGS REPORTED ON THE FORM 13F FILED ON (DATE) PURSUANT TO A REQUEST FOR CONFIDENTIAL TREATMENT AND FOR WHICH (THAT REQUEST WAS DENIED/CONFIDENTIAL TREATMENT EXPIRED) ON (DATE).

SPECIAL INSTRUCTIONS

1. This form consists of three parts: the Form 13F Cover Page ("Cover Page"), the Form 13F Summary Page ("Summary Page"), and the Form 13F Information Table ("Information Table").

The Cover Page:

2. The period end date used in the report is the last day of the calendar year or quarter, as appropriate, even though that date may not be the same as the date used for valuation in accordance with Special Instruction 8.

3. Amendments to a Form 13F report must either restate the Form 13F report in its entirety or include only holdings entries that are being reported in addition to those already reported in a current public Form 13F report for the same period. If the Manager is filing the Form 13F report as an amendment, then, the Manager must check the amendment box on the Cover Page; enter the amendment number; and check the appropriate box to indicate whether the amendment (a) is a restatement or (b) adds new holdings entries. Each amendment must include a complete Cover Page and, if applicable, a Summary Page and Information Table. See rule 13f-1(a)(2) [17 CFR 240.13f-1(a)(2)].

4. Present the Cover Page and the Summary Page information in the format and order provided in the form. If the Manager has a number assigned by the Financial Industry Regulatory Authority's Central Registration Depository system or by the Investment Adviser Registration Depository system ("CRD number"), provide the Manager's CRD number. If the Manager has a file number (*e.g.*, 801-, 8-, 866-, 802-) assigned by the Commission ("SEC file number"), provide the Manager's SEC file number. The Cover Page may include information in addition to the required information, so long as the additional information does not, either by its nature, quantity, or manner of presentation, impede the understanding or presentation of the required information. Place all additional information after the signature of the person signing the report (immediately preceding the Report Type section). Do not include any additional information on the Summary Page or in the Information Table.

5. Designate the Report Type for the Form 13F report by checking the appropriate box in the Report Type section of the Cover Page, and include, where applicable, the List of Other Managers Reporting for this Manager (on the Cover Page), the Summary Page and the Information Table, as follows:

   a. If all of the securities with respect to which a Manager has investment discretion are reported by another Manager (or Managers), check the box for Report Type "13F NOTICE," include (on the Cover Page) the List of Other Managers Reporting for this Manager, and omit both the Summary Page and the Information Table.

   b. If all of the securities with respect to which a Manager has investment discretion are reported in this report, check the box for Report Type "13F HOLDINGS REPORT," omit from the Cover Page the List of Other Managers Reporting for this Manager, and include both the Summary Page and the Information Table.

   c. If only part of the securities with respect to which a Manager has investment discretion is reported by another Manager (or Managers), check the box for Report Type "13F COMBINATION REPORT," include (on the Cover Page) the List of Other Managers Reporting for this Manager, and include both the Summary Page and the Information Table.

Summary Page:

6. Include the Report Summary, containing the Number of Other Included Managers, the Information Table Entry Total and the Information Table Value Total.

   a. Enter as the Number of Other Included Managers the total number of other Managers listed in the List of Other Included Managers, not counting the Manager filing this report. See Special Instruction 7. If none, enter the number zero ("0").

   b. Enter as the Information Table Entry Total the total number of line entries providing holdings information included in the Information Table.

   c. Enter as the Information Table Value Total the aggregate fair market value of all holdings reported in this report, i.e., the total for Column 4 (Fair Market Value) of all line entries in the Information Table. The Manager must express this total as a rounded figure, corresponding to the individual Column 4 entries in the Information Table. See Special

Instruction 8.

d. Check the box on the Summary Page of the public Form 13F report if confidential treatment is being requested for some or all of the Manager's holdings for this quarter-end period.

7. Include the List of Other Included Managers. Use the title, column headings and format provided.

a. If this Form 13F report does not report the holdings of any Manager other than the Manager filing this report, enter the word "NONE" under the title and omit the column headings and list entries.

b. If this Form 13F report reports the holdings of one or more Managers other than the Manager filing this report, enter in the List of Other Included Managers all such Managers together with any CRD Number or SEC file number assigned to each Manager and, if known, the Managers' respective Form 13F file numbers (The Form 13F file numbers are assigned to Managers when they file their first Form 13F). Assign a number to each Manager in the List of Other Included Managers, and present the list in sequential order. The numbers need not be consecutive. The List of Other Managers must include all other Managers identified in Column 7 of the Information Table. Do not include the Manager filing this report.

Information Table:

8. In determining fair market value, use the value at the close of trading on the last trading day of the calendar year or quarter, as appropriate. Enter values rounded to the nearest dollar.

9. A Manager may omit holdings otherwise reportable if the Manager holds, on the period end date, fewer than 10,000 shares (or less than $200,000 principal amount in the case of convertible debt securities) and less than $200,000 aggregate fair market value (and option holdings to purchase only such amounts).

10. A Manager must report holdings of options only if the options themselves are Section 13(f) securities. For purposes of the $100,000,000 reporting threshold, the Manager should consider only the value of such options, not the value of the underlying shares. The Manager must give the entries in Columns 1 through 5 and in Columns 7 and 8 of the Information Table, however, in terms of the securities underlying the options, not the options themselves. The Manager must answer Column 6 in terms of the discretion to exercise the option. The Manager must make a separate segregation in respect of securities underlying options for entries for each of the columns, coupled with a designation "PUT" or "CALL" following such segregated entries in Column 5, referring to securities subject respectively to put and call options. A Manager is not required to provide an entry in Column 8 for securities subject to reported call options.

11. Furnish the Information Table using the table title, column headings and format provided. Provide column headings once at the beginning of the Information Table; repetition of column headings on subsequent pages is not required. Present the table in accordance with the column instructions provided in Special Instructions 11.b.i through 12.b.viii. Do not

include any additional information in the Information Table. Begin the Information Table on a new page; do not include any portion of the Information Table on either the Cover Page or the Summary Page.

a. When entering information in Columns 4 through 8 of the Information Table, list securities of the same issuer and class with respect to which the Manager exercises sole investment discretion separately from those with respect to which investment discretion is shared. Special Instruction 11.b.vi for Column 6 describes in detail how to report shared investment discretion.

b. Instructions for each column in the Information Table:

i. Column 1. Name of Issuer. Enter in Column 1 the name of the issuer for each class of security reported as it appears in the current 13F List published by the Commission in accordance with rule 13f-1(c). Reasonable abbreviations are permitted.

ii. Column 2. Title of Class. Enter in Column 2 the title of the class of the security reported as it appears in the 13F List. Reasonable abbreviations are permitted.

iii. Column 3. CUSIP Number and, Share Class level Financial Instrument Global Identifier (FIGI). Enter in Column 3 the nine (9) digit CUSIP number. A Manager also may optionally enter the twelve (12) character alphanumeric FIGI of the security in Column 3.

iv. Column 4. Market Value. Enter in Column 4 the market value of the holding of the particular class of security as prescribed by Special Instruction 8.

v. Column 5. Amount and Type of Security. Enter in Column 5 the total number of shares of the class of security or the principal amount of such class. Use the abbreviation "SH" to designate shares and "PRN" to designate principal amount. If the holdings being reported are put or call options, enter the designation "Put" or "Call," as appropriate

vi. Column 6. Investment Discretion. Segregate the holdings of securities of a class according to the nature of the investment discretion held by the Manager. Designate investment discretion as "sole" (SOLE); "shared-defined" (DEFINED); or "shared-other" (OTHER), as described below:

(A) Sole. Designate as "sole" securities over which the Manager exercised sole investment discretion. Report "sole" securities on one line. Enter the word "SOLE" in Column 6.

(B) Shared-Defined. If investment discretion is shared with controlling and controlled companies (such as bank holding companies and their subsidiaries); investment advisers and investment companies advised by those advisers; or insurance companies and their separate accounts, then designate investment discretion as "shared-defined" (DEFINED).

For each holding of DEFINED securities, segregate the securities into two

categories: those securities over which investment discretion is shared with another Manager or Managers on whose behalf this Form 13F report is being filed, and those securities over which investment discretion is shared with any other person, other than a Manager on whose behalf this Form 13F report is being filed.

Enter each of the two segregations of DEFINED securities holdings on a separate line, and enter the designation "DFND" in Column 6. See Special Instruction vii for Column 7.

(C) Shared-Other. Designate as "shared-other" securities (OTHER) those over which investment discretion is shared in a manner other than that described in Special Instruction (B) above.

For each holding of OTHER securities, segregate the securities into two categories: those securities over which investment discretion is shared with another Manager or Managers on whose behalf this Form 13F report is being filed, and those securities over which investment discretion is shared with any other person, other than a Manager on whose behalf this Form 13F report is being filed.

Enter each segregation of OTHER securities holdings on a separate line, and enter the designation "OTR" in Column 6. See Special Instruction vii for Column 7.

NOTE: A Manager is deemed to share discretion with respect to all accounts over which any person under its control exercises discretion. A Manager of an institutional account, such as a pension fund or investment company, is not deemed to share discretion with the institution unless the institution actually participated in the investment decision-making.

vii. Column 7. Other Managers. Identify each other Manager on whose behalf this Form 13F report is being filed with whom investment discretion is shared as to any reported holding by entering in this column the number assigned to the Manager in the List of Other Included Managers.

Enter this number in Column 7 opposite the segregated entries in Columns 4, 5, and 8 (and the relevant indication of shared discretion set forth in Column 6) as required by the preceding special instruction. Enter no other names or numbers in Column 7.

A Manager must report the conditions of sharing discretion with other Managers consistently for all holdings reported on a single line.

viii. Column 8. Voting Authority. Enter the number of shares for which the Manager exercises sole, shared, or no voting authority (none) in this column, as appropriate.

The Commission deems a Manager exercising sole voting authority over specified "routine" matters, and no authority to vote in "non-routine" matters, for purposes

of this Form 13F report to have no voting authority. "Non-routine" matters include a contested election of directors, a merger, a sale of substantially all the assets, a change in the articles of incorporation affecting the rights of shareholders, and a change in fundamental investment policy; "routine" matters include selection of an accountant, uncontested election of directors, and approval of an annual report.

If voting authority is shared only in a manner similar to a sharing of investment discretion which would call for a response of "shared-defined" (DEFINED) under Column 6, a Manager should report voting authority as sole under subdivision (a) of Column 8, even though the Manager may be deemed to share investment discretion with that person under Special Instruction 11.b.vi.

Filing of Reports

12. Reports must be filed electronically using EDGAR in accordance with Regulation S-T. Consult the EDGAR Filer Manual and Appendices for EDGAR filing instructions.

PAPERWORK REDUCTION ACT INFORMATION

Persons who are to respond to the collection of information contained in this form are not required to respond to the collection of information unless the form displays a currently valid Office of Management and Budget ("OMB") control number.

UNITED STATES
SECURITIES AND EXCHANGE COMMISSION
Washington, D.C. 20549

Form 13F

FORM 13F COVER PAGE

Report for the Calendar Year or Quarter Ended:

Check here if Amendment ☐ Amendment Number:
This Amendment (Check only one.): ☐ is a restatement.
☐ adds new holdings entries.

Institutional Investment Manager Filing this Report:

Name:
Address:

_____

_____

Form 13F File Number: 28-_____

CRD Number (if applicable):_____
SEC File Number (if applicable):_____

The institutional investment manager filing this report and the person by whom it is signed hereby represent that the person signing the report is authorized to submit it, that all information contained herein is true, correct and complete, and that it is understood that all required items, statements, schedules, lists, and tables, are considered integral parts of this form.

Person Signing this Report on Behalf of Reporting Manager:

Name:
Title:
Phone:

Signature, Place, and Date of Signing:

_____	_____	_____
[Signature]	[City, State]	[Date]

Report Type (Check only one.):

☐ 13F HOLDINGS REPORT. (Check here if all holdings of this reporting manager are reported in this report.)

☐ 13F NOTICE. (Check here if no holdings reported are in this report, and all holdings are reported by other reporting manager(s).)

☐ 13F COMBINATION REPORT. (Check here if a portion of the holdings for this reporting manager are reported in this report and a portion are reported by other reporting manager(s).)

List of Other Managers Reporting for this Manager:
[If there are no entries in this list, omit this section.]

Name	Form 13F File No.	CRD No. (if applicable)	SEC File No. (if applicable)
_____	28-_____	_____	_____

[Repeat as necessary.]

FORM 13F SUMMARY PAGE

Report Summary:

Number of Other Included Managers:

Form 13F Information Table Entry Total:

Form 13F Information Table Value Total:

(round to nearest dollar)

[ ] Confidential Treatment Requested. (The Manager has omitted from this public Form 13F one or more holding(s) for which it is requesting confidential treatment from the U.S. Securities and Exchange Commission pursuant to section 13(f) of the Exchange Act and rule 24b-2 thereunder)

List of Other Included Managers:

Provide a numbered list of the name(s) and Form 13F file number(s) of all institutional investment managers with respect to which this report is filed, other than the manager filing this report.

[If there are no entries in this list, state "NONE" and omit the column headings and list entries.]

No.	Name	Form 13F File No.	CRD No. (if applicable)	SEC File No. (if applicable)
_	_____	28-_____	_____	_____

[Repeat as necessary.]

FORM 13F INFORMATION TABLE

COLUMN 1	COLUMN 2	COLUMN 3	COLUMN 4		COLUMN 5			COLUMN 6	COLUMN 7	COLUMN 8		
NAME OF ISSUER	TITLE OF CLASS	CUSIP	FIGI	VALUE (to the nearest dollar)	SHRS OR PRN AMT	SH/ PRN	PUT/ CALL	INVESTMENT DISCRETION	OTHER MANAGER	VOTING AUTHORITY		
										SOLE	SHARED	NONE

BILLING CODE 8011–01–C

PART 270—RULES AND REGULATIONS, INVESTMENT COMPANY ACT OF 1940

■ 11. The general authority citation for part 270 continues to read as follows:

Authority: 15 U.S.C. 80a-1 et seq., 80a-34(d), 80a-37, 80a-39, and Pub. L. 111–203, sec. 939A, 124 Stat. 1376 (2010), unless otherwise noted.

* * * * *

§ 270.0–2 [Amended]

■ 12. Amend § 270.0–2 by:

■ a. Adding the phrase ''Secretary of the'' after ''be delivered through the mails or otherwise to the'' in the first sentence in paragraph (a); and

■ b. Removing the fifth sentence in paragraph (b).

PART 275—RULES AND REGULATIONS, INVESTMENT ADVISERS ACT OF 1940

■ 13. The general authority citation for part 275 continues to read as follows:

Authority: 15 U.S.C. 80b-2(a)(11)(G), 80b-2(a)(11)(H), 80b-2(a)(17), 80b-3, 80b-4, 80b-4a, 80b-6(4), 80b-6a, and 80b-11, unless otherwise noted.

* * * * *

■ 14. Amend § 275.0–4 by:

■ a. Adding the phrase ''Secretary of the'' after ''be delivered through the mails or otherwise to the'' in the first sentence in paragraph (a)(1);
■ b. Revising paragraphs (b) and (d);
■ c. Removing and reserving paragraph (g); and
■ d. Revising paragraph (i).

The revisions read as follows:

§ 275.0–4 General requirements of papers and applications.

* * * * *

(b) *Formal specifications respecting applications.* Every application for an order under any provision of the Act, for which a form with instructions is not specifically prescribed, and every amendment to such application, shall be filed electronically pursuant to 17 CFR part 232 (Regulation S–T). Any filings made in paper, including filings made pursuant to a hardship exemption under Regulation S–T, shall be filed in quintuplicate. One copy shall be signed by the applicant, but the other four copies may have facsimile or typed signatures. Such applications shall be on paper no larger than 8½ x 11 inches in size. To the extent that the reduction of larger documents would render them illegible, those documents may be filed on paper larger than 8½ x 11 inches in size. The left margin should be at least 1½ inches wide and, if the application is bound, it should be bound on the left side. All typewritten or printed matter (including deficits in financial statements) should be set forth in black so as to permit photocopying.

* * * * *

(d) *Verification of applications and statements of fact.* Every application for an order under any provision of the Act, for which a form with instructions is not specifically prescribed, and every amendment to such application, and every statement of fact formally filed in support of, or in opposition to, any application or declaration shall be verified by the person executing the same. An instrument executed on behalf of a corporation shall be verified in substantially the following form, but suitable changes may be made in such form for other kinds of companies and for individuals:

The undersigned states that he or she has duly executed the attached dated , 20__, for and on behalf of (Name of company); that he or she is the (Title of officer) of such company; and that all action by stockholders, directors, and other bodies necessary to authorize the undersigned to execute and file such instrument has been taken. The undersigned further states that he or she is familiar with such instrument, and the contents thereof, and that the facts therein set forth are true to the best of his or her knowledge, information and belief.

(Signature)

* * * * *

(i) The manually signed original (or in the case of duplicate originals, one duplicate original) of all registrations, applications, statements, reports, or other documents filed under the Investment Advisers Act of 1940, as amended, shall be numbered sequentially (in addition to any internal numbering which otherwise may be present) by handwritten, typed, printed, or other legible form of notation from the facing page of the document through the last page of that document and any exhibits or attachments thereto. Further, the total number of pages contained in a numbered original shall be set forth on the first page of the document.

■ 15. Amend § 275.203–1 by adding paragraph (d) to read as follows:

§ 275.203–1 Application for investment adviser registration.

* * * * *

(d) *Form ADV–NR*—(1) *General Requirements.* Each non-resident, as defined in 17 CFR 275.0–2(b)(2) (Rule 0–2(b)(2)), general partner or a non-resident managing agent, as defined in 17 CFR 275.0–2(b)(2) (Rule 0–2(b)(1)), of any investment adviser registered, or applying for registration with, the Commission must submit Form ADV–NR (17 CFR 279.4). Form ADV–NR must be completed in connection with the adviser's initial registration with the Commission. If a person becomes a non-resident general partner or a non-resident managing agent after the date the adviser files its initial registration with the Commission, the person must file Form ADV–NR with the Commission within 30 days of becoming a non-resident general partner or a non-resident managing agent. If a person serves as a general partner or managing agent for multiple advisers, they must submit a separate Form ADV–NR for each adviser.

(2) *When an amendment is required.* Each non-resident general partner or a non-resident managing agent of any investment adviser must amend its Form ADV–NR within 30 days whenever any information contained in the form becomes inaccurate by filing with the Commission a new Form ADV–NR.

(3) *Electronic filing.* Form ADV–NR (and any amendments to Form ADV–NR) must be filed electronically through the Investment Adviser Registration Depository (IARD), unless a hardship exemption under 17 CFR 275.203–3 (Rule 203–3) has been granted.

(4) *When filed.* Each Form ADV–NR is considered filed with the Commission upon acceptance by the IARD.

(5) *Filing fees.* No fee shall be assessed for filing Form ADV–NR through IARD.

(6) *Form ADV–NR is a report.* Each Form ADV–NR (and any amendment to Form ADV–NR) required to be filed under this rule is a ''report'' within the meaning of sections 204 and 207 of the Act.

PART 279—FORMS PRESCRIBED UNDER THE INVESTMENT ADVISERS ACT OF 1940

■ 16. The authority citation for part 279 continues to read as follows:

Authority: The Investment Advisers Act of 1940, 15 U.S.C. 80b-1, *et seq.,* Pub. L. 111–203, 124 Stat. 137617.

■ 17. In Form ADV (referenced in § 279.1):

■ a. Amend the instructions to the form by revising the section entitled ''Who is required to file Form ADV–NR?''; and

■ b. Amend the instructions to the form by adding a section entitled ''How is Form ADV–NR filed?''.

The revision and addition read as follows:

Note: The text of Form ADV does not, and this amendment will not, appear in the Code of Federal Regulations.

BILLING CODE 8011–01–P

FORM ADV (Paper Version)

• UNIFORM APPLICATION FOR INVESTMENT ADVISER REGISTRATION AND

• REPORT FORM BY EXEMPT REPORTING ADVISERS

Form ADV: General Instructions

* * * * *

19. Who is required to file Form ADV-NR?

Every *non-resident* general partner and *managing agent* of all SEC-registered advisers and *exempt reporting advisers*, whether or not the adviser is a resident in the United States, must file Form ADV-NR in connection with the adviser's initial application or report. A general partner or *managing agent* of an SEC-registered adviser or *exempt reporting adviser* who becomes a *non-resident* after the adviser's initial application or report has been submitted must file Form ADV-NR within 30 days. Absent a temporary hardship, Form ADV-NR must be filed electronically through IARD.

Failure to file Form ADV-NR promptly may delay SEC consideration of your initial application.

20. How is Form ADV-NR filed?

Form ADV-NR is filed electronically with the Investment Adviser Registration Depository (IARD). Information for how to file with IARD is available on the SEC's website at www.sec.gov/iard and on www.iard.com]

BILLING CODE 8011–01–C

■ 18. Revise § 279.4 to read as follows:

§ 279.4 Form ADV–NR, appointment of agent for service of process by non-resident general partner and non-resident managing agent of an investment adviser.

This form shall be filed and amended pursuant to § 275.203–1 of this chapter (Rule 203–1) as an appointment of agent for service of process by non-resident general partners and non-resident managing agents of an investment adviser pursuant to section 203 of the Investment Advisers Act of 1940.

■ 19. Form ADV–NR (referenced in § 279.4) is amended by adding the sections entitled ''Instructions to Form ADV–NR'', ''Who is required to file Form ADV–NR?'' and ''How is Form ADV–NR filed?'' to read as follows:

Note: The text of Form ADV–NR does not, and this amendment will not, appear in the Code of Federal Regulations.

Form ADV–NR (Paper Version)

Appointment of Agent for Service of Process by Non–Resident General Partner and Non–Resident Managing Agent of an Investment Adviser

Instructions to Form ADV–NR

Note: Unless the context clearly indicates otherwise, all terms used in the Form have the same meaning as in the Investment Advisers Act of 1940, the General Rules and Regulations of the Commission thereunder (17 Code of Federal Regulations 275), and in the Glossary of Terms to Form ADV.

1. Who is required to file Form ADV–NR?

Every *non-resident* general partner and *managing agent* of *all* SEC-registered advisers and *exempt reporting advisers,* whether or not the adviser is a resident in the United States, must file Form ADV–NR in connection with the adviser's initial application or report. A general partner or *managing agent* of an SEC-registered adviser or *exempt reporting adviser* who becomes a *non-resident* after the adviser's initial application or report has been submitted must file Form ADV–NR within 30 days. Absent a temporary hardship exemption, Form ADV–NR must be filed electronically.

Failure to file Form ADV–NR promptly may delay SEC consideration of your initial application.

2. How is Form ADV–NR filed?

Form ADV–NR is filed electronically with the Investment Adviser Registration Depository (IARD). Information for how to file with IARD is available on the SEC's website at *www.sec.gov/iard and on www.iard.com*

BILLING CODE 8011–01–P

Form ADV-NR (Paper Version)

APPOINTMENT OF AGENT FOR SERVICE OF PROCESS BY NON-RESIDENT GENERAL PARTNER AND NON-RESIDENT MANAGING AGENT OF AN INVESTMENT ADVISER

You must submit this Form ADV-NR if you are a *non-resident* general partner or a *non-resident managing agent* of any investment adviser (domestic or *non-resident*). Form ADV-NR must be signed and submitted in connection with the adviser's initial Form ADV submission. If the mailing address you list below changes, you must file an amended Form ADV-NR to provide the current address. If you become a *non-resident* general partner or a *non-resident managing agent* after the date the adviser files its initial Form ADV, you must file Form ADV-NR with the Commission within 30 days of the date that you became a *non-resident* general partner or a *non-resident managing agent*. If you serve as a general partner or *managing agent* for multiple advisers, you must submit a separate Form ADV-NR for each adviser.

1. Appointment of Agent for Service of Process

By signing this Form ADV-NR, you, the undersigned *non-resident* general partner or *non-resident managing agent,* irrevocably appoint each of the Secretary of the SEC, and the Secretary of State, or equivalent officer, of the state in which the adviser referred to in this form maintains its *principal office and place of business*, if applicable, and any other state in which the adviser is applying for registration, amending its registration, or submitting a *notice filing*, as your agents to receive service, and agree that such *persons* may accept service on your behalf, of any notice, subpoena, summons, *order* instituting *proceedings*, demand for arbitration, or other process or papers, and you further agree that such service may be made by registered or certified mail, in any Federal or State action, administrative *proceeding* or arbitration brought against you in any place subject to the jurisdiction of the United States, if the action, *proceeding* or arbitration: (a) arises out of any activity in connection with the investment adviser's business that is subject to the jurisdiction of the United States, and (b) is *founded*, directly or indirectly, upon the provisions of: (i) the Securities Act of 1933, the Securities Exchange Act of 1934, the Trust Indenture Act of 1939, the Investment Company Act of 1940, or the Investment Advisers Act of 1940, or any rule or regulation under any of these acts, or (ii) the laws of the state in which the adviser referred to in this Form maintains its *principal office and place of business*, if applicable, or of any state in which the adviser is applying for registration, amending its registration, or submitting a *notice filing*.

2. Appointment and Consent: Effect on Partnerships

If you are organized as a partnership, this irrevocable power of attorney and consent to service of process will continue in effect if any partner withdraws from or is admitted to the partnership, provided that the admission or withdrawal does not create a new partnership. If the partnership dissolves, this irrevocable power of attorney and consent shall be in effect for any action brought against you or any of your former partners.

Signature

I, the undersigned *non-resident* general partner or *non-resident managing agent,* certify, under penalty of perjury under the laws of the United States of America, that the information contained in this Form ADV-NR is true and correct and that I am signing this Form ADV-NR as a free and voluntary act.

Signature of Partner or Agent:

_____ Date: _____

Printed Name: _____ Title: _____

Mailing Address of Partner or Agent (no P.O. Boxes):

_____

_____

_____

_____

Signature of Investment Adviser:

_____ Date: _____

Printed Name: _____ Title: _____

Adviser SEC File Number: 801-_____ or 802-_____

Adviser *CRD* Number: _____

Adviser Name:

PRIVACY ACT STATEMENT. Section 211(a) of the Advisers Act [15 U.S.C. § 80b-11(a)] authorizes the Commission to collect the information required by Form ADV-NR. The Commission collects this information to ensure that a non-resident general partner or managing agent of an investment adviser appoints an agent for service of process in the United States. Filing Form ADV-NR is mandatory for non-resident general partners and non-resident managing agents of investment advisers. The Commission maintains the information submitted on Form ADV-NR and makes it publicly available. The Commission may return forms that do not include required information. Intentional misstatements or omissions constitute Federal criminal violations under 18 U.S.C. § 1001 and 15 U.S.C. § 80b-17. The information contained in Form ADV-NR is part of a system of records subject to the Privacy Act of 1974, as amended. The Commission has published in the Federal Register the Privacy Act System of Records Notice for these records.

SEC'S COLLECTION OF INFORMATION. An agency may not conduct or sponsor, and a person is not required to respond to, a collection of information unless it displays a currently valid control number. Section 211(a) of the Advisers Act authorizes the Commission to collect the information on this Form from applicants. *See* 15 U.S.C. § 80b-11(a). Filing of this Form is mandatory for non-resident general partners or managing agents of investment advisers. The principal purpose of this collection of information is to ensure that a non-resident general partner or managing agent of an investment adviser appoints an agent for service of process in the United States. The Commission will maintain files of the information on Form ADV-NR and will make the information publicly available. Any member of the public may direct to the Commission any comments concerning the accuracy of the burden estimate on page one of Form ADV-NR, and any suggestions for reducing this burden. This collection of information has been reviewed by the Office of Management and Budget in accordance with the clearance requirements of 44 U.S.C. § 3507.

By the Commission.

Dated: June 23, 2022.

Vanessa A. Countryman,

Secretary.

[FR Doc. 2022–13936 Filed 6–29–22; 8:45 am]

BILLING CODE 8011–01–C

DEPARTMENT OF STATE

22 CFR Part 135

[Public Notice: 11720]

RIN 1400–AF52

Implementation of HAVANA Act of 2021

AGENCY: Department of State.

ACTION: Interim final rule; request for comments.

SUMMARY: This rule provides implementation by the Department of State (the Department) of the HAVANA Act of 2021. The Act provides authority for the Secretary of State and other agency heads to provide payments to certain individuals who have incurred qualifying injuries to the brain. This rule covers current and former Department of State employees, and dependents of current or former employees.

DATES:

Effective date: This interim final rule is effective August 15, 2022.

Comment due date: The Department of State will accept comments on this interim final rule until August 1, 2022.

ADDRESSES: Interested parties may submit comments by one of the following methods:

- *Email: AHIRule@state.gov* with the subject line, HAVANA ACT RULE.
- *Internet:* At *www.Regulations.gov,* search for this document using Docket DOS–2022–0016.

Note that all submissions to *regulations.gov* are public, and the Department cannot edit the comments to remove personal information. If you have any concern about your comment being viewed by the public, please use the email option above.

FOR FURTHER INFORMATION CONTACT: Susan Ware Harris, Senior Advisor, Health Incidents Response Task Force *HARuleInfo@state.gov.*

SUPPLEMENTARY INFORMATION: This rule implements the HAVANA Act of 2021, Public Law 117–46, codified in 22 U.S.C. 2680b(i).

Background and Authority—§ 135.1

On December 20, 2019, Congress gave authority (Pub. L. 116–94, Division J, Title IX, section 901) (codified in 22 U.S.C. 2680b) to the Department of State to pay benefits to employees and their dependents for injuries suffered in Cuba or China after January 1, 2016, in connection with certain hostile or other incidents designated by the Secretary of State. These benefits were limited to State Department employees only (*i.e.,* not other employees under Chief of Mission (COM) authority). The Department implemented this authority in the Foreign Affairs Manual (FAM), 3 FAM 3660.

On January 1, 2021, Congress amended this law (Pub. L. 116–283, div. A, title XI, section 1110), authorizing other federal government agencies (such as the Department of Agriculture) to provide benefits to their own employees under COM authority who suffered similar injuries.

On October 8, 2021, the ''Helping American Victims Affected by Neurological Attacks'' (HAVANA) Act of 2021 became law (Pub. L. 117–46). In this latest Act, Congress authorized federal government agencies to compensate affected current employees, former employees, and their dependents for qualifying injuries to the brain. This law requires the Department (and other agencies) to ''prescribe regulations'' implementing the HAVANA Act not later than 180 days after the effective date of the Act. Section 3 of the HAVANA Act of 2021 removed the requirement in Public Law 116–94, Division J, Title IX, Section 901, that the qualifying injury occur in ''the Republic of Cuba, People's Republic of China, or other foreign country designated by the Secretary of State'' for the purpose of making a payment under the HAVANA Act. This interim final rule only implements the HAVANA Act of 2021.

The regulation herein applies only to current and former employees of the Department of State, and dependents of current or former employees, as defined in § 135.2 of this rule. (Current employees will also continue to be covered by 3 FAM 3660 and its subchapters.) Upon publication of this rule, the Department will add a new subsection in 3 FAM 3660.It is the Department's position that each federal agency seeking to provide benefits to an employee, former employee, or dependent of a current or former employee must implement its own authorizing regulations.

Definitions—§ 135.2

The rule follows the definitional template provided in the HAVANA Act and its predecessors. The rule defines certain categories of individuals as employees (and thus covered under the Foreign Affairs Manual), as well as those who are not considered employees.

With respect to covered employees, this rule maintains the previous statutory requirement that the qualifying injury occurred on or after January 1, 2016. Similarly, with respect to dependents, this rule maintains the previous statutory requirement that the

qualifying injury occurred on or after January 1, 2016, while the employee sponsor was a covered employee of the Department of State. Since geographical restrictions have been removed by the HAVANA Act for the purpose of making a payment under the Act, this rule defines ''covered dependent'' as any family member of a Department current or former employee, without any restriction on where the Department employee was posted. The rule uses the Department's definition of ''eligible family member'' in 14 FAM 511.3 to define ''dependent'', as set out below.

The term ''covered employee'' captures Department of State Foreign Service Officers; Department of State Foreign Service Specialists; Department of State Civil Service employees; Consular Affairs—Appointment Eligible Family Member Adjudicator positions; Expanded Professional Associates Program members; Family Member Appointments; Foreign Service Family Reserve Corps; employees on Limited Non-Career Appointments; Temporary Appointments; personnel hired on a Personal Services Contract; and Locally Employed Staff, whether employed on a Personal Services Agreement, Personal Services Contract, or appointed to the position.

The term ''covered individual'' captures any former employee of the Department (including retired or separated employees) who, on or after January 1, 2016, became injured by reason of a qualifying injury to the brain while they were a covered employee of the Department.

The term ''covered dependent'' captures a family member of a Department current or former employee who, on or after January 1, 2016, becomes injured by reason of a qualifying injury to the brain while the dependent's sponsor was a covered employee of the Department. For purposes of determining whether someone is a covered dependent, the term ''family members'' includes unmarried children under 21 years of age (or certain other children); parents; sisters and brothers; and spouse. Step-parents and step-siblings are included in the definition.

The definition of ''qualifying injury to the brain'' is based on current medical practices related to brain injuries. Further, the injury must have occurred in connection with certain hostile acts, including war, terrorist activity, or other incidents designated by the Secretary of State, and must not have been the result of the willful misconduct of the covered individual. The individual must have: an acute injury to the brain such as, but not limited to, a concussion, penetrating injury, or as the consequence of an event that leads to permanent alterations in brain function as demonstrated by confirming correlative findings on imaging studies (to include computed tomography scan (CT), or magnetic resonance imaging scan (MRI)), or electroencephalogram (EEG); or a medical diagnosis of a traumatic brain injury (TBI) that required active medical treatment for 12 months or more; or acute onset of new persistent, disabling neurologic symptoms as demonstrated by confirming correlative findings on imaging studies (to include CT, MRI), EEG, physical exam, or other appropriate testing, and that required active medical treatment for 12 months or more.

In developing this definition, the Department consulted with the chief medical officers at other Federal agencies, and experts at civilian medical centers of excellence. There is no ICD–10 diagnostic code or criteria for AHIs (International Classification of Diseases, Tenth Revision, Clinical Modification (ICD–10–CM)). Because of the varied symptoms and still-nascent understanding of how to test or otherwise screen for AHI impacts, the Department sought to establish a standard that it believes will be broadly inclusive of the types of injuries that have been reported by covered individuals to date.

The first component of the definition in § 135.2 ''Qualifying injury to the brain'' (paragraph (2)(a)) accounts for a variety of observable impacts to an individual, including either a concussion, a penetrating injury, or absent either of those, the ability of an ABPN-certified neurologist to review one of a variety of forms of medical imaging evidence indicating permanent alterations in brain function. The Department's goal with this standard is to ensure there is some documented evidence of impact to the brain, while minimally circumscribing what that impact entails. The second and third components of the definition (paragraphs (2)(b) and (c) of the definition), only one of which must be satisfied, are intended to provide multiple avenues for demonstrating sustained, long-term impact to the individual. The Department believes that this benefit is intended for individuals who experience long-term consequences, potentially to include their inability to gainfully work, as a result of their reported possible AHI. Establishing a 12-month threshold of active medical treatment is indicative of a long-term injury. For example, the CDC broadly defines chronic diseases ''as conditions that last 1 year or more and require ongoing medical attention or limit activities of daily living or both.''

The Department notes that in adopting this definition, there may be eligible applicants who have suffered kinetic or external, physically-caused injuries to the brain such as the head being struck by an object, the head striking an object, the brain undergoing an acceleration or deceleration movement, or forces generated from events such as a blast or explosion, including penetrating injuries, if their injuries satisfy the other requirements of this rule.

The American Board of Psychiatry and Neurology (ABPN) remains the sole neurology board in the United States, maintaining strict professional requirements for membership. As such, the Department of State endorses this industry certification as the clinical standard for a neurologist upon evaluation of a qualifying injury to the brain.

The definition of ''other incident'' is a new onset of physical manifestations that cannot otherwise be explained. The Department notes that it maintains a non-public list of potential incidents based on internal reports it has collected from personnel and their dependents since 2016. While the Department believes this list to be reflective of known incidents to-date, the Department will work with any requestor upon submission of the DS–4316 (''Eligibility Questionnaire for HAVANA Act Payments'') to determine whether or not their alleged incident aligns with the Department's record of ''other incidents.''

Eligibility for Payments—§ 135.3

The Department will communicate with its entire workforce to inform them of the rule, regulations, and process for requesting payment The Department will work together with potential recipients to provide the necessary documentation to qualify for payment. In the majority of cases, potentially affected personnel are already known to the Department due to internal reporting after individuals experienced what they believe to be an AHI. While the Department believes these efforts will ensure all potential requestors will be able to identify themselves to the Department and begin the process of requesting a payment, the DS–4316, the form associated with developing the necessary evidence to submit a claim, will also be publicly hosted on State's eForms website with instructions on how to contact the Department if a requestor believes they are eligible for a HAVANA Act payment.

Section 135.3 states the conditions required before the Department will consider discretionary payments to former employees and dependents of current or former employees: the qualifying injury to the brain for a former employee must have occurred on or after January 1, 2016, and while the former employee was a covered employee of the Department; and for a dependent, the injury must have occurred on or after January 1, 2016, and while the dependent's sponsor was a covered employee of the Department. The Under Secretary for Management must approve any HAVANA Act payment.

As noted above, any payment to current Department employees will be processed using the procedures in 3 FAM 3660 and its subchapters.

Payments will be a one-time, non-taxable, lump sum payment, based on Level III of the Executive Schedule (see 5 U.S.C. 5311 *et seq.*). The payment is non-taxable pursuant to 22 U.S.C. 2680b(g). As indicated in § 135.3(e), in determining the amount of the payment, the Department will consider (1) the responses on the DS–4316, ''Eligibility Questionnaire for HAVANA Act Payments'' and (2) whether the Department of Labor (Workers' Compensation) has determined that the requestor has no reemployment potential, or the Social Security Administration has approved the requestor for Social Security Disability Insurance, or the requestor's ABPN-certified neurologist has certified that the individual requires a full-time caregiver for activities of daily living, as defined by the Katz Index of Independence of Daily Living.

The award thresholds are based on Level III of the Senior Executive Schedule (SES). Base will be 75 percent of Level III pay, and Base+ will be 100 percent of Level III pay. If the requestor meets any of the criteria listed in (e)(2) above, the requestor will be eligible to receive a Base+ payment. Requestors whose neurologists confirm that the definition of ''qualifying injury to the brain'' has been met but have not met any of the criteria listed in (e)(2) above, will be eligible to receive a Base payment. The criteria established in (e)(2) are reflective of the Department's objective of ensuring that the individuals most severely affected by AHIs (as indicated by a lack of reemployment potential, an inability to engage in substantial gainful activity, or the need for a full-time caregiver) receive additional payment. The specific use of the Department of Labor (DOL) or the Social Security Administration's (SSA) determination is to ensure that both federal employees as well as covered individuals and covered dependents have access to a mechanism for this determination. The Department recognizes that criteria DOL and SSA use in their disability determinations are distinct, as well as the fact that the procedural timelines for seeking and receiving approval may be different between these agencies. The third option, that an ABPN-certified neurologist certifies that the individual requires a full-time caregiver for activities of daily living (as defined by the Katz Index of Independence of Daily Living), provides an alternative mechanism for all individuals. Finally, the Department notes that if a requestor who received a Base payment later meets any of the criteria listed in (e)(2) above, the requestor may apply for an additional payment that will be the difference between the Base and Base+ payment. At the time of writing this rule (2022), a Base payment will be $140,475. A Base+ payment will be $187,300. As the payments are tied to the SES, the amounts will change over time based on increases to the Federal salary schedule.

The specific use of Level III of the SES sets the compensation at the maximum annual salary potentially available to most of the federal workforce. While payments under the HAVANA Act may be on top of other leave, disability, or workers' compensation payments the requestor is receiving or may be entitled to receive that also help augment any loss of income, the Department believes this is an appropriate additional payment. The Department also believes this amount is the most it can reasonably compensate each requestor while ensuring available funds for the total amount of requestors it believes will likely receive payments. The Department also notes that because payments are contingent on appropriated funds all payments will be paid out on a first come, first served basis.

Consultations With Other Agencies—§ 135.4

The Department of State will, to the extent possible, consult with the appropriate officials in other agencies to help identify personnel (current or former employees, or dependents) who served under Chief of Mission authority overseas and who might have suffered a qualifying injury to the brain on or after January 1, 2016. It will be the responsibility of the other agencies to publish regulations implementing the HAVANA Act and to provide payment for individuals affiliated with such agencies.

Regulatory Analysis

Administrative Procedure Act

This rule is being published as an interim final rule. Because this rule is a matter relating to public benefits, it is exempt from the requirements of 5 U.S.C. 553. *See* 5 U.S.C. 553(a)(2). Since the rule is exempt from the entirety of § 553 pursuant to § 553(a)(2), the provisions of § 553(d) do not apply and the rule could be in effect upon publication. However, the Department has determined it will set an effective date of 45 days after publication. In addition, it is in the public interest for the rule to have an expeditious effective date. However, the Department is seeking comment from interested persons on the provisions of this Rule and will consider all relevant comments in determining whether additional rulemaking is warranted under the provisions of the HAVANA Act.

Congressional Review Act

The Office of Information and Regulatory Affairs (OIRA) in the Office of Management and Budget (OMB) has determined that this rule is not a major rule as defined by 5 U.S.C. 804 for the purposes of Congressional review of agency rulemaking under the Small Business Regulatory Enforcement Fairness Act of 1996 (5 U.S.C. 801–808).

Unfunded Mandates Reform Act of 1995

This rule will not result in the expenditure by State, local, or tribal governments, in the aggregate, or by the private sector, of $100 million in any year; and it will not significantly or uniquely affect small governments. Therefore, no actions were deemed necessary under the provisions of the Unfunded Mandates Reform Act of 1995.

Executive Order 13175—Consultation and Coordination With Indian Tribal Governments

The Department has determined that this rulemaking will not have tribal implications, will not impose substantial direct compliance costs on Indian tribal governments, and will not pre-empt tribal law. Accordingly, the requirements of Executive Order 13175 do not apply to this rulemaking.

Regulatory Flexibility Act: Small Business

The Department of State certifies that this rulemaking will not have an impact on a substantial number of small entities. A regulatory flexibility analysis is not required under the Regulatory Flexibility Act (5 U.S.C. 601, *et seq.*).

Executive Order 12866 and Executive Order 13563

The Department of State has provided this interim final rule to OMB for its review. OIRA has designated this rule as ''significant'' under Executive Order 12866. Potential causes of AHI are being investigated but remain unknown. Given the nature of the incidents, it is difficult to accurately estimate future incidents and numbers of individuals affected. For Fiscal Year (FY) 2022, the Department has estimated that it would pay up to $5.6 million to 40 people. For FY 2023, the estimated numbers are up to $10.7 million to 76 people.

The Department has also reviewed the rule to ensure its consistency with the regulatory philosophy and principles set forth in Executive Order 12866 and finds that the benefits of the rule (in providing mechanisms for individuals to obtain compensation for certain injuries) outweigh any costs to the public, which are minimal. The Department of State has also considered this rulemaking in light of Executive Order 13563 and affirms that this proposed regulation is consistent with the guidance therein.

Executive Order 12988

The Department of State has reviewed this rule in light of Executive Order 12988 to eliminate ambiguity, minimize litigation, establish clear legal standards, and reduce burden.

Executive Orders 12372 and 13132

This rule will not have substantial direct effect on the states, on the relationships between the national government and the states, or on the distribution of power and responsibilities among the various levels of government. Therefore, in accordance with Executive Order 13132, it is determined that this rule does not have sufficient federalism implications to require consultations or warrant the preparation of a federalism summary impact statement. Executive Order 12372, regarding intergovernmental consultation on federal programs and activities, does not apply to this regulation.

Paperwork Reduction Act

This rulemaking is related to an information collection for the Form DS–4316, ''Eligibility Questionnaire for HAVANA Act Patients,'' OMB Control Number 1405–0250. This collection was approved under an emergency authorization. The Form DS–4316 has been uploaded to this rule's docket on *Regulations.gov* (please see **ADDRESSES** section above). The Department invites public comment on the form and on the anticipated burden associated with it. The Department is pursuing a routine three-year approval from OIRA, including an intent to publish 60- and 30-day **Federal Register** notices for public comment.

List of Subjects in Part 135

Government employees; Federal retirees; Health care.

■ Accordingly, for the reasons stated in the preamble, the Department of State adds part 135 to Subchapter N of Title 22, Code of Federal Regulations, to read as follows:

PART 135—IMPLEMENTATION OF THE HAVANA ACT OF 2021

Sec.
135.1 Authority.
135.2 Definitions.
135.3 Eligibility for payments by the Department of State.
135.4 Consultation with other agencies.

Authority: 22 U.S.C. 2651a; 22 U.S.C. 2680b.

§ 135.1 Authority.

(a) Under section 3 of the HAVANA Act of 2021 (Pub. L. 117–46), codified in 22 U.S.C. 2680b(i), the Secretary of State or other agency heads may provide a payment for a qualifying injury to the brain to a covered employee or covered dependent, who incurred a qualifying injury to the brain on or after January 1, 2016. The authority to provide such payments is at the sole discretion of the Secretary or their designee.

(b) These regulations are issued in accordance with 22 U.S.C. 2680b(i)(4) and also apply to former covered employees of the Department of State and their covered dependents.

(c) For current employees of the Department of State (hereinafter, ''the Department''), applicable procedures are located in the Foreign Affairs Manual (3 FAM 3660 and its subchapters).

§ 135.2 Definitions.

For purposes of this part, the following definitions apply:

Covered employee. (1) An employee of the Department who, on or after January 1, 2016, becomes injured by reason of a qualifying injury to the brain.

(2) The following are considered employees of the Department (see procedures in 3 FAM 3660 and its subchapters) for the purposes of this rule: Department of State Foreign Service Officers; Department of State Foreign Service Specialists; Department of State Civil Service employees; Consular Affairs—Appointment Eligible Family Member Adjudicator positions; Expanded Professional Associates Program members; Family Member Appointments; Foreign Service Family Reserve Corps; employees on Limited Non-Career Appointments; Temporary Appointments; personnel on a Personal Services Contract; and Locally Employed Staff, whether employed on a Personal Services Agreement, Personal Services Contract, or appointed to the position.

(3) The following are not considered employees of the Department for purposes of these regulations (see § 135.4): employees or retired employees of other agencies.

Covered dependent: A family member of a Department current or former employee who, on or after January 1, 2016, becomes injured by reason of a qualifying injury to the brain while the dependent's sponsor was a covered employee of the Department.

Covered individual: A former employee of the Department who, on or after January 1, 2016, becomes injured by reason of a qualifying injury to the brain while they were a covered employee of the Department.

Family member: For purposes of determining ''covered dependent'', a family member is defined as follows:

(1) Children who are unmarried and under 21 years of age or, regardless of age, are unmarried and due to mental and/or physical limitations are incapable of self-support. The term ''children'' must include natural offspring, step-children, adopted children, and those under permanent legal guardianship (at least until age 18), or comparable permanent custody arrangement, of the employee or spouse or domestic partner (as defined in 3 FAM 1610) when dependent upon and normally residing with the guardian or custodial party, and U.S. citizen children placed for adoption if a U.S. court grants temporary guardianship of the child to the employee and specifically authorizes the child to reside with the employee in the country of assignment before the adoption is finalized;

(2) Parents (including stepparents and legally adoptive parents) of the employee or of the spouse or of the domestic partner as defined in 3 FAM 1610.

(3) Sisters and brothers (including stepsisters or stepbrothers, or adoptive sisters or brothers) of the employee, or of the spouse when such sisters and brothers are at least 51 percent dependent on the employee for support, unmarried and under 21 years of age, or regardless of age, are physically and/or mentally incapable of self-support; and

(4) Spouse.

Qualifying injury to the brain. (1) The injury must have occurred in connection with war, insurgency, hostile act, terrorist activity, or other incidents designated by the Secretary of State, and that was not the result of the willful misconduct of the covered individual; and

(2) The individual must have:

(i) An acute injury to the brain such as, but not limited to, a concussion, penetrating injury, or as the consequence of an event that leads to permanent alterations in brain function as demonstrated by confirming correlative findings on imaging studies (to include computed tomography scan (CT), or magnetic resonance imaging scan (MRI)), or electroencephalogram (EEG);

(ii) A medical diagnosis of a traumatic brain injury (TBI) that required active medical treatment for 12 months or more; or

(iii) Acute onset of new persistent, disabling neurologic symptoms as demonstrated by confirming correlative findings on imaging studies (to include CT, MRI), EEG, physical exam, or other appropriate testing, and that required active medical treatment for 12 months or more.

Other incident: A new onset of physical manifestations that cannot otherwise be readily explained.

§ 135.3 Eligibility for payments by the Department of State.

(a) The Department of State may provide a payment to covered individuals, as defined herein, if the qualifying injury to the brain was assessed and diagnosed in person by a currently board-certified neurologist from the American Board of Psychiatry and Neurology (ABPN), occurred on or after January 1, 2016, and while the individual was a covered employee of the Department.

(b) The Department of State may provide a payment to covered employees, as defined herein, if the qualifying injury to the brain was assessed and diagnosed in person by a currently board-certified neurologist from the American Board of Psychiatry and Neurology (ABPN), occurred on or after January 1, 2016, and while the employee was a covered employee of the Department.

(c) The Department of State may provide a payment to a covered dependent, if the qualifying injury to the brain was assessed and diagnosed in person by a currently board-certified neurologist from the American Board of Psychiatry and Neurology (ABPN), occurred on or after January 1, 2016, and the dependent's sponsor was a covered employee of the Department at the time of the dependent's injury.

(d) Payment for a qualifying injury to the brain will be a non-taxable, one-time lump sum payment.

(e) The Department will determine the amount paid to each eligible person based on the following factors:

(1) The responses on the DS–4316, ''Eligibility Questionnaire for HAVANA Act Payments''; and

(2) Whether the Department of Labor (Workers' Compensation) has determined that the requestor has no reemployment potential, or the Social Security Administration has approved the requestor for Social Security Disability Insurance, or the requestor's ABPN-certified neurologist has certified that the individual requires a full-time caregiver for activities of daily living, as defined by the Katz Index of Independence of Daily Living.

(3) The award thresholds are based on Level III of the Senior Executive Schedule: Base will be 75 percent of Level III pay, and Base+ will be 100 percent of Level III pay. If the requestor meets any of the criteria listed in paragraph (e)(2) of this section, the requestor will be eligible to receive a Base+ payment. Requestors whose neurologists confirm that the definition of ''qualifying injury to the brain'' has been met but have not met any of the criteria listed paragraph (e)(2) of this section, will be eligible to receive a Base payment. If a requestor who received a Base payment later s meets any of the criteria listed in paragraph (e)(2) of this section, the requestor may apply for an additional payment that will be the difference between the Base and Base+ payment.

(f) The Under Secretary of State for Management may approve payments under the rule. The Bureau of Global Talent Management (GTM) will notify individuals of the decision in writing.

(g) An appeal of a decision made by the Under Secretary of State for Management may be directed to the Deputy Secretary of State for Management and Resources in writing. The Deputy Secretary of State for Management and Resources is the final appeal authority. GTM will notify individuals of the decision in writing.

§ 135.4 Consultation with other agencies.

(a) The Department of State will, to the extent possible, consult with the appropriate officials in other federal agencies to identify their current and former covered employees, and current and former dependents who reported an anomalous health incident while working under Chief of Mission authority. This consultation is solely to assist the other agencies in determining who might be initially eligible for payment under the HAVANA Act. The Department of State will not process payment for employees, former employees, or dependents of current or former employees of other agencies.

(b) Under the HAVANA Act, the heads of other employing federal agencies are responsible for prescribing regulations to carry out the HAVANA Act, including regulations for approving any payment.

Kevin E. Bryant,

Deputy Director, Office of Directives Management, U.S. Department of State.

[FR Doc. 2022–13887 Filed 6–29–22; 8:45 am]

BILLING CODE 4710–10–P

DEPARTMENT OF LABOR

Occupational Safety and Health Administration

29 CFR Part 1926

Safety and Health Regulations for Construction—Lead

AGENCY: Occupational Safety and Health Administration (OSHA), Labor.

ACTION: Correcting amendment.

SUMMARY: OSHA is issuing a correcting amendment to the OSHA lead standard for construction to correct the inadvertent removal of regulatory text resulting from a notice of correcting amendments issued February 18, 2020.

DATES: Effective June 30, 2022.

FOR FURTHER INFORMATION CONTACT:

Press inquiries: Frank Meilinger, Director, OSHA Office of Communications; telephone: (202) 693–1999; email: *meilinger.francis2@dol.gov.*

General and technical information: Tiffany DeFoe, Director, Office of Chemical Hazards-Metals, OSHA Directorate of Standards and Guidance; telephone: (202) 693–1950; email: *defoe.tiffany@dol.gov.*

SUPPLEMENTARY INFORMATION:

I. Summary and Explanation

Safety and Health Regulations for Construction—Lead (§ 1926.62)

OSHA is correcting 29 CFR 1926.62 to restore regulatory text that was inadvertently removed from the OSHA lead standard for construction by amendments published on February 18, 2020 (85 FR 8726, 8735). This action is to reinstate the omitted regulatory text and restore the OSHA lead standard for construction to its correct version. The agency is issuing this notice to restore

regulatory text at paragraph § 1926.62 (d)(2)(iv).

On February 18, 2020, OSHA corrected typographical errors, including extraneous or omitted materials and inaccurate graphics, in 27 OSHA standards and regulations. In one of these corrections under Subpart D—Occupational Health and Environmental Controls, Lead, OSHA amended paragraphs 1926.62(d)(2)(iii) and (iv) by replacing the outdated references to ''Table 1 of this section'' with the correct references to ''paragraph (f) of this section,'' as Table 1 no longer existed (see 85 FR at 8728).

These corrections resulted in the inadvertent removal of the list of tasks at the end of paragraph (d)(2)(iv). OSHA is correcting 29 CFR 1926.62 to restore this list.

II. Exemption From Notice and Comment Procedures

OSHA has determined this correction is not subject to the procedures for public notice and comment specified in Section 4 of the Administrative Procedure Act (5 U.S.C. 553), and Section 6(b) of the Occupational Safety and Health Act of 1970 (29 U.S.C. 655(b)). This rulemaking only reinstates the inadvertent removal of four lines of regulatory text. The text that was removed was originally promulgated as part of an interim final rule mandated by Title X of the Housing and Community Development Act of 1992 (Pub. L. 102–550) and was included in § 1926.62(d)(2)(iv) for more than 25 years until its inadvertent deletion. No stakeholder is likely to object to this correction. Therefore, the agency finds good cause, in accordance with 29 CFR 1911.5 and 5 U.S.C. 553(b)(3)(B), that public notice and comment are unnecessary under 5 U.S.C. 553(b) and 29 U.S.C. 655(b).

III. State Plans

When federal OSHA promulgates a new standard or more stringent amendment to an existing standard, the states and U.S. Territories with their own OSHA-approved occupational safety and health plans (State Plans) must promulgate a state standard adopting such new federal standard or more stringent amendment to an existing federal standard, or an at least as effective equivalent thereof, within six months of promulgation of the new federal standard or amendment. The state may demonstrate that a standard change is not necessary if the state standard is already the same or at least as effective as the federal standard change.

Of the 28 states and territories with OSHA-approved State Plans, 22 cover public and private-sector employees: Alaska, Arizona, California, Hawaii, Indiana, Iowa, Kentucky, Maryland, Michigan, Minnesota, Nevada, New Mexico, North Carolina, Oregon, Puerto Rico, South Carolina, Tennessee, Utah, Vermont, Virginia, Washington, and Wyoming. The remaining six states and territories cover only state and local government employees: Connecticut, Illinois, Maine, New Jersey, New York, and the Virgin Islands.

OSHA concludes this correcting amendment restores inadvertently removed regulatory text which contains protections afforded employees under this standard for more than 25 years. Therefore, OSHA has determined that, within six months of the rule's promulgation date, State Plans must review their state standards and adopt this correction, unless the State Plans demonstrate that such amendment is not necessary, either because their existing standards continue to include the language that was inadvertently removed from the federal standard or because they have adopted different standards that are at least as effective as the reinstated federal provisions.

Authority and Signature

James Frederick, Deputy Assistant Secretary of Labor for Occupational Safety and Health, U.S. Department of Labor, 200 Constitution Avenue NW, Washington, DC 20210, authorized the preparation of this notice pursuant to Sections 4, 6, and 8 of the Occupational Safety and Health Act of 1970 (29 U.S.C. 653, 655, and 657); Secretary of Labor's Order 8–2020 (85 FR 58393 (Sept. 18, 2020)); 29 CFR part 1911; and 5 U.S.C. 553.

James Frederick,

Deputy Assistant Secretary of Labor for Occupational Safety and Health.

Accordingly, OSHA is correcting 29 CFR part 1926 with the following amendment:

PART 1926—OCCUPATIONAL SAFETY AND HEALTH REGULATIONS FOR CONSTRUCTION

■ 1. The authority citation for subpart D is revised to read as follows:

Authority: 40 U.S.C. 3704; 29 U.S.C. 653, 655, and 657; and Secretary of Labor's Order No. 12–71 (36 FR 8754), 8–76 (41 FR 25059), 9–83 (48 FR 35736), 1–90 (55 FR 9033), 6–96 (62 FR 111), 3–2000 (65 FR 50017), 5–2002 (67 FR 65008), 5–2007 (72 FR 31159), 4–2010 (75 FR 55355), 1–2012 (77 FR 3912), or 8–2020 (85 FR 58393), as applicable; and 29 CFR part 1911.

Sections 1926.59, 1926.60, and 1926.65 also issued under 5 U.S.C. 553 and 29 CFR part 1911.

Section 1926.61 also issued under 49 U.S.C. 1801–1819 and 5 U.S.C. 553.

Section 1926.62 also issued under sec. 1031, Public Law 102–550, 106 Stat. 3672 (42 U.S.C. 4853).

Section 1926.65 also issued under sec. 126, Public Law 99–499, 100 Stat. 1614 (reprinted at 29 U.S.C.A. 655 Note) and 5 U.S.C. 553.

■ 2. Amend § 1926.62 by revising paragraph (d)(2)(iv) to read as follows:

§ 1926.62 Lead.

* * * * *

(d) * * *

(2) * * *

(iv) With respect to the tasks listed in this paragraph (d)(2)(iv), where lead is present, until the employer performs an employee exposure assessment as required in this paragraph (d) and documents that the employee performing any of the listed tasks is not exposed to lead in excess of 2,500 μg/m³ (50×PEL), the employer shall treat the employee as if the employee were exposed to lead in excess of 2,500 μg/m³ and shall implement employee protective measures as prescribed in paragraph (d)(2)(v) of this section. Where the employer does establish that the employee is exposed to levels of lead below 2,500 μg/m³, the employer may provide the exposed employee with the appropriate respirator prescribed for use at such lower exposures, in accordance with paragraph (f) of this section. Interim protection as described in this paragraph is required where lead containing coatings or paint are present on structures when performing:

(A) Abrasive blasting,

(B) Welding,

(C) Cutting, and

(D) Torch burning.

* * * * *

[FR Doc. 2022–13907 Filed 6–29–22; 8:45 am]

BILLING CODE 4510–26–P

DEPARTMENT OF HOMELAND SECURITY

Coast Guard

33 CFR Part 165

[Docket No. USCG–2022–0542]

Safety Zones; Delaware River; DRWC Fireworks; Penn's Landing

AGENCY: Coast Guard, DHS.

ACTION: Notice of enforcement of regulation.

SUMMARY: The Coast Guard will enforce the Penn's Landing, Delaware River,

Philadelphia, PA, Safety Zone from 9 p.m. through 10 p.m. on July 2, 2022, to provide for the safety of life on navigable waterways during this firework event. Our regulation for marine events within the Fifth Coast Guard District identifies the regulated area for this event in Philadelphia, PA. During the enforcement period, the operator of any vessel in the regulated area must comply with directions from the Patrol Commander or any Official Patrol displaying a Coast Guard ensign.

DATES: The regulation in 33 CFR 165.506 will be enforced for the location identified as entry 10 in table 1 to paragraph (h)(1) from 9 p.m. through 10 p.m. on July 2, 2022.

FOR FURTHER INFORMATION CONTACT: If you have questions about this notice of enforcement, you may call or email Petty Officer Thomas Welker, U.S. Coast Guard, Sector Delaware Bay, Waterways Management Division, telephone 215–271–4814, email *Thomas.j.welker@uscg.mil.*

SUPPLEMENTARY INFORMATION: The Coast Guard will enforce the safety zone in table 1 to paragraph (h)(1) to 33 CFR 165.506, entry 10 for the DRWC Fireworks Display from 9 p.m. until 10 p.m. on July 2, 2022. This action is necessary to ensure safety of life on the navigable waters of the United States immediately prior to, during, and immediately after the fireworks displays. Our regulation for safety zones of fireworks displays within the Fifth Coast Guard District, table 1 to paragraph (h)(1) to 33 CFR 165.506, entry 10 specifies the location of the regulated area as all waters of Delaware River, adjacent to Penn's Landing, Philadelphia, PA, within a 500-yard radius of the launch site at approximate position latitude 39°56′52″ N, longitude 075°08′9″ W. During the enforcement period, as reflected in § 165.506(d), vessels may not enter, remain in, or transit through the safety zone unless authorized by the Captain of the Port or designated Coast Guard patrol personnel on-scene.

In addition to this notice of enforcement in the **Federal Register**, the Coast Guard will provide notification of this enforcement period via broadcast notice to mariners.

Dated: June 27, 2022.

Jonathan D. Theel,

Captain, U.S. Coast Guard Captain of the Port Delaware Bay.

[FR Doc. 2022–14046 Filed 6–29–22; 8:45 am]

BILLING CODE 9110–04–P

DEPARTMENT OF HOMELAND SECURITY

Coast Guard

33 CFR Part 165

[Docket No. USCG–2022–0541]

Safety Zones; Fireworks Displays in the Fifth Coast Guard District

AGENCY: Coast Guard, DHS.

ACTION: Notice of enforcement of regulation.

SUMMARY: The Coast Guard will enforce the Delaware River, Philadelphia, PA; Safety Zone from 8:45 p.m. through 10 p.m. on July 3, 2022, to provide for the safety of life on navigable waterways during the Rivers Casino fireworks event. Our regulation for marine events within the Fifth Coast Guard District identifies the regulated area for this event in Philadelphia, PA. During the enforcement period, the operator of any vessel in the regulated area must comply with directions from the Patrol Commander or any Official Patrol displaying a Coast Guard ensign.

DATES: The regulation 33 CFR 165.506 will be enforced for the location identified in entry 10 of table 1 to paragraph (h)(1) from 8:45 p.m. through 10 p.m. on July 3, 2022.

FOR FURTHER INFORMATION CONTACT: If you have questions about this notice of enforcement, you may call or email Petty Officer Jennifer Padilla, U.S. Coast Guard, Sector Delaware Bay, Waterways Management Division, telephone 215–271–4814, email *Jennifer.l.Padilla@uscg.mil.*

SUPPLEMENTARY INFORMATION: The Coast Guard will enforce the safety zone in table 1 to paragraph (h)(1) to 33 CFR 165.506, entry (a)10 for the Rivers Casino Fireworks display 8:45 p.m. through 10 p.m. on July 3, 2022. This action is necessary to ensure safety of life on the navigable waters of the United States immediately prior to, during, and immediately after the fireworks displays. Our regulation for safety zones of fireworks displays within the Fifth Coast Guard District, table 1 to paragraph (h)(1) to 33 CFR 165.506, entry 10 specifies the location of the regulated area as all waters of Delaware River, adjacent to Penn's Landing, Philadelphia, PA, within a 500-yard radius of the fireworks barge position. The approximate position for the display is latitude 39°57′39″ N, longitude 075°07′45″ W. During the enforcement period, as reflected in § 165.506(d), vessels may not enter, remain in, or transit through the safety zone unless authorized by the Captain of the Port or designated Coast Guard patrol personnel on-scene.

In addition to this notice of enforcement in the **Federal Register**, the Coast Guard will provide notification of this enforcement period via broadcast notice to mariners.

Dated: June 27, 2022.

Jonathan D. Theel,

Captain, U.S. Coast Guard Captain of the Port Delaware Bay.

[FR Doc. 2022–14042 Filed 6–29–22; 8:45 am]

BILLING CODE 9110–04–P

DEPARTMENT OF HOMELAND SECURITY

Coast Guard

33 CFR Part 165

[Docket Number USCG–2022–0535]

RIN 1625–AA00

Safety Zone; Waterway, Tonawanda, NY

AGENCY: Coast Guard, DHS.

ACTION: Temporary final rule.

SUMMARY: The Coast Guard is establishing a temporary safety zone for navigable waters within a 280-foot radius of bridge launched fireworks over Ellicott River in Tonawanda, NY. The safety zone is necessary to protect personnel, vessels, and the marine environment from potential hazards created by a fireworks display. Entry of vessels or persons into this safety zone is prohibited unless specifically authorized by the Captain of the Port Buffalo or his designated representative.

DATES: This rule is effective from 9:45 p.m. through 10:30 p.m. on July 4, 2022.

ADDRESSES: To view documents mentioned in this preamble as being available in the docket, go to *https://www.regulations.gov,* type USCG–2022–0535 in the ''SEARCH'' box and click ''SEARCH.'' Next, in the Document Type column, select ''Supporting & Related Material.''

FOR FURTHER INFORMATION CONTACT: If you have questions on this rule, call or email MST1 Anthony Urbana, Sector Buffalo, U.S. Coast Guard; telephone 716–843–9342, email *D09-SMB-SECBuffalo-WWM@uscg.mil.*

SUPPLEMENTARY INFORMATION:

I. Table of Abbreviations

CFR Code of Federal Regulations
DHS Department of Homeland Security
FR Federal Register
NPRM Notice of proposed rulemaking
§ Section

U.S.C. United States Code

II. Background Information and Regulatory History

The Coast Guard is issuing this temporary rule without prior notice and opportunity to comment pursuant to authority under section 4(a) of the Administrative Procedure Act (APA) (5 U.S.C. 553(b)). This provision authorizes an agency to issue a rule without prior notice and opportunity to comment when the agency for good cause finds that those procedures are ''impracticable, unnecessary, or contrary to the public interest.'' Under 5 U.S.C. 553(b)(B), the Coast Guard finds that good cause exists for not publishing a notice of proposed rulemaking (NPRM) with respect to this rule because doing so would be impracticable. The event sponsor did not submit notice of the fireworks display to the Coast Guard with sufficient time remaining before the event to publish an NPRM. This safety zone must be established by July 04, 2022 in order to protect spectators and vessels from the hazards associated with this fireworks display.

Under 5 U.S.C. 553(d)(3), the Coast Guard finds that good cause exists for making this rule effective less than 30 days after publication in the **Federal Register**. For the same reasons discussed in the preceding paragraph, waiting for a 30-day notice period to run would be impracticable because we must establish this safety zone by July 04, 2022.

III. Legal Authority and Need for Rule

The Coast Guard is issuing this rule under authority in 46 U.S.C. 70034 (previously 33 U.S.C. 1231). The Captain of the Port Buffalo (COTP) has determined that fireworks over the water presents significant risks to public safety and property within a 280-foot radius of the launch point. This rule is necessary to protect personnel, vessels, and the marine environment in the navigable waters within the safety zone while the fireworks display is taking place.

IV. Discussion of the Rule

This rule establishes a safety zone from 9:45 p.m. through 10:30 p.m. on July 4, 2022. The safety zone will cover all navigable waters within a 280-foot radius of bridge launched fireworks over Ellicott River in Tonawanda, NY. The duration of the safety zone is intended to protect spectators, vessels, and the marine environment in these navigable waters during the fireworks display. No vessel or person will be permitted to enter the safety zone without obtaining permission from the COTP Buffalo or his designated representative.

V. Regulatory Analyses

We developed this rule after considering numerous statutes and Executive orders related to rulemaking. Below we summarize our analyses based on a number of these statutes and Executive orders, and we discuss First Amendment rights of protestors.

A. Regulatory Planning and Review

Executive Orders 12866 and 13563 direct agencies to assess the costs and benefits of available regulatory alternatives and, if regulation is necessary, to select regulatory approaches that maximize net benefits. This rule has not been designated a ''significant regulatory action,'' under Executive Order 12866. Accordingly, this rule has not been reviewed by the Office of Management and Budget (OMB).

This regulatory action determination is based on the size, location, duration, and time-of-day of the safety zone. The safety zone will encompass a 280-foot radius from the bridge launched fireworks over Ellicott River in Tonwanda, NY, with the event lasting approximately 1 hour during the evening when vessel traffic is normally low. Moreover, the Coast Guard would issue a Broadcast Notice to Mariners via VHF–FM marine channel 16 about the safety zone, and the rule would allow vessels to seek permission to enter the safety zone.

B. Impact on Small Entities

The Regulatory Flexibility Act of 1980, 5 U.S.C. 601–612, as amended, requires Federal agencies to consider the potential impact of regulations on small entities during rulemaking. The term ''small entities'' comprises small businesses, not-for-profit organizations that are independently owned and operated and are not dominant in their fields, and governmental jurisdictions with populations of less than 50,000. The Coast Guard certifies under 5 U.S.C. 605(b) that this rule will not have a significant economic impact on a substantial number of small entities.

While some owners or operators of vessels intending to transit the safety zone may be small entities, for the reasons stated in section V.A above, this rule will not have a significant economic impact on any vessel owner or operator.

Under section 213(a) of the Small Business Regulatory Enforcement Fairness Act of 1996 (Pub. L. 104–121), we want to assist small entities in understanding this rule. If the rule would affect your small business, organization, or governmental jurisdiction and you have questions concerning its provisions or options for compliance, please call or email the person listed in the **FOR FURTHER INFORMATION CONTACT** section.

Small businesses may send comments on the actions of Federal employees who enforce, or otherwise determine compliance with, Federal regulations to the Small Business and Agriculture Regulatory Enforcement Ombudsman and the Regional Small Business Regulatory Fairness Boards. The Ombudsman evaluates these actions annually and rates each agency's responsiveness to small business. If you wish to comment on actions by employees of the Coast Guard, call 1–888–REG–FAIR (1–888–734–3247). The Coast Guard will not retaliate against small entities that question or complain about this rule or any policy or action of the Coast Guard.

C. Collection of Information

This rule will not call for a new collection of information under the Paperwork Reduction Act of 1995 (44 U.S.C. 3501–3520).

D. Federalism and Indian Tribal Governments

A rule has implications for federalism under Executive Order 13132, Federalism, if it has a substantial direct effect on the States, on the relationship between the National Government and the States, or on the distribution of power and responsibilities among the various levels of government. We have analyzed this rule under that Order and have determined that it is consistent with the fundamental federalism principles and preemption requirements described in Executive Order 13132.

Also, this rule does not have tribal implications under Executive Order 13175, Consultation and Coordination with Indian Tribal Governments, because it does not have a substantial direct effect on one or more Indian tribes, on the relationship between the Federal Government and Indian tribes, or on the distribution of power and responsibilities between the Federal Government and Indian tribes.

E. Unfunded Mandates Reform Act

The Unfunded Mandates Reform Act of 1995 (2 U.S.C. 1531–1538) requires Federal agencies to assess the effects of their discretionary regulatory actions. In particular, the Act addresses actions that may result in the expenditure by a State, local, or tribal government, in the aggregate, or by the private sector of $100,000,000 (adjusted for inflation) or

more in any one year. Though this rule will not result in such an expenditure, we do discuss the effects of this rule elsewhere in this preamble.

F. Environment

We have analyzed this rule under Department of Homeland Security Directive 023–01, Rev. 1, associated implementing instructions, and Environmental Planning COMDTINST 5090.1 (series), which guide the Coast Guard in complying with the National Environmental Policy Act of 1969 (42 U.S.C. 4321–4370f), and have determined that this action is one of a category of actions that do not individually or cumulatively have a significant effect on the human environment. This rule a safety zone lasting approximately 1 hour that will prohibit entry within a 280-foot radius over Ellicott River in Tonawanda, NY for a fireworks display. It is categorically excluded from further review under paragraph L60(a) of Appendix A, Table 1 of DHS Instruction Manual 023–01–001–01, Rev. 1. A Record of Environmental Consideration supporting this determination is available in the docket. For instructions on locating the docket, see the **ADDRESSES** section of this preamble.

G. Protest Activities

The Coast Guard respects the First Amendment rights of protesters. Protesters are asked to call or email the person listed in the **FOR FURTHER INFORMATION CONTACT** section to coordinate protest activities so that your message can be received without jeopardizing the safety or security of people, places, or vessels.

List of Subjects in 33 CFR Part 165

Harbors, Marine safety, Navigation (water), Reporting and recordkeeping requirements, Security measures, Waterways.

For the reasons discussed in the preamble, the Coast Guard amends 33 CFR part 165 as follows:

PART 165—REGULATED NAVIGATION AREAS AND LIMITED ACCESS AREAS

■ 1. The authority citation for part 165 continues to read as follows:

Authority: 46 U.S.C. 70034, 70051; 33 CFR 1.05, 6.04–6, and 160.5; Department of Homeland Security Delegation No. 0170.1, Revision No. 01.2.

■ 2. Add § 165.T09–0535 to read as follows:

§ 165.T09–0535 Safety Zone; Ellicott River, Tonawanda, NY.

(a) *Location.* The following area is a safety zone: All waters of the Ellicott River, from surface to bottom, encompassed by a 280-foot radius around 43°01′18.1″ N, 78°52′40.9″ W.

(b) *Definitions.* As used in this section, *designated representative* means a Coast Guard Patrol Commander, including a Coast Guard coxswain, petty officer, or other officer operating a Coast Guard vessel and a Federal, State, and local officer designated by or assisting the Captain of the Port Buffalo (COTP) in the enforcement of the safety zone.

(c) *Regulations.* (1) In accordance with the general regulations in section § 165.23, entry into, transiting, or anchoring within the safety zone described in paragraph (a) of this section is prohibited unless authorized by the COTP Buffalo or a designated representative.

(2) Vessel operators desiring to enter or operate within the safety zone must contact the COTP Buffalo or his designated representative to obtain permission to do so. The COTP Buffalo or his designated representative may be contacted via VHF Channel 16. Vessel operators given permission to enter or operate in the safety zone must comply with all directions given to them by the COTP Buffalo or his designated representative.

(d) *Enforcement period.* The regulated area described in paragraph (a) is effective from 9:45 p.m. through 10:30 p.m. on July 04, 2022.

Dated: June 23, 2022.

M.I. Kuperman,

Captain, U.S. Coast Guard, Captain of the Port Buffalo.

[FR Doc. 2022–14005 Filed 6–29–22; 8:45 am]

BILLING CODE 9110–04–P

DEPARTMENT OF HOMELAND SECURITY

Coast Guard

33 CFR Part 165

[Docket Number USCG–2022–0443]

RIN 1625–AA00

Safety Zone; SamSen Operation Fireworks, Seneca Lake, Romulus, NY

AGENCY: Coast Guard, DHS.

ACTION: Temporary final rule.

SUMMARY: The Coast Guard is establishing a temporary safety zone for navigable waters within a 840-foot radius of barge launched fireworks over Seneca Lake in Romulus, NY. The safety zone is necessary to protect personnel, vessels, and the marine environment from potential hazards created by a fireworks display. Entry of vessels or persons into this zone is prohibited unless specifically authorized by the Captain of the Port Buffalo or a designated representative.

DATES: This rule is effective from 9:15 p.m. through 10:45 p.m. on July 3, 2022.

ADDRESSES: To view documents mentioned in this preamble as being available in the docket, go to *https://www.regulations.gov,* type USCG–2022–0443 in the ''SEARCH'' box and click ''SEARCH.'' Next, in the Document Type column, select ''Supporting & Related Material.''

FOR FURTHER INFORMATION CONTACT: If you have questions on this rule, call or email MST1 Anthony Urbana, Sector Buffalo, U.S. Coast Guard; telephone 716–843–9342, email *D09-SMB-SECBuffalo-WWM@uscg.mil.*

SUPPLEMENTARY INFORMATION:

I. Table of Abbreviations

CFR Code of Federal Regulations
DHS Department of Homeland Security
FR Federal Register
NPRM Notice of proposed rulemaking
§ Section
U.S.C. United States Code

II. Background Information and Regulatory History

The Coast Guard is issuing this temporary rule without prior notice and opportunity to comment pursuant to authority under section 4(a) of the Administrative Procedure Act (APA) (5 U.S.C. 553(b)). This provision authorizes an agency to issue a rule without prior notice and opportunity to comment when the agency for good cause finds that those procedures are ''impracticable, unnecessary, or contrary to the public interest.'' Under 5 U.S.C. 553(b)(B), the Coast Guard finds that good cause exists for not publishing a notice of proposed rulemaking (NPRM) with respect to this rule because the event sponsor did not submit notice of the fireworks display to the Coast Guard with sufficient time remaining before the event to publish an NPRM and immediate action is necessary to protect spectators and vessels from the hazards associated with this foreworks display. It is impracticable to publish an NPRM because we must establish this safety zone by July 3, 2022.

Under 5 U.S.C. 553(d)(3), the Coast Guard finds that good cause exists for making this rule effective less than 30 days after publication in the **Federal Register**. For the same reasons discussed in the preceding paragraph,

waiting for a 30-day notice period to run would be impracticable because immediate action is necessary to protect personnel, vessels, and the marine environment during the fireworks display over Seneca Lake in Romulus, NY.

III. Legal Authority and Need for Rule

The Coast Guard is issuing this rule under authority in 46 U.S.C. 70034 (previously 33 U.S.C. 1231). The Captain of the Port Buffalo (COTP) has determined that fireworks over the water presents significant risks to public safety and property within a 840-foot radius of the launch point. This rule is necessary to protect personnel, vessels, and the marine environment in the navigable waters within the safety zone while the fireworks display is taking place.

IV. Discussion of the Rule

This rule establishes a safety zone from 9:15 p.m. through 10:45 p.m. on July 3, 2022. The safety zone will cover all navigable waters within a 840-foot radius of barge launched fireworks over Seneca Lake in Romulus, NY. The zone is intended to protect spectators, vessels, and the marine environment in these navigable waters during the fireworks display. No vessel or person will be permitted to enter the safety zone without obtaining permission from the COTP Buffalo or a designated representative.

V. Regulatory Analyses

We developed this rule after considering numerous statutes and Executive orders related to rulemaking. Below we summarize our analyses based on a number of these statutes and Executive orders, and we discuss First Amendment rights of protestors.

A. Regulatory Planning and Review

Executive Orders 12866 and 13563 direct agencies to assess the costs and benefits of available regulatory alternatives and, if regulation is necessary, to select regulatory approaches that maximize net benefits. This rule has not been designated a ''significant regulatory action,'' under Executive Order 12866. Accordingly, this rule has not been reviewed by the Office of Management and Budget (OMB).

This regulatory action determination is based on the characteristics of the safety zone. The safety zone will encompass a 840-foot radius from the barge-launched fireworks in the Seneca Lake in Romulus, NY, with the event lasting approxiamately 1.5 hours during the evening when vessel traffic is normally low. Moreover, the Coast Guard would issue a Broadcast Notice to Mariners via VHF–FM marine channel 16 about the zone, and the rule would allow vessels to seek permission to enter the zone.

B. Impact on Small Entities

The Regulatory Flexibility Act of 1980, 5 U.S.C. 601–612, as amended, requires Federal agencies to consider the potential impact of regulations on small entities during rulemaking. The term ''small entities'' comprises small businesses, not-for-profit organizations that are independently owned and operated and are not dominant in their fields, and governmental jurisdictions with populations of less than 50,000. The Coast Guard certifies under 5 U.S.C. 605(b) that this rule will not have a significant economic impact on a substantial number of small entities.

While some owners or operators of vessels intending to transit the safety zone may be small entities, for the reasons stated in section V.A above, this rule will not have a significant economic impact on any vessel owner or operator.

Under section 213(a) of the Small Business Regulatory Enforcement Fairness Act of 1996 (Pub. L. 104–121), we want to assist small entities in understanding this rule. If the rule would affect your small business, organization, or governmental jurisdiction and you have questions concerning its provisions or options for compliance, please call or email the person listed in the **FOR FURTHER INFORMATION CONTACT** section.

Small businesses may send comments on the actions of Federal employees who enforce, or otherwise determine compliance with, Federal regulations to the Small Business and Agriculture Regulatory Enforcement Ombudsman and the Regional Small Business Regulatory Fairness Boards. The Ombudsman evaluates these actions annually and rates each agency's responsiveness to small business. If you wish to comment on actions by employees of the Coast Guard, call 1–888–REG–FAIR (1–888–734–3247). The Coast Guard will not retaliate against small entities that question or complain about this rule or any policy or action of the Coast Guard.

C. Collection of Information

This rule will not call for a new collection of information under the Paperwork Reduction Act of 1995 (44 U.S.C. 3501–3520).

D. Federalism and Indian Tribal Governments

A rule has implications for federalism under Executive Order 13132, Federalism, if it has a substantial direct effect on the States, on the relationship between the National Government and the States, or on the distribution of power and responsibilities among the various levels of government. We have analyzed this rule under that Order and have determined that it is consistent with the fundamental federalism principles and preemption requirements described in Executive Order 13132.

Also, this rule does not have tribal implications under Executive Order 13175, Consultation and Coordination with Indian Tribal Governments, because it does not have a substantial direct effect on one or more Indian tribes, on the relationship between the Federal Government and Indian tribes, or on the distribution of power and responsibilities between the Federal Government and Indian tribes. If you believe this rule has implications for federalism or Indian tribes, please contact the person listed in the **FOR FURTHER INFORMATION CONTACT** section above.

E. Unfunded Mandates Reform Act

The Unfunded Mandates Reform Act of 1995 (2 U.S.C. 1531–1538) requires Federal agencies to assess the effects of their discretionary regulatory actions. In particular, the Act addresses actions that may result in the expenditure by a State, local, or tribal government, in the aggregate, or by the private sector of $100,000,000 (adjusted for inflation) or more in any one year. Though this rule will not result in such an expenditure, we do discuss the effects of this rule elsewhere in this preamble.

F. Environment

We have analyzed this rule under Department of Homeland Security Directive 023–01, Rev. 1, associated implementing instructions, and Environmental Planning COMDTINST 5090.1 (series), which guide the Coast Guard in complying with the National Environmental Policy Act of 1969 (42 U.S.C. 4321–4370f), and have determined that this action is one of a category of actions that do not individually or cumulatively have a significant effect on the human environment. This rule involves a safety zone lasting approximately 1.5 hours that will prohibit entry within a 840-foot radius in Seneca Lake in Romulus, NY for a fireworks display. It is categorically excluded from further review under paragraph L60(a) of

Appendix A, Table 1 of DHS Instruction Manual 023–01–001–01, Rev. 1. A Record of Environmental Consideration supporting this determination is available in the docket. For instructions on locating the docket, see the **ADDRESSES** section of this preamble.

G. Protest Activities

The Coast Guard respects the First Amendment rights of protesters. Protesters are asked to call or email the person listed in the **FOR FURTHER INFORMATION CONTACT** section to coordinate protest activities so that your message can be received without jeopardizing the safety or security of people, places or vessels.

List of Subjects in 33 CFR Part 165

Harbors, Marine safety, Navigation (water), Reporting and recordkeeping requirements, Security measures, Waterways.

For the reasons discussed in the preamble, the Coast Guard amends 33 CFR part 165 as follows:

PART 165—REGULATED NAVIGATION AREAS AND LIMITED ACCESS AREAS

■ 1. The authority citation for part 165 continues to read as follows:

Authority: Authority: 46 U.S.C. 70034, 70051; 33 CFR 1.05–1, 6.04–1, 6.04–6, and 160.5; Department of Homeland Security Delegation No. 00170.1, Revision No. 01.2.

■ 2. Add § 165.T09–0443 to read as follows:

§ 165.T09–0443 Safety Zone; SamSen Operation Fireworks; Seneca Lake, Romulus, NY

(a) *Location.* The following area is a safety zone: All waters of the Seneca Lake, from surface to bottom, encompassed by a 840-foot radius around 42°43′39.28″ N, 076°54′59.47″ W.

(b) *Definitions.* As used in this section, *designated representative* means a Coast Guard Patrol Commander, including a Coast Guard coxswain, petty officer, or other officer operating a Coast Guard vessel and a Federal, State, and local officer designated by or assisting the Captain of the Port Buffalo (COTP) in the enforcement of the safety zone.

(c) *Regulations.* (1) In accordance with the general regulations in section § 165.23, entry into, transiting, or anchoring within the safety zone described in paragraph (a) of this section is prohibited unless authorized by the COTP Buffalo or a designated representative.

(2) Vessel operators desiring to enter or operate within the safety zone described in paragraph (a) of this section must contact the COTP Buffalo or his designated representative to obtain permission to do so. The COTP Buffalo or his designated representative may be contacted via VHF Channel 16. Vessel operators given permission to enter or operate in the safety zone must comply with all directions given to them by the COTP Buffalo, or his designated representative.

(d) *Enforcement period.* The regulated area described in paragraph (a) is effective from 9:15 p.m. through 10:45 p.m. on July 3, 2022.

Dated: June 23, 2022.

M.I. Kuperman,

Captain, U.S. Coast Guard, Captain of the Port Buffalo.

[FR Doc. 2022–14006 Filed 6–29–22; 8:45 am]

BILLING CODE 9110–04–P

DEPARTMENT OF HOMELAND SECURITY

Coast Guard

33 CFR Part 165

[Docket Number USCG–2022–0138]

RIN 1625–AA00

Safety Zone; Savannah River 4th of July Fireworks Show, Savannah, GA

AGENCY: Coast Guard, DHS.

ACTION: Temporary final rule.

SUMMARY: The Coast Guard is establishing a temporary safety zone for navigable waters of the Savannah River around Savannah, GA for a July 4th Fireworks event. The safety zone is needed to protect personnel, vessels, and the marine environment from potential hazards created by fallout from the July 4th Fireworks display. Entry of vessels or persons into this zone is prohibited unless specifically authorized by the Captain of the Port (COTP) Savannah or a designated representative.

DATES: This rule is effective from 9 p.m. through 11 p.m., on July 4, 2022.

ADDRESSES: To view documents mentioned in this preamble as being available in the docket, go to *https://www.regulations.gov,* type USCG–2022–0138 in the search box and click ''Search.'' Next, in the Document Type column, select ''Supporting & Related Material.''

FOR FURTHER INFORMATION CONTACT: If you have questions on this rule, call or email LT Alex McConnell, of the Marine Safety Unit Savannah Office of Waterways Management, Coast Guard, at telephone 912–652–4353, extension 240, or via email at *MSUSavannah-WWM@uscg.mil.*

SUPPLEMENTARY INFORMATION:

I. Table of Abbreviations

CFR Code of Federal Regulations
DHS Department of Homeland Security
FR Federal Register
NPRM Notice of proposed rulemaking
§ Section
U.S.C. United States Code

II. Background Information and Regulatory History

The Coast Guard is issuing this temporary rule without prior notice and opportunity to comment pursuant to authority under section 4(a) of the Administrative Procedure Act (APA) (5 U.S.C. 553(b)). This provision authorizes an agency to issue a rule without prior notice and opportunity to comment when the agency for good cause finds that those procedures are ''impracticable, unnecessary, or contrary to the public interest.'' Under 5 U.S.C. 553(b)(B), the Coast Guard finds that good cause exists for not publishing a notice of proposed rulemaking (NPRM) with respect to this rule. Doing so would be impracticable and contrary to the public interest. Prompt action is needed to respond to the potential safety hazards associated with a fireworks display on the Savannah River, adjacent to a major shipping channel. The primary justification for this action is that the Coast Guard received initial notice of the event on June 1, 2022 regarding the event beginning on July 4, 2022, and was further delayed in processing this temporary rule due to technical problems related to conducting the environmental review. The event would begin before the rulemaking process would be completed. Therefore, the Coast Guard lacks sufficient time to provide a reasonable comment period and then consider those comments before issuing the rule. It would be impracticable and contrary to the public interest to delay promulgating this rule, as it is necessary to protect the safety of participants, spectators, and vessels transiting near the fireworks display.

Under 5 U.S.C. 553(d)(3), the Coast Guard finds that good cause exists for making this rule effective less than 30 days after publication in the **Federal Register**. Delaying the effective date of this rule would be impracticable because immediate action is needed to respond to the potential safety hazards associated with a fireworks display adjacent to a major shipping channel.

III. Legal Authority and Need for Rule

The Coast Guard is issuing this rule under authority in 46 U.S.C. 70034. The Captain of the Port Savannah (COTP) has determined that potential hazards associated with a fireworks display on the Savannah River, near downtown Savannah, starting July 4, 2022 from 9 p.m. to 11 p.m. will be a safety concern for anyone within the area. This rule is needed to protect personnel, vessels, and the marine environment in the navigable waters within the safety zone during the July 4th Fireworks display.

IV. Discussion of the Rule

This rule establishes a safety zone from 9 p.m. through 11 p.m. on July 4, 2022. The safety zone will cover all navigable waters in the Savannah River adjacent to downtown Savannah. The safety zone is needed to protect personnel, vessels, and the marine environment from potential hazards created by fallout from the July 4th Fireworks display. No vessel or person will be permitted to enter the safety zone without obtaining permission from the COTP or a designated representative. If authorization to enter, transit through, anchor in, or remain within the safety zone is granted by the COTP or a designated representative, all persons and vessels receiving such authorization must comply with the instructions of the COTP or a designated representative.

V. Regulatory Analyses

We developed this rule after considering numerous statutes and Executive orders related to rulemaking. Below we summarize our analyses based on a number of these statutes and Executive orders, and we discuss First Amendment rights of protestors.

A. Regulatory Planning and Review

Executive Orders 12866 and 13563 direct agencies to assess the costs and benefits of available regulatory alternatives and, if regulation is necessary, to select regulatory approaches that maximize net benefits. This rule has not been designated a ''significant regulatory action,'' under Executive Order 12866. Accordingly, this rule has not been reviewed by the Office of Management and Budget (OMB).

This regulatory action determination is based on the following reasons: (1) the safety zone only being enforced for a total of two hours; (2) although persons and vessels may not enter, transit through, anchor in, or remain within the zone without authorization from the COTP or a designated representative, they may operate in the surrounding area during the enforcement period; (3) persons and vessels may still enter, transit through, anchor in, or remain within the areas during the enforcement period if authorized by the COTP or a designated representative.

B. Impact on Small Entities

The Regulatory Flexibility Act of 1980, 5 U.S.C. 601–612, as amended, requires Federal agencies to consider the potential impact of regulations on small entities during rulemaking. The term ''small entities'' comprises small businesses, not-for-profit organizations that are independently owned and operated and are not dominant in their fields, and governmental jurisdictions with populations of less than 50,000. The Coast Guard certifies under 5 U.S.C. 605(b) that this rule will not have a significant economic impact on a substantial number of small entities.

While some owners or operators of vessels intending to transit the safety zone may be small entities, for the reasons stated in section V.A above, this rule will not have a significant economic impact on any vessel owner or operator.

Under section 213(a) of the Small Business Regulatory Enforcement Fairness Act of 1996 (Pub. L. 104–121), we want to assist small entities in understanding this rule. If the rule would affect your small business, organization, or governmental jurisdiction and you have questions concerning its provisions or options for compliance, please call or email the person listed in the **FOR FURTHER INFORMATION CONTACT** section.

Small businesses may send comments on the actions of Federal employees who enforce, or otherwise determine compliance with, Federal regulations to the Small Business and Agriculture Regulatory Enforcement Ombudsman and the Regional Small Business Regulatory Fairness Boards. The Ombudsman evaluates these actions annually and rates each agency's responsiveness to small business. If you wish to comment on actions by employees of the Coast Guard, call 1–888–REG–FAIR (1–888–734–3247). The Coast Guard will not retaliate against small entities that question or complain about this rule or any policy or action of the Coast Guard.

C. Collection of Information

This rule will not call for a new collection of information under the Paperwork Reduction Act of 1995 (44 U.S.C. 3501–3520).

D. Federalism and Indian Tribal Governments

A rule has implications for federalism under Executive Order 13132, Federalism, if it has a substantial direct effect on the States, on the relationship between the National Government and the States, or on the distribution of power and responsibilities among the various levels of government. We have analyzed this rule under that Order and have determined that it is consistent with the fundamental federalism principles and preemption requirements described in Executive Order 13132.

Also, this rule does not have tribal implications under Executive Order 13175, Consultation and Coordination with Indian Tribal Governments, because it does not have a substantial direct effect on one or more Indian tribes, on the relationship between the Federal Government and Indian tribes, or on the distribution of power and responsibilities between the Federal Government and Indian tribes.

E. Unfunded Mandates Reform Act

The Unfunded Mandates Reform Act of 1995 (2 U.S.C. 1531–1538) requires Federal agencies to assess the effects of their discretionary regulatory actions. In particular, the Act addresses actions that may result in the expenditure by a State, local, or tribal government, in the aggregate, or by the private sector of $100,000,000 (adjusted for inflation) or more in any one year. Though this rule will not result in such an expenditure, we do discuss the effects of this rule elsewhere in this preamble.

F. Environment

We have analyzed this rule under Department of Homeland Security Directive 023–01, Rev. 1, associated implementing instructions, and Environmental Planning COMDTINST 5090.1 (series), which guide the Coast Guard in complying with the National Environmental Policy Act of 1969 (42 U.S.C. 4321–4370f), and have determined that this action is one of a category of actions that do not individually or cumulatively have a significant effect on the human environment. This rule involves a safety zone lasting only two hours that will prohibit entry within certain navigable waters of the Savannah River. It is categorically excluded from further review under paragraph L60(a) of Appendix A, Table 1 of DHS Instruction Manual 023–01–001–01, Rev. 1. A Record of Environmental Consideration supporting this determination is available in the docket. For instructions

on locating the docket, see the **ADDRESSES** section of this preamble.

G. Protest Activities

The Coast Guard respects the First Amendment rights of protesters. Protesters are asked to call or email the person listed in the **FOR FURTHER INFORMATION CONTACT** section to coordinate protest activities so that your message can be received without jeopardizing the safety or security of people, places or vessels.

List of Subjects in 33 CFR Part 165

Harbors, Marine safety, Navigation (water), Reporting and recordkeeping requirements, Security measures, Waterways.

For the reasons discussed in the preamble, the Coast Guard amends 33 CFR part 165 as follows:

PART 165—REGULATED NAVIGATION AREAS AND LIMITED ACCESS AREAS

■ 1. The authority citation for part 165 continues to read as follows:

Authority: 46 U.S.C. 70034, 70051; 33 CFR 1.05–1, 6.04–1, 6.04–6, and 160.5; Department of Homeland Security Delegation No. 0170.1. Revision No. 01.2.

■ 2. Add § 165.T07–0138 to read as follows:

§ 165.T07–0138 Safety Zone; 4th of July Fireworks Show, Savannah River, Savannah, GA.

(a) *Location.* The following area is a safety zone: All waters of the Savannah River, from surface to bottom, bounded by a line drawn from a point located at 32°05′04″ N, 081°05′46″ W, thence to 32°05′10″ N, 081°05′39″ W, thence to 32°05′04″ N, 081°05′30″ W, thence to 32°04′57″ N, 081°05′34″ W.

(b) *Definitions.* As used in this section, *designated representative* means a Coast Guard Patrol Commander, including a Coast Guard coxswain, petty officer, or other officer operating a Coast Guard vessel and a Federal, State, and local officer designated by or assisting the Captain of the Port Savannah (COTP) in the enforcement of the safety zone.

(c) *Regulations.* (1) Under the general safety zone regulations in subpart C of this part, you may not enter the safety zone described in paragraph (a) of this section unless authorized by the COTP or the COTP's designated representative.

(2) Persons or vessels desiring to enter, transit through, anchor in, or remain within the safety zone may contact COTP Savannah by telephone at (912) 247–0073, or a designated representative via VHF radio on channel 16, to request authorization. If authorization to enter, transit through, anchor in, or remain within the regulated area is granted by the COTP Savannah or a designated representative, all persons and vessels receiving such authorization must comply with the instructions of the COTP or a designated representative.

(3) The Coast Guard will provide notice of the regulated areas by Broadcast Notice to Mariners, Marine Safety Information Bulletins, and on-scene designated representatives.

(d) *Enforcement period.* This section will be enforced from 9 p.m. until 11 p.m., on July 4, 2022.

Dated: June 27, 2022.

M.E. Keating,

Lieutanant Commander, U.S. Coast Guard, Acting Captain of the Port Savannah.

[FR Doc. 2022–14021 Filed 6–29–22; 8:45 am]

BILLING CODE 9110–04–P

DEPARTMENT OF HOMELAND SECURITY

Coast Guard

33 CFR Part 165

[Docket Number USCG–2022–0373]

RIN 1625–AA00

Safety Zone; Fireworks Display, Yaquina Bay, Newport, OR

AGENCY: Coast Guard, DHS.

ACTION: Temporary final rule.

SUMMARY: The Coast Guard is establishing a temporary safety zone for certain waters of the Yaquina Bay. This action is necessary to provide for the safety of participants and the maritime public during a fireworks display on the Yaquina Bay near Newport, Oregon on July 4th, 2022. This rulemaking prohibits non-participant persons and vessels from being in the safety zone unless authorized by the Captain of the Port Columbia River or a designated representative.

DATES: This rule is effective from 9:30 p.m. to 11 p.m. on July 4, 2022.

ADDRESSES: To view documents mentioned in this preamble as being available in the docket, go to *https://www.regulations.gov,* type USCG–2022–0373 in the search box and click ''Search.'' Next, in the Document Type column, select ''Supporting & Related Material.''

FOR FURTHER INFORMATION CONTACT: If you have questions on this rule, call or email LT Sean Murphy, Waterways Management Division, Marine Safety Unit Portland, U.S. Coast Guard; telephone 503–240–9319, email *D13-SMB-MSUPortlandWWM@uscg.mil.*

SUPPLEMENTARY INFORMATION:

I. Table of Abbreviations

CFR Code of Federal Regulations
COTP Captain of the Port Columbia River
DHS Department of Homeland Security
FR Federal Register
NPRM Notice of proposed rulemaking
§ Section
U.S.C. United States Code

II. Background Information and Regulatory History

On March 08, 2022, Western Display Fireworks, LTD notified the Coast Guard that it will be conducting a fireworks display from 10 to 10:30 p.m. on July 04, 2022. In response, on June 6, 2022, the Coast Guard published a notice of proposed rulemaking (NPRM) titled Safety Zone; Fireworks Display, Yaquina Bay, Newport, OR (87 FR 34605). There we stated why we issued the NPRM, and invited comments on our proposed regulatory action related to this fireworks display. During the comment period that ended June 22, 2022, we received no comments.

Under 5 U.S.C. 553(d)(3), the Coast Guard finds that good cause exists for making this rule effective less than 30 days after publication in the **Federal Register**. Delaying the effective date of this rule would be impracticable because immediate action is needed to respond to the potential safety hazards associated with the fireworks display.

III. Legal Authority and Need for Rule

The Coast Guard is issuing this rule under authority in 46 U.S.C. 70034 (previously 33 U.S.C. 1231). The Captain of the Port Columbia River (COTP) has determined that the potential hazards associated with the fireworks display would be a safety concern for anyone within the designated area of the safety zone before, during, or after the event. The purpose of this rulemaking is to protect personnel, vessels, and the marine environment in these navigable waters before, during, and after the scheduled event.

IV. Discussion of the Rule

As noted above, we received no comments on our NPRM published June 6, 2022. There are no changes in the regulatory text of this rule from the proposed rule in the NPRM.

The COTP is establishing a safety zone from 9:30 p.m. to 11 p.m. on July 04, 2022. The safety zone covers all navigable waters within 500 feet of the launch site located at approximately 44°37′31″ N, 124°2′5″ W in the port of

Newport, Oregon. The duration of the zone is intended to ensure the safety of vessels and these navigable waters before, during, and after the scheduled 10 to 10:30 p.m. fireworks display. No vessel or person is permitted to enter the safety zone without obtaining permission from the COTP or a designated representative.

V. Regulatory Analyses

We developed this rule after considering numerous statutes and Executive orders related to rulemaking. Below we summarize our analyses based on a number of these statutes and Executive orders, and we discuss First Amendment rights of protestors.

A. Regulatory Planning and Review

Executive Orders 12866 and 13563 direct agencies to assess the costs and benefits of available regulatory alternatives and, if regulation is necessary, to select regulatory approaches that maximize net benefits. This rule has not been designated a ''significant regulatory action,'' under Executive Order 12866. Accordingly, this rule has not been reviewed by the Office of Management and Budget (OMB).

This regulatory action determination is based on the size, location, duration, and time-of-year of the safety zone. The safety zone created by this rule is designed to minimize its impact on navigable waters. This rule prohibits entry into certain navigable waters of the Yaquina Bay and is not anticipated to exceed 2 hours in duration. Thus, restrictions on vessel movement within that particular area are expected to be minimal. Moreover, under certain conditions vessels may still transit through the safety zone when permitted by the COTP. The Coast Guard will issue a Broadcast Notice to Mariners via VHF–FM marine channel 16 about the zone and the rule allows vessels to seek permission to enter the zone.

B. Impact on Small Entities

The Regulatory Flexibility Act of 1980, 5 U.S.C. 601–612, as amended, requires Federal agencies to consider the potential impact of regulations on small entities during rulemaking. The term ''small entities'' comprises small businesses, not-for-profit organizations that are independently owned and operated and are not dominant in their fields, and governmental jurisdictions with populations of less than 50,000. The Coast Guard received no comments from the Small Business Administration on this rulemaking. The Coast Guard certifies under 5 U.S.C. 605(b) that this rule will not have a significant economic impact on a substantial number of small entities.

While some owners or operators of vessels intending to transit the safety zone may be small entities, for the reasons stated in section V.A above, this rule will not have a significant economic impact on any vessel owner or operator.

Under section 213(a) of the Small Business Regulatory Enforcement Fairness Act of 1996 (Pub. L. 104–121), we want to assist small entities in understanding this rule. If the rule will affect your small business, organization, or governmental jurisdiction and you have questions concerning its provisions or options for compliance, please call or email the person listed in the **FOR FURTHER INFORMATION CONTACT** section.

Small businesses may send comments on the actions of Federal employees who enforce, or otherwise determine compliance with, Federal regulations to the Small Business and Agriculture Regulatory Enforcement Ombudsman and the Regional Small Business Regulatory Fairness Boards. The Ombudsman evaluates these actions annually and rates each agency's responsiveness to small business. If you wish to comment on actions by employees of the Coast Guard, call 1–888–REG–FAIR (1–888–734–3247). The Coast Guard will not retaliate against small entities that question or complain about this rule or any policy or action of the Coast Guard.

C. Collection of Information

This rule will not call for a new collection of information under the Paperwork Reduction Act of 1995 (44 U.S.C. 3501–3520).

D. Federalism and Indian Tribal Governments

A rule has implications for federalism under Executive Order 13132, Federalism, if it has a substantial direct effect on the States, on the relationship between the National Government and the States, or on the distribution of power and responsibilities among the various levels of government. We have analyzed this rule under that Order and have determined that it is consistent with the fundamental federalism principles and preemption requirements described in Executive Order 13132.

Also, this rule does not have tribal implications under Executive Order 13175, Consultation and Coordination with Indian Tribal Governments, because it does not have a substantial direct effect on one or more Indian tribes, on the relationship between the Federal Government and Indian tribes, or on the distribution of power and responsibilities between the Federal Government and Indian tribes.

E. Unfunded Mandates Reform Act

The Unfunded Mandates Reform Act of 1995 (2 U.S.C. 1531–1538) requires Federal agencies to assess the effects of their discretionary regulatory actions. In particular, the Act addresses actions that may result in the expenditure by a State, local, or tribal government, in the aggregate, or by the private sector of $100,000,000 (adjusted for inflation) or more in any one year. Though this rule will not result in such an expenditure, we do discuss the effects of this rule elsewhere in this preamble.

F. Environment

We have analyzed this rule under Department of Homeland Security Directive 023–01, Rev. 1, associated implementing instructions, and Environmental Planning COMDTINST 5090.1 (series), which guide the Coast Guard in complying with the National Environmental Policy Act of 1969(42 U.S.C. 4321–4370f), and have determined that this action is one of a category of actions that do not individually or cumulatively have a significant effect on the human environment. This proposed rule involves a safety zone lasting 2 hours that will prohibit entry within 500 feet of a fireworks launch site. It is categorically excluded from further review under paragraph L60(a) of Appendix A, Table 1 of DHS Instruction Manual 023–01–001–01, Rev. 1. A Record of Environmental Consideration supporting this determination is available in the docket. For instructions on locating the docket, see the **ADDRESSES** section of this preamble.

G. Protest Activities

The Coast Guard respects the First Amendment rights of protesters. Protesters are asked to call or email the person listed in the **FOR FURTHER INFORMATION CONTACT** section to coordinate protest activities so that your message can be received without jeopardizing the safety or security of people, places or vessels.

List of Subjects in 33 CFR Part 165

Harbors, Marine safety, Navigation (water), Reporting and record keeping requirements, Security measures, Waterways.

For the reasons discussed in the preamble, the Coast Guard amends 33 CFR part 165 as follows:

PART 165—REGULATED NAVIGATION AREAS AND LIMITED ACCESS AREAS

■ 1. The authority citation for part 165 continues to read as follows:

Authority: 46 U.S.C. 70034, 70051; 33 CFR 1.05–1, 6.04–1, 6.04–6, and 160.5; Department of Homeland Security Delegation No. 00170.1, Revision No. 01.2.

■ 2. Add § 165.T13–0373 to read as follows:

§ 165.T13–0373 Safety Zone; Fireworks Display, Yaquina Bay, Newport, OR.

(a) *Location.* The following area is a safety zone: All navigable waters within 500 feet of a fireworks launch site in Newport, OR. The fireworks launch site will be at the approximate point of 44°37′31.62″ N/124°2′5.42″ W.

(b) *Definitions.* As used in this section—

Designated representative means a Coast Guard Patrol Commander, including a Coast Guard coxswain, petty officer, or other officer operating a Coast Guard vessel and a Federal, State, and local officer designated by or assisting the Captain of the Port Columbia River (COTP) in the enforcement of the safety zone.

Participant means all persons and vessels registered with the event sponsor as a participant in the fireworks display.

(c) *Regulations.* (1) Under the general safety zone regulations in subpart C of this part, all non-participants may not enter the safety zone described in paragraph (a) of this section unless authorized by the COTP or the COTP's designated representative.

(2) To seek permission to enter, contact the COTP or the COTP's representative by calling (503) 209–2468 or the Sector Columbia River Command Center on Channel 16 VHF–FM. Those in the safety zone must comply with all lawful orders or directions given to them by the COTP or the COTP's designated representative.

(3) The COTP will provide notice of the regulated area through advanced notice via broadcast notice to mariners and by on-scene designated representatives.

(d) *Enforcement period.* This section will be enforced from 9:30 p.m. to 11 p.m. on July 4, 2022. It will be subject to enforcement this entire period unless the COTP determines it is no longer needed, in which case the Coast Guard will inform mariners via Notice to Mariners.

Dated: June 24, 2022.

M. Scott Jackson,

Captain, U.S. Coast Guard, Captain of the Port Columbia River.

[FR Doc. 2022–14045 Filed 6–29–22; 8:45 am]

BILLING CODE 9110–04–P

DEPARTMENT OF HOMELAND SECURITY

Coast Guard

33 CFR Part 165

[Docket No. USCG–2022–0534]

Safety Zones; Annual Events in the Captain of the Port Buffalo Zone—July–August 2022

AGENCY: Coast Guard, DHS.

ACTION: Notification of enforcement of regulation.

SUMMARY: The Coast Guard will enforce certain safety zones located in the federal regulations for Annual Events in the Captain of the Port Buffalo Zone. This action is necessary and intended to protect the safety of life and property on navigable waters prior to, during, and immediately after these events. During each enforcement period, no person or vessel may enter the respective safety zone without the permission of the Captain of the Port Buffalo or a designated representative.

DATES: The regulations in 33 CFR 165.939 as listed in Table 165.939 will be enforced for the safety zones identified in the **SUPPLEMENTARY INFORMATION** section below for the dates and times specified.

FOR FURTHER INFORMATION CONTACT: If you have questions about this notification of enforcement, contact LT Justin Miller, Chief of Waterways Management, Sector Buffalo, U.S. Coast Guard; telephone 716–843–9391, email *D09-SMB-SECBuffalo-WWM@uscg.mil.*

SUPPLEMENTARY INFORMATION: The Coast Guard will enforce the Safety Zones; Annual Events in the Captain of the Port Buffalo Zone listed in the table to 33 CFR 165.939 for the following events:

i. *Brewerton Fireworks, Brewerton, NY;* The safety zone listed in Table 165.939 as (b)(19) will be enforced on all waters of Lake Oneida, Brewerton, NY within a 840-foot radius of position 43°14′16.4″ N, 076°08′03.6″ W, from 9:15 p.m. through 10:45 p.m. on July 03, 2022.

ii. *Island Festival Fireworks, Baldwinsville, NY;* The safety zone listed in Table 165.939 as (b)(21) will be enforced on all waters of the Seneca River, Baldwinsville, NY within a 1,120-foot radius of position 43°09′22.0″ N, 076°20′15″ W, from 10:00 p.m. through 10:45 p.m. on July 01, 2022.

iii. *City of Erie 4th of July Fireworks, Erie, PA;* The safety zone listed in (b)(31) will be enforced on all waters of the Lake Erie, Erie, PA within a 280-foot radius of position 42°08′17.13″ N, 080°05′30.17″ W, from 9:45 p.m. through 10:45 p.m. on July 03, 2022.

iv. *Ski Show Sylvan Beach, Sylvan Beach, NY;* The safety zone listed in (c)(5) will be enforced on all waters where Fish Creek meets Oneida Lake starting at position 43°11′36.6″ N, 75°43′53.8″ W then South to 43°11′33.7″ N, 75°43′51.2″ W then East to 43°11′42.4″ N, 75°43′38.6″ W then North to 43°11′44.5″ N, 75°43′39.7″ W then returning to the point of origin, from 10:30 a.m. through 08:15 p.m. on August 14, 2022.

Pursuant to 33 CFR 165.23, entry into, transiting, or anchoring within these safety zones during an enforcement period is prohibited unless authorized by the Captain of the Port Buffalo or his designated representative; designation need not be in writing. Those seeking permission to enter these safety zones may request permission from the Captain of the Port Buffalo via channel 16, VHF–FM. Vessels and persons granted permission to enter the safety zone shall obey the directions of the Captain of the Port Buffalo or his designated representative. While within a safety zone, all vessels shall operate at the minimum speed necessary to maintain a safe course.

In addition to this notice of enforcement in the **Federal Register**, the Coast Guard will provide the maritime community with advance notification of the enforcement periods via Broadcast Notice to Mariners or other suitable means. If the Captain of the Port Buffalo determines that the safety zone need not be enforced for the full duration stated in this notice, he may use a Broadcast Notice to Mariners to grant general permission to enter the respective safety zone.

Dated: June 23, 2022.

M.I. Kuperman,

Captain, U.S. Coast Guard, Captain of the Port Buffalo.

[FR Doc. 2022–14007 Filed 6–29–22; 8:45 am]

BILLING CODE 9110–04–P

DEPARTMENT OF HOMELAND SECURITY

Coast Guard

33 CFR 165

[Docket Number USCG–2022–0496]

RIN 1625–AA00

Safety Zone; Caruso Affiliated Holdings Fireworks Event, Newport Beach, California

AGENCY: Coast Guard, DHS.

ACTION: Temporary final rule.

SUMMARY: The Coast Guard is establishing a temporary safety zone near Balboa Pier, Newport Beach Harbor, California, around the fireworks launch barge during the loading of pyrotechnics, the transit of the barge to the display location in vicinity of Southeast of Balboa Pier, and for the duration of the fireworks display on July 4, 2022. This temporary safety zone is necessary to protect waterway users from the hazards of fireworks and harmful debris within the fall out zone during the fireworks display within Newport Beach Harbor, CA. Entry of persons or vessels into this temporary safety zone is prohibited unless specifically authorized by the Captain of the Port, Los Angeles—Long Beach, or her designated representative.

DATES: This rule is effective from 7 p.m. through 11 p.m. on July 4, 2022.

ADDRESSES: To view documents mentioned in this preamble as being available in the docket, go to *http://www.regulations.gov,* type USCG–2022–0496 in the ''SEARCH'' box and click ''SEARCH.'' Click on Open Docket Folder on the line associated with this rule.

FOR FURTHER INFORMATION CONTACT: If you have questions about this proposed rulemaking, call or email the LCDR Maria Wiener, U.S. Coast Guard Sector Los Angeles—Long Beach; telephone (310) 521–3860, email *D11-SMB-SectorLALB-WWM@uscg.mil.*

SUPPLEMENTARY INFORMATION:

I. Table of Abbreviations

CFR Code of Federal Regulations
DHS Department of Homeland Security
E.O. Executive order
FR Federal Register
LLNR Light List Number
NPRM Notice of proposed rulemaking
Pub. L. Public Law
§ Section
U.S.C. United States Code

II. Background Information and Regulatory History

The Coast Guard is issuing this temporary rule without prior notice and opportunity to comment pursuant to authority under section 4(a) of the Administrative Procedure Act (APA) (5 U.S.C. 553(b)). This provision authorizes an agency to issue a rule without prior notice and opportunity to comment when the agency for good cause finds that those procedures are ''impracticable, unnecessary, or contrary to the public interest.'' Under 5 U.S.C. 553(b)(B), the Coast Guard finds that good cause exists for not publishing a notice of proposed rulemaking (NPRM) with respect to this rule. Publishing an NPRM would be impracticable in this case due to the timing of the event. The event sponsor submitted their completed application with short notice. As the Coast Guard received late notification of the fireworks display vessels, it is impracticable to publish an NPRM with a comment period and have sufficient time to consider the comments before the scheduled event on July 4, 2022.

For the reasons stated above, we are issuing this rule, and under 5 U.S.C. 553(d)(3), the Coast Guard finds that good cause exists for making it effective less than 30 days after publication in the **Federal Register**. Delaying the effective date of this rule would be contrary to the public interest because action is necessary to protect persons and property from the dangers associated with the fireworks event on July 4, 2022.

III. Legal Authority and Need for Rule

The Coast Guard is issuing this rule under authority in 46 U.S.C. 70034; The Captain of the Port (COTP), Los Angeles—Long Beach has determined that potential hazards associated with navigation safety may arise. The fireworks display creates potential for hazards for any person or vessel within a 100-foot radius around the fireworks launch barge SWOB–20, during the loading of the pyrotechnics at Pacific Tugboat Services, 1512 Pier C St., and during the transit of the fireworks barge from Pacific Tugboat Services to the fireworks launch area. There is also a 1,000-foot safety radius around the fireworks launch barge 15 minutes prior to, and for the duration of the fireworks display. Potential hazards include accidental discharge of fireworks, dangerous projectiles, and falling hot embers or other debris. This temporary safety zone is necessary to ensure the safety of, and reduce the risk to, the public, and mariners in Newport Beach Harbor, CA.

IV. Discussion of the Rule

This rule establishes a temporary safety zone on July 4, 2022, encompassing all navigable waters from the surface to the sea floor within a 100-foot radius around the fireworks launch barge SWOB–20 during the loading of the pyrotechnics at Pacific Tugboat Services at 1512 Pier C St. The safety zone will continue during the transit of the fireworks barge from Pacific Tugboat Services to the fireworks launch site at approximate position: 33°35.474′ N; 117°53.296′ W, in vicinity of Newport Beach Harbor, CA. The temporary safety zone will then increase to 1,000-feet 15 minutes prior to, and for the duration of the fireworks display, expected to commence at 9 p.m. and last approximately 30 minutes. These coordinates are based on North American Datum of 1984.

No vessel or person is permitted to operate in the safety zone without obtaining permission from the Captain of the Port (COTP) or the COTP's designated representative. Sector Los Angeles—Long Beach may be contacted on VHF–FM Channel 16 or 310–521–3801. The general boating public will be notified prior to the enforcement of the temporary safety zone via Broadcast Notice to Mariners.

V. Regulatory Analyses

We developed this rule after considering numerous statutes and executive orders (E.O.s) related to rulemaking. Below we summarize our analyses based on a number of these statutes and E.O.s, and we discuss First Amendment rights of protestors.

A. Regulatory Planning and Review

E.O.s 12866 (''Regulatory Planning and Review'') and 13563 (''Improving Regulation and Regulatory Review'') direct agencies to assess the costs and benefits of available regulatory alternatives and, if regulation is necessary, to select regulatory approaches that maximize net benefits including potential economic, environmental, public health and safety effects, distributive impacts, and equity. E.O.13563 emphasizes the importance of quantifying both costs and benefits, of reducing costs, of harmonizing rules, and of promoting flexibility. Executive Order 13771 (''Reducing Regulation and Controlling Regulatory Costs''), directs agencies to reduce regulation and control regulatory costs and provides that ''for every one new regulation issued, at least two prior regulations be identified for elimination, and that the cost of planned regulations be prudently

managed and controlled through a budgeting process.''

This regulatory action determination is based on the size, location, duration of the safety zone. Although this rule restricts access to the waters encompassed by the safety zone, the duration of the rule is only four hours and the local waterway users will be notified via public Broadcast Notice to Mariners to ensure the safety zone will result in minimum impact. Vessels should be able to transit around the safety zone without interruption. The entities most likely to be affected are waterfront facilities, commercial vessels, and pleasure craft engaged in recreational activities.

B. Impact on Small Entities

The Regulatory Flexibility Act of 1980, 5 U.S.C. 601–612, as amended, requires Federal agencies to consider the potential impact of regulations on small entities during rulemaking. The term ''small entities'' comprises small businesses, not-for-profit organizations that are independently owned and operated and are not dominant in their fields, and governmental jurisdictions with populations of less than 50,000. The Coast Guard certifies under 5 U.S.C. 605(b) that this rule will not have a significant economic impact on a substantial number of small entities.

While some owners or operators of vessels intending to transit the safety zone may be small entities, for the reasons stated in section V.A above, this rule will not have a significant economic impact on any vessel owner or operator. Under section 213(a) of the Small Business Regulatory Enforcement Fairness Act of 1996 (Pub. L. 104–121), we want to assist small entities in understanding this rule. If the rule would affect your small business, organization, or governmental jurisdiction and you have questions concerning its provisions or options for compliance, please contact the person listed in the **FOR FURTHER INFORMATION CONTACT** section.

Small businesses may send comments on the actions of Federal employees who enforce, or otherwise determine compliance with, Federal regulations to the Small Business and Agriculture Regulatory Enforcement Ombudsman and the Regional Small Business Regulatory Fairness Boards. The Ombudsman evaluates these actions annually and rates each agency's responsiveness to small business. If you wish to comment on actions by employees of the Coast Guard, call 1–888–REG–FAIR (1–888–734–3247). The Coast Guard will not retaliate against small entities that question or complain about this rule or any policy or action of the Coast Guard.

C. Collection of Information

This rule will not call for a new collection of information under the Paperwork Reduction Act of 1995 (44 U.S.C. 3501–3520).

D. Federalism and Indian Tribal Governments

A rule has implications for federalism under E.O. 13132, Federalism, if it has a substantial direct effect on the States, on the relationship between the national government and the States, or on the distribution of power and responsibilities among the various levels of government. We have analyzed this rule under that Order and have determined that it is consistent with the fundamental federalism principles and preemption requirements described in E.O. 13132.

Also, this rule does not have tribal implications under E.O. 13175, Consultation and Coordination with Indian Tribal Governments, because it does not have a substantial direct effect on one or more Indian tribes, on the relationship between the Federal Government and Indian tribes, or on the distribution of power and responsibilities between the Federal Government and Indian tribes. If you believe this rule has implications for federalism or Indian tribes, please contact the person listed in the **FOR FURTHER INFORMATION CONTACT** section above.

E. Unfunded Mandates Reform Act

The Unfunded Mandates Reform Act of 1995 (2 U.S.C. 1531–1538) requires Federal agencies to assess the effects of their discretionary regulatory actions. In particular, the Act addresses actions that may result in the expenditure by a State, local, or tribal government, in the aggregate, or by the private sector of $100,000,000 (adjusted for inflation) or more in any one year. Though this rule will not result in such an expenditure, we do discuss the effects of this rule elsewhere in this preamble.

F. Environment

We have analyzed this rule under Department of Homeland Security Management Directive 023–01 and Environmental Planning COMDTINST 5090.1 (series), which guide the Coast Guard in complying with the National Environmental Policy Act of 1969 (42 U.S.C. 4321–4370f), and have determined that this action is one of a category of actions that do not individually or cumulatively have a significant effect on the human environment. This rule involves a safety zone in an area in the vicinity of Newport Beach Harbor, Newport, CA. Such actions are categorically excluded from further review under paragraph 60(a) of Appendix A, Table 1 of the Department of Homeland Security Directive 023–01–001–01, Rev. 01. An environmental analysis checklist supporting this determination and Record of Environmental Consideration (REC) are available in the docket where indicated under **ADDRESSES**. We seek any comments or information that may lead to the discovery of a significant environmental impact from this rule.

G. Protest Activities

The Coast Guard respects the First Amendment rights of protesters. Protesters are asked to contact the person listed in the **FOR FURTHER INFORMATION CONTACT** section to coordinate protest activities so that your message can be received without jeopardizing the safety or security of people, places or vessels.

List of Subjects in 46 U.S.C. 70034, 70051

Harbors, Marine safety, Navigation (water), Reporting and recordkeeping requirements, Security measures, Waterways.

For the reasons discussed in the preamble, the Coast Guard amends 33 CFR part 165 as follows:

PART 165—REGULATED NAVIGATION AREAS AND LIMITED ACCESS AREAS

■ 1. The authority citation for part 165 continues to read as follows:

Authority: 46 U.S.C. 70034, 70051; 33 CFR 1.05–1, 6.04–1, 6.04–6, and 160.5; Department of Homeland Security Delegation No. 0170.1.

■ 2. Add § 165.T11–100 to read as follows:

§ 165.T11–100 Safety Zone; Caruso Affiliated Holdings; Newport Beach, California.

(a) *Location.* The following area is a safety zone: all navigable waters from the surface to the sea floor within a 100-foot radius around the fireworks launch barge SWOB–20, during the loading of the pyrotechnics at Pacific Tugboat Services, 1512 Pier C St., and during the transit of the fireworks barge from Pacific Tugboat Services to the fireworks launch site in approximate position: 33°35.474′ N; 117°53.296′ W, in vicinity of Newport Beach Harbor, CA. The temporary safety zone will then increase to 1,000-feet 15 minutes prior to, and for the duration of the fireworks display, expected to commence at 9:00

p.m. on July 4th, 2022, and last approximately 30 minutes. These coordinates are based on North American Datum of 1983, World Geodetic System, 1984.

(b) *Definitions.* For the purposes of this section:

Designated representative means a Coast Guard Patrol Commander, including a Coast Guard coxswain, petty officer, or other officer operating a Coast Guard vessel and a Federal, State, and local officer designated by or assisting the Captain of the Port Los Angeles—Long Beach (COTP) in the enforcement of the safety zone.

(c) *Regulations.* (1) Under the general safety zone regulations in subpart C of this part, you may not enter the safety zone described in paragraph (a) of this section unless authorized by the COTP or the COTP's designated representative.

(2) To seek permission to enter, hail Coast Guard Sector Los Angeles—Long Beach on VHF–FM Channel 16 or call at (310) 521–3801. Those in the safety zone must comply with all lawful orders or directions given to them by the COTP or the COTP's designated representative.

(d) *Enforcement period.* This section will be enforced from 7 p.m. to 11 p.m. on July 4, 2022. The firework display is scheduled to commence at 9 p.m. This rule will be enforced during the loading, transit and duration of the fireworks display, which will be broadcasted via local Broadcast Notice to Mariners in accordance with 33 CFR 165.7.

Dated: June 23, 2022.

K.L. Bernstein,

Captain, U.S. Coast Guard Acting Captain of the Port, Los Angeles Long Beach.

[FR Doc. 2022–13992 Filed 6–29–22; 8:45 am]

BILLING CODE 9110–04–P

DEPARTMENT OF HOMELAND SECURITY

Coast Guard

33 CFR Part 165

[Docket Number USCG–2022–0544]

RIN 1625–AA00

Safety Zone; Fireworks Display, Delaware River, Philadelphia, PA

AGENCY: Coast Guard, DHS.

ACTION: Temporary final rule.

SUMMARY: The Coast Guard is establishing a temporary safety zone for waters of Delaware River near Pleasant Hill Park in Philadelphia, PA, for a fireworks display. The safety zone is needed to protect personnel, vessels, and the marine environment from potential hazards created by a fireworks display. Entry of vessels or persons into this zone is prohibited unless specifically authorized by the Captain of the Port (COTP) Delaware Bay.

DATES: This rule is effective from 9 p.m. through 10 p.m. on July 4, 2022.

ADDRESSES: To view documents mentioned in this preamble as being available in the docket, go to *https://www.regulations.gov,* type USCG–2022–0544 in the search box and click ''Search.'' Next, in the Document Type column, select ''Supporting & Related Material.''

FOR FURTHER INFORMATION CONTACT: If you have questions on this rule, call or email Petty Officer Jennifer Padilla, Sector Delaware Bay, Waterways Management Division, U.S. Coast Guard; telephone (215) 271–4814, email *Jennifer.L.Padilla@uscg.mil.*

SUPPLEMENTARY INFORMATION:

I. Table of Abbreviations

CFR Code of Federal Regulations
DHS Department of Homeland Security
FR Federal Register
NPRM Notice of proposed rulemaking
§ Section
U.S.C. United States Code

II. Background Information and Regulatory History

The Coast Guard is issuing this temporary rule without prior notice and opportunity to comment pursuant to authority under section 4(a) of the Administrative Procedure Act (APA) (5 U.S.C. 553(b)). This provision authorizes an agency to issue a rule without prior notice and opportunity to comment when the agency for good cause finds that those procedures are ''impracticable, unnecessary, or contrary to the public interest.'' Under 5 U.S.C. 553(b)(B), the Coast Guard finds that good cause exists for not publishing a notice of proposed rulemaking (NPRM) with respect to this rule because it is impracticable and contrary to the public interest to do so. There is insufficient time to allow for a reasonable comment period prior to the event. The rule must be in force by July 4, 2022. We are taking immediate action to ensure the safety of spectators and the general public from hazards associated with the fireworks display. Hazards include accidental discharge of fireworks, dangerous projectiles, and falling hot embers or other debris.

Under 5 U.S.C. 553(d)(3), the Coast Guard finds that good cause exists for making this rule effective less than 30 days after publication in the **Federal Register**. Delaying the effective date of this rule would be impracticable and contrary to the public interest. The rule needs to be in place by July 4, 2022, to mitigate the potential safety hazards associated with a fireworks display in this location.

III. Legal Authority and Need for Rule

The Coast Guard is issuing this rule under authority in 46 U.S.C. 70034 (previously 33 U.S.C. 1231). The Captain of the Port, Delaware Bay (COTP) has determined that potential hazards associated with the fireworks to be used in this July 4, 2022 display will be a safety concern for anyone within a 300-yard radius of the barge. The purpose of this rule is to ensure safety of vessels and the navigable waters in the safety zone before, during, and after the scheduled event.

IV. Discussion of the Rule

This rule establishes a temporary safety zone of the Delaware River near Pleasant Hill Park in Philadelphia, PA, during a fireworks display from a barge. The event is scheduled to take place between 9 p.m. and 10 p.m. on July 4, 2022. The safety zone will extend 300 yards around the barge, which will be anchored at approximate position latitude 40°2′22.54″ N longitude 074°59′22.03″ W. The duration of the zone is intended to protect personnel, vessels, and the marine environment in these navigable waters during the fireworks display. No vessel or person will be permitted to enter the safety zone without obtaining permission from the COTP or a designated representative.

V. Regulatory Analyses

We developed this rule after considering numerous statutes and Executive orders related to rulemaking. Below we summarize our analyses based on a number of these statutes and Executive orders, and we discuss First Amendment rights of protestors.

A. Regulatory Planning and Review

Executive Orders 12866 and 13563 direct agencies to assess the costs and benefits of available regulatory alternatives and, if regulation is necessary, to select regulatory approaches that maximize net benefits. This rule has not been designated a ''significant regulatory action,'' under Executive Order 12866. Accordingly, this rule has not been reviewed by the Office of Management and Budget (OMB).

This regulatory action determination is based on (1) although persons and vessels may not enter, transit through, anchor in, or remain within the safety zone without authorization from the

COTP Delaware Bay or a designated representative, they may operate in the surrounding area during the enforcement period; (2) persons and vessels will still be able to enter, transit through, anchor in, or remain within the regulated area if authorized by the COTP Delaware Bay; and (3) the Coast Guard will provide advance notification of the safety zone to the local maritime community by Local Notice to Mariners and Broadcast Notice to Mariners.

B. Impact on Small Entities

The Regulatory Flexibility Act of 1980, 5 U.S.C. 601–612, as amended, requires Federal agencies to consider the potential impact of regulations on small entities during rulemaking. The term ''small entities'' comprises small businesses, not-for-profit organizations that are independently owned and operated and are not dominant in their fields, and governmental jurisdictions with populations of less than 50,000. The Coast Guard certifies under 5 U.S.C. 605(b) that this rule will not have a significant economic impact on a substantial number of small entities.

While some owners or operators of vessels intending to transit the safety zone may be small entities, for the reasons stated in section V.A above, this rule will not have a significant economic impact on any vessel owner or operator.

Under section 213(a) of the Small Business Regulatory Enforcement Fairness Act of 1996 (Pub. L. 104–121), we want to assist small entities in understanding this rule. If the rule would affect your small business, organization, or governmental jurisdiction and you have questions concerning its provisions or options for compliance, please call or email the person listed in the **FOR FURTHER INFORMATION CONTACT** section.

Small businesses may send comments on the actions of Federal employees who enforce, or otherwise determine compliance with, Federal regulations to the Small Business and Agriculture Regulatory Enforcement Ombudsman and the Regional Small Business Regulatory Fairness Boards. The Ombudsman evaluates these actions annually and rates each agency's responsiveness to small business. If you wish to comment on actions by employees of the Coast Guard, call 1–888–REG–FAIR (1–888–734–3247). The Coast Guard will not retaliate against small entities that question or complain about this rule or any policy or action of the Coast Guard.

C. Collection of Information

This rule will not call for a new collection of information under the Paperwork Reduction Act of 1995 (44 U.S.C. 3501–3520).

D. Federalism and Indian Tribal Governments

A rule has implications for federalism under Executive Order 13132, Federalism, if it has a substantial direct effect on the States, on the relationship between the National Government and the States, or on the distribution of power and responsibilities among the various levels of government. We have analyzed this rule under that Order and have determined that it is consistent with the fundamental federalism principles and preemption requirements described in Executive Order 13132.

Also, this rule does not have tribal implications under Executive Order 13175, Consultation and Coordination with Indian Tribal Governments, because it does not have a substantial direct effect on one or more Indian tribes, on the relationship between the Federal Government and Indian tribes, or on the distribution of power and responsibilities between the Federal Government and Indian tribes.

E. Unfunded Mandates Reform Act

The Unfunded Mandates Reform Act of 1995 (2 U.S.C. 1531–1538) requires Federal agencies to assess the effects of their discretionary regulatory actions. In particular, the Act addresses actions that may result in the expenditure by a State, local, or tribal government, in the aggregate, or by the private sector of $100,000,000 (adjusted for inflation) or more in any one year. Though this rule will not result in such an expenditure, we do discuss the effects of this rule elsewhere in this preamble.

F. Environment

We have analyzed this rule under Department of Homeland Security Directive 023–01, Rev. 1, associated implementing instructions, and Environmental Planning COMDTINST 5090.1 (series), which guide the Coast Guard in complying with the National Environmental Policy Act of 1969 (42 U.S.C. 4321–4370f), and have determined that this action is one of a category of actions that do not individually or cumulatively have a significant effect on the human environment. This rule involves a temporary safety zone that prohibits persons and vessels from entering, transiting through, anchoring in, or remaining within a limited area on the navigable water in the Delaware River during a fireworks display lasting approximately one hour. It is categorically excluded from further review under paragraph L60a of Appendix A, Table 1 of DHS Instruction Manual 023–01–001–01, Rev. 1. A Record of Environmental Consideration supporting this determination is available in the docket. For instructions on locating the docket, see the **ADDRESSES** section of this preamble.

G. Protest Activities

The Coast Guard respects the First Amendment rights of protesters. Protesters are asked to call or email the person listed in the **FOR FURTHER INFORMATION CONTACT** section to coordinate protest activities so that your message can be received without jeopardizing the safety or security of people, places or vessels.

List of Subjects in 33 CFR Part 165

Harbors, Marine safety, Navigation (water), Reporting and recordkeeping requirements, Security measures, Waterways.

For the reasons discussed in the preamble, the Coast Guard amends 33 CFR part 165 as follows:

PART 165—REGULATED NAVIGATION AREAS AND LIMITED ACCESS AREAS

■ 1. The authority citation for part 165 continues to read as follows:

Authority: 46 U.S.C. 70034, 70051; 33 CFR 1.05–1, 6.04–1, 6.04–6, and 160.5; Department of Homeland Security Delegation No. 00170.1, Revision No. 01.2.

■ 2. Add § 165.T05–05 to read as follows:

§ 165.T05–0544 Safety Zone; Fireworks, Delaware River, Philadelphia, PA.

(a) *Location.* The following area is a safety zone: All waters of Delaware River near Pleasant Hill Park in Philadelphia, PA within 300 yards of the fireworks barge anchored in approximate position latitude 40°2′22.54″ N longitude 074°59′22.03″ W. These coordinates are based on the 1984 World Geodetic System (WGS 84).

(b) *Definitions.* As used in this section, *designated representative* means a Coast Guard Patrol Commander, including a Coast Guard coxswain, petty officer, or other officer operating a Coast Guard vessel and a Federal, State, and local officer designated by or assisting the Captain of the Port Delaware Bay (COTP) in the enforcement of the safety zone.

(c) *Regulations.* (1) Under the general safety zone regulations in subpart C of this part, you may not enter the safety zone described in paragraph (a) of this

section unless authorized by the COTP or the COTP's designated representative.

(2) To seek permission to enter or remain in the zone, contact the COTP or the COTP's representative via VHF–FM channel 16 or 215–271–4807. Those in the safety zone must comply with all lawful orders or directions given to them by the COTP or the COTP's designated representative.

(3) No vessel may take on bunkers or conduct lightering operations within the safety zone during its enforcement period.

(4) This section applies to all vessels except those engaged in law enforcement, aids to navigation servicing, and emergency response operations.

(d) *Enforcement.* The U.S. Coast Guard may be assisted in the patrol and enforcement of the safety zone by Federal, State, and local agencies.

(e) *Enforcement period.* This zone will be enforced from approximately, but no earlier than, 9 p.m. to approximately, but no later than, 10 p.m. on July 4, 2022.

Dated: June 27, 2022.

Jonathan D. Theel,

Captain, U.S. Coast Guard Captain of the Port Delaware Bay.

[FR Doc. 2022–14044 Filed 6–29–22; 8:45 am]

BILLING CODE 9110–04–P

LIBRARY OF CONGRESS

Copyright Royalty Board

37 CFR Part 370

[Docket No. 20–CRB–0007–RM]

Regulation Concerning Proxy Distributions for Unmatched Royalties Deposited During 2010–2018

AGENCY: Copyright Royalty Board, Library of Congress.

ACTION: Final rule.

SUMMARY: The Copyright Royalty Judges (Judges) are amending the applicable regulations to authorize the use of proxy reports of use to facilitate distribution of royalties collected for periods prior to January 1, 2019, for the licenses to make ephemeral reproduction and perform publicly sound recordings by means of digital audio transmissions. Proxy reports of use will be used for those services for which no reports of use were submitted or for which the reports of use were unusable.

DATES: Effective August 1, 2022.

FOR FURTHER INFORMATION CONTACT: Anita Brown, CRB Program Specialist, (202) 707–7658, *crb@loc.gov.*

SUPPLEMENTARY INFORMATION:

Background

Sections 112 and 114 of the Copyright Act, title 17 of the United States Code, are the statutory licenses governing the public performance of sound recordings by certain types of eligible services [1] by means of a digital audio transmission. 17 U.S.C. 112(e), 114. Services operating under these licenses are required to, among other things, pay royalty fees and report to copyright owners of sound recordings on the use of their works. *Id.* The Copyright Act directs the Judges to determine the royalty rates to be paid, 17 U.S.C. 114(f)(1)(A), (f)(2)(A) and 17 U.S.C. 112(e)(3), and to establish regulations to give copyright owners reasonable notice of the use of their works and create and maintain records of use for delivery to copyright owners. 17 U.S.C. 114(f)(4)(A) and 17 U.S.C. 112(e)(4).

The purpose of the notice and recordkeeping requirement is to ensure that the royalties collected under the statutory licenses are distributed by a central source—a Collective—or other agents designated to receive royalties from the Collective to the correct recipients. The Judges promulgated final notice and recordkeeping regulations on October 13, 2009.[2] *See* 74 FR 52418.

On November 20, 2018, SoundExchange, Inc., the entity designated by the Judges as the Collective, requested that the Judges amend the applicable regulations to authorize SoundExchange ''to use proxy reporting data to distribute to copyright owners and performers certain sound recording royalties for periods before 2019 that are otherwise undistributable due to licensees' failure to provide reports of use'' or their provision of ''reports of use that are so deficient as to be unusable.'' Letter from Steven R. Englund, counsel for SoundExchange, Inc., Docket No. 20–CRB–0007–RM at 1 & n.1.

In a second letter dated April 23, 2020 (April Letter), SoundExchange renewed its request. In the April Letter, SoundExchange stated it was holding approximately $32 million in statutory royalties for the period 2010 through 2018 and requested that the Judges authorize SoundExchange to distribute these royalties using the same ''annual/license type methodology'' that the Judges approved in 2011. April Letter at 2, citing 37 CFR 370.3(i), 370.4(f). SoundExchange requested that the Judges change the dates in the cited regulations from ''2010'' to ''2019.''

In May 2020, the Judges published a notice of proposed rulemaking (NPRM) seeking comment on SoundExchange's proposal. 85 FR 32323 (May 29, 2020). In the notice, the Judges also announced that, if they adopted the proposed regulations, they intended to change the mandatory ''shall'' to a permissive ''may'' to authorize the subject distributions. Comments responsive to the NPRM were due June 29, 2020.

The Judges received three comments in response to the NPRM. One commenter, David Powell, filed a comment that in no way revealed an interest in the rulemaking proceeding. The comment of Sun-Glo Records, Inc. asserted an interest in recording royalties, but did not oppose the proposed rule change.

The third comment was submitted by SoundExchange, and addresses specific topics concerning which the Judges had previously inquired in connection with this NPRM. Specifically, SoundExchange states in this comment that:

(1) It agrees with the Judges that it is preferable to use permissive language (the word ''may'') that would merely *allow* SoundExchange to use proxy data to distribute the relevant royalties, rather than mandatory regulatory language (the word ''shall'');

(2) It has exhausted all reasonable alternative means to obtain missing reports; and

(3) Use of the proposed annual/license type method, as set forth in the proposed regulations, is a reasonable option.

Given that the proxy will be applied to a small percentage of royalties for the relevant time period and that no viable alternatives have been provided, the Judges are adopting as final the proposed regulations as set forth in the NPRM allowing for the use of the proxy proposed by SoundExchange for the distribution of royalties for all periods before January 1, 2019. Adoption of the proposed regulations, especially in the absence of opposition to the proposed proxy, will promote the expeditious distribution of the affected royalties.

List of Subjects in 37 CFR Part 370

Copyright, Sound recordings.

Final Regulations

For the reasons set forth in the preamble, the Copyright Royalty Judges amend 37 CFR part 370 as follows:

[1] The types of eligible services consist of subscription, nonsubscription, satellite digital audio radio services, and business establishment services.

[2] Until that time, interim regulations were in effect. *See* 71 FR 59010 (Oct. 6, 2006).

PART 370—NOTICE AND RECORDKEEPING REQUIREMENTS FOR STATUTORY LICENSES

■ 1. The authority citation for part 370 continues to read as follows:

Authority: 17 U.S.C. 112(e)(4), 114(f)(4)(A), 803(b)(6)(A).

■ 2. Section 370.3 is amended by revising paragraph (i) to read as follows:

§ 370.3 Reports of use of sound recordings under statutory license for preexisting subscription services.

* * * * *

(i) In any case in which a preexisting subscription service has not provided a report of use required under this section for use of sound recordings under section 112(e) or section 114 of title 17 of the United States Code, or both, prior to January 1, 2019, reports of use for the corresponding calendar year filed by other preexisting subscription services may serve as the reports of use for the non-reporting service, solely for purposes of distribution of any corresponding royalties by the Collective.

■ 3. Section 370.4 is amended by revising paragraph (f) to read as follows:

§ 370.4 Reports of use of sound recordings under statutory license for nonsubscription transmission services, preexisting satellite digital audio radio services, new subscription services and business establishment services.

* * * * *

(f) In any case in which a nonsubscription transmission service, preexisting satellite digital audio radio service, new subscription service, or business establishment service has not provided a report of use required under this section for use of sound recordings under section 112(e) or section 114 of title 17 of the United States Code, or both, prior to January 1, 2019, reports of use for the corresponding calendar year filed by other services of the same type may serve as the reports of use for the non-reporting service, solely for purposes of distribution of any corresponding royalties by the Collective.

Dated: June 13, 2022.

Suzanne M. Barnett,

Chief U.S. Copyright Royalty Judge.

Approved by:

Carla D. Hayden,

Librarian of Congress.

[FR Doc. 2022–13944 Filed 6–29–22; 8:45 am]

BILLING CODE 1410–72–P

DEPARTMENT OF HEALTH AND HUMAN SERVICES

45 CFR Part 75

RIN 0991–AC16

Grants Regulation; Removal of Non-Discrimination Provisions and Repromulgation of Administrative Provisions Under the Uniform Grant Regulation

AGENCY: Assistant Secretary for Financial Resources (ASFR), Health and Human Services (HHS or the Department).

ACTION: Final rule; delay of effective date.

SUMMARY: The U.S. District Court for the District of Columbia in *Facing Foster Care et al.* v. *HHS,* 21–cv–00308 (D.D.C. Feb. 2, 2021), has delayed the effective date of portions of the final rule making amendments to the Uniform Administrative Requirements promulgated on January 12, 2021.

DATES: Pursuant to court order, the effective date of the final rule published January 12, 2021, at 86 FR 2257, is delayed until July 1, 2022. See **SUPPLEMENTARY INFORMATION** for details.

FOR FURTHER INFORMATION CONTACT: Johanna Nestor at *Johanna.Nestor@hhs.gov* or 202–205–5904.

SUPPLEMENTARY INFORMATION: On January 12, 2021 (86 FR 2257), the Department issued amendments to and repromulgated portions of the Uniform Administrative Requirements, 45 CFR part 75. 86 FR 2257. That rule repromulgated provisions of part 75 that were originally published late in 2016. It also made amendments to 45 CFR 75.300(c) & (d).

Specifically, the rule amended subsection (c), which had stated, ''It is a public policy requirement of HHS that no person otherwise eligible will be excluded from participation in, denied the benefits of, or subjected to discrimination in the administration of HHS programs and services based on non-merit factors such as age, disability, sex, race, color, national origin, religion, gender identity, or sexual orientation. Recipients must comply with this public policy requirement in the administration of programs supported by HHS awards.'' The rule amended subsection (c) to state, ''It is a public policy requirement of HHS that no person otherwise eligible will be excluded from participation in, denied the benefits of, or subjected to discrimination in the administration of HHS programs and services, to the extent doing so is prohibited by federal statute.''

Additionally, the rule amended paragraph (d), which had stated, ''In accordance with the Supreme Court decisions in *United States* v. *Windsor* and in *Obergefell* v. *Hodges,* all recipients must treat as valid the marriages of same-sex couples. This does not apply to registered domestic partnerships, civil unions or similar formal relationships recognized under state law as something other than a marriage.'' The rule amended paragraph (d) to state, ''HHS will follow all applicable Supreme Court decisions in administering its award programs.''

On February 2, the portions of rule-making amendments to § 75.300 (and a conforming amendment at § 75.101(f)) were challenged in the U.S. District Court for the District of Columbia. *Facing Foster Care et al.* v. *HHS,* 21–cv–00308 (D.D.C. filed Feb. 2, 2021). On February 9, the court postponed, pursuant to 5 U.S.C. 705, the effective date of the challenged portions of the rule by 180 days, until August 11, 2021.[1] On August 5, the court again postponed the effective date of the rule until November 9, 2021.[2] On November 3, the court further postponed the effective date of the rule until January 17, 2022.[3] On December 27, the court further postponed the effective date of the rule until April 18, 2022.[4] On April 15, the court further postponed the effective date of the rule until May 2, 2022.[5] On April 29, the court further postponed the effective date of the rule until June 1, 2022.[6] On May 26, the court further postponed the effective date of the rule until July 1, 2022.[7] The Department is issuing this notice to apprise the public of the court's order.

Xavier Becerra,

Secretary.

[FR Doc. 2022–13888 Filed 6–29–22; 8:45 am]

BILLING CODE 4151–19–P

[1] *See* Order, *Facing Foster Care et al.* v. *HHS,* No. 21–cv–00308 (D.D.C. Feb. 2, 2021) (order postponing effective date), ECF No. 18.

[2] *See* Order, *Facing Foster Care et al.* v. *HHS,* No. 21–cv–00308 (D.D.C. Aug. 5, 2021) (order postponing effective date), ECF No. 23.

[3] *See* Order, *Facing Foster Care et al.* v. *HHS,* No. 21–cv–00308 (D.D.C. Nov. 3, 2021) (order postponing effective date), ECF No. 8.

[4] *See* Order, *Facing Foster Care et al.* v. *HHS,* No. 21–cv–00308 (D.D.C. Dec. 27, 2021) (order postponing effective date and holding the case in abeyance).

[5] *See* Order, *Facing Foster Care et al.* v. *HHS,* No. 21–cv–00308 (D.D.C. Apr. 15, 2022) (order postponing effective date), ECF No 34.

[6] *See* Order, *Facing Foster Care et al.* v. *HHS,* No. 21–cv–00308 (D.D.C. Apr. 29, 2022) (order postponing effective date), ECF No 37.

[7] *See* Order, *Facing Foster Care et al.* v. *HHS,* No. 21–cv–00308 (D.D.C. May 26, 2022) (order postponing effective date), ECF No 39.

DEPARTMENT OF COMMERCE

National Oceanic and Atmospheric Administration

50 CFR Part 648

[RTID 0648–XB846]

Magnuson-Stevens Fishery Conservation and Management Act Provisions; Fisheries of the Northeastern United States; Amendment 8 to the Northeast Skate Complex Fishery Management Plan

AGENCY: National Marine Fisheries Service (NMFS), National Oceanic and Atmospheric Administration (NOAA), Commerce.

ACTION: Notice of Agency decision.

SUMMARY: NMFS approves Amendment 8 to the Northeast Skate Complex Fishery Management Plan, as submitted by the New England Fishery Management Council. This amendment updates the management objectives of the skate fishery management plan, which have not been changed since the original plan was adopted in 2003. The purpose of this action is to ensure that the skate management continues to reflect and address the current needs and condition of the skate fishery.

DATES: The amendment was approved on June 24, 2022.

ADDRESSES: The New England Fishery Management Council prepared a supporting document for this action that describes the proposed revisions to the Northeast Skate management objectives and consistency with applicable law. NMFS prepared a Categorical Exclusion (CE) for this action in compliance with the National Environmental Policy Act, detailing why this action is administrative in nature and may be categorically excluded from requirements to prepare either an Environmental Impact Statement or Environmental Assessment. Copies of the Council document for Amendment 8, the CE, and other supporting documents for this action, are available upon request from Thomas A. Nies, Executive Director, New England Fishery Management Council, 50 Water Street, Newburyport, MA 01950. These documents are also accessible via the internet at *https://www.nefmc.org/management-plans/skates.*

FOR FURTHER INFORMATION CONTACT: Cynthia Ferrio, Fishery Policy Analyst, (978) 281–9180.

SUPPLEMENTARY INFORMATION:

Background

The New England Fishery Management Council manages a complex of seven skate species (barndoor, clearnose, little, rosette, smooth, thorny, and winter skate) off the New England and mid-Atlantic coasts under the Northeast Skate Complex Fishery Management Plan (FMP). This FMP was originally adopted in 2003, and the FMP management goal and objectives have been unchanged since that time. This action updates two of the seven management objectives of the Northeast Skate FMP, with the intent to ensure that skate management continues to reflect and address the current needs and condition of the skate fishery.

Over the course of several meetings throughout 2021, the Council determined that a few aspects within the existing FMP objectives are out of date and should be revised. These updates were originally included in Amendment 5 to the Northeast Skate FMP (85 FR 84304), and subsequently Framework Adjustment 9 to the FMP (86 FR 64186), before both actions were discontinued. On February 1, 2022, the Council voted to submit the revisions to the Northeast Skate FMP objectives as Amendment 8. Although FMP objectives guide management decisions for the skate fishery, they are not formally codified within the regulatory text, and the changes within this action are administrative in nature with no immediate or direct impact on the fishery and/or the skate regulations.

NMFS published a Notification of Availability (NOA) for Amendment 8 in the **Federal Register** on April 1, 2022 (87 FR 19063), with a comment period ending on May 31, 2022. See the Comments and Responses section for additional detail.

The Magnuson-Stevens Fishery Conservation and Management Act (Magnuson-Stevens Act) allows NMFS as the implementing agency to approve, partially approve, or disapprove measures recommended by the Council in an amendment based on whether the action is consistent with the FMP, the Magnuson-Stevens Act and its National Standards, and other applicable law. After considering public comment on the NOA, NMFS approved Amendment 8 in its entirety on June 24, 2022. This notice announces the Agency's decision to approve Amendment 8.

Approved Action

NMFS is approving Amendment 8 in its entirety as adopted by the Council. This action revises two of the seven objectives of the Northeast Skate Complex FMP, to update guidance for regulatory decisions and to ensure that skate management continues to reflect and address the current needs and condition of the fishery. Prior to revision, these objectives referenced some rebuilt species of skate as overfished, and future goals for the fishery that have already been accomplished. Amendment 8 updates skate management objectives 2 and 5 to read as follows:

- *Objective 2:* Implement measures to: protect any overfished species of skates and increase their biomass to target levels and prevent overfishing of the species in the Northeast skate complex—this may be accomplished through management measures in other FMPs (groundfish, monkfish, scallops), skate-specific management measures, or a combination, as necessary.
- *Objective 5:* Promote and encourage skate research for critical biological, ecological, and fishery information based on the research needs identified and updated by the Council.

Additional information on this action can be found in the Council document and CE for this amendment (See **ADDRESSES**).

Comments and Responses

NMFS received one comment during the public comment period for this action. The comment was not directly responsive to the action, but concerned the overall preservation of skate species. NMFS agrees that conservation of the skate resource is important, and the revision of management goals and objectives in this action will help achieve this purpose. After careful consideration of the received comment, NMFS is approving Amendment 8 in its entirety.

Changes From the Proposed Action

There are no changes to the action recommended by the Council and described in the Notification of Availability for Amendment 8 to the Northeast Skate Complex FMP.

Authority: 16 U.S.C. 1801 *et seq.*

Dated: June 24, 2022.

Samuel D. Rauch, III,

Deputy Assistant Administrator for Regulatory Programs, National Marine Fisheries Service.

[FR Doc. 2022–13970 Filed 6–29–22; 8:45 am]

BILLING CODE 3510–22–P

Proposed Rules

Federal Register
Vol. 87, No. 125
Thursday, June 30, 2022

This section of the FEDERAL REGISTER contains notices to the public of the proposed issuance of rules and regulations. The purpose of these notices is to give interested persons an opportunity to participate in the rule making prior to the adoption of the final rules.

DEPARTMENT OF AGRICULTURE

Agricultural Marketing Service

7 CFR Part 905

[Doc. No.: AMS–SC–21–0054]

Amendments to the Marketing Order for Oranges, Grapefruit, Tangerines, and Pummelos Grown in Florida

AGENCY: Agricultural Marketing Service, Agriculture (USDA).

ACTION: Proposed rule.

SUMMARY: This rulemaking invites comments on proposed amendments to Marketing Order 905, which regulates the handling of oranges, grapefruit, tangerines, and pummelos grown in Florida. Proposed amendments reduce the size of the Committee and quorum requirements, revise the nomination and selection processes, remove the requirement of allocating committee seats on the basis of volume from each district, and add a new section to provide the Committee authority to receive voluntary contributions for promotion and research projects. Other concurring changes to align the marketing order with proposed amendments were also recommended.

DATES: Comments received by August 29, 2022 will be considered prior to issuance of a final rule.

ADDRESSES: Interested persons are invited to submit written comments concerning this proposed rule. Comments must be submitted to the Docket Clerk electronically by Email: *MarketingOrderComment@usda.gov* or internet: *https://www.regulations.gov.* All comments should reference the document number and the date and page number of this issue of the **Federal Register** and can be viewed at: *https://www.regulations.gov.* All comments submitted in response to this proposal will be included in the record and will be made available to the public. Please be advised that the identity of the individuals or entities submitting the comments will be made public on the internet at the address provided above.

FOR FURTHER INFORMATION CONTACT: Geronimo Quinones, Marketing Specialist, or Matthew Pavone, Chief, Rulemaking Services Branch, Market Development Division, Specialty Crops Program, AMS, USDA, 1400 Independence Avenue SW, Stop 0237, Washington, DC 20250–0237; Telephone: (202) 720–2491, or Email: *Geronimo.quinones@usda.gov* or *Matthew.pavone@usda.gov.*

Small businesses may request information on complying with this regulation by contacting Richard Lower, Market Development Division, Specialty Crops Program, AMS, USDA, 1400 Independence Avenue SW, Stop 0237, Washington, DC 20250–0237; Telephone: (202) 720–2491, or Email: *Richard.Lower@usda.gov.*

SUPPLEMENTARY INFORMATION: This action, pursuant to 5 U.S.C. 553, proposes amendments to regulations issued to carry out a marketing order as defined in 7 CFR 900.2(j). This proposal is issued under Marketing Order No. 905, as amended (7 CFR part 905), regulating the handling of oranges, grapefruit, tangerines, and pummelos grown in Florida. Part 905 (referred to as the ''Order'') is effective under the Agricultural Marketing Agreement Act of 1937, as amended (7 U.S.C. 601–674), hereinafter referred to as the ''Act.'' The Committee locally administers the Order and is comprised of citrus producers and shippers operating within the area of production, and a non-industry member.

Section 8c(17) of the Act (7 U.S.C. 608c(17)) and the applicable rules of practice and procedure governing the formulation of marketing agreements and orders (7 CFR part 900) authorize amendment of the Order through this informal rulemaking action. The Agricultural Marketing Service (AMS) will consider comments received in response to this proposed rule, and based on all the information available, will determine if the Order amendment is warranted. If AMS determines amendment of the Order is warranted, a subsequent proposed rule and notice of referendum would be issued, and producers would be allowed to vote for or against the proposed amendments. AMS would then issue a final rule effectuating any amendments approved by producers in the referendum.

AMS is issuing this proposed rule in conformance with Executive Orders 12866 and 13563. Executive Orders 12866 and 13563 direct agencies to assess all costs and benefits of available regulatory alternatives and, if regulation is necessary, to select regulatory approaches that maximize net benefits (including potential economic, environmental, public health and safety effects, distributive impacts, and equity). Executive Order 13563 emphasizes the importance of quantifying both costs and benefits, reducing costs, harmonizing rules, and promoting flexibility. This action falls within a category of regulatory actions that the Office of Management and Budget (OMB) exempted from Executive Order 12866 review.

In addition, this proposed rule has been reviewed under Executive Order 13175—Consultation and Coordination with Indian Tribal Governments, which requires agencies to consider whether their rulemaking actions would have tribal implications. AMS has determined this proposed rule is unlikely to have substantial direct effects on one or more Indian tribes, on the relationship between the Federal Government and Indian tribes, or on the distribution of power and responsibilities between the Federal Government and Indian tribes.

This proposal has also been reviewed under Executive Order 12988, Civil Justice Reform. This rule is not intended to have retroactive effect. This rule shall not be deemed to preclude, preempt, or supersede any State program covering oranges, grapefruit, tangerines, and pummelos grown in Florida.

The Act provides that administrative proceedings must be exhausted before parties may file suit in court. Under section 8c(15)(A) of the Act (7 U.S.C. 608 (15)(A)), any handler subject to an order may file with the U.S. Department of Agriculture (USDA) a petition stating that the order, any provision of the order, or any obligation imposed in connection with the order is not in accordance with law and request a modification of the order or to be exempted therefrom. A handler is afforded the opportunity for a hearing on the petition. After the hearing, USDA would rule on the petition. The Act provides that the district court of the United States in any district in which the handler is an inhabitant, or has his

or her principal place of business, has jurisdiction to review USDA's ruling on the petition, provided an action is filed no later than 20 days after the date of entry of the ruling.

Section 1504 of the Food, Conservation, and Energy Act of 2008 (2008 Farm Bill) (Pub. L. 110–246) amended section 8c(17) of the Act, which in turn required the addition of supplemental rules of practice to 7 CFR part 900 (73 FR 49307; August 21, 2008). The amendment of section 8c(17) of the Act and the supplemental rules of practice authorize the use of informal rulemaking (5 U.S.C. 553) to amend Federal fruit, vegetable, and nut marketing agreements and orders. AMS may use informal rulemaking to amend marketing orders depending upon the nature and complexity of the proposed amendments, the potential regulatory and economic impacts on affected entities, and any other relevant matters.

AMS has considered these factors and has determined that the amendments proposed herein are not unduly complex and the nature of the proposed amendments is appropriate for utilizing the informal rulemaking process to amend the Order. A discussion of the potential regulatory and economic impacts on affected entities is discussed later in the ''Initial Regulatory Flexibility Analysis'' section of this proposed rule.

The Committee unanimously recommended the amendments following deliberations at a public meeting held on November 19, 2020. The proposals would reduce the size of the Committee and quorum requirements, revise the nomination and selection processes, eliminate the requirement of allocating Committee seats on the basis of volume from each district, and add a new section to provide the Committee authority to receive voluntary contributions for promotion/research projects. Other concurring changes to align the marketing order with the proposed amendments were also recommended.

Proposal 1—Reduce Committee Size

Section 905.19 currently provides that the Committee consists of at least eight but not more than nine grower members, and eight shipper members. A designation between grower and shipper members on the Committee is also provided in § 905.19.

This proposal would amend § 905.19 by reducing the size of the Committee from at least eight but not more than nine grower members, and eight shipper members, to 10 grower members. The Committee would be grower-based, consisting of 10 members and 10 alternate members, which would eliminate the designation of shipper members. The grower members would be producers who produce within the district for which they are nominated and selected to represent. The proposed revisions would allow grower members to also be shippers or employees of shippers, which is limited under the current regulations. However, the Committee may establish alternative qualifications for such grower members with approval of the Secretary. The option to increase the Committee by one non-industry member nominated by the Committee and selected by the Secretary would remain unchanged.

Section 905.14 currently provides that the Committee can redefine the districts, reapportion or change the grower membership of districts, or both, provided that Committee membership consists of at least eight but not more than nine grower members.

This proposal would amend § 905.14 by revising the reference to total number of member seats from at least eight but not more than nine grower members, to 10 grower members. This change would align this section with the proposed new Committee size.

Section 905.20 provides that members and their alternates serve a 2-year term of office, but that has not included non-industry members due to the current § 905.150(d). This proposal would align the terms of office for all members by removing language from § 905.150(d), which created a 1-year term of office for non-industry members and replacing it with language specifying a 2-year term of office for non-industry members.

Since promulgation of the Order in 1957, the Florida citrus industry has undergone consolidation and crop loss. Increasing labor costs, real estate pressures, and citrus greening have been contributing factors. Current industry structure shows there are few growers who are not affiliated with handlers and most of the handlers are also growers. Total citrus acreage is about half of what it was at its peak production and has declined 22 percent from 2010 to 2020. Not distinguishing between grower and shipper members and decreasing the Committee's size to 10 members and 10 alternate members would make Committee membership more reflective of today's industry. The Committee would be able to fill all its member positions with less difficulty. Aligning the term of the public member to the same 2-year term as the rest of the Committee will also improve efficiency and the effectiveness of the position. A 2-year term will help ensure that the public member can contribute to the work of the Committee at a higher level.

Proposal 2—Revise Nomination and Selection Process

For grower members, § 905.22 currently provides that, on even numbered years, nominees for open grower member and alternate member positions shall be chosen by ballot. In support of this nomination process, § 905.22(a) further provides that the Committee will publicly announce and hold grower meetings no later than June 10 to make those nominations. The nominees chosen in this manner, along with the vote certification and any other information requested, will be submitted by the secretary and chairman of each grower-meeting to the USDA Secretary of Agriculture (Secretary) on or before June 20. At least two of the grower-nominees and their alternates will be affiliated with a bona fide cooperative marketing organization. Section 905.22(b) outlines the process for nominating shipper members and their alternates.

This proposal would amend § 905.22 by removing the designation of shipper members. Section 905.22(a)(1) would be revised by changing the deadline for Committee nominees from June 10 to April 10, and the deadline for presenting nominees for selection to the Secretary from June 20 to April 20. A revision to § 905.22(a)(2) would add language to clarify that grower members are producers who may also be shippers or who are also employees of shippers. The requirement that at least two of the grower nominees and their alternates be affiliated with a bona fide cooperative marketing organization would be changed to one grower nominee and their alternate.

Section 905.23 currently provides that the Secretary will select members and alternate members from each district. The grower nominations will be made from qualified persons and at least two members and their alternates shall be affiliated with bona fide cooperative marketing organizations. Furthermore, the Secretary shall select at least two shipper members and their alternates to represent bona fide cooperative marketing organizations of handlers. The remaining shipper members and their alternates represent handlers who are not affiliated. Section 905.29 currently provides that when a member and that member's alternate are unable to attend a meeting, any alternate designated by the member or Committee to act in his or her stead for that meeting must represent the same affiliation as the member.

Section 905.23 would be amended by removing the allocation of Committee seats by district from the selection

process. Proposed changes to § 905.29 would eliminate the requirement that any person designated to serve on the Committee in the absence of a member and his or her alternate represent the same group affiliation as the absent member and alternate. This would not apply to the public member.

Currently there are three districts. A nomination meeting is scheduled in each district for growers and shippers. Votes are cast by each respective district for each member type and the corresponding alternate. Growers participate in the nomination process for grower members and alternates, while shippers participate in the nomination process for shippers and their alternates. Alternates must meet the same requirements of the member, which further complicates finding suitable candidates for nomination. Because handlers crisscross the state buying fruit, the differentiation of districts no longer serves a practical purpose since all but one shipper sources fruit from multiple districts. With the current shrinking of the industry and the number of growers and shippers working as both, eliminating the distinction between growers and shippers will make it easier to facilitate the nomination and selection process and better reflect the current industry.

Proposal 3—Revise Quorum Requirements

Currently, § 905.34 states that 10 members of the Committee shall constitute a quorum, and any action of the committee shall require at least 10 concurring votes. Five of those concurring votes must be grower votes. It also states that the Committee may provide for meeting by telephone, telegraph, or other means of communication.

This proposal would modify § 905.34 to allow seven members to constitute a quorum, with six concurring votes required to pass any motion or approve any Committee action. Finally, a small change would eliminate ''telegraph'' as a valid means of communication.

The Committee is experiencing difficulties obtaining a quorum at meetings to conduct business activities. Many industry members are fulfilling multiple roles. Reductions in staff due to rising operational costs has made it difficult for smaller growers and handlers to leave their businesses to participate in meetings. These factors are making it more difficult to fill the seats on the Committee. Adjusting the current requirements would enable the Committee to operate fully and reduce the risk of not establishing a quorum during scheduled meetings or not having the required votes to pass any action. These changes would help to increase the Committee's effectiveness.

Proposal 4—Authority To Accept Voluntary Contributions From Domestic Sources

Section 905.54 of the Order authorizes the Committee, with the approval of the Secretary, to establish research, marketing, and promotional projects. This proposal would add a new § 905.43 to provide the Committee with authority to receive voluntary contributions from domestic sources to fund promotional and research projects. Any contributions made to the Committee will be free from any encumbrances by the donor and the Committee will retain complete control of their use.

Presently, research and promotional activities are administered by the Florida Department of Citrus, which is a state agency. Such projects are generally funded by grower assessments through the Florida Department of Citrus and are administered by the Florida Citrus Commission. At the Committee's request, research and promotional authority was added to the Order in 2009 (74 FR 46303) to ensure that a mechanism exists for the Committee to conduct those activities. Such activities are paid by assessments authorized by the Order. Consequently, increases to the assessment rate may be needed if the Committee desires to increase its research or promotional activities. Furthermore, while it is expected that the state agency will continue to exist and offer these services, should the agency close, the Committee could ensure that fresh citrus research continues. The Committee believes that the ability to receive voluntary contributions toward such projects, may eliminate the need to use or increase the assessment rate, thereby minimizing financial pressure on producers. Contributions would be used for more research and promotional activities that would benefit the entire industry.

The following concurring changes would also be made to align the Order with the above amendments:

Section 905.114 would be revised to create a single district, down from the current number of three. Florida Citrus acreage has declined from approximately 900,000 acres to approximately 435,000 acres. As previously discussed in Proposal #1, because of the effects of citrus greening, handlers must access fruit from statewide sources. Currently, only one handler packs fruit exclusively from its own district, while all other handlers access fruit from all districts and production areas. The changes to § 905.114 would create one statewide district, better reflecting current industry structure and practices.

Section 905.120 would be revised to eliminate any reference to handlers as a distinct class for purposes of nominations, since such designations will no longer be relevant to the process. The volume vote for shipper nominations and shipper designations would also be eliminated from § 905.120. By eliminating the volume vote, the Committee expects this would provide small growers greater opportunity and representation moving forward.

Finally, changes to § 905.150 would remove reference of the public member serving a 1-year term. This would align the public member with all members and their alternates, which serve a 2-year term of office.

Initial Regulatory Flexibility Analysis

Pursuant to requirements set forth in the Regulatory Flexibility Act (RFA) (5 U.S.C. 601–612), the AMS has considered the economic impact of this proposed rule on small entities. Accordingly, AMS has prepared this initial regulatory flexibility analysis.

The purpose of the RFA is to fit regulatory actions to the scale of businesses subject to such actions so that small businesses will not be unduly or disproportionately burdened.

Small agricultural producers of orange groves have been defined by the Small Business Administration (SBA) (13 CFR 121.201) as those having annual receipts of no more than $3,500,000. Small agricultural service firms (handlers) are defined as those with annual receipts of no more than $30,000,000.

The proposed amendments to the Order would reduce the Committee's size and quorum requirements, revise nomination and selection processes, eliminate the requirement to allocate Committee seats based on volume from each district, and add a new section authorizing the Committee to receive domestically sourced voluntary contributions and grant funds for promotion/research projects. These amendments are necessary to reflect the industry's current structure and size. Since the promulgation of the marketing order in 1957, the Florida citrus industry has undergone consolidation and crop reduction. The current districts are not relevant because handlers routinely source fruit from across the State. As a result, it has become difficult for the Committee to fill the member seats and obtain a quorum to conduct business activities. The proposals would align the

Committee with the industry's current size and structure. Authority to accept voluntary contributions from domestic sources would allow the Committee to collaborate with other organizations for research and promotional activities.

There are approximately 15 handlers of Florida citrus who are subject to regulation under the Order and approximately 500 citrus producers in the regulated area. Small agricultural service firms are defined by the Small Business Administration (SBA) as those having annual receipts of less than $30,000,000, and small agricultural producers of orange groves are defined as those having annual receipts of less than $3,500,000 (13 CFR 121.201).

According to data from the National Agricultural Statistics Service (NASS) and the Citrus Administrative Committee, the weighted average packing house door equivalent price for fresh Florida citrus for the 2020–21 season was approximately $6.52 per carton with total shipments of around 6,022,426 cartons. Based on this information, the majority of handlers have average annual receipts of less than $30,000,000 ($6.52 times 6,022,426 cartons equals $39,266,217.52 divided by 15 handlers equals $2,617,747.83 per handler).

In addition, based on the NASS data, the weighted average grower price for the 2020–21 season was estimated at $4.95 per carton of fresh citrus. Based on grower price, shipment data, and the total number of Florida citrus growers, the average annual grower revenue is below $3,500,000 ($4.95 times 6,022,426 million cartons equals $29,811,008.70; divided by 500 growers equals $59,622.02 per grower). Thus, the majority of Florida citrus handlers and growers may be classified as small entities.

AMS has determined that the proposed amendments would not have a significant impact on a substantial number of small businesses. Rather, large and small entities alike would be expected to benefit from the Committee's improved ability to address important issues of interest to all on a timely basis. The proposed reduction in the number of seats on the Committee, and the reduced quorum and voting requirements, would not require any significant changes in producer or handler business operations, and no significant industry educational effort would be needed. Producers and handlers, large and small alike, would incur no additional costs. No small businesses would be unduly or disproportionately burdened as a result of this proposal going into effect.

Paperwork Reduction Act

In accordance with the Paperwork Reduction Act of 1995 (44 U.S.C. Chapter 35), the Order's information collection requirements have been previously approved by OMB and assigned OMB No. 0581–0189, Fruit Crops. No changes in those requirements are necessary because of this action. Should any changes become necessary, they would be submitted to OMB for approval.

This proposed rule would impose no additional reporting or recordkeeping requirements on either small or large Florida citrus handlers. As with all Federal marketing order programs, reports and forms are periodically reviewed to reduce information requirements and duplication by industry and public-sector agencies. AMS has not identified any relevant Federal rules that duplicate, overlap, or conflict with this rulemaking.

AMS is committed to complying with the E-Government Act, to promote the use of the internet and other information technologies to provide increased opportunities for citizen access to Government information and services, and for other purposes.

The November 19, 2020, Committee meeting was widely publicized throughout the production area. Meetings are held virtually or in a hybrid style. Participants both large and small, have a choice whether to attend in person or virtually and can participate in the Committee's deliberations on all issues.

Interested persons are invited to submit comments on the proposed amendments to the Order, including comments on the regulatory and information collection impacts of this action on small businesses.

Following analysis of any comments received on the amendments in this proposed rule, AMS will evaluate all available information and determine whether to proceed. If appropriate, a proposed rule and notice of referendum would be issued, and producers would be provided the opportunity to vote for or against the proposed amendments. Information about the referendum, including dates and voter eligibility requirements, would be published in a future issue of the **Federal Register**. A final rule would then be issued to effectuate any amendments favored by producers participating in the referendum.

A small business guide on complying with fruit, vegetable, and specialty crop marketing agreements and orders may be viewed at: *https://www.ams.usda.gov/rules-regulations/moa/small-businesses.* Any questions about the compliance guide should be sent to Richard Lower at the previously mentioned address in the **FOR FURTHER INFORMATION CONTACT** section.

General Findings

The findings hereinafter set forth are supplementary to the findings and determinations, which were previously made in connection with the issuance of Marketing Order 905; and all said previous findings and determinations are hereby ratified and affirmed, except insofar as such findings and determinations may be in conflict with the findings and determinations set forth herein.

1. Marketing Order 905 as hereby proposed to be amended and all the terms and conditions thereof, would tend to effectuate the declared policy of the Act;

2. Marketing Order 905 as hereby proposed to be amended regulates the handling of oranges, grapefruit, tangerines, and pummelos grown in Florida and is applicable only to persons in the respective classes of commercial and industrial activity specified in the Order;

3. Marketing Order 905 as hereby proposed to be amended is limited in application to the smallest regional production area which is practicable, consistent with carrying out the declared policy of the Act, and the issuance of several marketing orders applicable to subdivisions of the production area would not effectively carry out the declared policy of the Act;

4. Marketing Order 905 as hereby proposed to be amended prescribes, insofar as practicable, such different terms applicable to different parts of the production area as are necessary to give due recognition to the differences in the production and marketing of oranges, grapefruit, tangerines, and pummelos produced or packed in the production area; and

5. All handling of oranges, grapefruit, tangerines, and pummelos produced or packed in the production area as defined in Marketing Order 905 is in the current of interstate or foreign commerce or directly burdens, obstructs, or affects such commerce.

A 60-day comment period is provided to allow interested persons to respond to these proposals. Any comments received on the amendments proposed in this rulemaking will be analyzed, and if AMS determines to proceed based on all the information presented, a producer referendum would be conducted to determine producer support for the proposed amendments. If appropriate, a final rule would then

be issued to effectuate the amendments favored by producers participating in the referendum.

List of Subjects in 7 CFR Part 905

Grapefruit, Marketing agreements, Oranges, Pummelos, Reporting and recordkeeping requirements, Tangelos, Tangerines.

For the reasons set forth in the preamble, the Agricultural Marketing Service proposes to amend 7 CFR part 905 as follows:

PART 905—ORANGES, GRAPEFRUIT, TANGERINES, AND PUMMELOS GROWN IN FLORIDA

■ 1. The authority citation for 7 CFR part 905 continues to read as follows:

Authority: 7 U.S.C. 601–674.

■ 2. Amend § 905.14 by revising paragraph (a) introductory text to read as follows:

§ 905.14 Redistricting.

(a) The Committee may, with the approval of the Secretary, redefine the districts into which the production area is divided or reapportion or otherwise change the grower membership of districts, or both: Provided, That the membership shall consist of 10 grower members, and any such change shall be based, insofar as practicable, upon the respective averages for the immediately preceding three fiscal periods of:

* * * * *

■ 3. Amend § 905.19 by revising paragraph (a) to read as follows:

§ 905.19 Establishment and membership.

(a) There is hereby established a Citrus Administrative Committee consisting of 10 grower members. Grower members shall be producers who produce within the district for which they are nominated and selected to represent. Grower members may be persons who, in addition to being producers, are shippers or employees of shippers: Provided, that the committee, with the approval of the Secretary, may establish alternative qualifications for such grower members. The committee may be increased by one non-industry member nominated by the committee and selected by the Secretary. The committee, with approval of the Secretary, shall prescribe qualifications, term of office, and the procedure for nominating the non-industry member.

* * * * *

■ 4. Revise § 905.22 to read as follows:

§ 905.22 Nominations.

(a)(1) The Committee shall give public notice of a meeting of producers in each district, to be held not later than April 10th of even-numbered years, for the purpose of making nominations for grower members and alternate grower members. The Committee, with the approval of the Secretary, shall prescribe uniform rules to govern such meetings and the balloting thereat. The chairman of each meeting shall publicly announce at such meeting the names of the persons nominated, and the chairman and secretary of each such meeting shall transmit to the Secretary their certification as to the number of votes so cast, the names of the persons nominated, and such other information as the Secretary may request. All nominations shall be submitted to the Secretary on or before the 20th day of April.

(2) Each nominee shall be a producer in the district from which he or she is nominated. In voting for nominees, each producer shall be entitled to cast one vote for each nominee in each of the districts in which he or she is a producer. At least one of the nominees and their alternates so nominated shall be affiliated with a bona fide cooperative marketing organization.

(b) Notwithstanding the provisions of paragraph (a) of this section, nomination and election of members and alternate members to the Committee may be conducted by mail, electronic mail, or other means according to rules and regulations recommended by the Committee and approved by the Secretary.

■ 5. Revise § 905.23 to read as follows:

§ 905.23 Selection.

From the nominations made pursuant to § 905.22(a) or from other qualified persons, the Secretary shall select 10 members and 10 alternates. At least one such member and their alternate shall be affiliated with a bona fide cooperative marketing organization.

■ 6. Amend § 905.29 by revising paragraph (b) to read as follows:

§ 905.29 Inability of members to serve.

* * * * *

(b) If both a member and his or her respective alternate are unable to attend a committee meeting, such member may designate another alternate to act in his or her place in order to obtain a quorum. If the member is unable to designate such an alternate, the committee members present may designate such alternate.

* * * * *

■ 7. Amend § 905.34 by revising paragraphs (a) through (c) to read as follows:

§ 905.34 Procedure of committees.

(a) Seven members of the committee shall constitute a quorum.

(b) For any decision or recommendation of the Committee to be valid, six concurring votes shall be necessary: Provided, that the Committee may recommend a regulation restricting the shipment of grapefruit grown in Regulation Area I or Regulation Area II which meets the requirements of the Improved No. 2 grade or the Improved No. 2 Bright grade only upon the affirmative vote of a majority of its members present from the regulation area in which such restriction would apply; and whenever a meeting to consider a recommendation for release of such grade is requested by a majority of the members from the affected area, the committee shall hold a meeting within a reasonable length of time for the purpose of considering such a recommendation. If after such consideration the requesting area majority present continues to favor such release for their area, the request shall be considered a valid recommendation and transmitted to the Secretary. The votes of each member cast for or against any recommendation made pursuant to this subpart shall be duly recorded. Whenever an assembled meeting is held each member must vote in person.

(c) The committee may provide for meeting by telephone, or other means of communication, and any vote cast at such a meeting shall be promptly confirmed in writing: Provided, that if any assembled meeting is held, all votes shall be cast in person.

* * * * *

■ 8. Add § 905.43 to read as follows:

§ 905.43 Contributions.

The Committee may accept voluntary contributions. Such contributions shall be free from any encumbrances by the donor and the Committee shall retain complete control of their use.

■ 9. Revise § 905.80 to read as follows:

§ 905.80 Fruit not subject to regulation.

(a) Except as otherwise provided in this section, any person may, without regard to the provisions of §§ 905.52 and 905.53 and the regulations issued under §§ 905.52 and 905.53, ship any variety for the following purposes:

(1) To a charitable institution for consumption by such institution;

(2) To a relief agency for distribution by such agency;

(3) To a commercial processor for conversion by such processor into canned or frozen products or into a beverage base;

(4) By U.S. Mail or private courier; or

(5) In such minimum quantities, types of shipments, or for such purposes as the Committee with the approval of the Secretary may specify.

(b) No assessment shall be levied on fruit shipped under paragraph (a) of this section.

(c) The Committee shall, with the approval of the Secretary, prescribe such rules, regulations, or safeguards as it may deem necessary to prevent varieties handled under the provisions of this section from entering channels of trade for other than the purposes authorized by this section. Such rules, regulations, and safeguards may include the requirements that handlers shall file applications with the committee for authorization to handle a variety pursuant to this section, and that such applications be accompanied by a certification by the intended purchaser or receiver that the variety will not be used for any purpose not authorized by this section.

■ 10. Revise § 905.114 to read as follows:

§ 905.114 Redistricting of citrus districts and reapportionment of grower members.

Pursuant to § 905.14, the citrus districts and membership allotted each district shall be as follows: Citrus District One shall include that portion of the State of Florida, which is bounded by the Suwannee River, the Georgia border, the Atlantic Ocean, and the Gulf of Mexico. This district shall have 10 members and 10 alternates.

■ 11. Amend § 905.120 by:

■ a. Revising paragraphs (d) and (e).

■ b. Removing paragraphs (f) and (g).

The revisions read as follows:

§ 905.120 Nomination procedure.

* * * * *

(d) At each meeting each eligible person may cast one vote for each of the persons to be nominated to represent the district or group, as the case may be.

(e) Voting may be by written ballot. If written ballots are used, all ballots shall be delivered by the chairman or the secretary of the meeting to the agent of the Secretary. If written ballots are not used, the committee's representative shall deliver to the Secretary's agent a listing of each person nominated and a count of the number of votes cast for each nominee for grower member and alternate. Said representative shall also provide the agent the register of eligible voters present at each meeting, a listing of each person nominated, and the number of votes cast.

■ 12. Amend § 905.150 by revising paragraph (d) to read as follows:

§ 905.150 Eligibility requirements for public member and alternate member.

* * * * *

(d) The public member should be nominated by the Citrus Administrative Committee and should serve a 2-year term which coincides with the term of office of grower members of the Committee.

Erin Morris,

Associate Administrator, Agricultural Marketing Service.

[FR Doc. 2022–13934 Filed 6–29–22; 8:45 am]

BILLING CODE P

DEPARTMENT OF ENERGY

10 CFR Part 431

[EERE–2017–BT–STD–0009]

RIN 1904–AD79

Energy Conservation Program: Energy Conservation Standards for Walk-In Coolers and Freezers

AGENCY: Office of Energy Efficiency and Renewable Energy, Department of Energy.

ACTION: Notification of availability of preliminary technical support document and request for comment.

SUMMARY: The U.S. Department of Energy (''DOE'' or ''the Department'') announces the availability of the preliminary analysis it has conducted for purposes of evaluating the need for amending the current energy conservation standards for walk-in coolers and freezers (''walk-ins'' or ''WICFs''). The analysis is set forth in the Department's accompanying preliminary technical support document (''TSD'') for this rulemaking. DOE will hold a public meeting via webinar to discuss and receive comment on the preliminary analysis. The meeting will cover the analytical framework, models, and tools that DOE is using to evaluate potential standards; the results of preliminary analyses performed by DOE; the potential energy conservation standard levels derived from these analyses (if DOE determines that proposed amendments are necessary); and other relevant issues. In addition, DOE encourages written comments on these subjects.

DATES:

Comments: Written comments and information will be accepted on or before, August 29, 2022.

Meeting: DOE will hold a webinar on Friday, July, 22, 2022, from 1 to 4 p.m. See section IV, ''Public Participation,'' for webinar registration information, participant instructions and information about the capabilities available to webinar participants.

ADDRESSES: Interested persons are encouraged to submit comments using the Federal eRulemaking Portal at *https://www.regulations.gov,* under docket number EERE–2017–BT–STD–0009. Follow the instructions for submitting comments. Alternatively, interested persons may submit comments, identified by docket number EERE–2017–BT–STD–0009, by any of the following methods:

(1) *Email: WICF2017STD0009@ee.doe.gov.* Include the docket number EERE–2017–BT–STD–0009 in the subject line of the message.

(2) *Postal Mail:* Appliance and Equipment Standards Program, U.S. Department of Energy, Building Technologies Office, Mailstop EE–5B, 1000 Independence Avenue SW, Washington, DC 20585–0121. Telephone: (202) 287–1445. If possible, please submit all items on a compact disc (''CD''), in which case it is not necessary to include printed copies.

(3) *Hand Delivery/Courier:* Appliance and Equipment Standards Program, U.S. Department of Energy, Building Technologies Office, 950 L'Enfant Plaza SW, 6th Floor, Washington, DC 20024. Telephone: (202) 287–1445. If possible, please submit all items on a CD, in which case it is not necessary to include printed copies.

No telefacsimiles (''faxes'') will be accepted. For detailed instructions on submitting comments and additional information on this process, see section IV of this document.

To inform interested parties and to facilitate this rulemaking process, DOE has prepared an agenda, a preliminary TSD, and briefing materials, which are available on the DOE website at: *https://www1.eere.energy.gov/buildings/appliance_standards/standards.aspx?productid=56&action=viewlive.*

Docket: The docket for this activity, which includes **Federal Register** notices, comments, public meeting transcripts, and other supporting documents/materials, is available for review at *https://www.regulations.gov.* All documents in the docket are listed in the *https://www.regulations.gov* index. However, some documents listed in the index, such as those containing information that is exempt from public disclosure, may not be publicly available.

The docket web page can be found at *https://www.regulations.gov/docket/EERE-2017-BT-STD-0009.* The docket web page contains instructions on how to access all documents, including

public comments in the docket. See section IV of this document for information on how to submit comments through *https://www.regulations.gov.*

FOR FURTHER INFORMATION CONTACT:

Dr. Stephanie Johnson, U.S. Department of Energy, Office of Energy Efficiency and Renewable Energy, Building Technologies, EE–5B, 1000 Independence Avenue SW, Washington, DC 20585–0121. Telephone: (202) 287–1943. Email: *ApplianceStandardsQuestions@ee.doe.gov.*

Mr. Michael Kido, U.S. Department of Energy, Office of the General Counsel, GC–33, 1000 Independence Avenue SW, Washington, DC 20585–0121. Telephone: (202) 586–8145. Email: *Michael.Kido@hq.doe.gov.*

For further information on how to submit a comment, review other public comments and the docket, or participate in the public meeting, contact the Appliance and Equipment Standards Program staff at (202) 287–1445 or by email: *ApplianceStandardsQuestions@ee.doe.gov.*

SUPPLEMENTARY INFORMATION:

Table of Contents

I. Introduction
A. Authority
B. Rulemaking Process
C. Deviation From Appendix A
II. Background
A. Current Standards
B. Current Process
III. Summary of the Analyses Performed by DOE
A. Market and Technology Assessment
B. Screening Analysis
C. Engineering Analysis
D. Markups Analysis
E. Energy Use Analysis
F. Life-Cycle Cost and Payback Period Analyses
G. National Impact Analysis
IV. Public Participation
A. Participation in the Webinar
B. Procedure for Submitting Prepared General Statements for Distribution
C. Conduct of the Webinar
D. Submission of Comments
V. Approval of the Office of the Secretary

I. Introduction

A. Authority

The Energy Policy and Conservation Act, as amended (''EPCA''),[1] authorizes DOE to regulate the energy efficiency of a number of consumer products and certain industrial equipment. (42 U.S.C. 6291–6317) Title III, Part C[2] of EPCA established the Energy Conservation Program for Certain Industrial Equipment. This equipment includes walk-in coolers and walk-in freezers, the subject of this document. (42 U.S.C. 6311(1)(G))

EPCA prescribes a set of basic requirements for walk-ins. First, all walk-in doors narrower than 3 feet 9 inches and shorter than 7 feet must have automatic door closers that firmly close all walk-in doors that have been closed to within 1 inch of full closure. All walk-ins must also have strip doors, spring hinged doors, or other methods of minimizing infiltration when doors are open. Additionally, walk-ins must contain wall, ceiling, and door insulation of at least R–25 for coolers and R–32 for freezers, excluding glazed portions of doors and structural members, and floor insulation of at least R–28 for freezers. Walk-in evaporator fan motors of under 1 horsepower (''hp'') and less than 460 volts must be electronically commutated motors (brushless direct current motors) or three-phase motors, and walk-in condenser fan motors of under 1 horsepower must use permanent split capacitor motors, electronically commutated motors, or three-phase motors. Interior light sources must have an efficacy of 40 lumens per watt or more, including any ballast losses; less-efficacious lights may only be used in conjunction with a timer or device that turns off the lights within 15 minutes of when the walk-in is unoccupied. (*See* 42 U.S.C. 6313(f)(1))

Additionally, EPCA requires that walk-in freezers with transparent reach-in doors and windows must have triple-pane glass with either heat-reflective treated glass or gas fill. Transparent walk-in cooler doors and windows must have either double-pane glass with heat-reflective treated glass and gas fill or triple-pane glass with heat-reflective treated glass or gas fill. (42 U.S.C. 6313(f)(3)(A)–(B)) EPCA also prescribes specific anti-sweat heater-related requirements: Walk-ins without anti-sweat heater controls must have a heater power draw of no more than 7.1 or 3.0 watts per square foot of door opening for freezers and coolers, respectively. If walk-ins have a heater power draw of more than 7.1 or 3.0 watts per square foot of door opening for freezers and coolers, respectively, then the walk-in must have anti-sweat heater controls that reduce the energy use of the heater in a quantity corresponding to the relative humidity of the air outside the door or to the condensation on the inner glass pane. *See* 42 U.S.C. 6313(f)(3)(C)–(D).

Additionally, EPCA prescribed two cycles of WICF-specific rulemakings; the first to establish performance-based standards that achieve the maximum improvement in energy that the Secretary determines is technologically feasible and economically justified, and the second to determine whether to amend those standards. (42 U.S.C. 6313(f)(4) and (5)) DOE has satisfied the first of these requirements. *See* 79 FR 32050 (June 3, 2014) (establishing WICF performance standards) and 82 FR 31808 (July 10, 2017) (addressing prior rulemaking errors by amending certain refrigeration system class standards). This document addresses the second cycle of rulemaking.

EPCA further provides that, not later than 6 years after the issuance of any final rule establishing or amending a standard, DOE must publish either a notification of determination that standards for the equipment do not need to be amended, or a notice of proposed rulemaking (''NOPR'') including new proposed energy conservation standards (proceeding to a final rule, as appropriate). (42 U.S.C. 6316(a); 42 U.S.C. 6295(m)(1)) Not later than three years after issuance of a final determination not to amend standards, DOE must publish either a notice of determination that standards for the equipment do not need to be amended, or a NOPR including new proposed energy conservation standards (proceeding to a final rule, as appropriate). (42 U.S.C. 6316(a); 42 U.S.C. 6295(m)(3)(B))

Under EPCA, any new or amended energy conservation standard must be designed to achieve the maximum improvement in energy efficiency that DOE determines is technologically feasible and economically justified. (42 U.S.C. 6316(a); 42 U.S.C. 6295(o)(2)(A)) Furthermore, the new or amended standard must result in a significant conservation of energy. (42 U.S.C. 6316(a); 42 U.S.C. 6295(o)(3)(B))

DOE is publishing this Preliminary Analysis to collect data and information to inform its decision consistent with its obligations under EPCA.

B. Rulemaking Process

DOE must follow specific statutory criteria for prescribing new or amended standards for covered equipment, including walk-ins. As noted, EPCA requires that any new or amended energy conservation standard prescribed by the Secretary of Energy (''Secretary'') be designed to achieve the maximum improvement in energy efficiency (or water efficiency for certain products specified by EPCA) that is technologically feasible and

[1] All references to EPCA in this document refer to the statute as amended through the Energy Act of 2020, Public Law 116–260 (Dec. 27, 2020), which reflect the last statutory amendments that impact Parts A and A–1 of EPCA.

[2] For editorial reasons, upon codification in the U.S. Code, Part C was redesignated Part A–1.

economically justified. (42 U.S.C. 6316(a); 42 U.S.C. 6295(o)(2)(A)) Furthermore, DOE may not adopt any standard that would not result in the significant conservation of energy. (42 U.S.C. 6316(a); 42 U.S.C. 6295(o)(3))

The significance of energy savings offered by a new or amended energy conservation standard cannot be determined without knowledge of the specific circumstances surrounding a given rulemaking.[3] For example, the United States has now rejoined the Paris Agreement on February 19, 2021. As part of that agreement, the United States has committed to reducing greenhouse gas (''GHG'') emissions in order to limit the rise in mean global temperature.[4] As such, energy savings that reduce GHG emission have taken on greater importance. Additionally, some covered products and equipment have most of their energy consumption occur during periods of peak energy demand. The impacts of these products on the energy infrastructure can be more pronounced than products with relatively constant demand. In evaluating the significance of energy savings, DOE considers differences in primary energy and FFC effects for different covered products and equipment when determining whether energy savings are significant. Primary energy and FFC effects include the energy consumed in electricity production (depending on load shape), in distribution and transmission, and in extracting, processing, and transporting primary fuels (*i.e.,* coal, natural gas, petroleum fuels), and thus present a more complete picture of the impacts of energy conservation standards. Accordingly, DOE evaluates the significance of energy savings on a case-by-case basis.

DOE has initially determined the energy savings for the candidate standard levels evaluated in this preliminary analysis rulemaking are ''significant'' within the meaning of 42 U.S.C. 6295(o)(3)(B).

To determine whether a standard is economically justified, EPCA requires that DOE determine whether the benefits of the standard exceed its burdens by considering, to the greatest extent practicable, the following seven factors:

(1) The economic impact of the standard on the manufacturers and consumers of the products subject to the standard;

(2) The savings in operating costs throughout the estimated average life of the covered products in the type (or class) compared to any increase in the price, initial charges, or maintenance expenses for the covered products that are likely to result from the standard;

(3) The total projected amount of energy (or as applicable, water) savings likely to result directly from the standard;

(4) Any lessening of the utility or the performance of the products likely to result from the standard;

(5) The impact of any lessening of competition, as determined in writing by the Attorney General, that is likely to result from the standard;

(6) The need for national energy and water conservation; and

(7) Other factors the Secretary of Energy (Secretary) considers relevant.

(42 U.S.C. 6316(a); 42 U.S.C. 6295(o)(2)(B)(i)(I)–(VII))

DOE fulfills these and other applicable requirements by conducting a series of analyses throughout the rulemaking process. Table I.1 shows the individual analyses that are performed to satisfy each of the requirements within EPCA.

TABLE I.1—EPCA REQUIREMENTS AND CORRESPONDING DOE ANALYSIS

EPCA requirement	Corresponding DOE analysis
Significant Energy Savings	• Shipments Analysis. • National Impact Analysis. • Energy Use Analysis.
Technological Feasibility	• Market and Technology Assessment. • Screening Analysis. • Engineering Analysis.
Economic Justification:	
1. Economic impact on manufacturers and consumers.	• Manufacturer Impact Analysis. • Life-Cycle Cost and Payback Period Analysis. • Life-Cycle Cost Subgroup Analysis. • Shipments Analysis.
2. Lifetime operating cost savings compared to increased cost for the product.	• Markups for Equipment Price Analysis. • Energy Use Analysis. • Life-Cycle Cost and Payback Period Analysis.
3. Total projected energy savings	• Shipments Analysis. • National Impact Analysis.
4. Impact on utility or performance	• Screening Analysis. • Engineering Analysis.
5. Impact of any lessening of competition	• Manufacturer Impact Analysis.
6. Need for national energy and water conservation	• Shipments Analysis. • National Impact Analysis.
7. Other factors the Secretary considers relevant	• Employment Impact Analysis. • Utility Impact Analysis. • Emissions Analysis. • Monetization of Emission Reductions Benefits.[5] • Regulatory Impact Analysis.

[3] Procedures, Interpretations, and Policies for Consideration in New or Revised Energy Conservation Standards and Test Procedures for Consumer Products and Commercial/Industrial Equipment, 86 FR 70892, 70901 (Dec. 13, 2021).

[4] *See* Executive Order 14008, 86 FR 7619 (Feb. 1, 2021) (''Tackling the Climate Crisis at Home and Abroad'').

[5] On March 16, 2022, the Fifth Circuit Court of Appeals (No. 22–30087) granted the Federal government's emergency motion for stay pending appeal of the February 11, 2022, preliminary injunction issued in *Louisiana* v. *Biden,* No. 21–cv–1074–JDC–KK (W.D. La.). As a result of the Fifth Circuit's order, the preliminary injunction is no longer in effect, pending resolution of the Federal government's appeal of that injunction or a further court order. Among other things, the preliminary injunction enjoined the defendants in that case from ''adopting, employing, treating as binding, or relying upon'' the interim estimates of the social cost of greenhouse gases—which were issued by the Interagency Working Group on the Social Cost of Greenhouse Gases on February 26, 2021—to monetize the benefits of reducing greenhouse gas emissions. In the absence of further intervening court orders, DOE will revert to its approach prior to the injunction and present monetized benefits where appropriate and permissible under law.

Further, EPCA establishes a rebuttable presumption that a standard is economically justified if the Secretary finds that the additional cost to the consumer of purchasing equipment complying with an energy conservation standard level will be less than three times the value of the energy savings during the first year that the consumer will receive as a result of the standard, as calculated under the applicable test procedure. (42 U.S.C. 6316(a); 42 U.S.C. 6295(o)(2)(B)(iii))

EPCA also contains what is known as an ''anti-backsliding'' provision, which prevents the Secretary from prescribing any amended standard that either increases the maximum allowable energy use or decreases the minimum required energy efficiency of a covered equipment. (42 U.S.C. 6316(a); 42 U.S.C. 6295(o)(1)) Also, the Secretary may not prescribe an amended or new standard if interested persons have established by a preponderance of the evidence that the standard is likely to result in the unavailability in the United States in any covered equipment type (or class) of performance characteristics (including reliability), features, sizes, capacities, and volumes that are substantially the same as those generally available in the United States. (42 U.S.C. 6316(a); 42 U.S.C. 6295(o)(4))

Additionally, EPCA specifies requirements when promulgating an energy conservation standard for covered equipment that has two or more subcategories. DOE must specify a different standard level for a type or class of equipment that has the same function or intended use, if DOE determines that products within such group: (A) consume a different kind of energy from that consumed by other covered equipment within such type (or class); or (B) have a capacity or other performance-related feature which other equipment within such type (or class) do not have and such feature justifies a higher or lower standard. (42 U.S.C. 6316(a); 42 U.S.C. 6295(q)(1)) In determining whether a performance-related feature justifies a different standard for a group of products, DOE must consider such factors as the utility to the consumer of the feature and other factors DOE deems appropriate. *Id.* Any rule prescribing such a standard must include an explanation of the basis on which such higher or lower level was established. (42 U.S.C. 6316(a); 42 U.S.C. 6295(q)(2))

Before proposing a standard, DOE typically seeks public input on the analytical framework, models, and tools that DOE intends to use to evaluate standards for the equipment at issue and the results of preliminary analyses DOE performed for the product.

DOE is examining whether to amend the current standards pursuant to its obligations under EPCA. This notification announces the availability of the preliminary TSD, which details the preliminary analyses and summarizes the preliminary results of DOE's analyses. In addition, DOE is announcing a public meeting to solicit feedback from interested parties on its analytical framework, models, and preliminary results.

C. Deviation From Appendix A

In accordance with section 3(a) of 10 CFR part 430, subpart C, appendix A (''appendix A''), applicable to walk-ins under 10 CFR 431.4, DOE notes that it is deviating from the provision in appendix A regarding the pre-NOPR stages for an energy conservation standards rulemaking. Section 6(a)(2) of appendix A states that if the Department determines it is appropriate to proceed with a rulemaking (after initiating the rulemaking process through an early assessment), the preliminary stages of a rulemaking to issue or amend an energy conservation standard that DOE will undertake will be a framework document and preliminary analysis, or an advance notice of proposed rulemaking (''ANOPR''). DOE is opting to deviate from this provision by publishing a preliminary analysis without a framework document. A framework document is intended to introduce and summarize the various analyses DOE conducts during the rulemaking process and requests initial feedback from interested parties. As discussed further in the following section, prior to this notification of the preliminary analysis, DOE issued an early assessment request for information on July 16, 2021 (''July 2021 RFI'') in which DOE identified and sought data, information, and comment to evaluate whether the existing energy conservation standards for walk-ins should be amended. 86 FR 37687, 37689. DOE provided a 30-day comment period for the RFI. DOE intends to rely on substantively the same analytical methods as those used in the most recent rulemakings for walk-ins, making publication of a framework document largely redundant with the July 2021 RFI. As such, DOE is not publishing a framework document.

DOE notes that it is also deviating from the provision in appendix A regarding the length of comment periods for the pre-NOPR stages for an energy conservation standards rulemaking. Section 6(d)(2) of appendix A specifies that the length of the public comment period for pre-NOPR rulemaking documents will not be less than 75 calendar days. For the preliminary analysis, DOE has opted instead to provide a 60-day comment period. As stated, DOE requested comment in the July 2021 RFI on the analysis conducted in support of the last energy conservation standard rulemaking for WICFs. Given that the analysis will largely remain the same, and in light of the 30-day comment period DOE has already provided with its July 2021 RFI, DOE has determined that a 60-day comment period is sufficient to enable interested parties to review the tentative methodologies and accompanying analysis to develop meaningful comments in response to the preliminary TSD.

II. Background

A. Current Standards

In a final rule published on June 3, 2014 (''June 2014 Final Rule''), DOE adopted the current energy conservation standards for walk-in doors, panels, and medium-temperature dedicated condensing systems manufactured on and after June 5, 2017. 79 FR 32050. In the June 2014 Final Rule, DOE also adopted standards for other classes of refrigeration systems; however, after publication of the June 2014 Final Rule, the Air-Conditioning, Heating and Refrigeration Institute (''AHRI'') and Lennox International, Inc. (''Lennox''), a manufacturer of walk-in refrigeration systems, filed petitions for review of DOE's final rule and DOE's subsequent denial of a petition for reconsideration of the rule (79 FR 59090 (October 1, 2014)) with the United States Court of Appeals for the Fifth Circuit. *Lennox Int'l* v. *Dep't of Energy,* Case No. 14–60535 (5th Cir.). As a result of this litigation, a settlement agreement was reached to address, and a controlling order from the Fifth Circuit vacated, standards for six of the refrigeration system equipment classes—the two energy conservation standards applicable to multiplex condensing refrigeration systems (subsequently re-named as ''unit coolers'') operating at medium and low temperatures and the four energy conservation standards applicable to dedicated condensing refrigeration systems operating at low temperatures.[6] After the Fifth Circuit issued its order, DOE established a Working Group to negotiate energy

[6] The thirteen other standards established in the June 2014 Final Rule (*i.e.,* the four standards applicable to dedicated condensing refrigeration systems operating at medium-temperatures; the three standards applicable to panels; and the six standards applicable to doors) were not vacated.

conservation standards to replace the six vacated standards. 80 FR 46521 (August 5, 2015). The Working Group assembled its recommendations into a Term Sheet (See Docket EERE–2015–BT–STD–0016–0056) that was presented to, and approved by, the Appliance Standards and Rulemaking Federal Advisory Committee (''ASRAC'') on December 18, 2015. (EERE–2015–BT–STD–0016–0055 at p. 11)

In a final rule published on July 10, 2017 (''July 2017 Final Rule''), DOE published a final rule adopting current energy conservation standards for the six classes of walk-in refrigeration systems for which the prior standards were vacated—specifically, unit coolers and low-temperature dedicated condensing systems manufactured on and after July 10, 2020. 82 FR 31808. These standards are set forth in DOE's regulations at 10 CFR 431.306 and are repeated in Tables II.1 through II.3.

TABLE II.1—FEDERAL ENERGY CONSERVATION STANDARDS FOR WALK-IN COOLERS AND WALK-IN FREEZER DOORS

Equipment class	Equations for maximum daily energy use (kWh/day)
Display door, medium temperature	$0.04 \times A_{dd} + 0.41$
Display door, low temperature	$0.15 \times A_{dd} + 0.29$
Passage door, medium temperature	$0.05 \times A_{nd} + 1.7$
Passage door, low temperature	$0.14 \times A_{nd} + 4.8$
Freight door, medium temperature	$0.04 \times A_{nd} + 1.9$
Freight door, low temperature	$0.12 \times A_{nd} + 5.6$

A_{dd} or A_{nd} = surface area of the display door or non-display door, respectively, expressed in ft^2, as determined in appendix A to subpart R of 10 CFR part 431.

TABLE II.2—FEDERAL ENERGY CONSERVATION STANDARDS FOR WALK-IN COOLERS AND WALK-IN FREEZER PANELS

Equipment class	Minimum R-value ($h\text{-}ft^2\text{-}°F/Btu$)
Wall or ceiling panels, medium temperature	25
Wall or ceiling panels, low temperature	32
Floor panels, low temperature	28

TABLE II.3—FEDERAL ENERGY CONSERVATION STANDARDS FOR WALK-IN COOLERS AND WALK-IN FREEZER REFRIGERATION SYSTEMS

Equipment class	Minimum AWEF (Btu/W-h)
Dedicated condensing system, medium temperature, indoor	5.61
Dedicated condensing system, medium temperature, outdoor	7.60
Dedicated condensing system, low temperature, indoor with a net capacity (q_{net}) of <6,500 Btu/h.	$9.091 \times 10^{-5} \times q_{net} + 1.81$
Dedicated condensing system, low temperature, indoor with a net capacity (q_{net}) of ≥6,500 Btu/h.	2.40
Dedicated condensing system, low temperature, outdoor with a net capacity (q_{net}) of <6,500 Btu/h.	$6.522 \times 10^{-5} \times q_{net} + 2.73$
Dedicated condensing system, low temperature, outdoor with a net capacity (q_{net}) of ≥6,500 Btu/h.	3.15
Unit cooler, medium temperature	9.00
Unit cooler, low temperature, indoor with a net capacity (q_{net}) of <15,500 Btu/h	$1.575 \times 10^{-5} \times q_{net} + 3.91$
Unit cooler, low temperature, indoor with a net capacity (q_{net}) of ≥15,500 Btu/h	4.15

B. Current Process

As noted earlier, DOE published an RFI to initiate an early assessment review to determine whether any new or amended standards would satisfy the relevant requirements of EPCA for a new or amended energy conservation standard for walk-ins and to solicit relevant information from the public. 86 FR 37687. Through the RFI, DOE sought data and information to, among other things, help the agency determine whether DOE should propose a ''no new standard'' determination because a more stringent standard: (1) would not result in a significant savings of energy; (2) is not technologically feasible; (3) is not economically justified; or (4) any combination of foregoing. *Id.*

Comments received to date as part of the current process have helped DOE identify and resolve issues related to the preliminary analyses. Chapter 2 of the preliminary TSD summarizes and addresses the comments received.

III. Summary of the Analyses Performed by DOE

A. Market and Technology Assessment

DOE develops information in the market and technology assessment that provides an overall picture of the market for the products concerned, including general characteristics of the products, the industry structure, manufacturers, market characteristics, and technologies used in the products. This activity includes both quantitative and qualitative assessments, based primarily on publicly available information. The subjects addressed in the market and technology assessment include: (1) a determination of the scope of the rulemaking and product classes, (2) manufacturers and industry structure, (3) existing efficiency programs, (4) shipments information, (5) market and industry trends, and (6) technologies or design options that

could improve the energy efficiency of the product.

See chapter 3 of the preliminary TSD for further discussion of the market and technology assessment.

B. Screening Analysis

DOE uses the following five screening criteria to determine which technology options are suitable for further consideration in an energy conservation standards rulemaking:

(1) *Technological feasibility.* Technologies that are not incorporated in commercial products or in working prototypes will not be considered further.

(2) *Practicability to manufacture, install, and service.* If it is determined that mass production and reliable installation and servicing of a technology in commercial products could not be achieved on the scale necessary to serve the relevant market at the time of the projected compliance date of the standard, then that technology will not be considered further.

(3) *Impacts on product utility or product availability.* If it is determined that a technology would have a significant adverse impact on the utility of the product for significant subgroups of consumers or would result in the unavailability of any covered product type with performance characteristics (including reliability), features, sizes, capacities, and volumes that are substantially the same as products generally available in the United States at the time, it will not be considered further.

(4) *Adverse impacts on health or safety.* If it is determined that a technology would have significant adverse impacts on health or safety, it will not be considered further.

(5) *Unique-pathway proprietary technologies.* If a design option utilizes proprietary technology that represents a unique pathway to achieving a given efficiency level, that technology will not be considered further due to the potential for monopolistic concerns.

10 CFR part 430, subpart C, appendix A, sections 6(b)(3) and 7(b).

If DOE determines that a technology, or a combination of technologies, fails to meet one or more of the listed five criteria, it will be excluded from further consideration in the engineering analysis.

See chapter 4 of the preliminary TSD for further discussion of the screening analysis.

C. Engineering Analysis

The purpose of the engineering analysis is to establish the relationship between the efficiency and cost of walk-ins. There are two elements to consider in the engineering analysis; the selection of efficiency levels to analyze (*i.e.,* the ''efficiency analysis'') and the determination of equipment cost at each efficiency level (*i.e.,* the ''cost analysis''). In determining the performance of higher-efficiency equipment, DOE considers technologies and design option combinations not eliminated by the screening analysis. For each equipment class, DOE estimates the manufacturer production cost (''MPC'') for the baseline as well as higher efficiency levels. The output of the engineering analysis is a set of cost-efficiency ''curves'' that are used in downstream analyses (*i.e.,* the LCC and PBP analyses and the NIA).

DOE converts the MPC to the manufacturer selling price (''MSP'') by applying a manufacturer markup. The MSP is the price the manufacturer charges its first customer, when selling into the equipment distribution channels. The manufacturer markup accounts for manufacturer non-production costs and profit margin. DOE developed the manufacturer markup by examining publicly available financial information for manufacturers of the covered product.

See Chapter 5 of the preliminary TSD for additional detail on the engineering analysis.

D. Markups Analysis

The markups analysis develops appropriate markups (*e.g.,* retailer markups, distributor markups, contractor markups) in the distribution chain and sales taxes to convert MSP estimates derived in the engineering analysis to consumer prices, which are then used in the LCC and PBP analysis. At each step in the distribution channel, companies mark up the price of the equipment to cover business costs and profit margin.

DOE developed baseline and incremental markups for each agent in the distribution chain. Baseline markups are applied to the price of products with baseline efficiency, while incremental markups are applied to the difference in price between baseline and higher-efficiency models (the incremental cost increase). The incremental markup is typically less than the baseline markup and is designed to maintain similar per-unit operating profit before and after new or amended standards.[7]

Chapter 6 of the preliminary TSD provides details on DOE's development of markups for walk-ins.

E. Energy Use Analysis

The purpose of the energy use analysis is to determine the annual energy consumption of walk-ins at different efficiencies in representative U.S. commercial buildings and to assess the energy savings potential of increased walk-in efficiency. The energy use analysis estimates the range of energy use of walk-ins in the field (*i.e.,* as they are actually used by consumers). The energy use analysis provides the basis for other analyses DOE performed, particularly assessments of the energy savings and the savings in consumer operating costs that could result from adoption of amended or new standards.

Chapter 7 of the preliminary TSD addresses the energy use analysis.

F. Life-Cycle Cost and Payback Period Analyses

The effect of new or amended energy conservation standards on individual consumers usually involves a reduction in operating cost and an increase in purchase cost. DOE used the following two metrics to measure consumer impacts:

- The LCC is the total consumer expense of an appliance or equipment over the life of that product, consisting of total installed cost (MSP, distribution chain markups, sales tax, and installation costs) plus operating costs (expenses for energy use, maintenance, and repair). To compute the operating costs, DOE discounts future operating costs to the time of purchase and sums them over the lifetime of the product.
- The PBP is the estimated amount of time (in years) it takes consumers to recover the increased purchase cost (including installation) of a more-efficient equipment through lower operating costs. DOE calculates the PBP by dividing the change in purchase cost at higher efficiency levels by the change in annual operating cost for the year that amended or new standards are assumed to take effect.

Chapter 8 of the preliminary TSD addresses the LCC and PBP analyses.

G. National Impact Analysis

The NIA estimates the national energy savings (''NES'') and the net present value (''NPV'') of total consumer costs and savings expected to result from amended standards at specific efficiency

[7] Because the projected price of standards-compliant products is typically higher than the price of baseline products, using the same markup for the incremental cost and the baseline cost would result in higher per-unit operating profit. While such an outcome is possible, DOE maintains that in markets that are reasonably competitive it is unlikely that standards would lead to a sustainable increase in profitability in the long run.

levels (referred to as candidate standard levels).[8] DOE calculates the NES and NPV for the potential standard levels considered based on projections of annual equipment shipments, along with the annual energy consumption and total installed cost data from the energy use and LCC analyses. For the present analysis, DOE projected the energy savings, operating cost savings, equipment costs, and NPV of consumer benefits over the lifetime of walk-ins sold from 2027 through 2056.

DOE evaluates the impacts of new or amended standards by comparing a case without such standards with standards-case projections (''no-new-standards case''). The no-new-standards case characterizes energy use and consumer costs for each equipment class in the absence of new or amended energy conservation standards. For this projection, DOE considers historical trends in efficiency and various forces that are likely to affect the mix of efficiencies over time. DOE compares the no-new-standards case with projections characterizing the market for each equipment class if DOE adopted new or amended standards at specific energy efficiency levels for that class. For each efficiency level, DOE considers how a given standard would likely affect the market shares of equipment with efficiencies greater than the standard.

DOE uses a spreadsheet model to calculate the energy savings and the national consumer costs and savings from each efficiency level. Interested parties can review DOE's analyses by changing various input quantities within the spreadsheet. The NIA spreadsheet model uses typical values (as opposed to probability distributions) as inputs. Critical inputs to this analysis include shipments projections, estimated equipment lifetimes, equipment installed costs and operating costs, equipment annual energy consumption, the base case efficiency projection, and discount rates.

DOE estimates a combined total of 3.647 quads of FFC energy savings at the max-tech efficiency levels for walk-in doors, panels, and refrigeration systems may result if amended standards are implemented.

Chapter 10 of the preliminary TSD addresses the NIA.

IV. Public Participation

DOE invites public engagement in this process through participation in the webinar and submission of written comments and data. After the webinar and the closing of the comment period, DOE will consider all timely-submitted comments and additional information obtained from interested parties, as well as information obtained through further analyses. Following such consideration, the Department will publish either a determination that the standards for walk-ins need not be amended or a NOPR proposing to amend those standards. The NOPR, should one be issued, would include proposed energy conservation standards for the products covered by this rulemaking, and members of the public would be given an opportunity to submit written and oral comments on the proposed standards.

A. Participation in the Webinar

The time and date for the webinar meeting are listed in the **DATES** section at the beginning of this document. Webinar registration information, participant instructions, and information about the capabilities available to webinar participants will be published on DOE's website: *https://www.energy.gov/eere/buildings/public-meetings-and-comment-deadlines.* Participants are responsible for ensuring their systems are compatible with the webinar software.

B. Procedure for Submitting Prepared General Statements for Distribution

Any person who has an interest in the topics addressed in this document, or who is representative of a group or class of persons that has an interest in these issues, may request an opportunity to make an oral presentation at the webinar. Such persons may submit such request to *ApplianceStandardsQuestions@ee.doe.gov.* Persons who wish to speak should include with their request a computer file in WordPerfect, Microsoft Word, PDF, or text (ASCII) file format that briefly describes the nature of their interest in this rulemaking and the topics they wish to discuss. Such persons should also provide a daytime telephone number where they can be reached.

C. Conduct of the Webinar

DOE will designate a DOE official to preside at the webinar/public meeting and may also use a professional facilitator to aid discussion. The meeting will not be a judicial or evidentiary-type public hearing, but DOE will conduct it in accordance with section 336 of EPCA (42 U.S.C. 6306). A court reporter will be present to record the proceedings and prepare a transcript. DOE reserves the right to schedule the order of presentations and to establish the procedures governing the conduct of the webinar. There shall not be discussion of proprietary information, costs or prices, market share, or other commercial matters regulated by U.S. anti-trust laws. After the webinar and until the end of the comment period, interested parties may submit further comments on the proceedings and any aspect of the rulemaking.

The webinar will be conducted in an informal, conference style. DOE will present a general overview of the topics addressed in this document, allow time for prepared general statements by participants, and encourage all interested parties to share their views on issues affecting this document. Each participant will be allowed to make a general statement (within time limits determined by DOE), before the discussion of specific topics. DOE will permit, as time allows, other participants to comment briefly on any general statements. At the end of all prepared statements on a topic, DOE will permit participants to clarify their statements briefly. Participants should be prepared to answer questions by DOE and by other participants concerning these issues. DOE representatives may also ask questions of participants concerning other matters relevant to this rulemaking. The official conducting the webinar/public meeting will accept additional comments or questions from those attending, as time permits. The presiding official will announce any further procedural rules or modification of the above procedures that may be needed for the proper conduct of the webinar.

A transcript of the webinar will be included in the docket, which can be viewed as described in the *Docket* section at the beginning of this document. In addition, any person may buy a copy of the transcript from the transcribing reporter.

D. Submission of Comments

DOE will accept comments, data, and information regarding this proposed rule before or after the public meeting, but no later than the date provided in the **DATES** section at the beginning of this document. Interested parties may submit comments, data, and other information using any of the methods described in the **ADDRESSES** section at the beginning of this document.

Submitting comments via *https://www.regulations.gov.* The *https://www.regulations.gov* web page will require you to provide your name and contact information. Your contact information will be viewable to DOE Building Technologies staff only. Your

[8] The NIA accounts for impacts in the 50 states and U.S. territories.

contact information will not be publicly viewable except for your first and last names, organization name (if any), and submitter representative name (if any). If your comment is not processed properly because of technical difficulties, DOE will use this information to contact you. If DOE cannot read your comment due to technical difficulties and cannot contact you for clarification, DOE may not be able to consider your comment.

However, your contact information will be publicly viewable if you include it in the comment itself or in any documents attached to your comment. Any information that you do not want to be publicly viewable should not be included in your comment, nor in any document attached to your comment. Otherwise, persons viewing comments will see only first and last names, organization names, correspondence containing comments, and any documents submitted with the comments.

Do not submit to *https://www.regulations.gov* information for which disclosure is restricted by statute, such as trade secrets and commercial or financial information (hereinafter referred to as Confidential Business Information (''CBI'')). Comments submitted through *https://www.regulations.gov* cannot be claimed as CBI. Comments received through the website will waive any CBI claims for the information submitted. For information on submitting CBI, see the Confidential Business Information section.

DOE processes submissions made through *https://www.regulations.gov* before posting. Normally, comments will be posted within a few days of being submitted. However, if large volumes of comments are being processed simultaneously, your comment may not be viewable for up to several weeks. Please keep the comment tracking number that *https://www.regulations.gov* provides after you have successfully uploaded your comment.

Submitting comments via email, hand delivery/courier, or postal mail. Comments and documents submitted via email, hand delivery/courier, or postal mail also will be posted to *https://www.regulations.gov.* If you do not want your personal contact information to be publicly viewable, do not include it in your comment or any accompanying documents. Instead, provide your contact information in a cover letter. Include your first and last names, email address, telephone number, and optional mailing address. The cover letter will not be publicly viewable as long as it does not include any comments

Include contact information each time you submit comments, data, documents, and other information to DOE. If you submit via postal mail or hand delivery/courier, please provide all items on a CD, if feasible, in which case it is not necessary to submit printed copies. No telefacsimiles (''faxes'') will be accepted.

Comments, data, and other information submitted to DOE electronically should be provided in PDF (preferred), Microsoft Word or Excel, WordPerfect, or text (ASCII) file format. Provide documents that are not secured, that are written in English, and that are free of any defects or viruses. Documents should not contain special characters or any form of encryption and, if possible, they should carry the electronic signature of the author.

Campaign form letters. Please submit campaign form letters by the originating organization in batches of between 50 to 500 form letters per PDF or as one form letter with a list of supporters' names compiled into one or more PDFs. This reduces comment processing and posting time.

Confidential Business Information. Pursuant to 10 CFR 1004.11, any person submitting information that he or she believes to be confidential and exempt by law from public disclosure should submit via email two well-marked copies: one copy of the document marked ''confidential'' including all the information believed to be confidential, and one copy of the document marked ''non-confidential'' with the information believed to be confidential deleted. DOE will make its own determination about the confidential status of the information and treat it according to its determination.

It is DOE's policy that all comments may be included in the public docket, without change and as received, including any personal information provided in the comments (except information deemed to be exempt from public disclosure).

V. Approval of the Office of the Secretary

The Secretary of Energy has approved publication of this notification of the availability of the preliminary technical support document and request for comment.

Signing Authority

This document of the Department of Energy was signed on June 24, 2022, by Kelly J. Speakes-Backman, Principal Deputy Assistant Secretary for Energy Efficiency and Renewable Energy, pursuant to delegated authority from the Secretary of Energy. That document with the original signature and date is maintained by DOE. For administrative purposes only, and in compliance with requirements of the Office of the Federal Register, the undersigned DOE Federal Register Liaison Officer has been authorized to sign and submit the document in electronic format for publication, as an official document of the Department of Energy. This administrative process in no way alters the legal effect of this document upon publication in the **Federal Register**.

Signed in Washington, DC, on June 24, 2022.

Treena V. Garrett,

Federal Register Liaison Officer, U.S. Department of Energy.

[FR Doc. 2022–13957 Filed 6–29–22; 8:45 am]

BILLING CODE 6450–01–P

DEPARTMENT OF TRANSPORTATION

Federal Aviation Administration

14 CFR Part 39

[Docket No. FAA–2022–0807; Project Identifier AD–2022–00214–R]

RIN 2120–AA64

Airworthiness Directives; Bell Textron Canada Limited Helicopters

AGENCY: Federal Aviation Administration (FAA), DOT.

ACTION: Notice of proposed rulemaking (NPRM).

SUMMARY: The FAA proposes to supersede Airworthiness Directive (AD) 2021–26–08, which applies to certain Bell Textron Canada Limited Model 206, 206A, 206A–1, 206B, 206B–1, 206L, 206L–1, 206L–3, and 206L–4 helicopters. AD 2021–26–08 requires removing certain nuts from service; installing newly designed nuts; applying a specific torque, and a torque stripe to each newly installed nut; after the installation of each newly designed nut, inspecting the torque; and depending on the inspection results, either applying a torque stripe, or performing further inspections and removing certain parts from service. AD 2021–26–08 also prohibits installing any affected nut on any tail rotor drive shaft (TRDS) disc pack (Thomas) coupling. Since the FAA issued AD 2021–26–089, the FAA determined certain torque values and part numbers (P/Ns) need to be revised. This proposed AD would require removing certain nuts from service; installing newly designed nuts; applying torque and a torque stripe; and

additional corrective actions if necessary. This proposed AD would also prohibit installing any affected nut on any TRDS Thomas coupling, as specified in a Transport Canada AD, which is proposed for incorporation by reference (IBR). The FAA is proposing this AD to address the unsafe condition on these products.

DATES: The FAA must receive comments on this proposed AD by August 15, 2022.

ADDRESSES: You may send comments, using the procedures found in 14 CFR 11.43 and 11.45, by any of the following methods:

- *Federal eRulemaking Portal:* Go to *https://www.regulations.gov.* Follow the instructions for submitting comments.
- *Fax:* (202) 493–2251.
- *Mail:* U.S. Department of Transportation, Docket Operations, M–30, West Building Ground Floor, Room W12–140, 1200 New Jersey Avenue SE, Washington, DC 20590.
- *Hand Delivery:* Deliver to Mail address above between 9 a.m. and 5 p.m., Monday through Friday, except Federal holidays.

For Transport Canada material that is proposed for IBR in this NPRM, contact Transport Canada, Transport Canada National Aircraft Certification, 159 Cleopatra Drive, Nepean, Ontario, K1A 0N5, CANADA; telephone 888–663–3639; email *TC.AirworthinessDirectives-Consignesdenavigabilite.TC@tc.gc.ca*; internet *https://tc.canada.ca/en/aviation.* You may find the Transport Canada material on the Transport Canada website at *https://tc.canada.ca/en/aviation.* For Air Comm Corporation service information identified in this NPRM, contact Air Comm Corporation, 1575 West 124th Ave. #210, Westminster, CO 80234; telephone (303) 440–4075; email *service@aircommcorp.com*; or at *https://www.aircommcorp.com.* For Bell service information identified in this NPRM, contact Bell Textron Canada Limited, 12,800 Rue de l'Avenir, Mirabel, Quebec J7J 1R4, Canada; telephone 1–450–437–2862 or 1–800–363–8023; fax 1–450–433–0272; email *productsupport@bellflight.com*; or at *https://www.bellflight.com/support/contact-support.* You may view this material at the FAA, Office of the Regional Counsel, Southwest Region, 10101 Hillwood Pkwy., Room 6N–321, Fort Worth, TX 76177. For information on the availability of this material at the FAA, call (817) 222–5110. The Transport Canada material is also available at *https://www.regulations.gov* by searching for and locating Docket No. FAA–2022–0807.

Examining the AD Docket

You may examine the AD docket at *https://www.regulations.gov* by searching for and locating Docket No. FAA–2022–0807; or in person at Docket Operations between 9 a.m. and 5 p.m., Monday through Friday, except Federal holidays. The AD docket contains this NPRM, the Transport Canada AD, any comments received, and other information. The street address for Docket Operations is listed above.

FOR FURTHER INFORMATION CONTACT: Matt Fuller, AD Program Manager, General Aviation & Rotorcraft Unit, Airworthiness Products Section, Operational Safety Branch, FAA, 10101 Hillwood Pkwy., Fort Worth, TX 76177; telephone (817) 222–5110; email *matthew.fuller@faa.gov.*

SUPPLEMENTARY INFORMATION:

Comments Invited

The FAA invites you to send any written relevant data, views, or arguments about this proposal. Send your comments to an address listed under **ADDRESSES**. Include ''Docket No. FAA–2022–0807; Project Identifier AD–2022–00214–R'' at the beginning of your comments. The most helpful comments reference a specific portion of the proposal, explain the reason for any recommended change, and include supporting data. The FAA will consider all comments received by the closing date and may amend this proposal because of those comments.

Except for Confidential Business Information (CBI) as described in the following paragraph, and other information as described in 14 CFR 11.35, the FAA will post all comments received, without change, to *https://www.regulations.gov,* including any personal information you provide. The agency will also post a report summarizing each substantive verbal contact received about this NPRM.

Confidential Business Information

CBI is commercial or financial information that is both customarily and actually treated as private by its owner. Under the Freedom of Information Act (FOIA) (5 U.S.C. 552), CBI is exempt from public disclosure. If your comments responsive to this NPRM contain commercial or financial information that is customarily treated as private, that you actually treat as private, and that is relevant or responsive to this NPRM, it is important that you clearly designate the submitted comments as CBI. Please mark each page of your submission containing CBI as ''PROPIN.'' The FAA will treat such marked submissions as confidential under the FOIA, and they will not be placed in the public docket of this NPRM. Submissions containing CBI should be sent to Matt Fuller, AD Program Manager, General Aviation & Rotorcraft Unit, Airworthiness Products Section, Operational Safety Branch, FAA, 10101 Hillwood Pkwy., Fort Worth, TX 76177; telephone (817) 222–5110; email *matthew.fuller@faa.gov.* Any commentary that the FAA receives that is not specifically designated as CBI will be placed in the public docket for this rulemaking.

Background

The FAA issued AD 2021–26–08, Amendment 39–21867 (86 FR 72833, December 23, 2021) (AD 2021–26–08) for Bell Textron Canada Limited Model 206, 206A, 206A–1, 206B, 206B–1, 206L, 206L–1, 206L–3, and 206L–4 helicopters, with nut P/N MS21042L4 or P/N MS21042L5 installed on the TRDS Thomas couplings. AD 2021–26–08 requires removing certain nuts from service, installing newly designed nuts, and applying a specific torque and a torque stripe to each newly installed nut. AD 2021–26–08 also requires, after the installation of each newly designed nut, inspecting the torque and, depending on the inspection results, either applying a torque stripe or performing further inspections and removing certain parts from service. Finally, AD 2021–26–08 prohibits installing any affected nut on any TRDS Thomas coupling. The FAA issued AD 2021–26–08 to prevent failure or loss of a nut on any TRDS Thomas coupling.

AD 2021–26–08 was prompted by Transport Canada AD CF–2020–15, dated May 13, 2020 (Transport Canada AD CF–2020–15). Transport Canada, which is the aviation authority for Canada, issued Transport Canada AD CF–2020–15 to correct an unsafe condition for Bell Textron Canada Limited Model 206, 206A, 206A–1, 206B, 206B–1, 206L, 206L–1, 206L–3, and 206L–4 helicopters, all serial numbers. Transport Canada AD CF–2020–15 specifies for certain model helicopters, newly designed nuts cannot be installed because Supplemental Type Certificate (STC) SH2750NM and Transport Canada STC SH99–202 install a pulley at the Thomas coupling location causing insufficient clearance. Transport Canada advises, for certain model helicopters with STC SH2750NM or Transport Canada STC SH99–202 installed, different part-numbered nuts may be installed and are now required to be replaced with a new part-numbered nut that is not vulnerable to the unsafe condition.

Actions Since AD 2021–26–08 Was Issued

Since the FAA issued AD 2021–26–08, the FAA determined that certain P/Ns and certain torque values in paragraph (g) of AD 2021–26–08 need to be revised. The FAA advises that the 50–70 in lb torque values are only applicable to certain bolts and nuts, and a 150–180 in lb torque value is required for other bolts and nuts that are required to be installed by this proposed AD. The FAA also advises that certain part-numbered nuts that are required to be installed according to AD 2021–26–08 need to be removed from service and replaced due to a certain pulley configuration.

This proposed AD was prompted by reports of cracked or missing nuts installed on the TRDS Thomas couplings. The FAA is proposing this AD to prevent failure or loss of a nut on the TRDS Thomas couplings, which if not addressed could result in loss of the tail rotor and subsequent loss of control of the helicopter. See Transport Canada AD CF–2020–15 for additional background information.

Related Service Information Under 1 CFR Part 51

Transport Canada AD CF–2020–15 requires the replacement of certain part-numbered nuts with newly designed nuts at each TRDS Thomas coupling and prohibits installing any affected nut on any TRDS Thomas coupling. The replacement includes applying torque, and a torque stripe.

The FAA reviewed Air Comm Corporation Service Bulletin SB 206EC–092619, Revision NC, dated September 26, 2019, which also specifies procedures for replacing the affected nuts with the newly designed corrosion-resistant nuts, but explains that affected helicopters equipped with Air Comm Corporation air conditioning systems installed under STC SH2750NM use the affected nut to attach a pulley onto the TRDS, which causes clearance issues for the nuts to be installed at the coupling. Therefore, this service bulletin specifies replacing the nut with a lower profile nut.

This material is reasonably available because the interested parties have access to it through their normal course of business or by the means identified in the **ADDRESSES** section.

Other Related Service Information

The FAA also reviewed Bell Alert Service Bulletin (ASB) 206–19–136, dated August 27, 2019, for FAA-certificated Model 206, 206A-series, and 206B-series helicopters, and non FAA-certificated Model TH–67 helicopters; and Bell ASB 206L–19–181, dated August 27, 2019, and Revision A, dated August 29, 2019, for Model 206L, 206L–1, 206L–3, and 206L–4 helicopters. This service information specifies procedures for replacing the affected nuts with the newly designed corrosion-resistant nuts. Revision A of Bell ASB 206L–19–181 corrects a typographical error.

Additionally, the FAA reviewed Bell Service Instruction BHT–206–SI–2052, Revision 1, dated October 14, 2010. This service information specifies procedures to upgrade Model 206L–1 and 206L–3 helicopters to allow operations at an increased internal gross weight.

Differences Between This Proposed AD and Transport Canada AD CF–2020–15

Transport Canada AD CF–2020–15 requires compliance with certain actions within 600 hours air time or within the next 24 months, whichever occurs first, whereas this proposed AD would require compliance within 600 hours time-in-service only. Service information referenced in Transport Canada AD CF–2020–15 specifies if any P/N MS21042L4 nuts are found loose or damaged, reporting the location and providing the information to Bell, whereas this proposed AD would require if any P/N MS21042L4 nuts are found loose or damaged, inspecting each TRDS Thomas coupling, including each bolt, nut, and washer, for any elongated holes, fretting on the fasteners, and damaged fasteners, and depending on the results of the inspection, removing from service each affected part and replacing it with an airworthy part.

FAA's Determination

These helicopters have been approved by the aviation authority of Canada and are approved for operation in the United States. Pursuant to the FAA's bilateral agreement with Canada, Transport Canada, its technical representative, has notified the FAA of the unsafe condition described in its AD. The FAA is proposing this AD after evaluating all known relevant information and determining that the unsafe condition described previously is likely to exist or develop on other helicopters of these same type designs.

Proposed AD Requirements in This NPRM

This proposed AD would require accomplishing the actions specified in Transport Canada AD CF–2020–15, described previously, as incorporated by reference, except for any differences identified as exceptions in the regulatory text of this proposed AD and except as discussed under ''Differences Between this Proposed AD and Transport Canada AD CF–2020–15.''

Explanation of Required Compliance Information

In the FAA's ongoing efforts to improve the efficiency of the AD process, the FAA developed a process to use some civil aviation authority (CAA) ADs as the primary source of information for compliance with requirements for corresponding FAA ADs. The FAA has been coordinating this process with manufacturers and CAAs. As a result, the FAA proposes to incorporate Transport Canada AD CF–2020–15 by reference in the FAA final rule. This proposed AD would, therefore, require compliance with Transport Canada AD CF–2020–15 in its entirety through that incorporation, except for any differences identified as exceptions in the regulatory text of this proposed AD. Using common terms that are the same as the heading of a particular section in Transport Canada AD CF–2020–15 does not mean that operators need comply only with that section. For example, where the AD requirement refers to ''corrective actions,'' compliance with this AD requirement is not limited to the section titled ''Corrective Actions'' in Transport Canada AD CF–2020–15. Service information referenced in Transport Canada AD CF–2020–15 for compliance will be available at *https://www.regulations.gov* by searching for and locating Docket No. FAA–2022–0807 after the FAA final rule is published.

Costs of Compliance

The FAA estimates that this AD, if adopted as proposed, would affect 1,359 helicopters of U.S. Registry. Labor rates are estimated at $85 per work-hour. Based on these numbers, the FAA estimates the following costs to comply with this proposed AD.

Replacing each affected nut with the newly designed nut and applying torque and a torque stripe would take about 4 work-hours, and parts would cost about $75 for an estimated cost of $415 per nut replacement and $563,985 per nut replacement for the U.S. fleet.

In addition, the costs of the actions that are part of the required replacement are as follows:

If required due to loose or damaged nuts found, inspecting each TRDS Thomas coupling, and each bolt, nut, and washer for elongated holes and fretting on the fasteners would take about 0.5 work-hour for an estimated cost of $43 per inspection.

If required, replacing each TRDS Thomas coupling would take about 4 work-hours, and parts would cost about $4,000 for an estimated cost of $4,340 per TRDS Thomas coupling replacement.

If required, replacing a bolt or washer would take a minimal amount of time and parts would cost a nominal amount.

Authority for This Rulemaking

Title 49 of the United States Code specifies the FAA's authority to issue rules on aviation safety. Subtitle I, section 106, describes the authority of the FAA Administrator. Subtitle VII: Aviation Programs, describes in more detail the scope of the Agency's authority.

The FAA is issuing this rulemaking under the authority described in Subtitle VII, Part A, Subpart III, Section 44701: General requirements. Under that section, Congress charges the FAA with promoting safe flight of civil aircraft in air commerce by prescribing regulations for practices, methods, and procedures the Administrator finds necessary for safety in air commerce. This regulation is within the scope of that authority because it addresses an unsafe condition that is likely to exist or develop on products identified in this rulemaking action.

Regulatory Findings

The FAA determined that this proposed AD would not have federalism implications under Executive Order 13132. This proposed AD would not have a substantial direct effect on the States, on the relationship between the national Government and the States, or on the distribution of power and responsibilities among the various levels of government.

For the reasons discussed above, I certify this proposed regulation:

(1) Is not a ''significant regulatory action'' under Executive Order 12866,

(2) Would not affect intrastate aviation in Alaska, and

(3) Would not have a significant economic impact, positive or negative, on a substantial number of small entities under the criteria of the Regulatory Flexibility Act.

List of Subjects in 14 CFR Part 39

Air transportation, Aircraft, Aviation safety, Incorporation by reference, Safety.

The Proposed Amendment

Accordingly, under the authority delegated to me by the Administrator, the FAA proposes to amend 14 CFR part 39 as follows:

PART 39—AIRWORTHINESS DIRECTIVES

■ 1. The authority citation for part 39 continues to read as follows:

Authority: 49 U.S.C. 106(g), 40113, 44701.

§ 39.13 [Amended]

■ 2. The FAA amends § 39.13 by:

■ a. Removing Airworthiness Directive 2021–26–08, Amendment 39–21867 (86 FR 72833, December 23, 2021); and

■ b. Adding the following new airworthiness directive:

Bell Textron Canada Limited: Docket No. FAA–2022–0807; Project Identifier AD–2022–00214–R.

(a) Comments Due Date

The FAA must receive comments on this airworthiness directive (AD) by August 15, 2022.

(b) Affected ADs

This AD replaces AD 2021–26–08, Amendment 39–21867 (86 FR 72833, December 23, 2021) (AD 2021–26–08).

(c) Applicability

This AD applies to Bell Textron Canada Limited Model 206, 206A, 206A–1, 206B, 206B–1, 206L, 206L–1, 206L–3, and 206L–4 helicopters, all serial numbers, certificated in any category.

Note 1 to paragraph (c): Helicopters with an OH–58A designation are Model 206A–1 helicopters.

(d) Subject

Joint Aircraft Service Component (JASC) Code: 6510, Tail Rotor Drive Shaft.

(e) Unsafe Condition

This AD was prompted by reports of cracked or missing nuts installed on the tail rotor drive shaft (TRDS) disc pack (Thomas) couplings. The FAA is issuing this AD to prevent failure or loss of a nut on the TRDS Thomas couplings. The unsafe condition, if not addressed, could result in loss of the tail rotor and subsequent loss of control of the helicopter.

(f) Compliance

Comply with this AD within the compliance times specified, unless already done.

(g) Requirements

Except as specified in paragraphs (h) and (i) of this AD: Comply with all required actions and compliance times specified in, and in accordance with, Transport Canada AD CF–2020–15, dated May 13, 2020 (Transport Canada AD CF–2020–15).

(h) Exceptions to Transport Canada AD CF–2020–15

(1) Where Transport Canada AD CF–2020–15 requires compliance in terms of air time, this AD requires using hours time-in-service (TIS).

(2) Where Transport Canada AD CF–2020–15 refers to the effective dates specified in paragraphs (h)(2)(i) and (ii) of this AD, this AD requires using the effective date of this AD.

(i) October 9, 2019 (the effective date of Transport Canada AD CF–2019–34, dated September 25, 2019).

(ii) The effective date of Transport Canada AD CF–2020–15.

(3) Where Transport Canada AD CF–2020–15 defines Group 1 helicopters as those models ''that have not been modified by installing STC SH2750NM or STC SH99–202,'' replace ''that have not been modified by installing STC SH2750NM or STC SH99–202'' with ''that have not been modified by installing STC SH2750NM.''

(4) Where Transport Canada AD CF–2020–15 defines Group 4 helicopters as those models ''that have been modified by installing STC SH2750NM or STC SH99–202,'' replace ''that have been modified by installing STC SH2750NM or STC SH99–202'' with ''that have been modified by installing STC SH2750NM.''

(5) Where Transport Canada AD CF–2020–15 requires compliance within 600 hours air time or 24 months, whichever occurs first, this AD requires compliance within 600 hours TIS only and does not allow a compliance time of 24 months.

(6) Where any paragraph of Transport Canada AD CF–2020–15 specifies to replace part number (P/N) MS21042 nuts with P/N NAS9926 nuts, this AD requires removing P/N MS21042 nuts from service and replacing with P/N NAS9926 nuts.

(7) Where any paragraph of any service information referenced in Transport Canada AD CF–2020–15 specifies to replace P/N MS21042L4 nuts with P/N 90–132L4 nuts, this AD requires removing P/N MS21042L4 nuts from service and replacing with P/N 90–132L4 nuts, in accordance with Air Comm Corporation Service Bulletin SB 206EC–092619, Revision NC, dated September 26, 2019 (SB 206EC–092619 Rev NC).

(8) Where any paragraph of any service information referenced in Transport Canada AD CF–2020–15 specifies to replace P/N MS21042L5 nuts with P/N 90–132L5 nuts, this AD requires removing P/N MS21042L5 nuts from service and replacing with P/N 90–132L5 nuts, in accordance with SB 206EC–092619 Rev NC.

(9) Where any paragraph of any service information referenced in Transport Canada AD CF–2020–15 specifies if any P/N MS21042L4 nuts are found loose or damaged, report at which location and provide the information to Product Support Engineering at *productsupport@bellflight.com,* this AD requires if any P/N MS21042L4 nuts are found loose or damaged, before further flight, inspecting each TRDS Thomas coupling, including each bolt, nut, and washer, for any elongated holes, fretting on the fasteners, and damaged fasteners. If there is any elongated hole, fretting on the fasteners, or damaged fasteners, this AD requires before further flight, removing from service each affected part and replacing it with an airworthy part.

(i) No Reporting Requirement

Although the service information referenced in Transport Canada AD CF–2020–15 specifies to submit certain information to the manufacturer, this AD does not include that requirement.

(j) Alternative Methods of Compliance (AMOCs)

(1) The Manager, International Validation Branch, FAA, has the authority to approve AMOCs for this AD, if requested using the procedures found in 14 CFR 39.19. In accordance with 14 CFR 39.19, send your request to your principal inspector or local Flight Standards District Office, as appropriate. If sending information directly to the manager of the International Validation Branch, send it to the attention of the person identified in paragraph (k)(2) of this AD. Information may be emailed to: *9-AVS-AIR-730-AMOC@faa.gov.*

(2) Before using any approved AMOC, notify your appropriate principal inspector, or lacking a principal inspector, the manager of the local flight standards district office/certificate holding district office.

(k) Related Information

(1) For Transport Canada AD CF–2020–15, contact Transport Canada, Transport Canada National Aircraft Certification, 159 Cleopatra Drive, Nepean, Ontario, K1A 0N5, CANADA; telephone 888–663–3639; email *TC.AirworthinessDirectives-Consignesdenavigabilite.TC@tc.gc.ca*; internet *https://tc.canada.ca/en/aviation.* You may find the Transport Canada material on the Transport Canada website at *https://tc.canada.ca/en/aviation.* You may view this material at the FAA, Office of the Regional Counsel, Southwest Region, 10101 Hillwood Pkwy., Room 6N–321, Fort Worth, TX 76177. For information on the availability of this material at the FAA, call (817) 222–5110. This material may be found in the AD docket at *https://www.regulations.gov* by searching for and locating Docket No. FAA–2022–0807.

(2) For more information about this AD, contact Matt Fuller, AD Program Manager, General Aviation & Rotorcraft Unit, Airworthiness Products Section, Operational Safety Branch, FAA, 10101 Hillwood Pkwy., Fort Worth, TX 76177; telephone (817) 222–5110; email *matthew.fuller@faa.gov.*

(3) For Air Comm Corporation service information identified in this AD, contact Air Comm Corporation, 1575 West 124th Ave. #210, Westminster, CO 80234; telephone (303) 440–4075; email *service@aircommcorp.com*; or at *https://www.aircommcorp.com.* You may view this material at the FAA, Office of the Regional Counsel, Southwest Region, 10101 Hillwood Pkwy., Room 6N 321, Fort Worth, TX 76177. For information on the availability of this material at the FAA, call (817) 222–5110.

Issued on June 23, 2022.

Ross Landes,

Deputy Director for Regulatory Operations, Compliance & Airworthiness Division, Aircraft Certification Service.

[FR Doc. 2022–13858 Filed 6–29–22; 8:45 am]

BILLING CODE 4910–13–P

DEPARTMENT OF TRANSPORTATION

Federal Aviation Administration

14 CFR Part 39

[Docket No. FAA–2022–0805; Project Identifier MCAI–2021–00951–R]

RIN 2120–AA64

Airworthiness Directives; Airbus Helicopters

AGENCY: Federal Aviation Administration (FAA), DOT.

ACTION: Notice of proposed rulemaking (NPRM).

SUMMARY: The FAA proposes to adopt a new airworthiness directive (AD) for all Airbus Helicopters Model AS355E, AS355F, AS355F1, AS355F2, AS355N, and AS355NP helicopters. This proposed AD was prompted by the identification of certain parts needing maintenance actions, including life limits and maintenance tasks. This proposed AD would require incorporating into maintenance records requirements (airworthiness limitations), as specified in a European Union Aviation Safety Agency (EASA) AD, which is proposed for incorporation by reference (IBR). The FAA is proposing this AD to address the unsafe condition on these products.

DATES: The FAA must receive comments on this proposed AD by August 15, 2022.

ADDRESSES: You may send comments, using the procedures found in 14 CFR 11.43 and 11.45, by any of the following methods:

- *Federal eRulemaking Portal:* Go to *https://www.regulations.gov.* Follow the instructions for submitting comments.
- *Fax:* (202) 493–2251.
- *Mail:* U.S. Department of Transportation, Docket Operations, M–30, West Building Ground Floor, Room W12–140, 1200 New Jersey Avenue SE, Washington, DC 20590.
- *Hand Delivery:* Deliver to Mail address above between 9 a.m. and 5 p.m., Monday through Friday, except Federal holidays.

For EASA material that is proposed for IBR in this NPRM, contact EASA, Konrad-Adenauer-Ufer 3, 50668 Cologne, Germany; telephone +49 221 8999 000; email *ADs@easa.europa.eu*; internet *www.easa.europa.eu.* You may find the EASA material on the EASA website at *https://ad.easa.europa.eu.* For Airbus Helicopters service information identified in this NPRM, contact Airbus Helicopters, 2701 North Forum Drive, Grand Prairie, TX 75052; telephone (972) 641–0000 or (800) 232–0323; fax (972) 641–3775; or at *https://www.airbus.com/helicopters/services/technical-support.html.* You may view this material at the FAA, Office of the Regional Counsel, Southwest Region, 10101 Hillwood Pkwy., Room 6N–321, Fort Worth, TX 76177. For information on the availability of this material at the FAA, call (817) 222–5110. The EASA material is also available at *https://www.regulations.gov* by searching for and locating Docket No. FAA–2022–0805.

Examining the AD Docket

You may examine the AD docket at *https://www.regulations.gov* by searching for and locating Docket No. FAA–2022–0805; or in person at Docket Operations between 9 a.m. and 5 p.m., Monday through Friday, except Federal holidays. The AD docket contains this NPRM, the EASA AD, any comments received, and other information. The street address for Docket Operations is listed above.

FOR FURTHER INFORMATION CONTACT: Kristi Bradley, Program Manager, COS Program Management Section, Operational Safety Branch, Compliance & Airworthiness Division, FAA, 10101 Hillwood Parkway, Fort Worth, TX 76177; telephone (817) 222–5110; email *kristin.bradley@faa.gov.*

SUPPLEMENTARY INFORMATION:

Comments Invited

The FAA invites you to send any written relevant data, views, or arguments about this proposal. Send your comments to an address listed under **ADDRESSES**. Include ''Docket No. FAA–2022–0805; Project Identifier MCAI–2021–00951–R'' at the beginning of your comments. The most helpful comments reference a specific portion of the proposal, explain the reason for any recommended change, and include supporting data. The FAA will consider all comments received by the closing date and may amend this proposal because of those comments.

Except for Confidential Business Information (CBI) as described in the following paragraph, and other information as described in 14 CFR 11.35, the FAA will post all comments received, without change, to *https://www.regulations.gov,* including any personal information you provide. The agency will also post a report summarizing each substantive verbal contact received about this NPRM.

Confidential Business Information

CBI is commercial or financial information that is both customarily and actually treated as private by its owner. Under the Freedom of Information Act

(FOIA) (5 U.S.C. 552), CBI is exempt from public disclosure. If your comments responsive to this NPRM contain commercial or financial information that is customarily treated as private, that you actually treat as private, and that is relevant or responsive to this NPRM, it is important that you clearly designate the submitted comments as CBI. Please mark each page of your submission containing CBI as ''PROPIN.'' The FAA will treat such marked submissions as confidential under the FOIA, and they will not be placed in the public docket of this NPRM. Submissions containing CBI should be sent to Kristi Bradley, Program Manager, COS Program Management Section, Operational Safety Branch, Compliance & Airworthiness Division, FAA, 10101 Hillwood Parkway, Fort Worth, TX 76177; telephone (817) 222–5110; email *kristin.bradley@faa.gov.* Any commentary that the FAA receives that is not specifically designated as CBI will be placed in the public docket for this rulemaking.

Background

EASA, which is the Technical Agent for the Member States of the European Union, has issued EASA AD 2021–0193, dated August 20, 2021 (EASA AD 2021–0193) to correct an unsafe condition for Airbus Helicopters (AH), formerly Eurocopter, Eurocopter France, and Aerospatiale, Model AS 355 E, AS 355 F, AS 355 F1, AS 355 F2, AS 355 N, and AS 355 NP helicopters, all serial numbers. EASA AD 2021–0193 requires accomplishment of the actions in the applicable Airworthiness Limitations Section (ALS) as defined in EASA AD 2021–0193.

This proposed AD was prompted by the identification of certain parts needing maintenance actions, including life limits and maintenance tasks. The FAA is proposing this AD to address the failure of certain parts, which could result in the loss of control of the helicopter. See EASA AD 2021–0193 for additional background information.

Relationship Between Proposed AD and Other Relevant Rulemaking

EASA AD 2021–0193 also states that it takes over the requirements for Model AS 355 helicopters from EASA AD 2010–0006, dated January 7, 2010 (EASA AD 2010–0006) (which prompted FAA AD 2011–22–05 R1, Amendment 39–17765 (79 FR 14169, March 13, 2014) (AD 2011–22–05 R1)) and EASA AD 2015–0094, dated May 29, 2015 (EASA AD 2015–0094) (which prompted FAA AD 2016–25–20, Amendment 39–18746 (81 FR 94954, December 27, 2016) (AD 2016–25–20)). EASA AD 2021–0193 notes that the requirements of EASA AD 2010–0006 and EASA AD 2015–0094 have been incorporated into the applicable ALS specified in EASA AD 2021–0193.

Accordingly, this NPRM would not propose to supersede AD 2011–22–05 R1, or AD 2016–25–20. Rather, the FAA has determined that a stand-alone AD would be more appropriate to address the changes in EASA AD 2021–0193. Therefore, this proposed AD would require incorporating into maintenance records requirements (airworthiness limitations), as specified in the applicable ALS, as defined in EASA AD 2021–0193. Accomplishment of the proposed actions would then terminate all of the requirements of AD 2011–22–05 R1 and AD 2016–25–20 for Model AS355E, AS355F, AS355F1, AS355F2, AS355N, and AS355NP helicopters only.

Related Service Information Under 1 CFR Part 51

EASA AD 2021–0193 requires certain actions and associated thresholds and intervals, including life limits and maintenance tasks.

This material is reasonably available because the interested parties have access to it through their normal course of business or by the means identified in the **ADDRESSES** section.

Other Related Service Information

The FAA reviewed Airbus Helicopters AS 355 E Chapter 04 ALS Revision 010, dated September 14, 2020; Airbus Helicopters AS 355 F Chapter 04 ALS Revision 010, dated September 14, 2020; Airbus Helicopters AS 355 F1 Chapter 04 ALS Revision 010, dated September 14, 2020; Airbus Helicopters AS 355 F2 Chapter 04 ALS Revision 011, dated September 14, 2020; Airbus Helicopters AS 355 N Chapter 04 ALS, Revision 010, dated September 14, 2020; and Airbus Helicopters AS 355 NP Chapter 04 ALS Revision 009, dated February 4, 2019. This service information specifies procedures for mandatory actions for continued airworthiness.

FAA's Determination

These helicopters have been approved by EASA and are approved for operation in the United States. Pursuant to the FAA's bilateral agreement with the European Union, EASA has notified the FAA about the unsafe condition described in its AD. The FAA is proposing this AD after evaluating all known relevant information and determining that the unsafe condition described previously is likely to exist or develop on other helicopters of these same type designs.

Proposed AD Requirements in This NPRM

This proposed AD would require incorporating into maintenance records requirements (airworthiness limitations), which are specified in EASA AD 2021–0193 described previously, except as discussed under ''Differences Between this Proposed AD and EASA AD 2021–0193.''

ADs Mandating Airworthiness Limitations

The FAA has previously mandated airworthiness limitations by mandating each airworthiness limitation task (*e.g.,* inspections and replacements (life limits)) as an AD requirement or issuing ADs that require revising the ALS of the existing maintenance manual or instructions for continued airworthiness to incorporate new or revised inspections and life limits. This proposed AD, however, would require operators to incorporate into maintenance records required by 14 CFR 91.417(a)(2) or 135.439(a)(2), as applicable for your rotorcraft, the requirements (airworthiness limitations) specified in EASA AD 2021–0193. The FAA does not intend this as a substantive change. For these ADs, the ALS requirements for operators are the same but are complied with differently. Requiring the incorporation of the new ALS requirements into the maintenance records, rather than requiring individual ALS tasks (*e.g.,* repetitive inspections and replacements), requires operators to record AD compliance once after updating the maintenance records, rather than after every time the ALS task is completed.

In addition, paragraph (h) of the proposed AD allows operators to incorporate later approved revisions of the ALS document as specified in the provisions of the ''Ref. Publications'' section of EASA AD 2021–0193 without the need for an alternative method of compliance (AMOC).

Explanation of Required Compliance Information

In the FAA's ongoing efforts to improve the efficiency of the AD process, the FAA developed a process to use some civil aviation authority (CAA) ADs as the primary source of information for compliance with requirements for corresponding FAA ADs. The FAA has been coordinating this process with manufacturers and CAAs. As a result, the FAA proposes to incorporate EASA AD 2021–0193 by reference in the FAA final rule. Service

information referenced in EASA AD 2021–0193 for compliance will be available at *https://www.regulations.gov* by searching for and locating Docket No. FAA–2022–0805 after the FAA final rule is published.

Differences Between This Proposed AD and EASA AD 2021–0193

Paragraph (1) of EASA AD 2021–0193 requires compliance with actions and associated thresholds and intervals, including life limits and maintenance tasks, from the effective date of EASA AD 2021–0193. Paragraph (3) of EASA AD 2021–0193 requires incorporating the actions and associated thresholds and intervals, including life limits and maintenance tasks, into the approved maintenance program within 12 months after the effective date of EASA AD 2021–0193. This proposed AD would require incorporating into maintenance records requirements (airworthiness limitations) within 30 days after the effective date of this AD.

Costs of Compliance

The FAA estimates that this AD, if adopted as proposed, would affect 45 helicopters of U.S. Registry. Labor rates are estimated at $85 per work-hour. Based on these numbers, the FAA estimates the following costs to comply with this proposed AD.

Incorporating into maintenance records, requirements (airworthiness limitations) would require about 2 work-hours for an estimated cost of $170 per helicopter and $7,650 for the U.S. fleet.

Authority for This Rulemaking

Title 49 of the United States Code specifies the FAA's authority to issue rules on aviation safety. Subtitle I, section 106, describes the authority of the FAA Administrator. Subtitle VII: Aviation Programs, describes in more detail the scope of the Agency's authority.

The FAA is issuing this rulemaking under the authority described in Subtitle VII, Part A, Subpart III, Section 44701: General requirements. Under that section, Congress charges the FAA with promoting safe flight of civil aircraft in air commerce by prescribing regulations for practices, methods, and procedures the Administrator finds necessary for safety in air commerce. This regulation is within the scope of that authority because it addresses an unsafe condition that is likely to exist or develop on products identified in this rulemaking action.

Regulatory Findings

The FAA determined that this proposed AD would not have federalism implications under Executive Order 13132. This proposed AD would not have a substantial direct effect on the States, on the relationship between the national Government and the States, or on the distribution of power and responsibilities among the various levels of government.

For the reasons discussed above, I certify this proposed regulation:

(1) Is not a ''significant regulatory action'' under Executive Order 12866,

(2) Would not affect intrastate aviation in Alaska, and

(3) Would not have a significant economic impact, positive or negative, on a substantial number of small entities under the criteria of the Regulatory Flexibility Act.

List of Subjects in 14 CFR Part 39

Air transportation, Aircraft, Aviation safety, Incorporation by reference, Safety.

The Proposed Amendment

Accordingly, under the authority delegated to me by the Administrator, the FAA proposes to amend 14 CFR part 39 as follows:

PART 39—AIRWORTHINESS DIRECTIVES

■ 1. The authority citation for part 39 continues to read as follows:

Authority: 49 U.S.C. 106(g), 40113, 44701.

§ 39.13 [Amended]

■ 2. The FAA amends § 39.13 by adding the following new airworthiness directive:

Airbus Helicopters: Docket No. FAA–2022–0805; Project Identifier MCAI–2021–00951–R.

(a) Comments Due Date

The FAA must receive comments on this airworthiness directive (AD) by August 15, 2022.

(b) Affected ADs

This AD affects AD 2011–22–05 R1, Amendment 39–17765 (79 FR 14169, March 13, 2014) (AD 2011–22–05 R1); and AD 2016–25–20, Amendment 39–18746 (81 FR 94954, December 27, 2016) (AD 2016–25–20).

(c) Applicability

This AD applies to all Airbus Helicopters Model AS355E, AS355F, AS355F1, AS355F2, AS355N, and AS355NP helicopters, certificated in any category.

(d) Subject

Joint Aircraft Service Component (JASC) Code: 6410, Tail Rotor Blades.

(e) Unsafe Condition

This AD was prompted by the identification of certain parts needing maintenance actions, including life limits and maintenance tasks. The FAA is issuing this AD to address the failure of certain parts, which could result in the loss of control of the helicopter.

(f) Compliance

Comply with this AD within the compliance times specified, unless already done.

(g) Required Action

Within 30 days after the effective date of this AD, incorporate into maintenance records required by 14 CFR 91.417(a)(2) or 135.439(a)(2), as applicable for your rotorcraft, the requirements (airworthiness limitations) specified in paragraph (1) of European Union Aviation Safety Agency (EASA) AD 2021–0193, dated August 20, 2021 (EASA AD 2021–0193).

(h) Provisions for Alternative Requirements (Airworthiness Limitations)

After the actions required by paragraph (g) of this AD have been done, no alternative requirements (airworthiness limitations) are allowed unless they are approved as specified in the provisions of the ''Ref. Publications'' section of EASA AD 2021–0193.

(i) Terminating Action for ADs 2011–22–05 R1 and 2016–25–20

(1) Accomplishing the actions required by this AD terminates all requirements of AD 2011–22–05 R1 for Model AS355E, AS355F, AS355F1, AS355F2, AS355N, and AS355NP helicopters only.

(2) Accomplishing the actions required by this AD terminates all requirements of AD 2016–25–20 for Model AS355E, AS355F, AS355F1, AS355F2, AS355N, and AS355NP helicopters only.

(j) Special Flight Permit

Special flight permits in accordance with 14 CFR 21.197 and 21.199, are prohibited.

(k) Alternative Methods of Compliance (AMOCs)

(1) The Manager, International Validation Branch, FAA, has the authority to approve AMOCs for this AD, if requested using the procedures found in 14 CFR 39.19. In accordance with 14 CFR 39.19, send your request to your principal inspector or local Flight Standards District Office, as appropriate. If sending information directly to the manager of the International Validation Branch, send it to the attention of the person identified in paragraph (l)(1) of this AD. Information may be emailed to: *9-AVS-AIR-730-AMOC@faa.gov*.

(2) Before using any approved AMOC, notify your appropriate principal inspector, or lacking a principal inspector, the manager of the local flight standards district office/certificate holding district office.

(l) Related Information

(1) For more information about this AD, contact Kristi Bradley, Program Manager, COS Program Management Section,

Operational Safety Branch, Compliance & Airworthiness Division, FAA, 10101 Hillwood Parkway, Fort Worth, TX 76177; telephone (817) 222–5110; email *kristin.bradley@faa.gov*

(2) For EASA AD 2021–0193, contact EASA, Konrad-Adenauer-Ufer 3, 50668 Cologne, Germany; telephone +49 221 8999 000; email *ADs@easa.europa.eu*; internet *www.easa.europa.eu.* You may find the EASA material on the EASA website at *https://ad.easa.europa.eu.* You may view this material at the FAA, Office of the Regional Counsel, Southwest Region, 10101 Hillwood Pkwy., Room 6N–321, Fort Worth, TX 76177. For information on the availability of this material at the FAA, call (817) 222–5110. This material may be found in the AD docket at *https://www.regulations.gov* by searching for and locating Docket No. FAA–2022–0805.

Issued on June 23, 2022.

Ross Landes,

Deputy Director for Regulatory Operations, Compliance & Airworthiness Division, Aircraft Certification Service.

[FR Doc. 2022–13863 Filed 6–29–22; 8:45 am]

BILLING CODE 4910–13–P

DEPARTMENT OF TRANSPORTATION

Federal Aviation Administration

14 CFR Part 71

[Docket No. FAA–2022–0793; Airspace Docket No. 21–AWP–59]

RIN 2120–AA66

Proposed Amendment of Class D and Class E Airspace; Grand Canyon National Park Airport, AZ

AGENCY: Federal Aviation Administration (FAA), Department of Transportation (DOT).

ACTION: Notice of proposed rulemaking (NPRM).

SUMMARY: This action proposes to modify the Class E airspace designated as an extension to a Class D or Class E surface area, modify the Class E airspace extending upward from 700 feet above the surface, and remove the Class E airspace extending upward from 1,200 feet above the surface at Grand Canyon National Park Airport, AZ. Additionally, this action proposes to make administrative changes to the existing Class D and Class E legal descriptions. These actions will ensure the safety and management of instrument flight rules (IFR) and visual flight rules (VFR) operations at the airport.

DATES: Comments must be received on or before August 15, 2022.

ADDRESSES: Send comments on this proposal to the U.S. DOT, Docket Operations, 1200 New Jersey Avenue SE, West Building Ground Floor, Room W12–140, Washington, DC 20590; telephone: 1–800–647–5527, or (202) 366–9826. You must identify ''FAA Docket No. FAA–2022–0793; Airspace Docket No. 21–AWP–59,'' at the beginning of your comments. You may also submit comments through the internet at *https://www.regulations.gov.*

FAA Order JO 7400.11F, Airspace Designations and Reporting Points, and subsequent amendments can be viewed online at *https://www.faa.gov/air_traffic/publications.* For further information, you can contact the Airspace Policy Group, Federal Aviation Administration, 800 Independence Avenue SW, Washington, DC 20591; telephone: (202) 267–8783.

FOR FURTHER INFORMATION CONTACT: Nathan A. Chaffman, Federal Aviation Administration, Western Service Center, Operations Support Group, 2200 S 216th Street, Des Moines, WA 98198; telephone (206) 231–3460.

SUPPLEMENTARY INFORMATION:

Authority for This Rulemaking

The FAA's authority to issue rules regarding aviation safety is found in Title 49 of the United States Code (U.S.C.). Subtitle I, Section 106 describes the authority of the FAA Administrator. Subtitle VII, Aviation Programs, describes in more detail the scope of the agency's authority. This rulemaking is promulgated under the authority described in Subtitle VII, Part A, Subpart I, Section 40103. Under that section, the FAA is charged with prescribing regulations to assign the use of airspace necessary to ensure the safety of aircraft and the efficient use of airspace. This regulation is within the scope of that authority, as it would modify the Class D and Class E airspace at Grand Canyon National Park Airport, AZ to support IFR and VFR operations at the airport.

Comments Invited

Interested parties are invited to participate in this proposed rulemaking by submitting such written data, views, or arguments, as they may desire. Comments that provide the factual basis supporting the views and suggestions presented are particularly helpful in developing reasoned regulatory decisions on the proposal. Comments are specifically invited on the overall regulatory, aeronautical, economic, environmental, and energy-related aspects of the proposal. Communications should identify both docket numbers and be submitted in triplicate to the address listed above. Persons wishing the FAA to acknowledge receipt of their comments on this notice must submit with those comments a self-addressed, stamped postcard on which the following statement is made: ''Comments to Docket No. FAA–2022–0793; Airspace Docket No. 21–AWP–59.'' The postcard will be date/time stamped and returned to the commenter.

All communications received before the specified closing date for comments will be considered before taking action on the proposed rule. The proposal contained in this notice may be changed in light of the comments received. A report summarizing each substantive public contact with FAA personnel concerned with this rulemaking will be filed in the docket.

Availability of NPRMs

An electronic copy of this document may be downloaded through the internet at *https://www.regulations.gov.* Recently published rulemaking documents can also be accessed through the FAA's web page at *https://www.faa.gov/air_traffic/publications/airspace_amendments.*

You may review the public docket containing the proposal, any comments received, and any final disposition in person in the Dockets Office (see the **ADDRESSES** section for the address and phone number) between 9:00 a.m. and 5:00 p.m., Monday through Friday, except federal holidays. An informal docket may also be examined during normal business hours at the Northwest Mountain Regional Office of the Federal Aviation Administration, Air Traffic Organization, Western Service Center, Operations Support Group, 2200 S 216th Street, Des Moines, WA 98198.

Availability and Summary of Documents for Incorporation by Reference

This document proposes to amend FAA Order JO 7400.11F, Airspace Designations and Reporting Points, dated August 10, 2021, and effective September 15, 2021. FAA Order JO 7400.11F is publicly available as listed in the **ADDRESSES** section of this document. FAA Order JO 7400.11F lists Class A, B, C, D, and E airspace areas, air traffic service routes, and reporting points.

The Proposal

The FAA is proposing an amendment to 14 CFR part 71 to modify the Class E airspace designated as an extension to a Class D or Class E surface area, modify the Class E airspace extending upward from 700 feet above the surface, and remove the Class E airspace extending upward from 1,200 feet above the

surface at Grand Canyon National Park Airport, AZ.

The Class E airspace designated as an extension to a Class D or Class E surface area should be reduced. The VOR RWY 3 approach requires a containment width of 4.8 miles, and additional airspace is not needed.

The Class E airspace extending upward from 700 feet above the surface should be increased a half-mile in size to ensure proper depiction on a VFR sectional chart.

The Class E airspace extending upward from 1,200 feet above the surface should be removed. This area is contained within the Los Angeles Class E airspace designated as a domestic en route airspace area, and duplication is not necessary.

Lastly, the FAA proposes several administrative modifications to the airport's legal descriptions. The airport's geographic coordinates should be updated to match the FAA's database. The Class D and Class E4 legal descriptions should also be updated to replace the outdated use of the phrases ''Notice to Airmen'' and ''Airport/Facility Directory.'' These phrases should be amended to read ''Notice to Air Missions'' and ''Chart Supplement,'' respectively, to align with current FAA publication nomenclature. Lastly, all navigational aids (NAVAID) should be removed from the Class E4 and E5 legal description text headers, as they are not required to describe the airspace areas, and removal of the NAVAIDs simplifies the legal descriptions.

Class D, Class E4, and Class E5 airspace designations are published in paragraphs 5000, 6004, and 6005, respectively, of FAA Order JO 7400.11F, dated August 10, 2021, and effective September 15, 2021, which is incorporated by reference in 14 CFR 71.1. The Class D and Class E airspace designations listed in this document will be published subsequently in FAA Order JO 7400.11, which is published yearly and becomes effective on September 15.

FAA Order JO 7400.11, Airspace Designations and Reporting Points, is published yearly and becomes effective on September 15.

Regulatory Notices and Analyses

The FAA has determined that this regulation only involves an established body of technical regulations for which frequent and routine amendments are necessary to keep them operationally current, is non-controversial, and unlikely to result in adverse or negative comments. It, therefore: (1) is not a ''significant regulatory action'' under Executive Order 12866; (2) is not a ''significant rule'' under DOT Regulatory Policies and Procedures (44 FR 11034; February 26, 1979); and (3) does not warrant preparation of a regulatory evaluation as the anticipated impact is so minimal. Since this is a routine matter that will only affect air traffic procedures and air navigation, it is certified that this rule, when promulgated, would not have a significant economic impact on a substantial number of small entities under the criteria of the Regulatory Flexibility Act.

Environmental Review

This proposal will be subject to an environmental analysis in accordance with FAA Order 1050.1F, Environmental Impacts: Policies and Procedures, prior to any FAA final regulatory action.

List of Subjects in 14 CFR Part 71

Airspace, Incorporation by reference, Navigation (air).

The Proposed Amendment

Accordingly, pursuant to the authority delegated to me, the Federal Aviation Administration proposes to amend 14 CFR part 71 as follows:

PART 71—DESIGNATION OF CLASS A, B, C, D, AND E AIRSPACE AREAS; AIR TRAFFIC SERVICE ROUTES; AND REPORTING POINTS

■ 1. The authority citation for 14 CFR part 71 continues to read as follows:

Authority: 49 U.S.C. 106(f), 106(g), 40103, 40113, 40120; E.O. 10854, 24 FR 9565, 3 CFR, 1959–1963 Comp., p. 389.

§ 71.1 [Amended]

■ 2. The incorporation by reference in 14 CFR 71.1 of FAA Order JO 7400.11F, Airspace Designations and Reporting Points, dated August 10, 2021, and effective September 15, 2021, is amended as follows:

Paragraph 5000 Class D Airspace.

* * * * *

AWP AZ D Grand Canyon, AZ [Amended]

Grand Canyon National Park Airport, AZ
(Lat. 35°57′09″ N, long. 112°08′49″ W)

That airspace extending upward from the surface to and including 9,100 feet MSL within a 4.3-mile radius of the airport. This Class D airspace area is effective during the specific dates and times established in advance by a Notice to Air Missions. The effective date and time will thereafter be continuously published in the Chart Supplement.

Paragraph 6004 Class E Airspace Areas Designated as an Extension to a Class D or Class E Surface Area.

* * * * *

AWP AZ E4 Grand Canyon, AZ [Amended]

Grand Canyon National Park Airport, AZ
(Lat. 35°57′09″ N, long. 112°08′49″ W)

That airspace extending upward from the surface within 2.4 miles each side of the 213° bearing from the airport, extending from the airport's 4.3-mile radius to 6.6 miles southwest of the airport. This Class E airspace area is effective during the specific dates and times established in advance by a Notice to Air Missions. The effective date and time will thereafter be continuously published in the Chart Supplement.

Paragraph 6005 Class E Airspace Areas Extending Upward From 700 Feet or More Above the Surface of the Earth.

* * * * *

AWP AZ E5 Grand Canyon, AZ [Amended]

Grand Canyon National Park Airport, AZ
(Lat. 35°57′09″ N, long. 112°08′49″ W)

That airspace extending upward from 700 feet above the surface within a 4.8-mile radius of the airport and within 2.9 miles each side of the 213° bearing from the airport extending from the 4.8-mile radius to 7.1 miles southwest of the airport.

Issued in Des Moines, Washington, on June 24, 2022.

B.G. Chew,

Acting Group Manager, Operations Support Group, Western Service Center.

[FR Doc. 2022–13975 Filed 6–29–22; 8:45 am]

BILLING CODE 4910–13–P

DEPARTMENT OF TRANSPORTATION

Federal Aviation Administration

14 CFR Part 71

[Docket No. FAA–2022–0578; Airspace Docket No. 21–AWP–60]

RIN 2120–AA66

Proposed Amendment & Removal of Class E Airspace; Valle Airport, AZ

AGENCY: Federal Aviation Administration (FAA), Department of Transportation (DOT).

ACTION: Notice of proposed rulemaking (NPRM).

SUMMARY: This action proposes to modify the Class E airspace extending upward from 700 feet above the surface, and remove the Class E airspace extending upward from 1,200 feet above the surface at Valle Airport, Grand Canyon, AZ. Additionally, this action proposes to make administrative changes to the existing Class E legal description. These actions will ensure the safety and management of instrument flight rules (IFR) operations at the airport.

DATES: Comments must be received on or before August 15, 2022.

ADDRESSES: Send comments on this proposal to the U.S. DOT, Docket Operations, 1200 New Jersey Avenue SE, West Building Ground Floor, Room W12–140, Washington, DC 20590; telephone: 1–800–647–5527, or (202) 366–9826. You must identify ''FAA Docket No. FAA–2022–0578; Airspace Docket No. 21–AWP–60,'' at the beginning of your comments. You may also submit comments through the internet at *https://www.regulations.gov.*

FAA Order JO 7400.11F, Airspace Designations and Reporting Points, and subsequent amendments can be viewed online at *https://www.faa.gov/air_traffic/publications.* For further information, you can contact the Airspace Policy Group, Federal Aviation Administration, 800 Independence Avenue SW, Washington, DC 20591; telephone: (202) 267–8783.

FOR FURTHER INFORMATION CONTACT: Gerald DeVore, Federal Aviation Administration, Western Service Center, Operations Support Group, 2200 S 216th Street, Des Moines, WA 98198; telephone (206) 231–2245.

SUPPLEMENTARY INFORMATION:

Authority for This Rulemaking

The FAA's authority to issue rules regarding aviation safety is found in Title 49 of the United States Code (U.S.C.). Subtitle I, Section 106 describes the authority of the FAA Administrator. Subtitle VII, Aviation Programs, describes in more detail the scope of the agency's authority. This rulemaking is promulgated under the authority described in Subtitle VII, Part A, Subpart I, Section 40103. Under that section, the FAA is charged with prescribing regulations to assign the use of airspace necessary to ensure the safety of aircraft and the efficient use of airspace. This regulation is within the scope of that authority, as it would modify Class E airspace at Valle Airport, Grand Canyon, AZ, to support IFR operations at the airport.

Comments Invited

Interested parties are invited to participate in this proposed rulemaking by submitting such written data, views, or arguments, as they may desire. Comments that provide the factual basis supporting the views and suggestions presented are particularly helpful in developing reasoned regulatory decisions on the proposal. Comments are specifically invited on the overall regulatory, aeronautical, economic, environmental, and energy-related aspects of the proposal. Communications should identify both docket numbers and be submitted in triplicate to the address listed above. Persons wishing the FAA to acknowledge receipt of their comments on this notice must submit with those comments a self-addressed, stamped postcard on which the following statement is made: ''Comments to Docket No. FAA–2022–0578; Airspace Docket No. 21–AWP–60.'' The postcard will be date/time stamped and returned to the commenter.

All communications received before the specified closing date for comments will be considered before taking action on the proposed rule. The proposal contained in this notice may be changed in light of the comments received. A report summarizing each substantive public contact with FAA personnel concerned with this rulemaking will be filed in the docket.

Availability of NPRMs

An electronic copy of this document may be downloaded through the internet at *https://www.regulations.gov.* Recently published rulemaking documents can also be accessed through the FAA's web page at *https://www.faa.gov/air_traffic/publications/airspace_amendments.*

You may review the public docket containing the proposal, any comments received, and any final disposition in person in the Dockets Office (see the **ADDRESSES** section for the address and phone number) between 9:00 a.m. and 5:00 p.m., Monday through Friday, except federal holidays. An informal docket may also be examined during normal business hours at the Northwest Mountain Regional Office of the Federal Aviation Administration, Air Traffic Organization, Western Service Center, Operations Support Group, 2200 S 216th Street, Des Moines, WA 98198.

Availability and Summary of Documents for Incorporation by Reference

This document proposes to amend FAA Order JO 7400.11F, dated August 10, 2021, and effective September 15, 2021. FAA Order JO 7400.11F is publicly available as listed in the **ADDRESSES** section of this document. FAA Order JO 7400.11F lists Class A, B, C, D, and E airspace areas, air traffic service routes, and reporting points.

The Proposal

The FAA is proposing an amendment to 14 CFR part 71 by modifying Class E airspace extending upward from 700 feet above the surface at Valle Airport, Grand Canyon, AZ. This airspace should be modified to remove the extensions north and south of the airport, as the extensions are no longer needed. Furthermore, to properly contain departing IFR aircraft flying toward or over rising terrain to 1,200 feet above the surface, the eastern portion of the airspace radius should be increased from 6.4 miles to 6.8 miles.

Additionally, the FAA is also proposing the Class E airspace extending upward from 1,200 feet above the surface should be removed. This area is contained within the Los Angeles Class E airspace designated as a domestic en route airspace area, and duplication is not necessary.

Finally, the legal description should be updated to contain the correct city and airport names on lines one and two, and the geographic coordinates for the airport should be updated to match the FAA's database.

The Class E5 airspace designation is published in paragraph 6005 of FAA Order JO 7400.11F, dated August 10, 2021, and effective September 15, 2021, which is incorporated by reference in 14 CFR 71.1. The Class E airspace designation listed in this document will be published subsequently in FAA Order JO 7400.11, which is published yearly and becomes effective on September 15.

Regulatory Notices and Analyses

The FAA has determined that this regulation only involves an established body of technical regulations for which frequent and routine amendments are necessary to keep them operationally current, is non-controversial, and unlikely to result in adverse or negative comments. It therefore: (1) is not a ''significant regulatory action'' under Executive Order 12866; (2) is not a ''significant rule'' under DOT Regulatory Policies and Procedures (44 FR 11034; February 26, 1979); and (3) does not warrant preparation of a regulatory evaluation as the anticipated impact is so minimal. Since this is a routine matter that will only affect air traffic procedures and air navigation, it is certified that this rule, when promulgated, would not have a significant economic impact on a substantial number of small entities under the criteria of the Regulatory Flexibility Act.

Environmental Review

This proposal will be subject to an environmental analysis in accordance with FAA Order 1050.1F, Environmental Impacts: Policies and Procedures, prior to any FAA final regulatory action.

List of Subjects in 14 CFR Part 71

Airspace, Incorporation by reference, Navigation (air).

The Proposed Amendment

Accordingly, pursuant to the authority delegated to me, the Federal Aviation Administration proposes to amend 14 CFR part 71 as follows:

PART 71—DESIGNATION OF CLASS A, B, C, D, AND E AIRSPACE AREAS; AIR TRAFFIC SERVICE ROUTES; AND REPORTING POINTS

■ 1. The authority citation for 14 CFR part 71 continues to read as follows:

Authority: 49 U.S.C. 106(f), 106(g), 40103, 40113, 40120; E.O. 10854, 24 FR 9565, 3 CFR, 1959–1963 Comp., p. 389.

§ 71.1 [Amended]

■ 2. The incorporation by reference in 14 CFR 71.1 of FAA Order JO 7400.11F, Airspace Designations and Reporting Points, dated August 10, 2021, and effective September 15, 2021, is amended as follows:

Paragraph 6005 Class E Airspace Areas Extending Upward From 700 Feet or More Above the Surface of the Earth.

* * * * *

AWP AZ E5 Grand Canyon, AZ [Amended]

Valle Airport, AZ
(Lat. 35°39′02″ N, long. 112°08′53″ W)

That airspace extending upward from 700 feet above the surface within a 6.8-mile radius of the airport beginning at the 020° bearing from the airport clockwise to the 190° bearing from the airport, and within a 6.4-mile radius of the airport beginning at the 190° bearing from the airport clockwise to the 020° bearing from the airport.

Issued in Des Moines, Washington, on June 24, 2022.

B.G. Chew,

Acting Group Manager, Operations Support Group, Western Service Center.

[FR Doc. 2022–13976 Filed 6–29–22; 8:45 am]

BILLING CODE 4910–13–P

DEPARTMENT OF HEALTH AND HUMAN SERVICES

Food and Drug Administration

21 CFR Part 878

[Docket No. FDA–2022–N–0794]

General and Plastic Surgery Devices; Reclassification of Optical Diagnostic Devices for Melanoma Detection and Electrical Impedance Spectrometers, To Be Renamed Computer-Aided Devices Which Provide Adjunctive Diagnostic Information About Lesions Suspicious for Melanoma

AGENCY: Food and Drug Administration, Health and Human Services (HHS).

ACTION: Proposed amendment; proposed order; request for comments.

SUMMARY: The Food and Drug Administration (FDA, Agency, or we) is proposing on its own initiative to reclassify optical diagnostic devices for melanoma detection and electrical impedance spectrometers, both of which are postamendments class III devices (product codes OYD and ONV, respectively), into class II (special controls), subject to premarket notification. FDA is also proposing a new device classification regulation with the name ''computer-aided devices which provide adjunctive diagnostic information about lesions suspicious for melanoma,'' along with special controls that the Agency believes are necessary to provide a reasonable assurance of safety and effectiveness for these devices. If finalized, this order will reclassify these devices from class III to class II and the submission of a premarket approval application (PMA) for these devices will no longer be required, and instead the submission of a premarket notification (510(k)) will be required.

DATES: Submit either electronic or written comments on the proposed order by August 29, 2022. Please see section X of this document for the proposed effective date when the new requirements apply and for the proposed effective date of a final order based on this proposed order.

ADDRESSES: You may submit comments as follows. Please note that late, untimely filed comments will not be considered. The *https://www.regulations.gov* electronic filing system will accept comments until midnight Eastern Time at the end of August 29, 2022. Comments received by mail/hand delivery/courier (for written/paper submissions) will be considered timely if they are postmarked or the delivery service acceptance receipt is on or before that date.

Electronic Submissions

Submit electronic comments in the following way:

- *Federal Rulemaking Portal: https://www.regulations.gov.* Follow the instructions for submitting comments. Comments submitted electronically, including attachments, to *https://www.regulations.gov* will be posted to the docket unchanged. Because your comment will be made public, you are solely responsible for ensuring that your comment does not include any confidential information that you or a third party may not wish to be posted, such as medical information, your or anyone else's Social Security number, or confidential business information, such as a manufacturing process. Please note that if you include your name, contact information, or other information that identifies you in the body of your comments, that information will be posted on *https://www.regulations.gov.*
- If you want to submit a comment with confidential information that you do not wish to be made available to the public, submit the comment as a written/paper submission and in the manner detailed (see ''Written/Paper Submissions'' and ''Instructions'').

Written/Paper Submissions

Submit written/paper submissions as follows:

- *Mail/Hand Delivery/Courier (for written/paper submissions):* Dockets Management Staff (HFA–305), Food and Drug Administration, 5630 Fishers Lane, Rm. 1061, Rockville, MD 20852.
- For written/paper comments submitted to the Dockets Management Staff, FDA will post your comment, as well as any attachments, except for information submitted, marked and identified, as confidential, if submitted as detailed in ''Instructions.''

Instructions: All submissions received must include the Docket No. FDA–2022–N–0794 for ''General and Plastic Surgery Devices; Reclassification of Optical Diagnostic Devices for Melanoma Detection and Electrical Impedance Spectrometers, To Be Renamed Computer-Aided Devices Which Provide Adjunctive Diagnostic Information about Lesions Suspicious for Melanoma.'' Received comments, those filed in a timely manner (see **ADDRESSES**), will be placed in the docket and, except for those submitted as ''Confidential Submissions,'' publicly viewable at *https://www.regulations.gov* or at the Dockets Management Staff between 9 a.m. and 4 p.m., Monday through Friday Eastern Time, 240–402–7500.

- Confidential Submissions—To submit a comment with confidential information that you do not wish to be made publicly available, submit your comments only as a written/paper submission. You should submit two copies total. One copy will include the information you claim to be confidential with a heading or cover note that states ''THIS DOCUMENT CONTAINS CONFIDENTIAL INFORMATION.'' The Agency will review this copy, including the claimed confidential information, in its consideration of comments. The second copy, which will have the claimed confidential information redacted/blacked out, will be available for public viewing and posted on *https://www.regulations.gov.* Submit

both copies to the Dockets Management Staff. If you do not wish your name and contact information to be made publicly available, you can provide this information on the cover sheet and not in the body of your comments and you must identify this information as ''confidential.'' Any information marked as ''confidential'' will not be disclosed except in accordance with 21 CFR 10.20 and other applicable disclosure law. For more information about FDA's posting of comments to public dockets, see 80 FR 56469, September 18, 2015, or access the information at: *https://www.govinfo.gov/content/pkg/FR-2015-09-18/pdf/2015-23389.pdf.*

Docket: For access to the docket to read background documents or the electronic and written/paper comments received, go to *https://www.regulations.gov* and insert the docket number, found in brackets in the heading of this document, into the ''Search'' box and follow the prompts and/or go to the Dockets Management Staff, 5630 Fishers Lane, Rm. 1061, Rockville, MD 20852, 240–402–7500.

FOR FURTHER INFORMATION CONTACT: Neil Ogden, Center for Devices and Radiological Health, Food and Drug Administration, 10903 New Hampshire Ave., Bldg. 66, Rm. 4612, Silver Spring, MD 20993, 301–796–6397, *neil.ogden@fda.hhs.gov.*

SUPPLEMENTARY INFORMATION:

I. Background—Regulatory Authorities

The Federal Food, Drug, and Cosmetic Act (the FD&C Act), as amended, establishes a comprehensive system for the regulation of medical devices intended for human use. Section 513 of the FD&C Act (21 U.S.C. 360c) established three categories (classes) of devices, reflecting the regulatory controls needed to provide reasonable assurance of their safety and effectiveness. The three categories of devices are class I (general controls), class II (special controls), and class III (premarket approval).

Section 513(a)(1) of the FD&C Act defines the three classes of devices. Class I devices are those devices for which the general controls of the FD&C Act (controls authorized by or under section 501, 502, 510, 516, 518, 519, or 520 (21 U.S.C. 351, 352, 360, 360f, 360h, 360i, or 360j) or any combination of such sections) are sufficient to provide reasonable assurance of safety and effectiveness; or those devices for which insufficient information exists to determine that general controls are sufficient to provide reasonable assurance of safety and effectiveness or to establish special controls to provide such assurance, but because the devices are not purported or represented to be for a use in supporting or sustaining human life or for a use which is of substantial importance in preventing impairment of human health, and do not present a potential unreasonable risk of illness or injury, are to be regulated by general controls (section 513(a)(1)(A) of the FD&C Act). Class II devices are those devices for which general controls by themselves are insufficient to provide reasonable assurance of safety and effectiveness, and for which there is sufficient information to establish special controls to provide such assurance, including the issue of performance standards, postmarket surveillance, patient registries, development and dissemination of guidelines, recommendations, and other appropriate actions the Agency deems necessary to provide such assurance (section 513(a)(1)(B) of the FD&C Act). Class III devices are those devices for which insufficient information exists to determine that general controls and special controls would provide a reasonable assurance of safety and effectiveness, and are purported or represented to be for a use in supporting or sustaining human life or for a use which is of substantial importance in preventing impairment of human health, or present a potential unreasonable risk of illness or injury (section 513(a)(1)(C) of the FD&C Act).

Devices that were not in commercial distribution before May 28, 1976 (generally referred to as ''postamendments devices'') are automatically classified by section 513(f)(1) of the FD&C Act into class III without any FDA rulemaking process. Those devices remain in class III and require premarket approval, unless, and until: (1) FDA reclassifies the device into class I or II or (2) FDA issues an order finding the device to be substantially equivalent, in accordance with section 513(i) of the FD&C Act, to a predicate device that does not require premarket approval. The Agency determines whether new devices are substantially equivalent to predicate devices by means of the premarket notification procedures in section 510(k) of the FD&C Act (21 U.S.C. 360(k)) and part 807, subpart E, of FDA's regulations (21 CFR part 807).

A postamendments device that has been initially classified in class III under section 513(f)(1) of the FD&C Act may be reclassified into class I or class II under section 513(f)(3) of the FD&C Act. Section 513(f)(3) of the FD&C Act provides that FDA, acting by administrative order, can reclassify the device into class I or class II on its own initiative, or in response to a petition from the manufacturer or importer of the device. To change the classification of the device, the proposed new class must have sufficient regulatory controls to provide reasonable assurance of the safety and effectiveness of the device for its intended use.

Reevaluation of the data previously before the Agency is an appropriate basis for subsequent action where the reevaluation is made in light of newly available regulatory authority (see *Bell* v. *Goddard,* 366 F.2d 177, 181 (7th Cir. 1966); *Ethicon, Inc.* v. *FDA,* 762 F. Supp. 382, 388–391 (D.D.C. 1991)) or in light of changes in ''medical science'' (*Upjohn Co.* v. *Finch,* 422 F.2d 944, 951 (6th Cir. 1970)). Whether data before the Agency are old or new, the information to support reclassification must be ''valid scientific evidence,'' as defined in section 513(a)(3) of the FD&C Act and 21 CFR 860.7(c)(2). (See, *e.g., General Medical Co.* v. *FDA,* 770 F.2d 214 (D.C. Cir. 1985); *Contact Lens Mfrs. Assoc.* v. *FDA,* 766 F.2d 592 (D.C. Cir.1985)).

FDA relies upon ''valid scientific evidence'' in the classification process to determine the level of regulation for devices. To be considered in the reclassification process, the ''valid scientific evidence'' upon which the Agency relies must be publicly available. Publicly available information excludes trade secret and/or confidential commercial information, *e.g.,* the contents of a pending PMA (see section 520(c) of the FD&C Act (21 U.S.C. 360j(c))). Section 520(h)(4) of the FD&C Act provides that FDA may use, for reclassification of a device, certain information in a PMA 6 years after the application has been approved.

In accordance with section 513(f)(3) of the FD&C Act, FDA is issuing this proposed order to reclassify optical diagnostic devices for melanoma detection and electrical impedance spectrometers, both of which are postamendments class III devices, into class II (special controls) subject to premarket notification, under a new device classification regulation with the name ''computer-aided devices which provide adjunctive diagnostic information about lesions suspicious for melanoma.'' FDA believes the standard in section 513(a)(1)(B) of the FD&C Act is met as there is sufficient information to establish special controls, which, in addition to general controls, would provide reasonable assurance of the safety and effectiveness of these devices.[1]

[1] FDA notes that the **ACTION** caption for this final order is styled as ''Proposed amendment; proposed

Section 510(m) of the FD&C Act provides that FDA may exempt a class II device from the premarket notification requirements under section 510(k) of the FD&C Act, if FDA determines that premarket notification is not necessary to provide reasonable assurance of the safety and effectiveness of the device. FDA has determined that premarket notification is necessary to provide a reasonable assurance of the safety and effectiveness of computer-aided devices which provide adjunctive diagnostic information about lesions suspicious for melanoma and, therefore, the Agency does not intend to exempt this proposed class II device from the requirement for premarket notification (510(k)) submission as provided under section 510(m) of the FD&C Act.

II. Regulatory History of the Devices

Under section 513(f)(1) of the FD&C Act, optical diagnostic devices for melanoma detection and electrical impedance spectrometers are automatically classified into class III because they were not introduced or delivered for introduction into interstate commerce for commercial distribution before May 28, 1976, and have not been found substantially equivalent to a device placed in commercial distribution after May 28, 1976, which was subsequently classified or reclassified into class II or class I. Therefore, they are subject to PMA requirements under section 515 of the FD&C Act (21 U.S.C. 360e).

On November 1, 2011, FDA approved a PMA for MELAFIND, the first optical diagnostic device for melanoma detection to obtain FDA premarket authorization (Refs. 1–5). MELAFIND is intended for use on clinically atypical cutaneous pigmented lesions with one or more clinical or historical characteristics of melanoma, excluding those with a clinical diagnosis of melanoma or likely melanoma. FDA filed the PMA for MELAFIND (P090012) from MELA Sciences, Inc. on June 9, 2009. At a meeting on November 18, 2010, the FDA General and Plastic Surgery Devices Panel (the ''Panel'') reviewed the MELAFIND PMA (Ref. 6). Among other things, the Panel raised concerns regarding the potential use of MELAFIND by non-dermatologists and untrained operators, and regarding the risk that negative MELAFIND readings could lead to false negative diagnoses (*e.g.,* where no referral forward or biopsy is done based on a negative MELAFIND finding) (Ref. 7). By a vote of eight to seven (with one Panel member abstaining), the Panel voted that the benefits of the device for the proposed indications outweighed its risks for the proposed indications.

FDA subsequently approved the device for use by dermatologists choosing to obtain additional information for a decision to biopsy (and not for confirming a clinical diagnosis of melanoma), and for use only on certain types of lesions—for example, lesions with a diameter between 2 mm and 22 mm, that are accessible by the MELAFIND imager, and that are sufficiently pigmented, among other things (Ref. 8). FDA also imposed certain labeling requirements on the device, including a requirement that the labeling specify that device is for use only by physicians trained in the clinical diagnosis and management of skin cancer (*i.e.,* dermatologists) who have also successfully completed a training program in the appropriate use of the device. FDA required that the sponsor conduct a post-approval study. The study was terminated in 2016 when additional data were provided in support of the safety and effectiveness of the device.

On June 28, 2017, FDA approved a PMA for NEVISENSE, the first electrical impedance spectrometer to obtain FDA premarket authorization. NEVISENSE is indicated for use on cutaneous lesions with one or more clinical or historical characteristics of melanoma, when a dermatologist chooses to obtain additional information when considering biopsy. It is not for use on clinically obvious melanoma and is to be used as one element of the overall clinical assessment.

As of the date of issuance of this proposed order, fewer than 6 years have transpired since FDA's approval of PMA Supplement 11 for MELAFIND (P090012 S11) and the PMA and PMA supplements for NEVISENSE (PMA P150046 and P150046 S1–S4). Therefore, no information from these documents has been used in support of this proposed order to reclassify optical diagnostic devices for melanoma detection and electrical impedance spectrometers into class II (see section 520(h)(4) of the FD&C Act (21 U.S.C. 360j(h)(4))).

As of the date of issuance of this proposed order, there has been a single recall involving the MELAFIND device, and no recalls involving the NEVISENSE device. The MELAFIND recall was initiated by the firm in April 2015 due to the display of probability and histogram data on the device's user interface that was not covered by the device's approval. This recall was classified as class II and was terminated in May 2016. FDA has received no Medical Device Reports (MDRs) associated with optical diagnostic devices for melanoma detection or electrical impedance spectrometers.

As of the date of issuance of this proposed order, no other optical diagnostic devices for melanoma detection or electrical impedance spectrometers have been approved by FDA.

III. Device Description

Optical diagnostic devices for melanoma detection and electrical impedance spectrometers are postamendments devices classified into class III under section 513(f)(1) of the FD&C Act. An optical diagnostic device for melanoma detection is a prescription device for use in the detection of melanoma and high-grade lesions among atypical lesions in order to rule out melanoma, through the use of visible and infrared optical radiation to generate images of targeted atypical lesions. The device is a multispectral, non-invasive, and automated (objective) computer-vision system that classifies the image of a pigmented skin lesion based upon the degree of 3-dimensional morphological disorganization. It is intended for use on clinically atypical cutaneous pigmented lesions with one or more clinical or historical characteristics of melanoma, excluding those with a clinical diagnosis of melanoma or likely melanoma.

An electrical impedance spectrometer is a prescription device used on cutaneous lesions with one or more clinical or historical characteristics of melanoma, when a dermatologist chooses to obtain additional information when considering biopsy. The device consists of a control unit and a disposable electrode, which is used to measure electrical impedance of skin lesions and provide an output called the electrical impedance spectroscopy score. An electrical impedance spectrometer is not for use on clinically obvious melanoma, and is to be used as one element of the overall clinical assessment. The output given by the device is to be used in combination with clinical and historical signs of melanoma to obtain additional information prior to a decision to biopsy.

FDA proposes to revise 21 CFR part 878 to create a new device classification regulation with the name ''computer-

order,'' rather than ''Proposed order.'' Beginning in December 2019, this editorial change was made to indicate that the document ''amends'' the Code of Federal Regulations. The change was made in accordance with the Office of Federal Register's (OFR) interpretations of the Federal Register Act (44 U.S.C. chapter 15), its implementing regulations (1 CFR 5.9 and parts 21 and 22), and the Document Drafting Handbook.

aided devices which provide adjunctive diagnostic information about lesions suspicious for melanoma.'' A computer-aided device which provides adjunctive diagnostic information about lesions suspicious for melanoma is a device that is used to aid in the decision-making process for melanoma detection. The device is intended for prescription use by a physician trained in the clinical diagnosis and management of skin cancer (*e.g.,* a dermatologist) on skin lesions with one or more clinical or historical characteristics of melanoma, and is based on a computer algorithm to analyze optical or other physical properties of a skin lesion. The algorithm returns a classification of the skin lesion regarding melanoma when a physician trained in the clinical diagnosis and management of skin cancer chooses to obtain additional information when considering biopsy. The device is not for use as a stand-alone diagnostic. Optical diagnostic devices for melanoma detection and electrical impedance spectrometers are both examples of computer-aided devices which provide adjunctive diagnostic information about lesions suspicious for melanoma. FDA believes that computer-aided devices which provide adjunctive diagnostic information about lesions suspicious for melanoma can facilitate more accurate triaging and management of those lesions. The devices can provide physicians trained in the clinical diagnosis and management of skin cancer an additional source of adjunctive information when triaging patient care for melanoma.

IV. Proposed Reclassification and Summary of Reasons for Reclassification

In accordance with section 513(f)(3) of the FD&C Act and 21 CFR part 860, subpart C, FDA is proposing to reclassify optical diagnostic devices for melanoma detection and electrical impedance spectrometers from class III into class II, subject to premarket notification (510(k)) requirements. FDA believes that there is sufficient information to establish special controls, and that these special controls, together with general controls, are necessary to provide a reasonable assurance of the safety and effectiveness of optical diagnostic devices for melanoma detection and electrical impedance spectrometers, to be renamed computer-aided devices which provide adjunctive diagnostic information about lesions suspicious for melanoma. Optical diagnostic devices for melanoma detection and electrical impedance spectrometers are prescription devices, and under this proposed order, if finalized, computer-aided devices which provide adjunctive diagnostic information about lesions suspicious for melanoma will be prescription devices. As such, the devices must satisfy prescription labeling requirements (see § 801.109 (21 CFR 801.109), *Prescription devices*). Prescription devices are exempt from the requirement for adequate directions for use for the layperson under section 502(f)(1) of the FD&C Act (21 U.S.C. 352(f)(1)) and 21 CFR 801.5, as long as the conditions of § 801.109 are met.

Section 510(m) of the FD&C Act provides that FDA may exempt a class II device from the premarket notification requirements under section 510(k) of the FD&C Act, if FDA determines that premarket notification is not necessary to provide reasonable assurance of the safety and effectiveness of the device. For computer-aided devices which provide adjunctive diagnostic information about lesions suspicious for melanoma, FDA has determined that premarket notification is necessary to provide a reasonable assurance of the safety and effectiveness of these devices. Therefore, the Agency does not intend to exempt these proposed class II devices from 510(k) requirements. If this proposed order is finalized, persons who intend to market a computer-aided device which provides adjunctive diagnostic information about lesions suspicious for melanoma will need to submit to FDA a 510(k) and receive clearance prior to marketing the device.

FDA believes that there is sufficient information available to FDA through the MELAFIND PMA and associated Panel considerations of that PMA,[2] published peer-reviewed literature, and FDA's publicly available MDR database, Manufacturer and User Facility Device Experience (MAUDE) database, and Medical Device Recall database to establish special controls that effectively mitigate the risks to health identified in section V. Absent the special controls identified in this proposed order, general controls applicable to the device are insufficient to provide reasonable assurance of the safety and effectiveness of the device.

V. Public Health Benefits and Risks to Health

FDA is providing a substantive summary of the valid scientific evidence concerning the public health benefits of the use of computer-aided devices which provide adjunctive diagnostic information about lesions suspicious for melanoma, and the nature (and if known, the incidence) of the risks of the devices (see further discussion of the special controls being proposed to mitigate these risks in section VII of this proposed order). FDA reviewed data in the PMA for MELAFIND (P090012) available to FDA under section 520(h)(4) of the FD&C Act, input from the 2010 Panel on P090012, published peer-reviewed literature, and postmarket information regarding computer-aided devices which provide adjunctive diagnostic information about lesions suspicious for melanoma.

Computer-aided devices which provide adjunctive diagnostic information about lesions suspicious for melanoma provide a benefit to the public health by facilitating more accurate triaging and management of those lesions. The devices can provide physicians trained in the clinical diagnosis and management of skin cancer an additional source of adjunctive information when triaging patient care for melanoma.

FDA has identified the following risks to health associated with the use of computer-aided devices which provide adjunctive diagnostic information about lesions suspicious for melanoma:

- *False negative or false positive results*—False negative results could result in complications such as incorrect or delayed diagnoses and delays in biopsy decisions and melanoma treatment, which may allow an undetected condition to worsen and potentially increase morbidity and mortality. False positive results may result in complications such as incorrect management of the patient, including unnecessary additional invasive biopsy procedures and more frequent screenings, as well as the potential administration of inappropriate treatments and/or the withholding of appropriate treatments, with possible adverse effects.
- *Use error/improper device use*—The device could be misused to analyze images from an unintended patient population, an unintended anatomical site, or lesions having an unintended attribute, or to analyze images acquired with incompatible imaging hardware or incompatible image acquisition parameters, potentially resulting in the device not operating at its expected performance level. The device could also be misused if the user does not follow the appropriate reading protocol for using the device to assess lesions of interest, which may lead to lower accuracy. Inaccurate results may result in the same complications associated

[2] In accordance with section 520(h)(4) of the FD&C Act, FDA has not relied on information in PMAs and PMA supplements approved within the last 6 years to develop proposed special controls or to otherwise inform the proposed reclassification.

with false negative or false positive results as discussed above.

• *Device failure/malfunction*—Device failure or malfunction could result in the absence or delay of device output, or incorrect device output, which could lead to inaccurate patient assessment. Inaccurate results may result in the same complications associated with false negative or false positive results as discussed above.

• *Electrical, thermal, mechanical, or light-related injury*—While in operation, the device may discharge electricity that could shock the user or patient. Electrical discharge or exposure to device-generated heat may cause thermal injury or discomfort. Moving parts may cause mechanical injury. For devices that utilize energy (*e.g.,* light) to provide adjunctive diagnostic information, accidental eye exposure to the energy source could cause eye injury.

• *Interference with other devices*—Individuals with electrically powered implants could experience an adverse interaction with the device due to electromagnetic interference or radiofrequency interference.

• *Adverse tissue reaction*—A patient could experience skin irritation and/or allergic reaction associated with the use and operation of the device via the use of non-biocompatible materials in patient-contacting devices.

• *Infection/cross contamination*—If components of the device that must be sterile are not adequately sterilized or if reusable components are not adequately reprocessed between uses, the device may introduce pathogenic organisms to patients and cause an infection.

VI. Summary of Data Upon Which the Reclassification Is Based

FDA has considered and analyzed the following information: (1) data in PMA P090012, (2) input from the 2010 Panel on P090012, (3) published peer-reviewed literature, and (4) FDA's publicly available MDR, MAUDE, and Medical Device Recall databases. The available evidence demonstrates that there are public health benefits derived from the use of computer-aided devices which provide adjunctive diagnostic information about lesions suspicious for melanoma. In addition, the nature of the associated risks to health are known, and special controls can be established to sufficiently mitigate these risks.

FDA is proposing a single generic device type for computer-aided devices which provide adjunctive diagnostic information about lesions suspicious for melanoma. Although the different modalities included in this proposed order have different technological characteristics in certain respects (*e.g.,* the use of visible and infrared optical radiation vs. the use of an electrode to measure electrical impedance), FDA believes that these devices have sufficiently similar purposes, designs, functions, and other features related to safety and effectiveness such that the same regulatory controls are necessary and sufficient to provide reasonable assurance of safety and effectiveness. FDA believes that a single generic device type is therefore appropriate for these devices.

On June 9, 2009, FDA filed a PMA (P090012) from MELA Sciences, Inc. for the MELAFIND, an optical diagnostic device for melanoma detection. This device is to be used by physicians trained in the clinical diagnosis and management of skin cancer (*i.e.,* dermatologists) and further trained in the appropriate use of the device, for use on clinically atypical cutaneous pigmented lesions with one or more clinical or historical characteristics of melanoma, excluding those with a clinical diagnosis of melanoma or likely melanoma. It is intended to provide adjunctive information to a dermatologist considering biopsy of a suspicious lesion and is not intended to be used to confirm a clinical diagnosis of melanoma. Data provided in the PMA supported that there is a reasonable assurance of safety and effectiveness of this device when used as indicated above. These data included the results of a pivotal clinical trial of MELAFIND, which met its primary safety and effectiveness endpoints by achieving at least 95 percent sensitivity at a 95 percent confidence level to malignant melanoma among lesions with dermatological diagnoses of ''Melanoma cannot be ruled out'' or ''Not melanoma'' (the sensitivity achieved in the study was 98.3 percent), and by achieving a superior pooled specificity (10.6 percent) compared to the study dermatologists (5.5 percent) for lesions that were not malignant, among lesions with dermatological diagnoses of ''Melanoma cannot be ruled out'' or ''Not melanoma.'' Additionally, no direct adverse events (AEs) [3] were reported for the patients enrolled in the MELAFIND pivotal study.

At an advisory committee meeting held on November 18, 2010, the Panel discussed the MELAFIND PMA. The Panel raised concerns regarding, among other things, the use of the MELAFIND device by non-dermatologists, and regarding the use of the device by untrained operators. The Panel, as well as the PMA, also identified false negatives as a potential risk that could result in delayed care, which would be a significant safety concern if unmitigated. When FDA subsequently approved the device, the approval was limited to use as an adjunct to physician decision making and by physicians trained in the clinical diagnosis and management of skin cancer (*i.e.,* dermatologists) who have also successfully completed a training program for the device. Notably, lesions that were clinically suspicious for melanoma would not be evaluated by MELAFIND, and a MELAFIND negative reading would be only part of the assessment for a clinical decision to biopsy, and would not replace clinical judgement (Ref. 1).

FDA also performed a literature search to evaluate data related to optical diagnostic devices for melanoma detection and electrical impedance spectrometers. Published data were found in the literature relevant to optical diagnostic devices for melanoma detection and electrical impedance spectrometers.

The clinical performance of an electrical impedance spectrometer was assessed in a multicenter, prospective, blinded clinical trial published in 2014 (Ref. 9). This study focused on the safety and effectiveness of the device for distinguishing benign skin lesions from melanoma. Eligible skin lesions in the study were examined with the device, photographed, excised, and subjected to histopathological evaluation. One thousand, nine hundred and fifty one patients with 2416 lesions were enrolled; 1943 lesions were eligible and evaluable for the primary efficacy end point,[4] including 265 melanomas. The sensitivity of the device was measured to be 96.6 percent with a specificity of 34.4 percent, meeting the pre-specified study co-primary endpoints of sensitivity ≥0.90 to detect malignant melanoma and non-randomness (odds ratio greater than 1) to aid physicians in melanoma assessment. A total of 36 AEs were observed in 28 patients (1.5 percent), out of which only 3 AEs (occurring on three patients (0.2 percent)) were defined as definitely related to the device. No serious AEs, serious adverse device effects, or unanticipated adverse device effects were observed. The study concluded that the electrical impedance

[3] In this trial, direct adverse events included device-related adverse events, and did not include false negative results that may lead to delays in the timely diagnosis of melanoma cancer and treatment.

[4] The study had two co-primary analyses: a one-sided exact 95 percent confidence bound of the sensitivity in detecting cutaneous melanoma of >90 percent%; and nonrandom result at the given sensitivity, *i.e.,* sensitivity + specificity >1.0.

spectrometer was accurate and safe as a support tool for the detection of cutaneous melanoma by physicians trained in the clinical diagnosis of skin cancer.

In addition, literature reviews of melanoma detection technologies conclude that optical diagnostic devices for melanoma detection and electrical impedance spectrometers are effective as adjunctive sources of information for physicians trained in the clinical diagnosis and management of skin cancer considering biopsy of lesions suspicious for melanoma when they have high sensitivity (*e.g.,* over 90 percent) (Refs. 10–13). These reviews acknowledge that the specificity of these devices can be relatively low, but conclude that the low specificity and low positive predictive value is acceptable when there is very high sensitivity and negative predictive value associated with these devices. Data cited in these reviews support that these devices generally are more sensitive than visual inspection of suspicious lesions without magnification, and that when they are more sensitive than visual inspection, the benefits of using these devices to provide adjunctive information outweigh the risks related to false positives resulting in unnecessary biopsies because the adjunctive information provided by the device can facilitate detection of melanoma that may otherwise go undetected. One review concludes that the use of these devices as part of the biopsy decision making process increases the overall sensitivity for malignant melanoma detection, which justifies the low specificity and high biopsy number due to improved detection of malignant melanoma (Ref. 10).

The totality of the literature reviewed indicates that false results and unnecessary biopsies are among the potential risks related to the use of computer-aided devices which provide adjunctive diagnostic information about lesions suspicious for melanoma (Refs. 1–2, 9–10). The literature reviewed support that these risks can be successfully mitigated by ensuring that the devices are highly sensitive, specifying that the devices are intended to be used to provide adjunctive information for clinical decision making rather than for giving a conclusive diagnosis, and ensuring that the user population are physicians trained in the clinical diagnosis and management of skin cancer and that labeling includes information on the appropriate training for these physicians to use the device (Refs. 11–13).

Finally, a search of FDA's publicly available MDR database revealed no medical device reports for product codes OYD and ONV, the product codes included in this reclassification. A search of FDA's publicly available recall database revealed no entries for devices under the ONV product code and a single entry for a device approved under the OYD product code, posted on May 20, 2015. This Class II recall was conducted due to a software change for the device's user interface that lacked the requisite FDA approval. This recall affected approximately 65 units of the device and was terminated on May 4, 2016. A search of FDA's publicly available MAUDE database revealed no entries for devices under the OYD product code and a single entry for a device approved under the ONV product code. A review of the single entry in the MAUDE database for the ONV product code revealed that the product code was misidentified in the report, as evidenced by the fact that the event date for the entry was May 14, 2014, which was before FDA had approved any devices under this product code.

Based on our review of the information described above, FDA has determined that special controls, in addition to general controls, are necessary to provide a reasonable assurance of safety and effectiveness for computer-aided devices which provide adjunctive diagnostic information about lesions suspicious for melanoma, and that sufficient information exists to establish such special controls. Therefore, FDA, on its own initiative, is proposing to reclassify these devices from class III into class II (special controls), and subject to premarket notification (510(k)) requirements.

VII. Proposed Special Controls

FDA believes that the following proposed special controls would mitigate each of the risks to health described in section V and that these special controls, in addition to general controls, would provide a reasonable assurance of safety and effectiveness for computer-aided devices which provide adjunctive diagnostic information about lesions suspicious for melanoma.

The risk of false positive results and false negative results can be mitigated through clinical performance testing, which may include, for example, stand-alone test(s) with acceptable performance thresholds (*e.g.,* sensitivity and specificity), side-by-side comparison(s), and/or a reader study, as applicable, as well as non-clinical performance testing. The clinical performance testing must demonstrate that the device improves assisted-read detection and/or diagnostic characterization of lesions suspicious for melanoma compared to characterization of lesions without the device in the indicated user population(s) when used in accordance with the instructions for use. The non-clinical performance testing, among other things, must demonstrate that the device performs as intended under anticipated conditions of use. The risk of false positive results and false negative results can be further mitigated by special controls that require information in labeling to provide detailed instructions for use and inform the user of the expected device performance on a dataset representative of the intended population.

The risk associated with use error and inappropriate use of a computer-aided device which provide adjunctive diagnostic information about lesions suspicious for melanoma can be mitigated by requiring that the following information be included in the device labeling: (1) the intended patient population (*e.g.,* gender, Fitzpatrick Skin Type); (2) anatomical site(s); (3) type(s) of lesions; (4) compatible imaging hardware; and (5) compatible image acquisition parameters needed for the device to achieve its intended use. This risk can be further mitigated by special controls that require the device labeling to inform intended users of foreseeable situations in which the device is likely to fail or not to operate at its expected performance level. The risk resulting from not following the intended reading protocol can be mitigated by requiring that the device labeling include a device description and information needed to facilitate the clinical interpretation of all device outputs, and by special controls requiring that the device labeling provide a description of user training required prior to use. This risk can be further mitigated by special controls that require a human factors assessment to demonstrate that intended users can correctly use the device according to the intended use following user training.

The risk of device failure or malfunction can be mitigated by requiring non-clinical performance testing and software verification, validation, and hazard analysis, and by requiring that information needed to facilitate the clinical interpretation of all device outputs be included in the labeling (*e.g.,* negative/positive result, risk score). This risk can be further mitigated by special controls that require the device labeling to inform intended users of foreseeable situations in which the device is likely to fail or

not to operate at its expected performance level.

The risk of electrical, thermal, mechanical, and light-related hazards leading to user injury or discomfort can be mitigated by special controls that require testing that demonstrates: (1) electrical, mechanical, and thermal safety; (2) software verification, validation and hazard analysis; and (3) device labeling that includes instructions on appropriate usage and maintenance of the device. The risk of eye injury due to energy (*e.g.,* light) exposure can be mitigated by special controls that require labeling that warns users about exclusion of lesions close to the eye and unsafe energy exposure to the eyes.

The risk that the device may interfere with other devices due to radiofrequency or electromagnetic interference can be mitigated by requiring testing that demonstrates electromagnetic compatibility.

The risk of adverse tissue reaction for patient-contacting devices can be mitigated by special controls that require elements of the device that may contact the patient to be demonstrated to be biocompatible and labeling that includes, in addition to user qualifications needed for safe use of the device, instructions for device maintenance and validated methods and instructions for reprocessing of any reusable components.

The risks of infection and cross contamination for patient-contacting components can be mitigated by special controls that require sterilization validation, shelf-life testing, and labeling that includes validated methods and instructions for reprocessing of any reusable components.

Table 1 shows how FDA believes each risk to health described in section V would be mitigated by the proposed special controls.

TABLE 1—RISKS TO HEALTH AND MITIGATION MEASURES FOR COMPUTER-AIDED DEVICES WHICH PROVIDE ADJUNCTIVE DIAGNOSTIC INFORMATION ABOUT LESIONS SUSPICIOUS FOR MELANOMA

Identified risk to health	Mitigation measures
False negative or false positive results	Clinical performance testing, non-clinical performance testing, labeling.
Use error/improper device use	Human factors assessment; labeling, including a description of user training.
Device failure/malfunction	Non-clinical performance testing, labeling, software verification, validation, and hazard analysis.
Electrical, thermal, mechanical, or light-related injury.	Electrical, mechanical, and thermal safety testing, labeling, software verification, validation, and hazard analysis.
Interference with other devices	Electromagnetic compatibility testing.
Adverse tissue reaction	Biocompatibility evaluation, labeling.
Infection and cross contamination	Sterilization validation, shelf-life testing, labeling.

If this proposed order is finalized, optical diagnostic devices for melanoma detection and electrical impedance spectrometers will be reclassified into class II (special controls) as computer-aided devices which provide adjunctive diagnostic information about lesions suspicious for melanoma and will be subject to premarket notification requirements under section 510(k) of the FD&C Act. Firms submitting a 510(k) for such a device will be required to comply with the particular mitigation measures set forth in the special controls. FDA believes that adherence to the special controls, in addition to the general controls, is necessary to provide a reasonable assurance of safety and effectiveness of computer-aided devices which provide adjunctive diagnostic information about lesions suspicious for melanoma.

VIII. Analysis of Environmental Impact

The Agency has determined under 21 CFR 25.34(b) that this action is of a type that does not individually or cumulatively have a significant effect on the human environment. Therefore, neither an environmental assessment nor an environmental impact statement is required.

IX. Paperwork Reduction Act of 1995

FDA tentatively concludes that this proposed order contains no new collections of information. Therefore, clearance by the Office of Management and Budget (OMB) under the Paperwork Reduction Act of 1995 (PRA) (44 U.S.C. 3501–3521) is not required. This proposed order refers to previously approved FDA collections of information. These collections of information are subject to review by OMB under the PRA. The collections of information in 21 CFR part 807, subpart E, have been approved under OMB control number 0910–0120; and the collections of information in 21 CFR part 801 have been approved under OMB control number 0910–0485.

X. Proposed Effective Date

FDA proposes that any final order based on this proposal become effective 30 days after the date of its publication in the **Federal Register**.

XI. Codification of Orders

Under section 513(f)(3) of the FD&C Act, FDA may issue final orders to reclassify devices. FDA will continue to codify classifications and reclassifications in the Code of Federal Regulations (CFR). Changes resulting from final orders will appear in the CFR as newly codified orders. Therefore, under section 513(f)(3) of the FD&C Act, in the proposed order, we are proposing to codify computer-aided devices which provide adjunctive diagnostic information about lesions suspicious for melanoma in the new 21 CFR 878.1820, under which computer-aided devices which provide adjunctive diagnostic information about lesions suspicious for melanoma would be reclassified into class II.

XII. References

The following references marked with an asterisk (*) are on display at the Dockets Management Staff (see **ADDRESSES**) and are available for viewing by interested persons between 9 a.m. and 4 p.m., Monday through Friday; they also are available electronically at *https://www.regulations.gov.* References without asterisks are not on public display at *https://www.regulations.gov* because they have copyright restriction. Some may be available at the website address, if listed. References without asterisks are available for viewing only at the Dockets Management Staff. FDA has verified the website addresses, as of the date this document publishes in the **Federal Register**, but websites are subject to change over time.

* 1. P090012 Summary of Safety and Effectiveness Data, available at: *https://www.accessdata.fda.gov/cdrh_docs/pdf9/P090012B.pdf.*

2. A. Hauschild, *et al.* ''To Excise or Not: Impact of MELAFIND on German Dermatologists' Decisions to Biopsy

Atypical Lesions.'' *Journal der Deutschen Dermatologischen Gesellschaft.* 12(7):606–614. June 2014.
3. R.R. Winkelmann, *et al.* ''Enhancement of International Dermatologists' Pigmented Skin Lesion Biopsy Decisions Following Dermoscopy with Subsequent Integration of Multispectral Digital Skin Lesion Analysis.'' *Journal of Clinical and Aesthetic Dermatology.* 9(7):53–5. July 2016.
4. R. Wells, *et al.* ''Comparison of Diagnostic and Management Sensitivity to Melanoma Between Dermatologists and MELAFIND: A Pilot Study.'' *Archives of Dermatology.* 148(9):1083–4. September 2012.
5. L.F. di Ruffano, *et al.* ''Computer-Assisted Diagnosis Techniques (Dermoscopy and Spectroscopy-Based) for Diagnosing Skin Cancer in Adults.'' Cochrane Skin Cancer Diagnostic Test Accuracy Group; *Cochrane Database System Review.* 4;12(12). December 2018.
* 6. FDA, November 18, 2010, Meeting of the General and Plastic Surgery Devices Panel Meeting Materials (available at *https://wayback.archive-it.org/7993/20170403223449/https:/www.fda.gov/AdvisoryCommittees/CommitteesMeetingMaterials/MedicalDevices/MedicalDevicesAdvisoryCommittee/GeneralandPlasticSurgeryDevicesPanel/ucm205684.htm*).
* 7. FDA, November 18, 2010, Meeting of the General and Plastic Surgery Devices Panel, 24-Hour Summary (available at *https://wayback.archive-it.org/7993/20170403223449/https://www.fda.gov/downloads/AdvisoryCommittees/CommitteesMeetingMaterials/MedicalDevices/MedicalDevicesAdvisoryCommittee/GeneralandPlasticSurgeryDevicesPanel/UCM234481.pdf*).
* 8. P090012 Approval Order, available at *https://www.accessdata.fda.gov/cdrh_docs/pdf9/P090012A.pdf.*
9. J. Malvehy, *et al.* ''Clinical Performance of the NEVISENSE System in Cutaneous Melanoma Detection: An International, Multicentre, Prospective and Blinded Clinical Trial on Efficacy and Safety.'' *British Journal of Dermatology.* 171(5):1099–1107. May 2014.
10. R.P. Braun, *et al.* ''Electrical Impedance Spectroscopy in Skin Cancer Diagnosis.'' *Dermatologic Clinics.* 35(4):489–493. October 2017.
11. D.N. Dorrell and L.C. Strowd. ''Skin Cancer Detection Technology.'' *Dermatologic Clinics.* 37(4):527–536. October 2019.
12. C. Fink and H.A. Haenssle. ''Non-Invasive Tools for the Diagnosis of Cutaneous Melanoma.'' *Skin Research and Technology,* pp. 261–271, 23 (3) (2017).
13. R.R. Winkelmann, A.S. Farberg, A.M. Glazer, *et al.* ''Noninvasive Technologies for the Diagnosis of Cutaneous Melanoma.'' *Dermatologic Clinics,* pp. 453–456, 35 (4) (2017).

List of Subjects in 21 CFR Part 878

Medical devices.

Therefore, under the Federal Food, Drug, and Cosmetic Act, and under authority delegated to the Commissioner of Food and Drugs, FDA proposes that 21 CFR part 878 be amended as follows:

PART 878—GENERAL AND PLASTIC SURGERY DEVICES

■ 1. The authority citation for part 878 continues to read as follows:

Authority: 21 U.S.C. 351, 360, 360c, 360e, 360j, 360l, 371.

■ 2. Add § 878.1820 to subpart B to read as follows:

§ 878.1820 Computer-aided devices which provide adjunctive diagnostic information about lesions suspicious for melanoma.

(a) *Identification.* A computer-aided device which provides adjunctive diagnostic information about lesions suspicious for melanoma is a device that is used to aid in the decision-making process for melanoma detection. The device is intended for prescription use by a physician trained in the clinical diagnosis and management of skin cancer (*e.g.,* a dermatologist) on skin lesions with one or more clinical or historical characteristics of melanoma, and is based on a computer algorithm to analyze optical or other physical properties of a skin lesion. The algorithm returns a classification of the skin lesion regarding melanoma when a physician trained in the clinical diagnosis and management of skin cancer chooses to obtain additional information when considering biopsy. The device is not for use as a stand-alone diagnostic.

(b) *Classification.* Class II (special controls). The special controls for this device are:

(1) Clinical performance testing must demonstrate that the device improves assisted-read detection or diagnostic characterization of lesions suspicious for melanoma compared to characterization of lesions without the device in the indicated user population(s) when used in accordance with the instructions for use.

(2) Non-clinical performance testing must demonstrate that the device performs as intended under anticipated conditions of use. Such testing must include testing of safety features intended to mitigate device specific hazards and must demonstrate:

(i) Electromagnetic compatibility, and electrical, mechanical, and thermal safety.

(ii) Continued sterility and package integrity of components that must be sterile, as well as continued device functionality, over the identified shelf life of the device.

(3) Sterilization validation must be conducted for components that must be sterile.

(4) The elements of the device that may contact the patient must be demonstrated to be biocompatible.

(5) Software verification, validation, and hazard analysis must be performed.

(6) A human factors assessment must demonstrate that the intended user can correctly use the device according to the intended use following user training.

(7) Labeling must include:

(i) A description of the device and information needed to facilitate clinical interpretation of all device outputs.

(ii) Information regarding the intended patient population and anatomical site(s), type(s) of lesions, compatible hardware, and compatible image acquisition parameters used with the device in order to achieve the intended use.

(iii) A summary of any clinical testing conducted to demonstrate how the device functions in providing information about the skin lesion. The summary must include the following:

(A) A description of each device output and clinical interpretation.

(B) Any performance measures, including sensitivity and specificity.

(C) Relevant characteristics of the patients studied in the clinical validation (including age, gender, race or ethnicity, disease category), inclusion and exclusion criteria, and a summary of validation results.

(D) The expected performance of the device for all intended use populations.

(iv) A statement that the device is not intended for use as a stand-alone diagnostic.

(v) User qualifications needed for safe use of the device, including a description of user training required prior to use, and a statement that the device is intended to be used by a physician trained in the clinical diagnosis and management of skin cancer (*e.g.,* a dermatologist).

(vi) Warnings and cautions to mitigate any device specific hazards, including the following:

(A) Identifying foreseeable situations in which the device is likely to fail or not to operate at its expected performance level; and

(B) For devices that utilize energy to provide adjunctive diagnostic information, unless available information demonstrates that the specific warnings and cautions do not apply, a statement warning users about exclusion of lesions close to the eye and unsafe energy exposure to the eyes.

(vii) Instructions for device maintenance and validated methods and instructions for reprocessing of any reusable components.

Dated: June 24, 2022.

Lauren K. Roth,

Associate Commissioner for Policy.

[FR Doc. 2022–13954 Filed 6–29–22; 8:45 am]

BILLING CODE 4164–01–P

DEPARTMENT OF LABOR

Occupational Safety and Health Administration

29 CFR Part 1952

[Docket No. OSHA–2022–0008]

RIN 1218–AD41

Massachusetts State Plan for State and Local Government Employers; Notification of Submission; Proposal To Grant Initial State Plan Approval; Request for Public Comment and Opportunity To Request Public Hearing

AGENCY: Occupational Safety and Health Administration (OSHA), Labor.

ACTION: Proposed rule; request for written comments; notification of opportunity to request informal public hearing.

SUMMARY: The Massachusetts Department of Labor Standards (the DLS) has submitted a developmental State Plan for occupational safety and health, applicable only to State and local Government employment (workers of the State and its political subdivisions) (Massachusetts State Plan), for determination of initial approval under Section 18 of the Occupational Safety and Health Act of 1970 (the OSH Act). In this notification, OSHA proposes to grant the Massachusetts State Plan initial approval based on its preliminary assessment that the Massachusetts State Plan meets, or will meet within three years, OSHA's State Plan approval criteria, and that Massachusetts has provided adequate assurances that it will be at least as effective as Federal OSHA in protecting the safety and health of Massachusetts state and local government workers. OSHA proposes to fund initial approval of the Massachusetts State Plan from the State Plan funding available in the Department of Labor's Fiscal Year 2022 budget.

DATES:

Written Comments: Comments and requests for a hearing must be submitted by August 1, 2022.

Informal public hearing: Any interested person may request an informal hearing concerning the initial approval of the State Plan. OSHA will hold such a hearing if the Assistant Secretary of Labor for Occupational Safety and Health (Assistant Secretary) finds that substantial objections have been filed. After the close of the comment period, the Assistant Secretary will review all comments submitted; will review all hearing requests; and will schedule an informal hearing if a hearing is required to resolve substantial issues.

Publication in Massachusetts: No later than 5 days following the date of publication of this notification in the **Federal Register**, Massachusetts shall publish, or cause to be published, reasonable notice within the State containing the same information contained herein.

ADDRESSES: *Written comments:* You may submit written comments and requests for an informal hearing electronically at *www.regulations.gov,* which is the Federal e-Rulemaking Portal. Follow the online instructions for making electronic submissions.

Instructions. All submissions must include the agency's name and the docket number for this rulemaking (Docket No. OSHA–2021–0008).[1] All comments, including any personal information you provide, are placed in the public docket without change and may be made available online at *www.regulations.gov.* Therefore, OSHA cautions commenters about submitting information they do not want made available to the public or submitting materials that contain personal information (either about themselves or others), such as Social Security Numbers and birthdates. Submissions must clearly identify the issues addressed and the positions taken.

Docket: To read or download comments or other material in the docket, go to Docket No. OSHA–2022–0008 at *www.regulations.gov.* All comments and submissions are listed in the *www.regulations.gov* index; however, some information (*e.g.,* copyrighted material) is not publicly available to read or download through that website. All comments and submissions, including copyrighted material, are available for inspection through the OSHA Docket Office. Contact the OSHA Docket Office at (202) 693–2350 (TTY (877)889–5627) for assistance in locating docket submissions.

FOR FURTHER INFORMATION CONTACT:

For press inquiries: Contact Frank Meilinger, Director, OSHA Office of Communications, U.S. Department of Labor; telephone: (202) 693–1999; email: *meilinger.francis2@dol.gov.*

For general and technical information: Contact Douglas J. Kalinowski, Director, OSHA Directorate of Cooperative and State Programs, U.S. Department of Labor; telephone: (202) 693–2200; email: *kalinowski.doug@dol.gov.*

SUPPLEMENTARY INFORMATION:

I. Background

Section 18 of the OSH Act, 29 U.S.C. 667, provides that a State which desires to assume responsibility for the development and enforcement of standards relating to any occupational safety and health issue with respect to a Federal standard which has been promulgated may submit a State Plan to the Assistant Secretary of Labor for Occupational Safety and Health (Assistant Secretary) documenting the proposed program in detail. State and local government employers are excluded from Federal OSHA coverage under the Act (29 U.S.C. 652(5)). However, a State may submit a State Plan for the development and enforcement of occupational safety and health standards applicable only to employees of the State and its political subdivisions (State and local Government employees) (29 CFR 1956.1). The Assistant Secretary will approve a State Plan for State and local Government employees if the Plan provides for the development and enforcement of standards relating to hazards in employment covered by the Plan which are or will be at least as effective in providing safe and healthful employment and places of employment as standards promulgated and enforced under Section 6 of the Act, giving due consideration to differences between State and local Government and private sector employment (29 U.S.C. 667(c); 29 CFR 1956.2(a)). In making this determination, the Assistant Secretary will measure the State Plan against the criteria and indices of effectiveness set forth in 29 CFR part 1956.10 and 1956.11 (29 CFR 1956.2(a)). A State Plan for an occupational safety and health program for State and local Government employees may be approved although it does not yet fully meet this criteria, if it includes satisfactory assurances by the State that it will take the necessary steps to bring the program into conformity with these criteria within the 3-year period immediately following the commencement of the State Plan's operation (29 CFR 1956.2(b)(1)). In such

[1] Documents submitted to the docket by OSHA or stakeholders are assigned document identification numbers (Document ID) for easy identification and retrieval. The full Document ID is the docket number plus a unique four-digit code.

case, the developmental State Plan must include the specific actions (referred to as developmental steps) that the State Plan must take and a schedule for their accomplishment, not to exceed 3 years. Once a State and local Government State Plan has completed the developmental steps, Federal OSHA will publish a notification in the **Federal Register** certifying the State Plan's completion of all developmental steps (29 CFR 1956.23; 29 CFR 1902.33 and 1902.34).

Section 23(g) of the OSH Act provides for funding of up to 50% of the State Plan costs (29 U.S.C. 672(g)). Congress designates specific funds for this purpose (see, *e.g.,* FY 2022 Consolidated Appropriations Act, H.R. 2471 at page 383 (March 17, 2022)).

II. Massachusetts State Plan History

The DLS has a history that traces back to 1912. Although the agency's name has changed slightly over time, the mission of the DLS has always included promoting and protecting workers' health, safety, and working conditions. In 2014, by statute, Massachusetts authorized the DLS to provide State workers with at least the level of protection from workplace safety and health hazards as protections provided under the OSH Act by Federal OSHA (M.G.L. c. 149, § 6½). The DLS's authority to provide such protection was expanded to cover all State and local Government workers, including any political subdivision of the Commonwealth, which includes municipal and county workers, by amendment to the authorizing statute in 2018. Since 2019, the DLS, through its Workplace Safety and Health Program (WSHP), has performed inspections of State and local Government employers to ensure compliance with these requirements.

The DLS began working with OSHA to obtain approval for a State Plan for occupational safety and health, applicable only to State and local Government employment, and submitted a draft Plan to OSHA in December 2020, with final revisions to the Plan in June 2022. The revised Plan has been found to be conceptually approvable as a developmental State Plan.

In Fiscal Year 2022, Congress increased the funds available for State Plans. The Fiscal Year 2022 Omnibus Appropriations Act includes $1,250,000 in State Plan grant funds for the Massachusetts State Plan.

III. Description of the Massachusetts State Plan

Massachusetts designates the DLS as the State agency responsible for administering the Plan throughout the State. A narrative describing the Massachusetts State Plan in detail is included in the docket of this rulemaking at *www.regulations.gov.*

Under the Massachusetts State Plan's enabling legislation, M.G.L. c. 149, §§ 6 and 6½, the DLS has authority to adopt standards and regulations and enforce and administer laws and rules protecting the safety and health of workers of the State and its political subdivisions. The DLS has adopted Federal OSHA occupational safety and health standards through rulemaking. OSHA's standards are incorporated into the Code of Massachusetts Regulations (CMR) at 454 CMR 25.02. The DLS has provided assurances that it will timely adopt identical or at least as effective standards or enforcement policies in the future, whenever OSHA adopts standards and regulations, revisions to existing standards, or enforcement policies that OSHA determines necessary for the enforcement of such standards. The DLS has also provided assurances that it will adopt such standards, policy changes, or requirements that are at least as effective as Federal OSHA's within six months of Federal promulgation (30 days for any emergency temporary standard) in accordance with the requirements set forth at 29 CFR 1953.5.

In addition, the DLS has provided assurances that variances may not be granted unless it is established that adequate protection is afforded to employees under the terms of the variance. Current DLS provisions for granting variances, found at 454 CMR 25.05(6), are inconsistent with OSHA's permanent variance procedure. Therefore, during its developmental period, Massachusetts has provided assurances that it intends to complete the developmental step of amending 454 CMR 25.05 to modify its variance requirements to become consistent with those in the Act and also adopt OSHA's regulation governing variances, 29 CFR part 1905.

The DLS has authority under M.G.L. c. 149, §§ 6, 6½, 10 and 17, and 454 CMR 25.03 to inspect covered workplaces. This authority includes provisions for right of entry for inspection, prohibition of advance notice of inspection, and employers' obligations to maintain records and provide reports as required. 454 CMR 25.02, as authorized through M.G.L. c. 149, § 6½, incorporates OSHA's regulation governing inspections and citations, 29 CFR part 1903, which includes, among other requirements, provision for inspections in response to employee complaints, for written notification if the determination is made that a complaint does not warrant an inspection, and for posting written civil citations, pursuant to 29 CFR 1903.16. 454 CMR 25.03(6) provides for employer and employee representatives to accompany an inspector during the inspection.

The DLS has the authority to remedy retaliation for a State or local Government worker who filed a complaint, instituted any proceeding, testified, or exercised any rights afforded under the Massachusetts State Plan pursuant to the requirement in M.G.L. c. 149, § 6½ such that Massachusetts State and local Government workers have at least the level of protection they would have under OSHA. In addition, 454 CMR 25.02 incorporates OSHA's regulation 29 CFR part 1977—Discrimination Against Employees Exercising Rights Under the Williams-Steiger Occupational Safety and Health Act of 1970. Massachusetts also has a Whistleblower's Protection statute, M.G.L. c. 149, § 185, that protects State and local Government employees and prohibits retaliation through a right of private civil action.

The DLS's authority to issue Civil Citations and penalties is established in M.G.L. c. 149, §§ 6 and 6½, 454 CMR 25.00, 454 CMR 29.00, and 29 CFR part 1903, as incorporated by 454 CMR 25.02. The Director has the discretion to issue civil penalties of up to $1,000 per violation, pursuant to M.G.L. c. 149, § 6, and 454 CMR 29.04(2)(d). The DLS generally issues a Written Warning as the first enforcement action taken against a State or local Government employer. However, an employer's failure to correct a violation within the period of time specified in a Written Warning and Order to Correct issued by the DLS may result in the issuance of a Civil Citation or other enforcement action. The DLS may also issue penalties as a first method of enforcement, without a prior written warning, depending on the gravity of the violation and when the violation warrants such action. The DLS has authority to take other enforcement actions, including issuing a Stop Work Order in cases of imminent danger or other cases as deemed appropriate, and the Massachusetts Attorney General may bring a civil action for declaratory or injunctive relief where necessary.

The DLS has sole authority for administration and enforcement of State

and local Government occupational safety and health within Massachusetts. Prior to adopting or amending regulations, the DLS will consult with the Massachusetts Occupational Health and Safety Hazard Advisory Board pursuant to M.G.L. c. 149, § 6½(d). Other DLS programs are separate from the WSHP with independent authority and will not detract any resources or priorities assigned to the administration of the Massachusetts State Plan. When appropriate, the other programs may support the WSHP to improve workplace safety and compliance.

The DLS currently has eleven inspectors, seven safety inspectors, and four health inspectors, all of whom perform duties related to both enforcement and consultation. If granted initial approval, the DLS will add three safety enforcement inspectors. The DLS will redesignate two of its safety enforcement inspectors and one health inspector to exclusively perform consultation. These re-designated employees will be part of a separate consultation division with distinct supervision from the enforcement inspectors. The DLS will also train one supervisor and two enforcement inspectors to conduct whistleblower investigations.

29 CFR 1956.10(g) requires that State Plans for public employees provide a sufficient number of adequately trained and qualified personnel necessary for the enforcement of standards. The compliance staffing requirements (or benchmarks) for State Plans covering both the private and public sectors are established based on the ''fully effective'' test established in *AFL–CIO* v. *Marshall,* 570 F.2d 1030 (D.C. Cir. 1978). This staffing test and the complex formula used to derive benchmarks for Full Coverage Plans is not intended, nor is it appropriate, for application to the staffing needs of State Plans for occupational safety and health programs covering only State and local Government workers. However, the DLS has given satisfactory assurance in its Plan that it will meet the staffing requirements of 29 CFR 1956.10. The State has also given satisfactory assurances of adequate State matching funds (50 percent) to support the Plan and is requesting initial Federal funding of $1,250,000, for a total initial program effort of $2,500,000.

Although the State statute, M.G.L. c. 149, § 6½, sets forth the general authority and scope for implementing the Massachusetts State Plan, if granted initial approval, the Massachusetts State Plan will be developmental under the terms of 29 CFR 1956.2(b), in that specific rules, regulations, and implementing procedures must still be adopted or revised to carry out the Plan and make it structurally ''at least as effective'' as Federal OSHA and fully operational. As previously noted, the Massachusetts State Plan sets forth a timetable for the accomplishment of these and other developmental steps within three years of Plan approval, as described in the Massachusetts State Plan narrative that is included in the docket of this rulemaking at *www.regulations.gov.* This timetable includes the amendment of certain Massachusetts State Plan regulations, the adoption of certain OSHA regulations, the development of a Technical Manual, transition to use of the OSHA Information System, the development of an Annual Performance Plan and a Five-Year Strategic Plan, completion of training requirements, and implementation of other policies, procedures, and instructions necessary for the operation of a program that is at least as effective as Federal OSHA in its enforcement of occupational safety and health standards.

IV. Effect of Initial Approval

After review of any written comments received and of information received in the event of a public hearing, the Assistant Secretary will grant initial approval of the Massachusetts State Plan if the Assistant Secretary determines that the Plan meets the criteria set forth in the Act and applicable regulations at 29 CFR part 1956. The Assistant Secretary will provide notification of this determination and amendment of the *Code of Federal Regulations* in the **Federal Register**. Massachusetts already has authority to enforce and is carrying out enforcement of its occupational safety and health standards in Massachusetts places of State and local Government employment. However, a determination by OSHA to grant the Massachusetts State Plan initial approval will make Massachusetts eligible to apply for and receive up to 50% matching Federal grant funding, as authorized by the OSH Act under section 23(g) (29 U.S.C. 672(g)). In addition, such determination will signify the beginning of the Massachusetts State Plan's 3-year developmental period, during which Massachusetts will be required to address the developmental steps identified in the Massachusetts State Plan narrative that is included in the docket of this rulemaking at *www.regulations.gov* (29 CFR 1956.2(b)(1)). OSHA will publish a certification Notice in the **Federal Register** to advise the public once Massachusetts has completed all developmental steps (29 CFR 1956.23; 29 CFR 1902.33; 1902.34).

V. Documents of Record

All information and data presently available to OSHA relating to this proceeding have been made a part of the record and placed in the OSHA Docket Office. Most of these documents have also been posted electronically at *www.regulations.gov,* which is the Federal e-Rulemaking Portal; however, some information (*e.g.,* copyrighted material) is not publicly available to read or download through that website. In addition, the State Plan, the narrative describing the Massachusetts State Plan in detail, and written comments received can be made available by contacting OSHA's Office of State Programs at (202) 693–2200 or the office of the Assistant Regional Director for Region 1 at (617) 565–9860.

VI. Public Participation

The Assistant Secretary's decision whether to grant initial approval to the Massachusetts State Plan will be made after careful consideration of all relevant information presented in the rulemaking (29 CFR 1956.20; 29 CFR 1902.20(b)(1)(i)). To aid the Assistant Secretary in making this decision, OSHA is soliciting public participation in this process.

Notice in the State of Massachusetts: The DLS must publish appropriate notice within the State of Massachusetts within five days of publication of this notification, announcing OSHA's proposal to approve a Massachusetts State Plan, contingent on the availability of appropriated funds, and giving notice of the opportunity for public comment.

Written comments: OSHA invites interested persons to submit written data, views, and comments with respect to this proposed initial State Plan approval. These comments must be received on or before August 1, 2022. When submitting comments, persons must follow the procedures specified above in the sections titled **DATES** and **ADDRESSES**. Written submissions must clearly identify the issues addressed and the positions taken with respect to each issue. Comments received by the end of the specified comment period will become part of the record and will be available for public inspection online at *www.regulations.gov* (Docket Number OSHA–2022–0008).

Informal public hearing: Pursuant to 29 CFR 1902.13(f), interested persons may request an informal hearing concerning the proposed initial State Plan approval. Such requests also must be received on or before August 1, 2022.

When submitting comments, persons must follow the procedures specified above in the sections titled **DATES** and **ADDRESSES**. Such requests must present particularized written objections to the proposed initial State Plan approval. Within 30 days of the close of the comment period, the Assistant Secretary will review all comments submitted and review all hearing requests. OSHA will hold the informal hearing if the Assistant Secretary finds that substantial objections have been filed. However, if, after reviewing the comments received during the written comment period, the Assistant Secretary finds that no substantial objections have been filed, then no informal public hearing will be held.

VII. Determination

The Assistant Secretary will, within a reasonable time after the close of the comment period or after the certification of the record if a hearing is held, publish a decision regarding initial approval of the Massachusetts State Plan in the **Federal Register**. All written and oral submissions, as well as other information gathered by OSHA, will be considered in any action taken.

VIII. Regulatory Flexibility Act

OSHA certifies pursuant to the Regulatory Flexibility Act of 1980 (5 U.S.C. 601 *et seq.*) that the proposed initial approval of the Massachusetts State Plan will not have a significant economic impact on a substantial number of small entities. By its own terms, the Plan will have no effect on private sector employment and is limited to the State of Massachusetts and its political subdivisions. Compliance with State OSHA standards is required by State law; Federal approval of a State Plan imposes regulatory requirements only on the agency responsible for administering the State Plan. Accordingly, no new obligations would be placed on State and local Government employers as a result of Federal approval of the Massachusetts State Plan. The approval of a State Plan for State and local Government employers in Massachusetts is not a significant regulatory action as defined in Executive Order 12866.

F. Federalism

Executive Order 13132, ''Federalism,'' emphasizes consultation between Federal agencies and the States and establishes specific review procedures the Federal Government must follow as it carries out policies which affect State or local Governments. OSHA has consulted extensively with Massachusetts throughout the development, submission, and consideration of its proposed State Plan. Although OSHA has determined that the requirements and consultation procedures provided in Executive Order 13132 are not applicable to initial approval decisions under the Act, which have no effect outside the particular State receiving the approval, OSHA has reviewed the proposed Massachusetts initial approval decision and believes it is consistent with the principles and criteria set forth in the Executive order.

List of Subjects in 29 CFR Part 1952

Approval, State Plans.

Authority and Signature

Douglas L. Parker, Assistant Secretary of Labor for Occupational Safety and Health, U.S. Department of Labor, 200 Constitution Avenue NW, Washington, DC 20210, authorized the preparation of this notification. OSHA is issuing this notification under the authority specified by Section 18 of the Occupational Safety and Health Act of 1970 (29 U.S.C. 667), Secretary of Labor's Order No. 8–2020 (85 FR 58393 (Sept. 18, 2020)), and 29 CFR parts 1902 and 1956.

Signed in Washington, DC.

Douglas L. Parker,

Assistant Secretary of Labor for Occupational Safety and Health.

For the reasons stated in the preamble, OSHA proposes to amend 29 CFR part 1952 as follows:

PART 1952—APPROVED STATE PLANS FOR ENFORCEMENT OF STATE STANDARDS

■ 1. The authority citation for part 1952 is revised to read as follows:

Authority: Sec. 18, 84 Stat. 1608 (29 U.S.C. 667); 29 CFR part 1902; Secretary of Labor's Order No. 1–2012 (77 FR 3912, Jan. 25, 2012), or 8–2020 (85 FR 58393, Sept. 18, 2020), as applicable.

Subpart B—List of Approved State Plans for State and Local Government Employees

■ 2. Add § 1952.29 to read as follows:

§ 1952.29 Massachusetts.

(a) The Massachusetts State Plan for State and local Government employees received initial approval from the Assistant Secretary on [DATE OF FINAL DETERMINATION].

(b) The Plan further provides assurances of a fully trained, adequate staff within three years of plan approval, including 8 safety and 3 health compliance officers for enforcement inspections, and 2 safety and 1 health consultants to perform consultation services in the public sector. The State has assured that it will continue to provide a sufficient number of adequately trained and qualified personnel necessary for the enforcement of standards as required by 29 CFR 1956.10. The State has also given satisfactory assurance of adequate funding to support the Plan.

(c) The plan only covers State and local Government employers and employees within the State. For additional details about the plan, please visit *https://www.osha.gov/dcsp/osp/stateprogs/massachusetts.html.*

[FR Doc. 2022–13729 Filed 6–29–22; 8:45 am]

BILLING CODE 4510–26–P

ENVIRONMENTAL PROTECTION AGENCY

40 CFR Part 52

[EPA–R08–OAR–2022–0186; FRL–9930–01–R8]

Approval and Promulgation of Implementation Plans; State of Utah; Revisions to Utah Administrative Code: Environmental Quality; Title R307; Air Quality

AGENCY: Environmental Protection Agency (EPA).

ACTION: Proposed rule.

SUMMARY: The Environmental Protection Agency (EPA) is proposing to approve revisions to the Utah Division of Administrative Rules (DAR) submitted by the State of Utah on May 21, 2020, May 28, 2020, November 3, 2020, and November 12, 2020. The revisions to the Utah Administrative Code address various State Implementation Plan (SIP) changes and updates. Specifically, we are proposing to make clerical updates to the General Requirements, Permits, and Emissions Inventory rules, including updating the effective date of various code of federal regulations (CFR) referenced. Additionally, we are proposing to approve changes to several Permits rules including adding new definitions, clarifying testing methods, and specifying an emissions limit for particulate matter 2.5 ($PM_{2.5}$) for emissions impact analysis. We are also proposing to repeal and replace the Emissions Testing rule as well as approve a new rule related to abrasive blasting in particular matter 10 (PM_{10}) nonattainment areas. The EPA is taking this action pursuant to the Clean Air Act (CAA).

DATES: Written comments must be received on or before August 1, 2022.

ADDRESSES: Submit your comments, identified by Docket ID No. EPA–R08–OAR–2022–0186, to the Federal Rulemaking Portal: *https://www.regulations.gov.* Follow the online instructions for submitting comments. Once submitted, comments cannot be edited or removed from *www.regulations.gov.* The EPA may publish any comment received to its public docket. Do not submit electronically any information you consider to be Confidential Business Information (CBI) or other information whose disclosure is restricted by statute. Multimedia submissions (audio, video, etc.) must be accompanied by a written comment. The written comment is considered the official comment and should include discussion of all points you wish to make. The EPA will generally not consider comments or comment contents located outside of the primary submission (*i.e.,* on the web, cloud, or other file sharing system). For additional submission methods, the full EPA public comment policy, information about CBI or multimedia submissions, and general guidance on making effective comments, please visit *https://www2.epa.gov/dockets/commenting-epa-dockets.*

Docket: All documents in the docket are listed in the *www.regulations.gov* index. Although listed in the index, some information is not publicly available, *e.g.,* CBI or other information whose disclosure is restricted by statute. Certain other material, such as copyrighted material, will be publicly available only in hard copy. Publicly available docket materials are available electronically in *www.regulations.gov.* To reduce the risk of COVID–19 transmission, for this action we do not plan to offer hard copy review of the docket. Please email or call the person listed in the **FOR FURTHER INFORMATION CONTACT** section if you need to make alternative arrangements for access to the docket.

FOR FURTHER INFORMATION CONTACT: Amanda Brimmer, Air and Radiation Division, EPA, Region 8, Mailcode 8ARD–IO, 1595 Wynkoop Street, Denver, Colorado 80202–1129, (303) 312–6323, *brimmer.amanda@epa.gov.*

SUPPLEMENTARY INFORMATION: Throughout this document wherever ''we,'' ''us,'' or ''our'' is used, we mean the EPA.

I. Background

Between May 21, 2020, and November 12, 2020, the State of Utah submitted multiple SIP revisions for EPA approval including: revisions to R307–101 changing the date of the referenced CFR from July 1, 2017 to July 1, 2019; correction to R307–150–1 rule number reference; repeal and replacement of R307–165 related to stack testing; addition of new section R307–306, related to abrasive blasting specifically in particulate matter (PM) nonattainment and maintenance areas; minor and major revisions to R307–401 including additions of new definitions and specifying testing methods; clerical updates to R307–405, deleting CFR date of July 2018, and renumbering subsections; and clerical revisions to R307–410 including removing specific CFR dates and adding an emissions limit for $PM_{2.5}$ to Table 1. The EPA is not proposing action at this time on submittals from May 21, 2020 for R307–401–16, from May 28, 2020 for parts of R307–150 and multiple state rules that fall under the R307–500 rule series, and from November 3, 2020, for R307–150, R307–210, R307–214, and R307–410–5.

II. The EPA's Evaluation

Section 110(k) of the CAA addresses the EPA's rulemaking action on SIP submissions by states. The CAA requires states to observe certain procedural requirements in developing SIP revisions for submittal to the EPA. Section 110(a)(2) of the CAA requires that each SIP revision be adopted after reasonable notice and public hearing. This must occur prior to the revision being submitted by a state to the EPA. Guidance and policy documents that were used to evaluate enforceability, revision/relaxation, and rule stringency requirements for the applicable criteria pollutants was the, ''State Implementation Plans; General Preamble for the Implementation of Title I of the Clean Air Act Amendments of 1990,'' 57 FR 13498 (April 16, 1992); 57 FR 18070 (April 28, 1992). For clarity, EPA's evaluation is broken out by rule number.

R307–101: General Requirements

On November 3, 2020, the EPA received a submission from the State of Utah for R307–101–3, General Requirements: Version of Code of Federal Regulations Incorporated by Reference, which is the general version of the CFR incorporation which applies throughout Utah's R307 rule series, unless otherwise specified in a specific rule. The revision updated the referenced effective date of relevant 40 CFR references from July 1, 2017, to July 1, 2019. States periodically update their SIPs to incorporate by reference the most current 40 CFR to correlate environmental regulations. This rule, as submitted by the State, does not cover rules that specify their own date for the version of the CFR that are incorporated by reference. On July 10, 2020 (85 FR 41398), we previously acted on R307–101–3, updating the CFR reference date and received no comments.

On March 4, 2020, the Utah Air Quality Board approved for public comment revisions for rule R307–101–3. The state public comment period ran from April 1 to May 4, 2020. A public hearing was not requested and no comments were received. The effective date of this rule was June 4, 2020. EPA is proposing to approve this revision.

R307–150: Emissions Inventories

On May 28, 2020, the EPA received a submission from the State of Utah for R307–150, Emission Inventories, section 1, which fixes an erroneous reference that should have been to R307. This revision did go through public comment October 1–November 15, 2017, and received no comments. It went into effect March 5, 2018.

R307–165: Emissions Testing

On November 3, 2020, the EPA received a submission from the State of Utah for R307–165, Stack Testing, sections 1 through 6. Due to the multitude of changes, the State decided to repeal R307–165, Emission Testing and replace it with all new text as R307–165. Stack Testing. The replacement text outlines the requirements for notifying, conducting, and reporting stack tests to Utah Division of Air Quality (UDAQ) and aligns the rule with federal requirements. The revisions also aligned the rule with State rule formatting and make clerical revisions for general clarity which strengthens the SIP.

On March 4, 2020, the Utah Air Quality Board approved for public comment revisions for rule R307–165. The state public comment period ran from April 1 to May 4, 2020. A public hearing was not requested and no comments were received. The effective date of this rule was August 10, 2020. EPA is proposing to approve these revisions.

R307–306: PM_{10} Nonattainment and Maintenance Areas: Abrasive Blasting

On November 12, 2020, the EPA received a submission from the State of Utah for R307–306, PM_{10} Nonattainment and Maintenance Areas: Abrasive Blasting, sections 1 through 7. The new rule was based on language in Utah state rule R307–206, Emission Standards: Abrasive Blasting, previously approved

by EPA in 2006,[1] with the addition of a few sections and renumbering for consistency with State rule formatting. The new rule applies specifically to PM_{10} nonattainment and maintenance areas, being effective 180 days after the area is officially designated a nonattainment area for PM_{10} by the EPA. Additionally, section R307–306–4 and R307–306–5 were strengthened from prior R307–206 text, with the standard for opacity being tightened from 40% to 20% and adding that visible emissions shall be measured using EPA Method 9. Additionally, section R307–306–3 added reference to Utah's SIP Section IX, Part H for clarity.

On March 9, 2005, the Utah Air Quality Board approved for public comment revisions for R307–306. The public comment period for was from March 1 to April 2, 2005. In response to public comment, clarifications were made to Rule R307–306, but no significant changes were made. Additional comments were accepted August 1 to September 2, 2005, on these minor revisions. No additional comments were received and the rule became effective September 2, 2005. EPA is proposing to approve these revisions, including use of Method 9 as an acceptable method under 40 CFR part 51 Appendix M—Recommended Test Methods for State Implementation Plans.[2]

R307–401: Permits: New and Modified

On May 21, 2020, and May 28, 2020, the EPA received submissions from the State of Utah for R307–401, Permit: New and Modified Sources. The May 28, 2020 revisions were primarily clerical in nature, updating section references, and renumbering or removing numbers as necessary, with a few substantive changes . Section R307–401–2 removed subsection (1) and added clarifying references. Sections R307–401–4 through R307–401–6 and R307–401–9 had clerical revisions and updated section references. Section R307–401–10 added subsection (5) which included a definition for ''well site,'' as defined in 40 CFR 60.5430a, to exempted source categories, and a later update added ''centralized tank batteries'' for clarification of the section.[3] Rule R307–401–11 includes a clerical update to subsection (1)(c) changing 'contaminants' to 'pollutants.' Section R307–401–14 through R307–401–16 included updated section references.

The May 21, 2020 submission had more substantive revisions, including adding definitions to R307–401–2 for ''air strippers,'' ''soil aeration,'' ''soil vapor extraction,'' and ''vapor mitigation system (VMS).'' R307–401–10 was amended to include the addition of a new subsection (7) related to the exemption of ''vapor mitigation systems,'' which exempts these systems from the New Source Review (NSR) permitting process and from the requirements of R307–401–15. Section R307–401–15 revisions updated the section title to include 'vapor extraction' and added much clarifying text related to air strippers and soil vapor extraction including testing and sampling procedures and reporting requirements.

On August 6, 2017 and September 7, 2019, the Utah Air Quality Board approved a public comment period for rule R307–401, Permit: New and Modified Sources. Public comment was taken October 1 through November 15, 2017 and September 1–30, 2019, respectively. The 2017 revision to R307–401–10 was updated based on received public comment. Revisions went into effect March 5, 2018, and March 5, 2020, respectively. EPA is proposing to approve these revisions.

R307–405: Permits: Major Sources in Attainment or Unclassified Areas (PSD)

On November 3, 2020, the EPA received a submission from the State of Utah for R307–405–2, Permits: Major Sources in Attainment or Unclassified Areas (PSD), which streamlines the process for future rulemaking, making individual amendments to this rule no longer necessary to update their CFR incorporation, as the effected CFR date now falls under R307–101–3. On March 4, 2020, the Utah Air Quality Board approved this revision for public comment, which ran from April 1 to May 4, 2020. A public hearing was not requested and no comments were received. The effective date of this rule was June 4, 2020. EPA is proposing to approve this revision.

R307–410: Permits: Emissions Impact Analysis

On November 3, 2020, the EPA received a submission from the State of Utah for R307- R307–410 Permit: Emission Impact Analysis, for sections 3 and 4. Revisions to R307–410–3 is a clerical update, removing the effective date of 40 CFR part 51, appendix. W. Revisions to R307–410–4 updates Table 1 which adds a $PM_{2.5}$ significant emission rate (SER) modeling threshold of 10 tons per year (tpy) for direct emissions of major and minor sources in attainment areas established in 40 CFR 51.166(b)(23). This specific addition was done by the State in anticipation of an attainment designation of their $PM_{2.5}$ nonattainment areas.

Although SERs are used for PSD applicability purposes, the State of Utah also uses SERs as the modeling threshold for both major and minor sources. When an area is designated attainment, modeling is an important part of the NSR program to ensure that a modification or new source will not cause or contribute to a violation of the National Ambient Air Quality Standard (NAAQS). Therefore, the State of Utah intends to ensure, through this rule revision, that appropriate requirements are established for evaluating the impact of new or modified sources upon anticipated redesignation of Utah's $PM_{2.5}$ nonattainment areas. In addition, this revision corrects the terminology for the non-fugitive PM_{10} modeling threshold; specifically, the term ''non-fugitive dust,'' which is not defined in the Utah administrative rules and is technically incorrect.

On March 4, 2020, the Utah Air Quality Board approved for public comment revisions for rule R307–410–3, which ran from April 1 to May 4, 2020. A public hearing was not requested and no comments were received. The effective date of this rule was June 4, 2020. Additionally, on May 6, 2020, the Utah Air Quality Board approved for public comment revisions to Rule R307–410–4, which ran from June 1 to July 2, 2020. No public comments were received nor was a public hearing requested and this rule became effective August 6, 2020. EPA is proposing to approve both revisions.

The following rules were submitted to the EPA; however, we are not acting on the revisions within this proposed action. We are not proposing to act on the State of Utah's rule revision submitted on May 21, 2020, to R307–401–16. We are also not proposing action on the May 28, 2020, submittal for R307–150–3, R307–150–9, nor any of the R307–500 series rules as there is currently not a requirement for the Uinta Basin Marginal Nonattainment Area to submit a SIP revision for EPA approval under CAA Part D section 182(a).[4] Additionally, we are not

[1] *See* 71 FR 7679, 2/14/06.

[2] In 2006, EPA adopted newer testing methods which are virtually identical to EPA's Method 9 (found in 40 CFR part 60, appendix A), except for the data-reduction procedures, which provide for averaging times other than 6 minutes. Therefore, using Method 203A (found in 40 CFR part 51, appendix M), with a 6-minute averaging time would be the same as following EPA Method 9.

[3] This revision precedes a previous SIP action by EPA (*See* 86 FR 28493, 5/27/2021), which added a subsequent subsection (6), thus subsection (6) is being reaffirmed in this action.

[4] The State of Utah intends to correct the requested action on R307–150, R307–210, R307–

proposing to act on the November 3, 2020, submittal related to revisions of R307–150–3 and R307–150–9, nor are we approving R307–210, R307–214, nor R307–410–5, because authority for these rules has already been delegated to the State of Utah.[5] EPA is working with the State of Utah to correct these rules, which will be acted on at some future date as applicable.

III. Proposed Action

Based on the above discussion, EPA finds that the proposed revisions to R307–101, R307–150, R307–401, R307–405, and R307–410 as well new rule R307–306, and the repeal and replacement of R307–165 would not interfere with attainment or maintenance of any of the NAAQS in the State of Utah and would not interfere with any other applicable requirement of the CAA and thus is approvable under CAA 110(a)(2)(C), 40 CFR 51.160–164 and CAA section 110(l). Specifically, we are proposing to approve the State of Utah's rule revision submitted on May 21, 2020, to R307–401–2, R307–401–10, and R307–401–15. Additionally, we are proposing to approve the State of Utah's rule revision submitted on May 28, 2020, to R307–150–1, R307–401–2, R307–401–4 through R307–401–6, R307–401–9 through R307–401–11, R307–401–14 through R307–401–16. Additionally, we are proposing to approve the State of Utah's rule revision submitted on November 3, 2020, to R307–101–3, R307–165 sections 1 through 6, R307–405–2, R307–410–3, and R307–410–4. Furthermore, we are proposing to approve the State of Utah's rule revision submitted on November 12, 2020, to include new rule R307–306, sections 1 through 7 into the SIP.

IV. Incorporation by Reference

In this document, the EPA is proposing to include regulatory text in an EPA final rule that includes incorporation by reference. In accordance with requirements of 1 CFR 51.5, the EPA is proposing to incorporate by reference the UDAQ rules discussed in section I. The EPA has made, and will continue to make, these materials generally available through *www.regulations.gov* (please contact the person identified in the **FOR FURTHER INFORMATION CONTACT** section of this preamble for more information).

V. Statutory and Executive Order Reviews

Under the CAA, the Administrator is required to approve a SIP submission that complies with the provisions of the Act and applicable Federal regulations. 42 U.S.C. 7410(k); 40 CFR 52.02(a). Thus, in reviewing SIP submissions, the EPA's role is to approve state choices, provided that they meet the criteria of the CAA. Accordingly, this action merely proposes to approve state law as meeting Federal requirements and does not impose additional requirements beyond those imposed by state law. For that reason, this action:

- Is not a ''significant regulatory action'' subject to review by the Office of Management and Budget under Executive Orders 12866 (58 FR 51735, October 4, 1993) and 13563 (76 FR 3821, January 21, 2011);
- Does not impose an information collection burden under the provisions of the Paperwork Reduction Act (44 U.S.C. 3501 *et seq.*);
- Is certified as not having a significant economic impact on a substantial number of small entities under the Regulatory Flexibility Act (5 U.S.C. 601 *et seq.*);
- Does not contain any unfunded mandate or significantly or uniquely affect small governments, as described in the Unfunded Mandates Reform Act of 1995 (Pub. L. 104–4);
- Does not have Federalism implications as specified in Executive Order 13132 (64 FR 43255, August 10, 1999);
- Is not an economically significant regulatory action based on health or safety risks subject to Executive Order 13045 (62 FR 19885, April 23, 1997);
- Is not a significant regulatory action subject to Executive Order 13211 (66 FR 28355, May 22, 2001);
- Is not subject to requirements of section 12(d) of the National Technology Transfer and Advancement Act of 1995 (15 U.S.C. 272 note) because application of those requirements would be inconsistent with the CAA; and
- Does not provide EPA with the discretionary authority to address, as appropriate, disproportionate human health or environmental effects, using practicable and legally permissible methods, under Executive Order 12898 (59 FR 7629, February 16, 1994).

In addition, the SIP is not approved to apply on any Indian reservation land or in any other area where EPA or an Indian tribe has demonstrated that a tribe has jurisdiction. In those areas of Indian country, the proposed rule does not have tribal implications and will not impose substantial direct costs on tribal governments or preempt tribal law as specified by Executive Order 13175 (65 FR 67249, November 9, 2000).

List of Subjects in 40 CFR Part 52

Environmental protection, Air pollution control, Carbon monoxide, Greenhouse gases, Incorporation by reference, Intergovernmental relations, Lead, Nitrogen dioxide, Ozone, Particulate matter, Reporting and recordkeeping requirements, Sulfur oxides, Volatile organic compounds.

Authority: 42 U.S.C. 7401 *et seq.*

Dated: June 26, 2022.

KC Becker,

Regional Administrator, Region 8.

[FR Doc. 2022–14050 Filed 6–29–22; 8:45 am]

BILLING CODE 6560–50–P

214, R307–410–5, and R307–500 series rules through withdraw of these submittals.

[5] *See* Delegations of Authority for NSPS and NESHAP Standards to States and Tribes in Region 8, *https://www.epa.gov/air-quality-implementation-plans/delegations-authority-nsps-and-neshap-standards-states-and-tribes.*

DEPARTMENT OF TRANSPORTATION

Office of the Secretary

49 CFR Part 40

[Docket DOT–OST–2022–0037]

Department of Transportation Drug and Alcohol Testing Data

AGENCY: Office of the Secretary, Transportation (DOT).

ACTION: Request for information.

SUMMARY: In March 2021, the Government Accountability Office (GAO) published a report titled ''DOT Has Taken Steps to Verify and Publicize Drug and Alcohol Testing Data but Should Do More.'' The report examines how the Department of Transportation (DOT) uses drug and alcohol testing data, how DOT verifies that data are reliable, and whether DOT follows key actions for transparently reporting drug and alcohol testing data. The drug and alcohol testing data are primarily used by the DOT modal administrations and the United States Coast Guard (USCG) to determine the random testing rate(s) for safety-sensitive employees in each industry each year. In response to a recommendation from the GAO Report, DOT requests information from potential users in the public to determine if there is a broader audience for the public data, consistent with key actions for open government data.

DATES: Comments on this notice must be received on or before August 1, 2022.

ADDRESSES: You may submit comments identified by Docket Number DOT–OST–2022–0037 using any of the following methods:

- *Federal eRulemaking Portal:* Go to *https://www.regulations.gov/docket/*

DOT-OST-2022-0037/document. Follow the online instructions for submitting comments.

- *Mail:* Docket Management Facility, U.S. Department of Transportation, 1200 New Jersey Avenue SE, West Building, Ground Floor, Room W12–140, Washington, DC 20590–0001.
- *Hand Delivery or Courier:* West Building, Ground Floor, Room W12–140, 1200 New Jersey Avenue SE, Washington, DC, between 9 a.m. and 5 p.m. ET, Monday through Friday, except Federal holidays.
- *Fax:* 202–493–2251.

To avoid duplication, please use only one of these methods. See the ''Public Participation and Request for Comments'' portion of the **SUPPLEMENTARY INFORMATION** section for instructions on submitting comments, including collection of information comments for the Office of Information and Regulatory Affairs, OMB.

FOR FURTHER INFORMATION CONTACT: Mike Huntley, Office of Drug and Alcohol Policy and Compliance, 1200 New Jersey Avenue SE, Washington, DC 20590; telephone number 202–366–3784; *ODAPCwebmail@dot.gov.* If you have questions on viewing or submitting material to the docket, contact Docket Services, telephone (202) 366–9826.

SUPPLEMENTARY INFORMATION:

Background

DOT Drug and Alcohol Testing Program Overview

Safety is the top priority of DOT. A cornerstone of our safety policy is ensuring that transportation providers across all modes—on roads, rails, water, or in the air, over land and underground—employ operators who do not use illicit drugs or misuse alcohol. The Department works towards deterring the use of illicit drugs and the misuse of alcohol in the transportation industries, and creating prevention and treatment opportunities for transportation employers and employees.

Since 1988, DOT has regulated the process by which employers in the different transportation industries (aviation, trucking, rail, transit, pipeline, and maritime) must test their employees for drug and alcohol use. Nearly 6 million people performing safety sensitive transportation jobs are covered by the DOT drug and alcohol regulations, including pilots and flight attendants, truck drivers, subway operators, ship captains, pipeline controllers, aircraft mechanics, locomotive engineers, bus drivers, and others. The DOT regulations govern the drug and alcohol testing process for pre-employment, random, post-accident, reasonable suspicion/cause, and required testing after an employee returns to work after failing or refusing a test. More than 6 million drug and alcohol tests are conducted each year under the DOT program.

History of DOT Drug and Alcohol Testing Program

DOT first published its drug testing procedures regulation, 49 CFR part 40 (''part 40''), on November 21, 1988 (53 FR 47002) as an interim final rule. The rule was based on the Department of Health and Human Services (HHS) guidelines for Federal agency employee drug testing (53 FR 11790; April 11, 1988), with some changes to fit the transportation workplace. DOT published a final rule responding to comments on the interim rule a year later (54 FR 49854; December 1, 1989), that included, among other things, a provision for a 5-panel drug test for cocaine, marijuana, phencyclidine, amphetamines, and opiates.

Under the Omnibus Transportation Employee Testing Act (OTETA) of 1991, codified at 49 U.S.C. 45102 and 45104 (aviation industry testing), 49 U.S.C. 20140 (rail), 49 U.S.C. 31306 (motor carrier), and 49 U.S.C. 5331 (transit), DOT was required to implement alcohol testing programs in various transportation industries.[1] In response to OTETA, DOT added alcohol testing procedures to part 40 in a final rule published on February 15, 1994 (59 FR 7340).

While there have been periodic updates to part 40 over the years, the DOT drug and alcohol testing requirements have remained fundamentally the same since the time that they were first established as noted above.

Part 40 is a DOT-wide regulation that prescribes how drug and alcohol testing is conducted, who is authorized to participate in the drug and alcohol testing program, and what employees must do before they may return to duty following a drug and/or alcohol violation. In addition, the Federal Aviation Administration (FAA), the Federal Motor Carrier Safety Administration (FMCSA), the Federal Railroad Administration (FRA), the Federal Transit Administration (FTA), the Pipeline and Hazardous Materials Administration (PHMSA), and the USCG have each established specific regulations that spell out their prohibitions on drug use and alcohol misuse, who is subject to the regulations, what testing is authorized, when testing is authorized, and the consequences for violating the drug and alcohol testing regulations. The DOT modal administrations and the USCG incorporate part 40 into their regulations and enforce compliance of their respective regulations.

At the present time, only urine specimens are authorized for use in DOT drug testing.[2] These urine specimens are collected by a qualified collector and sent to a laboratory certified by the HHS National Laboratory Certification Program for screening and confirmation. DOT requires testing for (1) marijuana, (2) cocaine, (3) opioids (codeine, morphine, heroin, hydrocodone, hydromorphone, oxycodone, oxymorphone), (4) phencyclidine (PCP), and (5) amphetamines, methamphetamines, and methylenedioxymethamphetamine (MDMA). Alcohol testing involves analyzing breath or saliva specimens for initial (screening) tests, and breath specimens for confirmation tests. The breath/saliva specimen is collected by a qualified Breath Alcohol Technician or Screening Test Technician (as appropriate) and analyzed by an alcohol testing device approved by the National Highway Traffic Safety Administration.

Drug and Alcohol Testing Management Information System (MIS) Data

Employers subject to DOT or USCG drug and alcohol testing regulations must submit annual drug and alcohol testing data as required by their respective DOT modal administration or the USCG (see 49 CFR 40.26). When submitting drug and alcohol testing data, employers are required to use the standardized, one-page ''Drug and Alcohol Testing MIS Data Collection Form'' (MIS Form) provided in Appendix H to part 40.[3] FAA, FMCSA, FRA, FTA, and USCG now permit (and prefer) employers to submit the required drug and alcohol testing data electronically, while PHMSA requires the required data be submitted electronically.

An employer collects and compiles drug and alcohol testing data generated throughout the year by their company's drug and alcohol testing program, and

[1] OTETA also directed other changes to DOT's substance abuse-related programs for most transportation industries that the Department regulates. With respect to drug testing procedures, the Act added a requirement for using the ''split sample'' approach to testing which Congress believed would provide an additional safeguard for employees.

[2] DOT published a notice of proposed rulemaking on February 28, 2022 [87 FR 11156] that proposes to add oral fluid specimens to part 40 for use in the DOT drug testing program.

[3] A copy of the MIS Form has been placed in the docket for this notice.

submits that data in its annual filing of the MIS Form. Specifically, for each employee category, an employer is required to provide (1) drug testing data (number of verified negative tests, verified positive tests (for each drug), refusal to test results (adulterated, substituted, shy bladder, others), and cancelled results), and (2) alcohol testing data (number of screening tests above and below 0.02, number of confirmation tests above and below 0.04, refusal to test results (shy lung, others) and cancelled results) for each type of test conducted (*e.g.,* pre-employment, random, post-accident, reasonable suspicion/cause, return-to-duty, or follow-up).

The employer must complete the MIS Form and certify that the information is accurate. The annual drug and alcohol testing data submitted for a specific calendar year is to be submitted by March 15th of the following calendar year. The completed MIS Form contains only aggregate data, and does not contain any employee-specific information.

How the MIS Data Is Used

The DOT modal administrations and the USCG use the drug and alcohol MIS testing data primarily to determine the random testing rate(s) for safety-sensitive employees in each industry for subsequent years.[4] Specifically, each DOT modal administration and the USCG uses the random drug testing positive/refusal rate and the random alcohol testing violation rate, as applicable and respectively, from the prior year to determine the random testing rate in the following calendar year.

All five of the modal administrations and USCG require their regulated employers to conduct random drug tests. Their respective regulations provide that the minimum annual percentage rate for random drug testing for the industry will be either 25 or 50 percent, depending on the industry-wide random drug testing positive/refusal rate reported for the previous calendar year or years. For example, if the random drug testing positive/refusal rate is at or above 1 percent, then the modal administration or USCG will increase the minimum annual percentage rate for random drug testing for the following year to 50 percent or make no adjustment if it is already at 50 percent. If the minimum annual percentage rate for random drug testing is at 50 percent and the positive/refusal rate is less than 1 percent for 2 consecutive years, then the DOT modal administration or USCG has the discretion to lower the minimum annual percentage rate for random drug testing to 25 percent for the following year. For 2022, the minimum annual percentage rate for random drug testing is set at 50 percent for three DOT modal administrations (FMCSA, FTA, and PHMSA) and the USCG, and at 25 percent for FAA and FRA (both for FRA maintenance-of-way (MOW) employees and FRA covered service employees).[5]

Four of the five DOT modal administrations require random alcohol testing (FRA, FAA, FMCSA, and FTA).[6] Their respective regulations provide that the minimum annual percentage rate for random alcohol testing for the industry will be 10, 25, or 50 percent. These DOT modal administrations adjust this alcohol testing rate for safety-sensitive employees based on their respective industry-wide random alcohol testing violation rate reported for the previous calendar year or years. For example, regardless of whether the random testing rate is 50, 25, or 10 percent, if the violation rate is 1 percent or more for a year, then the modal administration will increase the alcohol testing rate for the next year to 50 percent, or make no adjustment if it is already at 50 percent. The 2022 random alcohol testing rate is 10 percent for all four modal administrations.[7]

The DOT modal administrations and the USCG publish annual notices in the **Federal Register** that outline the prior years' positive/refusal rates or alcohol violation rates, as relevant, and state the minimum annual percentage rate(s) for random testing for the next calendar year.[8] The minimum annual percentage rate for random testing is the specified minimum percentage of safety-sensitive employees that employers must randomly select and test throughout the calendar year. Employers may select and test at a higher rate but must select and test at the minimum mandatory rate to comply with the respective modal regulations.

Support for Patients and Communities Act

Federal Bill H.R. 6., the ''Substance Use-Disorder Prevention that Promotes Opioid Recovery and Treatment for Patients and Communities Act'' (the ''SUPPORT Act'') was signed into law on October 24, 2018.

Drug and Alcohol Testing MIS Database

Section 8103 of the SUPPORT Act, titled ''Department of Transportation Public Drug and Alcohol Testing Database'' required DOT to, not later than March 31, 2019, establish and make publicly available on its website a database of the drug and alcohol testing data reported by employers for each mode of transportation, and update the database annually. Specifically, for each mode of transportation, the database must include (1) the total number of drug and alcohol tests by type of substance tested; (2) the drug and alcohol test results by type of substance tested; (3) the reason for the drug or alcohol test, such as preemployment, random, post-accident, reasonable suspicion or cause, return-to-duty, or follow-up, by type of substance tested; and (4) the number of individuals who refused testing.

In response to the above, DOT published aggregated data from its internal database on its website in March 2019 for each mode (*i.e.,* FRA, FAA, FMCSA, FTA, and PHMSA) and the USCG by substances tested (drugs or alcohol), by reason for testing, and by year (2003 through 2018). The database has since been updated annually to include the most recent available data for 2019 and 2020. The database may be accessed at *https://www.transportation.gov/odapc/DOT_Agency_MIS_Data.* The database does not contain any personally identifiable information.

GAO Report on DOT's Collection and Use of Drug and Alcohol Testing Data

Section 8104 of the SUPPORT Act, titled ''GAO Report on Department of Transportation's Collection and Use of Drug and Alcohol Testing Data,'' required GAO, not later than 2 years after the date the DOT public drug and alcohol testing database was established under Section 8103 of the Act, to (1) review the DOT drug and alcohol testing MIS, and (2) submit to the Committee on Commerce, Science, and Transportation of the Senate and the Committee on Transportation and Infrastructure of the House of Representatives a report on the review. The GAO Report was required to include (1) a description of the process DOT uses to collect and record drug and alcohol testing data submitted by employers for each mode of transportation, (2) an assessment of whether and if so, how DOT uses the data in carrying out its responsibilities,

[4] In addition to using drug and alcohol testing data to calculate the annual random testing rate, DOT has periodically used that data to target educational outreach to the industry.

[5] See *https://www.transportation.gov/odapc/random-testing-rates.*

[6] PHMSA and the USCG do not require random alcohol testing.

[7] See *https://www.transportation.gov/odapc/random-testing-rates.*

[8] FMCSA only publishes a **Federal Register** notice if its testing rate changes.

and (3) an assessment of the DOT public drug and alcohol testing database required under the Act. The Report was to include recommendations regarding how DOT can best use the drug and alcohol testing data, any improvements that could be made to the process by which the data is collected from employers, and whether and, if so, how the DOT drug and alcohol testing database could be made more effective.

Pursuant to the above, GAO conducted a performance audit on the DOT drug and alcohol testing data from October 2019 to March 2021. In conducting the audit, GAO reviewed relevant laws and regulations, among other things. To determine how DOT verifies that data are reliable, GAO reviewed documents, analyzed data in the DOT internal database from calendar years 2003 through 2018, and interviewed DOT officials. GAO also reviewed the DOT public website and compared it to key actions for open government data.

In March 2021, GAO published a report titled ''DOT Has Taken Steps to Verify and Publicize Drug and Alcohol Testing Data but Should Do More.'' [9] The report examines (1) how DOT uses drug and alcohol testing data, (2) how DOT verifies that data are reliable, and (3) whether DOT follows key actions for transparently reporting drug and alcohol testing data.

GAO made three recommendations to DOT [10] as follows:

(1) ''The Secretary of Transportation should direct the Administrators of FAA, FMCSA, FRA, FTA, and PHMSA to: (1) evaluate the different processes used by each modal administration to verify drug and alcohol testing data—including comparing data to records during inspections, checking data for errors manually or with software, and contacting employers that do not submit a report or submit an incomplete report—and (2) determine what, if any, additional steps should be taken to improve the reliability of the information. (Recommendation 1)''

(2) ''The Director of ODAPC should disclose known limitations of drug and alcohol testing data on DOT's website, consistent with key actions for open government data. (Recommendation 3)''

(3) ''The Director of ODAPC should reach out to potential users in the public to determine if there is a broader audience for the public data, consistent with key actions for open government data, and if a broader audience is identified, engage with users to evaluate the benefits and costs of adopting additional key actions for open government data and any other possible improvements to the website. (Recommendation 4)''

Regarding Recommendation 3 and Recommendation 4, GAO found that DOT's drug and alcohol testing website, which DOT published in March 2019 as required by the SUPPORT for Patients and Communities Act, follows eight of 16 key actions that GAO has previously identified for transparently reporting government data. However, GAO found that DOT does not fully follow eight other key actions for transparently reporting data on the drug and alcohol testing website, including: (1) disclosing known data limitations (Recommendation 3) and (2) reaching out to potential users in the public to encourage data use (Recommendation 4). In addition, GAO stated that ''DOT currently does not follow or partially follows six other key actions that may improve the website. However, the immediate benefits and costs of following these six actions are unclear because DOT has not reached out to users to determine if the value of making changes to the website outweigh the time and resources necessary to implement them.''

Specifically with respect to Recommendation 4, GAO found that while DOT's Office of Drug and Alcohol Policy and Compliance (ODAPC) ''does discuss the modal administrations' drug and alcohol testing programs at industry conferences, it does not discuss the public drug and alcohol testing data.'' In addition to being a key action identified by GAO, the OPEN Government Data Act [11] requires agencies to develop a plan to allow for collaboration with non-government entities, including businesses, researchers, and the public, for the purpose of understanding how data users value and use government data.

GAO stated that '' potential users in the public may not be aware of the website or potential uses of the data. For example, if aware that the information is now publicly available, a motor carrier employer could use the public drug and alcohol testing data to understand how that individual employer's drug and alcohol testing results compare to industry-wide results. However, because ODAPC has not identified or reached out to potential users in the public, officials cannot be certain the public is not interested in the data. As a result, DOT does not know whether the website meets the requirements for transparently providing data, or if additional improvements could make this a more valuable resource for users.''

DOT Actions in Response to the GAO Report

DOT concurred with each of the recommendations above.

Recommendations 1 and 3

In response to Recommendation 1, DOT has committed to take action to implement the steps recommended by GAO. Each operating administration plans to conduct a review of its drug and alcohol data collection process to identify additional process improvements, if any, that should be taken to improve the reliability of the information it collects. DOT expects to complete this action by June 30, 2022.

In response to Recommendation 3, ODAPC posted the known data limitations for FRA and FMCSA on the drug and alcohol testing website in February 2022, beginning with the 2020 data.

Recommendation 4

In response to Recommendation 4, ODAPC has discussed the availability of the public drug and alcohol testing data on the DOT website at numerous industry and government conferences and training sessions, including at meetings of (1) the American Association of Medical Review Officers, (2) the Drug and Alcohol Testing Industry Association, (3) the Substance Abuse Program Administrators Association, (4) HHS's Substance Abuse and Mental Health Services Administration's Drug Testing Advisory Board, and (5) the FTA's annual drug and alcohol conference.[12]

In addition, and consistent with the requirements of the OPEN Government Data Act, DOT is publishing this Request for Information to (1) increase awareness regarding the availability of the drug and alcohol testing data on the DOT website, and (2) collaborate with, and solicit input from, non-governmental entities such as stakeholders, researchers, and the public to better understand how those users may value and use the drug and alcohol testing data that is publicly available on the website.

[9] A copy of the GAO Report (Report GAO–21–296) has been placed in the Docket for this notice.

[10] GAO's Recommendation 2 applies to the USCG only, and not to DOT.

[11] The Open, Public, Electronic and Necessary Government Data Act of 2018 (OPEN Government Data Act) is Title II of the Foundations for Evidence-Based Policymaking Act of 2018 (Evidence Act).

[12] In addition to the actions taken by ODAPC, as required by GAO Recommendation 4, individual DOT modes have also discussed the availability of the public drug and alcohol testing data during presentations to industry groups.

Importantly, open government data only create value to the extent that they are used. GAO—in a separate report [13]—has identified three key actions for engaging with users:

(1) *Identify data users and their needs.* By identifying who is using the data and what content or features are important to them, data providers can better prioritize their efforts to present information to data consumers. From this:

a. DOT requests information regarding what entities use the drug and alcohol testing data on the DOT website.

b. DOT requests information regarding how those entities use the drug and alcohol testing data on the DOT website.

(2) *Solicit and be responsive to user feedback.* Soliciting and being responsive to user feedback—both when a website is being developed and on an ongoing basis—can help ensure that the website meets users' needs. Feedback can also surface issues with the functionality of the website, thus enabling the data provider to make corrections when needed. From this:

a. DOT requests information regarding the functionality of the DOT drug and alcohol testing data website, and whether users have specific recommendations regarding possible improvements to the website that would enhance the user's ability to use the available data.

(3) *Reach out to potential users to encourage data use.* Actively engaging potential users can provide an opportunity to educate them on how the data can be appropriately used and encourage innovation. From this:

a. DOT primarily uses the drug and alcohol testing data to determine the random testing rate for safety-sensitive employees in each industry for the following year, and also sometimes to target educational outreach to the industry. DOT requests information regarding whether users envision other appropriate uses for the drug and alcohol testing data on the DOT website.

Conclusion

GAO noted that DOT's drug and alcohol testing website follows eight of 16 key actions that GAO has previously identified for transparently reporting government data. Two others—disclosing known data limitations and reaching out to the public—are addressed through the specific GAO recommendations discussed above. While GAO noted that DOT does not fully follow six other key actions that could improve its drug and alcohol testing website, GAO noted that the potential benefits and costs of following those six actions are unclear because DOT has not reached out to potential users. GAO stated that ''With a better understanding of potential needs and uses of the data, DOT would be able to determine whether implementing these actions would provide benefits consistent with any implementation costs.''

DOT will review and evaluate the comments received from potential users that are submitted in response to this notice. If a broader audience for the drug and alcohol testing data is identified, DOT will engage with users to evaluate the benefits and costs of adopting additional key actions for open government data and any other possible improvements to the website.

DOT seeks input on the questions set forth above and welcomes comments from all interested parties.

Bohdan S. Baczara,

Deputy Director, Office of Drug and Alcohol Policy and Compliance.

[FR Doc. 2022–13985 Filed 6–29–22; 8:45 am]

BILLING CODE P

[13] GAO Report GAO–19–72, titled ''Treasury Could Better Align *USAspending.gov* with Key Practices and Search Requirements.''

Notices

Federal Register

Vol. 87, No. 125

Thursday, June 30, 2022

This section of the FEDERAL REGISTER contains documents other than rules or proposed rules that are applicable to the public. Notices of hearings and investigations, committee meetings, agency decisions and rulings, delegations of authority, filing of petitions and applications and agency statements of organization and functions are examples of documents appearing in this section.

DEPARTMENT OF AGRICULTURE

U.S. Codex Office

[Docket No. USDA–2022–XXXX]

International Standard-Setting Activities

AGENCY: Trade and Foreign Agricultural Affairs (TFAA), USDA.

ACTION: Notice.

SUMMARY: This notice informs the public of the sanitary and phytosanitary (SPS) standard-setting activities of the Codex Alimentarius (Codex), in accordance with section 491 of the Trade Agreements Act of 1979, as amended, and the Uruguay Round Agreements Act. This notice also provides a list of other standard-setting activities of Codex, including commodity standards, guidelines, codes of practice, and revised texts. This notice, which covers Codex activities during the time periods from June 21, 2021 to May 31, 2022 and June 1, 2022 to May 31, 2023, seeks comments on standards under consideration and recommendations for new standards.

ADDRESSES: The U.S. Codex Office (USCO) invites interested persons to submit their comments on this notice. Comments may be submitted by one of the following methods:

- *Federal e-Rulemaking Portal:* This website provides the ability to type short comments directly into the comment field on this web page or attach a file for lengthier comments. Go to *http://www.regulations.gov.* Follow the on-line instructions at the website for submitting comments.
- *Mail:* Send to Docket Clerk, U.S. Department of Agriculture, Trade and Foreign Agricultural Affairs, 1400 Independence Avenue SW, Mailstop S4861, Washington, DC 20250–3700.
- *Hand- or courier-delivered submittals:* Deliver to 1400 Independence Avenue SW, Room 4861, Washington, DC 20250–3700.

Instructions: All items submitted by mail or email are to include the Agency name and docket number USDA–2022–XXXX. Comments received in response to this docket will be made available for public inspection and posted without change, including any personal information to *http://www.regulations.gov.*

Please state that your comments refer to Codex. If your comments relate to specific Codex committees, please identify the committee(s) in your comments and submit a copy of your comments to the delegate for that committee.

Docket: For access to background documents or comments received, call (202) 205–7760 to schedule an appointment.

FOR FURTHER INFORMATION CONTACT: Ms. Mary Frances Lowe, United States Manager for Codex Alimentarius, U.S. Department of Agriculture, Office of the Under Secretary for Trade and Foreign Agricultural Affairs, U.S. Codex Office, 1400 Independence Avenue SW, Room 4861, Washington, DC 20250–3700; Telephone: +1 (202) 205–7760; Email: *uscodex@usda.gov.*

For information pertaining to committees, contact the delegate for that committee. A complete list of U.S. delegates and alternate delegates is accessible via the internet at: *https://www.usda.gov/sites/default/files/documents/us-codex-program-officials.pdf.* Documents pertaining to Codex and specific committee agendas are accessible via the internet at *http://www.fao.org/fao-who-codexalimentarius/meetings/en/.* The U.S. Codex Office (USCO) also maintains a website at *http://www.usda.gov/codex,* a link that also offers an email subscription service providing access to information related to Codex. Customers can add or delete their subscription themselves and have the option to password protect their accounts.

SUPPLEMENTARY INFORMATION:

Background

The World Trade Organization (WTO) was established on January 1, 1995, as the common international institutional framework for the conduct of trade relations among its members in matters related to the Uruguay Round Trade Agreements. The WTO is the successor organization to the General Agreement on Tariffs and Trade (GATT). United States membership in the WTO was approved and the Uruguay Round Agreements Act (Uruguay Round Agreements) was signed into law by the President on December 8, 1994, Public Law 103–465, 108 Stat. 4809. The Uruguay Round Agreements became effective, with respect to the United States, on January 1, 1995. The Uruguay Round Agreements Act amended the Trade Agreements Act of 1979. Pursuant to section 491 of the Trade Agreements Act of 1979, as amended, the President is required to designate an agency to be ''responsible for informing the public of the sanitary and phytosanitary (SPS) standard-setting activities of each international standard-setting organization'' (19 U.S.C. 2578). The main international standard-setting organizations are the Codex Alimentarius (Codex), the World Organisation for Animal Health (OIE), and the International Plant Protection Convention (IPPC). The President, pursuant to Proclamation No. 6780 of March 23, 1995, (60 FR 15845), designated the U.S. Department of Agriculture as the agency responsible for informing the public of the SPS standard-setting activities of each international standard-setting organization. The Secretary of Agriculture has delegated to the Trade and Foreign Agricultural Affairs Mission Area the responsibility to inform the public of the SPS standard-setting activities of Codex. The Trade and Foreign Agricultural Affairs Mission Area has, in turn, assigned the responsibility for informing the public of the SPS standard-setting activities of Codex to the U.S. Codex Office (USCO).

Codex was created in 1963 by two United Nations organizations, the Food and Agriculture Organization (FAO) and the World Health Organization (WHO). Codex is the principal international organization for establishing standards for food. Through adoption of food standards, codes of practice, and other guidelines developed by its committees and by promoting their adoption and implementation by governments, Codex seeks to protect the health of consumers, ensure fair practices in the food trade, and promote coordination of food standards work undertaken by international governmental and nongovernmental organizations. In the United States, U.S. Codex activities are

managed and carried out by the United States Department of Agriculture (USDA); the Food and Drug Administration (FDA), Department of Health and Human Services (HHS); the National Oceanic and Atmospheric Administration (NOAA), Department of Commerce (DOC); and the Environmental Protection Agency (EPA).

As the agency responsible for informing the public of the SPS standard-setting activities of Codex, the USCO publishes this notice in the **Federal Register** annually. Attachment 1 (Sanitary and Phytosanitary Activities of Codex) sets forth the following information:

1. The SPS standards under consideration or planned for consideration; and

2. For each SPS standard specified:

a. A description of the consideration or planned consideration of the standard

b. Whether the United States is participating or plans to participate in the consideration of the standard

c. The agenda for United States participation, if any; and

d. The agency responsible for representing the United States with respect to the standard.

To obtain copies of the standards listed in Attachment 1, please contact the U.S. delegate or the U.S. Codex Office.

This notice also solicits public comment on standards that are currently under consideration or planned for consideration and recommendations for new standards. The U.S. delegate, in conjunction with the responsible agency, will take the comments received into account in participating in the consideration of the standards and in proposing matters to be considered by Codex.

The U.S. delegate will facilitate public participation in the United States Government's activities relating to Codex. The U.S. delegate will maintain a list of individuals, groups, and organizations that have expressed an interest in the activities of the Codex committees and will disseminate information regarding U.S. delegation activities to interested parties. This information will include the status of each agenda item; the U.S. Government's position or preliminary position on the agenda items; and the time and place of planning meetings and debriefing meetings following the Codex committee sessions. In addition, the USCO makes much of the same information available through its web page at *http://www.usda.gov/codex.* If you would like to access or receive information about specific committees, please visit the web page or notify the appropriate U.S. delegate or the U.S. Codex Office, Room 4861, 1400 Independence Avenue SW, Washington, DC 20250–3700 (*uscodex@usda.gov*).

The information provided in Attachment 1 describes the status of Codex standard-setting activities by the Codex committees for the time periods from June 21, 2021 to May 31, 2022 and June 1, 2022 to May 31, 2023. A list of forthcoming Codex sessions may be found at: *http://www.codexalimentarius.org/meetings-reports/en/.*

Additional Public Notification

Public awareness of all segments of rulemaking and policy development is important. Consequently, the USCO will announce this **Federal Register** publication on-line through the U.S. Codex web page located at: *https://www.federalregister.gov/agencies/us-codex-office.*

Done at Washington, DC.

Mary Frances Lowe,

U.S. Manager for Codex Alimentarius.

Attachment 1

Sanitary and Phytosanitary Activities of Codex

Codex Alimentarius Commission and Executive Committee

The Codex Alimentarius Commission (Commission or CAC) convened its 44th Session (CAC44) virtually from November 8–15 and 17–18, 2021, with report adoption taking place on December 14, 2021. The relevant document is REP21/CAC. The actions taken by the Commission at CAC44 (*e.g.,* adoption, revocation, approval of new work, discontinuation of work, amendments, etc.) are described below under the respective Codex Committees/Task Force.

The Commission is scheduled to convene for its 45th Session (CAC45) on November 21–25, 2022, with report adoption taking place on December 13, 2022. At its 45th Session, the Commission will consider adopting standards recommended by committees at Step 8 or 5/8 (final adoption) and advance the work of committees by adopting draft standards at Step 5 (for further comment and consideration by the relevant committee). The Commission will also consider revocation of Codex texts; proposals for new work; discontinuation of work; amendments to Codex standards and related texts; and matters arising from the Reports of the Commission, the Executive Committee, and subsidiary bodies. Although the agenda for the 45th Session is not yet available, it is expected that the Commission will also consider Codex budgetary and financial matters; FAO/WHO scientific support to Codex (activities, budgetary and financial matters); matters arising from FAO/WHO; reports of side events; election of the chairperson and vice-chairpersons and members of the Executive Committee elected on a geographical basis; designation of countries responsible for appointing the chairpersons of Codex subsidiary bodies; any other business; and adoption of the report.

The Executive Committee (CCEXEC) convened its 81st Session (CCEXEC81) virtually from October 28 to November 5, 2021. The relevant document is REP21/EXEC2. In addition to making recommendations to CAC44 on the work of Codex Committees/Task Forces, CCEXEC81 discussed the impact of the pandemic on the activities of Codex Alimentarius; the Codex Strategic Plan 2020–2025; and the application of the *Statements of Principle concerning the Role of Science in the Codex decision-making process and the extent to which other factors are taken into account.*

Before the CAC45, CCEXEC is scheduled to convene twice virtually, due to COVID–19 related issues. The 82nd Session of CCEXEC is scheduled to convene June 20–30, 2022 and its 83rd Session is scheduled to convene November 14–18, 2022. CCEXEC is composed of the Commission chairperson; vice-chairpersons; seven members elected by the Commission from each of the following geographic regions: Africa, Asia, Europe, Latin America and the Caribbean, Near East, North America, and South-West Pacific; and regional coordinators from the six regional coordinating committees. The United States will participate as an advisor to Canada, the member elected on a geographical basis for North America.

At its 82nd Session, the Executive Committee will report on the work of the sub-committee on the application of the Statements of Principle concerning the role of science, and the sub-committee on new food sources and production systems. The Executive Committee will also consider the following agenda items: model for future Codex work, applications from international non-governmental organizations for observer status in Codex, review of international non-governmental organizations with observer status in Codex, Codex Strategic Plan 2020–2025, and the 60th anniversary of the Codex Alimentarius Commission: 1963–2023. The Executive

Committee agenda for the 83rd Session is not yet available.

Responsible Agency: USDA/TFAA/USCO.

U.S. Participation: Yes.

Codex Committee on Contaminants in Foods

The Codex Committee on Contaminants in Foods (CCCF) establishes or endorses permitted maximum levels (MLs)or guideline levels (GLs) for contaminants and naturally occurring toxicants in food and feed; prepares priority lists of contaminants and naturally occurring toxicants for risk assessment by the Joint FAO/WHO Expert Committee on Food Additives (JECFA); considers and elaborates methods of analysis and sampling for the determination of contaminants and naturally occurring toxicants in food and feed; considers and elaborates standards or codes of practice for related subjects; and considers other matters assigned to it by the Commission in relation to contaminants and naturally occurring toxicants in food and feed.

The Committee had the following items which were considered by the 44th Session of the Codex Alimentarius Commission in November 2021.

Adopted at Step 8 or Step 5/8 (final adoption):

- MLs for cadmium in chocolates containing or declaring <30% cocoa solid on a dry matter basis
- MLs for cadmium in chocolates containing or declaring ≥30% to <50% total cocoa solid on a dry matter basis
- Revision of the *Code of Practice for the Prevention and Reduction of Lead Contamination in Foods* (CXS 56–2004)
- Amendment to extend the MLs for lead in fruit juices and grape juice in the *General Standard for Contaminants in Food and Feed* (CXS 193–1995) to cover infants and young children

Approved as new work:

- MLs for methylmercury in orange roughy and pink cusk eel
- Code of Practice for the prevention and reduction of mycotoxin contamination in cassava and cassava-based products

The Committee convened its 15th Session virtually from May 9–13, 2022, with report adoption taking place on May 24, 2022. The relevant document is REP22/CF.

The Committee has the following items that will be considered by the 45th Session of the Commission.

To be considered for final adoption at Step 8 and Step 5/8:

- MLs for cadmium in cocoa powder (100% total cocoa solids on a dry matter basis)
- Code of practice for the prevention and reduction of cadmium contamination in cocoa beans
- MLs for methylmercury in certain fish species and associated sampling plan (orange roughy and pink cusk eel) MLs for lead in certain food categories (cereal-based products for infants and young children, white sugar, corn and maple syrups, honey, and sugar-based candies)
- MLs for total aflatoxins in maize grain, destined for further processing; flour meal, semolina and flakes derived from maize; husked rice; polished rice; sorghum grain, destined for further processing; cereal-based food for infants and young children (excluding foods for food aid programs); and cereal-based food for older infants and young children for food aid programs

The 16th Session of the CCCF (CCCF16) is scheduled to convene April 17–21, 2023. The CCCF16 agenda is currently unavailable, and we are unable to determine if CCCF16 will recommend adoptions or approvals at the 46th Session of The Codex Alimentarius Commission (CAC46).

The Committee is expected to continue working on:

- MLs for lead in remaining certain food categories (ready-to-eat meals for infants and young children, culinary herbs, dried spices, brown and raw sugars)
- Sampling plans for methylmercury in certain fish species and associated sampling plan (orange roughy and pink cusk eel)
- MLs for total aflatoxins in ready-to-eat peanuts and associated sampling plan
- MLs for total aflatoxins and ochratoxin A in nutmeg, dried chili and paprika, ginger, pepper, and turmeric and associated sampling plans
- Code of practice for prevention and reduction of mycotoxin contamination in cassava and cassava-based products
- Forward work plan for CCCF, including:
  - Review of staple food-contaminant combinations for future work of CCCF
- Review of Codex standards for contaminants
- Follow-up work to the outcomes of JECFA evaluations
- Priority list of contaminants for evaluation by JECFA

Responsible Agencies: HHS/FDA; USDA/Food Safety and Inspection Service (FSIS).

U.S. Participation: Yes.

Codex Committee on Fats and Oils

The Codex Committee on Fats and Oils (CCFO) is responsible for elaborating worldwide standards for fats and oils of animal, vegetable, and marine origin, including margarine and olive oil.

The 27th Session of the CCFO met virtually on October 18–22, 2021, with report adoption taking place on October 26, 2021. The relevant document is REP22/FO.

The Committee has the following items that will be considered by the 45th Session of the Commission.

To be considered for final adoption at Step 5/8:

- Proposed draft revision to the *Standard for Named Vegetable Oils* (CXS 210–1999): Essential composition of Sunflower seed oils

To be considered for approval as new work:

- Amendment/revision to the *Standard for Named Vegetable Oils* (CXS 210–1999) to include Camellia seed oil; Sacha inchi oil; High oleic acid soya bean oil
- Amendment/revision to the *Standard for Fish Oils* (CXS 329–2017) to include Calanus oil

The Committee is expected to continue working on:

- Proposed draft revision to the *Standard for Named Vegetable Oils* (CXS 210–1999): avocado oil
- Editorial amendments/changes to the Code of Practice for the Storage and Transport of Edible Fats and Oils in Bulk (CXC 36–1987): Appendix 2
- Mechanisms for revising the *Standard for Milk Fat Products* (CXS 280–1973)

Responsible Agencies: HHS/FDA/Center for Food Safety and Applied Nutrition (CFSAN); USDA/Agricultural Research Service (ARS).

U.S. Participation: Yes.

Codex Committee on Fish and Fishery Products

The Committee on Fish and Fishery Products (CCFFP) is responsible for elaborating standards for fresh, frozen, and otherwise processed fish, crustaceans, and mollusks. The 35th session of CCFFP is working by correspondence and the Committee is expected to complete their work by October 1, 2022.

The Committee is working by correspondence on:

- The *Standard for Canned Sardines and Sardine-Type Products* (CXS 94–1981) to consider inclusion of the fish species S. lemuru (Bali Sardinella) in the list of Sardinella species under section 2.1.

Responsible Agencies: HHS/FDA; DOC/NOAA/National Marine Fisheries Service (NMFS).

U.S. Participation: Yes.

Codex Committee on Food Additives

The Codex Committee on Food Additives (CCFA) establishes or endorses acceptable MLs for individual food additives; prepares a priority list of food additives for risk assessment by the JECFA; assigns functional classes to individual food additives; recommends specifications of identity and purity for food additives for adoption by the Codex Alimentarius Commission; considers methods of analysis for the determination of additives in food; and considers and elaborates standards or codes of practice for related subjects such as the labeling of food additives when sold as such.

The Committee convened its 52nd Session virtually from September 1–7, 2021, with report adoption taking place on September 10, 2021. The relevant document is REP21/FA.

The Committee had the following items which were considered by the 44th Session of the Codex Alimentarius Commission in November 2021.

Adopted at Step 8 (final adoption):

- Specifications for the Identity and Purity of Food Additives
- Revisions to adopted provisions of the *General Standard for Food Additives* (GSFA) (CXS 192–1995)
- Revision of the *Class Names and the International Numbering System for Food Additives* (CXG 36–1989)
- Changes related to the group header STEVIOL GLYCOSIDES in the GSFA (CXS 192–1995)
- Revised provisions of the GSFA in relation to the amendments to title and food category number for CXS 283–1978 in Annex C of the GSFA (CXS 192–1995)
- Revised food-additive provisions of the GSFA in relation to the partial alignment of CXS 249–2006, CXS 273–1968, CXS 275–1973 and CXS 288–1978 to include tamarind seed polysaccharide (INS 437)
- Revised food-additive provisions of the GSFA in relation to the linked entry for Food Category (FC) 12.5 in the References to Commodity Standards for GSFA Table 3 Additives in the Annex to Table 3
- Revised provisions of the GSFA for sweeteners in different food categories (CXS 192–1995)
- Revised food-additive sections of nine standards for milk and milk products, *i.e., Group Standards for Cheeses in Brine* (CXS 208–1999); *Unripened Cheese including Fresh Cheese* (CXS 221–2001); *Standards for a Blend of Evaporated Skimmed Milk and Vegetable Fat* (CXS 250–2006); *a Blend of Skimmed Milk and Vegetable Fat in Powdered Form* (CXS 251–2006); a *Blend of Sweetened Condensed Skimmed Milk and Vegetable Fat* (CXS 252–2006); *Standards for Cottage Cheese* (CXS 273–1968); *Cream Cheese* (CXS 275–1973); *Extra Hard Grating Cheese* (CXS 278–1978); and *General Standard for Cheese* (CXS 283–1978)
- Revised food-additive sections of six standards for fats and oils, *i.e.,* Standards for *Edible Fats and Oils not covered by Individual Standards* (CXS 19–1981); *Olive Oils and Olive Pomace Oils* (CXS 33–1981); *Named vegetable oils* (CXS 210–1999); *Named Animal Fats* (CXS 211–1999); *Fat Spreads and Blended Spreads* (CXS 256–2007); and *Fish Oils* (CXS 329–2017)
- Revised food-additive sections of three standards for spices and culinary herbs, *i.e., Standards for Black, White and Green Peppers* (CXS 326–2017); *Cumin* (CXS 327–2017); and *Dried Thyme* (CXS 328–2017)
- Amendments to *Standards for Bouillons and Consommés* (CXS 117–1981) and *Wheat Flour* (CXS 152–1985) due to alignment of methylate copolymer, basic (INS 1205)
- Inclusion of xanthan gum (INS 415) and pectins (INS 440) in FC 13.1.3 (''Formulae for special medical purposes for infants'') of the GSFA (CXS 192–1995)

The 53rd Session of the CCFA (CCFA53) is scheduled to convene March 27–31, 2023. The CCFA53 agenda is currently unavailable, and we are unable to determine if CCFA53 will recommend adoptions or approvals at CAC46.

The Committee is expected to continue working on:

- New proposed draft food additive provisions of the GSFA
- Technological justification for the use of mono and diglycerides of fatty acids (INS 471) as an antifoaming agent in products for deep frying conforming to the *Standard for Named Vegetable Oils* (CXS 210–1999) excluding virgin and cold-pressed oils
- Guideline on avoiding future divergence of food additive provisions in the GSFA with commodity standards
- Priority list of substances proposed for evaluation by JECFA
- Discussion paper on the food additive provision for the use of trisodium citrate in FC 01.1.1 ''Fluid milk (plain)''
- An administrative review of all adopted food additives provisions in the GSFA for additives with sweetener function but not associated with Note 161
- Discussion paper on mapping Food Categories of the GSFA to the FoodEx2 database
- Discussion paper on the use of certain food additives in wine production

Responsible Agency: HHS/FDA/CFSAN.

U.S. Participation: Yes.

Codex Committee on Food Hygiene

The Codex Committee on Food Hygiene (CCFH) is responsible for developing basic provisions on food hygiene, applicable to all food; considering and amending or endorsing provisions on food hygiene contained in Codex commodity standards and Codex codes of practice developed by other committees; considering specific food hygiene problems assigned to it by the Commission; suggesting and prioritizing areas where there is a need for microbiological risk assessment at the international level and developing questions to be addressed by the risk assessors; and considering microbiological risk management matters in relation to food hygiene and in relation to the FAO/WHO risk assessments.

The 52nd Session of the Committee (CCFH52) met virtually from February 28–March 4, 2022, with report adoption taking place on March 9, 2022. The relevant document is REP 22/FH.

The Committee has the following items that will be considered at the 45th Session of the Commission.

To be considered for final adoption at Step 8 and Step 5/8:

- Draft Guidelines for the Management of Biological Foodborne Outbreaks
- Proposed draft Decision Tree as an annex to the *General Principles of Food Hygiene* (CXC 1–1969)

The 53rd Session of the CCFH (CCFH53) is scheduled to convene from November 27–December 3, 2022. The CCFH53 agenda is currently unavailable, and we are unable to determine if CCFH53 will recommend adoptions or approvals at CAC46.

The Committee is expected to continue working on:

- Proposed Draft Guidelines for the Control of Shiga Toxin-Producing Escherichia coli (STEC) in Raw Beef, Raw Milk and Raw Milk Cheeses, Fresh Leafy Vegetables, and Sprouts
- Proposed Draft Guidelines for the Safe Use and Reuse of Water in Food Production
- Discussion paper on revision of the *Guidelines on the Application of General Principles of Food Hygiene to the Control of Pathogenic Vibrio Species in Seafood* (CXG 73–2010)
- Discussion paper on revision of the *Guidelines on the Application of*

General Principles of Food Hygiene to the Control of Viruses in Food (CXG 79–2012)

- New work proposals/forward workplan

Responsible Agencies: HHS/FDA/CFSAN; USDA/FSIS.

U.S. Participation: Yes.

Codex Committee on Food Import and Export Inspection and Certification Systems

The Codex Committee on Food Import and Export Inspection and Certification Systems (CCFICS) is responsible for developing principles and guidelines for food import and export inspection and certification systems, with a view to harmonizing methods and procedures that protect the health of consumers, ensure fair trading practices, and facilitate international trade in foodstuffs; developing principles and guidelines for the application of measures by the competent authorities of exporting and importing countries to provide assurance, where necessary, that foodstuffs comply with requirements, especially statutory health requirements; developing guidelines for the utilization, as and when appropriate, of quality assurance systems to ensure that foodstuffs conform with requirements and promote the recognition of these systems in facilitating trade in food products under bilateral/multilateral arrangements by countries; developing guidelines and criteria with respect to format, declarations, and language of such official certificates as countries may require with a view towards international harmonization; making recommendations for information exchange in relation to food import/export control; consulting as necessary with other international groups working on matters related to food inspection and certification systems; and considering other matters assigned to it by the Commission in relation to food inspection and certification systems.

The Committee had the following items which were considered by the 44th Session of the Codex Alimentarius Commission in November 2021.

Adopted at Step 8 or Step 5/8 (final adoption):

- Principles and Guidelines for the Assessment and Use of Voluntary Third-Party Assurance (vTPA) Programmes.
- Guidance on Paperless Use of Electronic Certificates (Revised *Guidelines for Design, Production, Issuance and Use of Generic Official Certificates* (CXG 38–2001)).

Approved as new work:

- Development of guidance on the prevention and control of food fraud

The 26th Session of the CCFICS is scheduled to convene from May 1–5, 2023. The CCFICS26 agenda is currently unavailable, and we are unable to determine if CCFICS26 will recommend adoptions or approvals at CAC46.

The Committee is expected to continue working on:

- Development of guidance on the prevention and control of food fraud
- Proposed draft guidelines on recognition and maintenance of equivalence of National Food Control Systems (NFCS)
- Proposed draft consolidated Codex guidelines related to equivalence
- Review and update the list of emerging global issues
- Discussion paper on ''Use of remote audit and verification in regulatory frameworks''
- Discussion paper on review and update of the *Principles for Traceability/Product Tracing as a Tool Within a Food Inspection and Certification System* (CXG 60–2006)

Responsible Agencies: USDA/FSIS; HHS/FDA/CFSAN.

U.S. Participation: Yes.

Codex Committee on Food Labelling

The Codex Committee on Food Labelling (CCFL) drafts provisions on labeling applicable to all foods; considers, amends, and endorses draft specific provisions on labeling prepared by the Codex Committees drafting standards, codes of practice, and guidelines; and studies specific labeling problems assigned to it by the Codex Alimentarius Commission. The Committee also studies problems associated with the advertisement of food with particular reference to claims and misleading descriptions.

The 46th Session of the Committee (CCFL46) met virtually from September 27–October 1, 2021, with report adoption taking place on October 7, 2021. The relevant document is REP 21/FL.

The Committee had the following items which were considered by the 44th Session of the Codex Alimentarius Commission in November 2021.

Adopted at Step 8 or Step 5/8 (final adoption):

- Draft *General Standard for the Labelling of Non-Retail Containers* (CXS 346–2021)
- Proposed Draft *Guidelines on Front of Pack Nutrition Labelling* (Annex 2 to the Codex *Guidelines on Nutrition Labelling* (CXG 2–1985))

Approved as new work:

- Discussion paper on guidance on innovation—use of technology in food labeling

The 47th Session of the CCFL (CCFL47) is scheduled to convene from May 15–19, 2023. The CCFL47 agenda is currently unavailable, and we are unable to determine if CCFL47 will recommend adoptions or approvals at CAC46.

The Committee is expected to continue working on:

- Proposed draft Guidelines on Internet Sales/E-Commerce
- Proposed draft revision to the Codex *General Standard for the Labelling of Prepackaged Foods* (CXS 1–1985): Provisions relevant to allergen labeling and proposed draft guidance on precautionary allergen labeling
- Discussion paper on guidance on innovation—use of technology in food labeling

Responsible Agencies: HHS/FDA/CFSAN; USDA/FSIS.

U.S. Participation: Yes.

Codex Committee on Fresh Fruits and Vegetables

The Codex Committee on Fresh Fruits and Vegetables (CCFFV) is responsible for elaborating worldwide standards and codes of practice, as may be appropriate, for fresh fruits and vegetables, consulting as necessary, with other international organizations in the standards development process to avoid duplication.

The Committee convened its 22nd Session virtually from April 25–29, 2022, with report adoption taking place on May 4, 2022. The relevant document is REP22/FFV.

The Committee has the following items that will be considered by the 45th Session of the Commission.

To be considered for final adoption at Step 5/8:

- Proposed draft standard for onions and shallots
- Proposed draft standard for berry fruits
- Proposed draft standard for fresh dates

To be considered for approval as new work:

- New standard for Castillo lulo
- New standard for fresh curry leaves
- Amendment to existing standard for bananas

In addition, the Committee agreed to the following item for internal use by the Committee:

- Glossary of terms used in the layout for Codex standards for fresh fruits and vegetables

The Committee is expected to continue working on:

- New work proposals

Responsible Agencies: USDA/Agricultural Marketing Service (AMS), HHS/FDA/CFSAN.

U.S. Participation: Yes.

Codex Committee on General Principles

The Codex Committee on General Principles (CCGP) is responsible for procedural and general matters referred to it by the Codex Alimentarius Commission, including: (a) The review or endorsement of procedural provisions/texts forwarded by other subsidiary bodies for inclusion in the *Procedural Manual* of the Codex Alimentarius Commission; and (b) The consideration and recommendation of other amendments to the *Procedural Manual*.

The Committee had the following item which was adopted by the 44th Session of the Codex Alimentarius Commission in November 2021.

- Criteria and Procedural Guidelines for Codex Committees and *ad hoc* Intergovernmental Task Forces Working by Correspondence.

The 33rd Session of the CCGP (CCGP33) is scheduled for October 2–6, 2023, in Bordeaux, France. The Committee is expected to continue discussions on:

- Revisions/amendments to Codex texts
- Format and structure of the Codex *Procedural Manual*

Responsible Agencies: A member of the Steering Committee heads the delegation to meetings of the General Principles Committee.

U.S. Participation: Yes.

Codex Committee on Methods of Analysis and Sampling

The Codex Committee on Methods of Analysis and Sampling (CCMAS) defines the criteria appropriate to Codex Methods of Analysis and Sampling; serves as a coordinating body for Codex with other international groups working on methods of analysis and sampling and quality assurance systems for laboratories; specifies, on the basis of final recommendations submitted to it by the bodies referred to above, reference methods of analysis and sampling appropriate to Codex standards which are generally applicable to a number of foods; considers, amends if necessary, and endorses as appropriate, methods of analysis and sampling proposed by Codex (commodity) committees, except for those methods of analysis and sampling for residues of pesticides or veterinary drugs in food, the assessment of microbiological quality and safety in food, and the assessment of specifications for food additives; elaborates sampling plans and procedures, as may be required; considers specific sampling and analysis problems submitted to it by the Commission or any of its committees; and defines procedures, protocols, guidelines or related texts for the assessment of food laboratory proficiency, as well as quality assurance systems for laboratories.

The Committee had the following items which were considered by the 44th Session of the Codex Alimentarius Commission in November 2021.

Adopted at Step 8 (final adoption):

- Revised *Guidelines on Measurement Uncertainty* (CXG 54–2004)

Revoked:

- Methods of analysis/performance criteria for certain provisions in *Recommended Methods of Analysis and Sampling* (CXS 234–1999) as listed in REP21/MAS Appendix II, Part 2

In addition, the Commission adopted:

- Methods of analysis and performance criteria amending certain provisions in *Recommended Methods of Analysis and Sampling* (CXS 234–1999)
- Editorial amendment to the provision in Section 3.3 of the *Standard for Edible Casein Products* (CXS 290–1995)
- Methods of analysis for provisions for fats and oils (part 4.3 of REP21/MAS), which had been considered and agreed by the 27th Session of Codex Committee on Fats and Oils (CCFO27).

The 42nd Session of the CCMAS (CCMAS42) is scheduled to convene June 12–16, 2023. The CCMAS42 agenda is currently unavailable, and we are unable to determine if CCMAS42 will recommend adoptions or approvals at CAC46.

The Committee is expected to continue working on:

- Revised *General Guidelines on Sampling* (CXG 50–2004)
- Amendments to certain provisions in *Recommended Methods of Analysis and Sampling* (CXS 234–1999)

Responsible Agencies: HHS/FDA/CFSAN; USDA/AMS.

U.S. Participation: Yes.

Codex Committee on Nutrition and Foods for Special Dietary Uses

The Codex Committee on Nutrition and Foods for Special Dietary Uses (CCNFSDU) is responsible for studying nutrition issues referred to it by the Codex Alimentarius Commission. The Committee also drafts general provisions, as appropriate, on nutritional aspects of all foods and develops standards, guidelines, or related texts for foods for special dietary uses in cooperation with other committees where necessary; considers, amends if necessary, and endorses provisions on nutritional aspects proposed for inclusion in Codex standards, guidelines, and related texts.

The Committee convened its 42nd Session virtually from November 19–25, 2021, with report adoption taking place on December 1, 2021. The relevant document is REP22/NFSDU.

The Committee has the following item that will be considered by the 45th Session of the Commission.

To be considered for final adoption at Step 8:

- Guidelines for Ready-to-Use Therapeutic Foods (RUTF)

The 43rd Session of the CCNFSDU (CCNFSDU43) is scheduled to convene March 6–10, 2023. The CCNFSDU43 agenda is currently unavailable, and we are unable to determine if CCNFSDU43 will recommend adoptions or approvals at CAC46.

The Committee is expected to continue working on:

- Review of the *Standard for Follow-up Formula:* Section A & Section B: scope, description, essential composition and labelling; and remaining sections; (CXS 156–1987)
- General Principles for the establishment of Nutrient Reference Values—Requirements (NRVs-R) for persons aged 6–36 months

Responsible Agencies: HHS/FDA/CFSAN; USDA/ARS.

U.S. Participation: Yes.

Codex Committee on Pesticide Residues

The Codex Committee on Pesticide Residues (CCPR) is responsible for establishing maximum residue limits (MRLs) for pesticide residues in specific food items or in groups of food; establishing MRLs for pesticide residues in certain animal feeding stuffs moving in international trade where this is justified for reasons of protection of human health; preparing priority lists of pesticides for evaluation by the Joint FAO/WHO Meeting on Pesticide Residues (JMPR); considering methods of sampling and analysis for the determination of pesticide residues in food and feed; considering other matters in relation to the safety of food and feed containing pesticide residues; and establishing maximum limits for environmental and industrial contaminants showing chemical or other similarity to pesticides in specific food items or groups of food.

The 52nd Session of the Committee (CCPR52) met virtually July 26–August

3, 2021. The relevant document is REP 21/PR.

The Committee had the following items which were considered by the 44th Session of the Codex Alimentarius Commission in November 2021.

Adopted at Step 8 and 5/8 (final adoption):

- 402 MRLs for different pesticide residues
- Revisions of the Classification: Class C: Primary Feed Commodities. Type 11: Primary Feed Commodities of Plant Origin, All Groups
- Revisions of the Classification: Class D: Processed Food Commodities of Plant Origin. All Types and Group
- Revisions of the Classification: Tables 7 and 8 of *Principles and Guidelines for the Selection of Representative Commodities for the extrapolation of MRLs for Pesticides to Commodity Group* (CXG 84–2012)

The Commission also discontinued work, approved new work, and revoked existing MRLs as recommended by CCPR52.

The 53rd Session of the CCPR (CCPR53) is scheduled to convene virtually from July 4–8, 2022, with report adoption taking place on July 13, 2022. We are unable to determine if CCPR53 will recommend adoptions or approvals at CAC45.

The Committee is expected to continue working on:

- Revision of the *Classification of Food and Feed* (CXA 4–1989) for selected commodity groups:
  - Revision of Class C, animal feed commodities, taking into account silage, fodder, and a separate group for grasses
  - Revision of Class D, processed food commodities
  - Transferring commodities from Class D to Class C
  - Creating tables with representative crops for Class C and D
  - Edible animal tissues (including edible offal), in collaboration with the Codex Committee on Residues of Veterinary Drugs in Foods (CCRVDF) EWG on edible animal tissues
- Harmonization of mammalian meat MRLs between CCPR and CCRVDF
- Guidelines for compounds of low public health concern that may be exempted from the establishment of Maximum Residue Limits for Pesticides (CXLs) or do not give rise to residues
- Establishment of a Codex database of national registration of pesticides
- Establishment of JMPR schedules and priority lists for evaluations of pesticides
- Guidelines for compounds of low public health concern that could be exempted from the establishment of Codex MRLs for pesticides
- Management of unsupported compounds in the CCPR schedules and priority lists of pesticides for evaluation by the JMPR
- Review of the *Guidelines on the use of mass spectrometry for the identification, confirmation, and quantitative determination of pesticide residues* (CXG 56–2005) and the *Guidelines on performance criteria for methods of analysis for the determination of pesticide residues in food and feed* (CXG 90–2017)
- Opportunities and challenges for JMPR participation in international review of a new compound

Responsible Agencies: EPA/Office of Chemical Safety and Pollution Prevention (OCSPP)/Office of Pesticide Programs (OPP); USDA/FSIS.

U.S. Participation: Yes.

Codex Committee on Residues of Veterinary Drugs in Foods

The Codex Committee on Residues of Veterinary Drugs in Foods (CCRVDF) determines priorities for the consideration of residues of veterinary drugs in foods and recommends MRLs for veterinary drugs. The Committee also develops codes of practice, as may be required, and considers methods of sampling and analysis for the determination of veterinary drug residues in food.

The Committee convened its 25th Session virtually from July 12–16, 2021, with report adoption taking place on July 20, 2021. The relevant document is REP21/RVDF.

The Committee had the following items which were considered by the 44th Session of the Codex Alimentarius Commission in November 2021.

Adopted at Step 8 and 5/8 (final adoption):

- MRL for Flumethrin (honey)
- MRL for Diflubenzuron (salmon—muscle plus skin in natural proportion)
- MRL for Halquinol (swine—muscle, skin plus fat, liver and kidney
- Amendment to the *Glossary of Terms and Definitions (Residues of Veterinary Drugs in Foods)* (CXA 5–1993): Definition of edible offal

The 26th Session of the CCRVDF (CCRVDF26) is scheduled to convene February 13–17, 2023. The CCRVDF26 agenda is currently unavailable, and we are unable to determine if CCRVDF26 will recommend adoptions or approvals at CAC46.

The Committee is expected to continue working on:

- MRLs for ivermectin (sheep, goats, pigs-fat, kidney, liver, and muscle)
- Discussion paper on extrapolation of MRLs to one or more species (including a pilot on extrapolation of MRLs identified in Part D of the Priority List—REP18/RVDF, App. VI)
- Discussion paper on the development of a harmonized definition for edible tissues of animal origin (including edible offal) (in coordination with CCPR)
- Discussion paper on advantages and disadvantages of a parallel approach to compound evaluation
- Database on countries' needs for MRLs
- Priority List of veterinary drugs requiring evaluation or re-evaluation by JECFA

Responsible Agencies: HHS/FDA/Center for Veterinary Medicine (CVM); USDA/FSIS.

U.S. Participation: Yes.

Codex Committee on Spices and Culinary Herbs

The Codex Committee on Spices and Culinary Herbs (CCSCH) is responsible for elaborating worldwide standards for spices and culinary herbs in their dried and dehydrated state in whole, ground, and cracked or crushed form. CCSCH also consults, as necessary, with other international organizations in the standards development process to avoid duplication.

The Committee had the following items which were considered by the 44th Session of the Codex Alimentarius Commission in November 2021.

Adopted at Step 8 (final adoption):

- Standard for dried oregano
- Standard for dried roots, rhizomes and bulbs-dried or dehydrated ginger with the food additive provisions as amended and endorsed by the Codex Committee on Food Additives (CCFA)
- Standard for dried floral parts—dried cloves
- Standard for dried leaves—dried basil

Approved as new work:

- Standard for small cardamom
- Standard for turmeric
- Group standard for spices in the form of dried fruits and berries (all spice, juniper berry, star anise and vanilla)

The 6th Session of the CCSCH is scheduled to convene virtually from September 26–October 10, 2022. The relevant document is CX/SCH 22/6/1. We are unable to determine if CCSCH will recommend adoptions or approvals at CAC45.

The Committee is expected to continue working on:

- Draft Standard for Saffron
- Draft Standard for Dried Seeds—Nutmeg

- Proposed Draft Standard for Dried and/or Dehydrated Chilli Peppers and Paprika
- Proposed Draft Standard for Small Cardamom
- Proposed Draft Standard for Spices in Dried Fruits and Berries (allspices, juniper berry, star anise, and vanilla)
- Proposed Draft Standard for Tumeric
- Consideration of the Proposals for New Work
- Update to the Template for SCH Standards

Responsible Agencies: USDA/AMS; HHS/FDA/CFSAN.
U.S. Participation: Yes.

Ad hoc Codex Intergovernmental Task Force on Antimicrobial Resistance

The *Ad hoc* Codex Intergovernmental Task Force on Antimicrobial Resistance (TFAMR) was responsible for reviewing and revising, as appropriate, the *Code of Practice to Minimize and Contain Antimicrobial Resistance* (CAC/RCP 61–2005) to address the entire food chain, in line with the mandate of Codex; and considering the development of Guidance on Integrated Surveillance of Antimicrobial Resistance, taking into account the guidance developed by the WHO Advisory Group on Integrated Surveillance of Antimicrobial Resistance (AGISAR) and relevant World Organization for Animal Health (OIE) documents. The objective of the Task Force was to develop science-based guidance on the management of foodborne antimicrobial resistance, taking full account of the WHO Global Action Plan on Antimicrobial Resistance, in particular Objectives 3 and 4, the work and standards of relevant international organizations, such as FAO, WHO, and OIE, and the One-Health approach, to ensure members have the necessary guidance to enable coherent management of antimicrobial resistance along the food chain. The Task Force was expected to complete this work within three (or a maximum of four) sessions.

The 8th Session of the Task Force met virtually from October 4–16, 2021. The relevant document is REP 21/AMR.

The Committee had the following items which were considered by the 44th Session of the Codex Alimentarius Commission in November 2021.

Adopted at Step 8 and 5/8 (final adoption):

- *Code of Practice to Minimize and Contain Antimicrobial Resistance* (CXC 61–2005)
- *Guidelines on integrated surveillance of antimicrobial resistance* (CXG 94–2021)

TFAMR completed its work and fulfilled the mandate given by the CAC, therefore no further meetings are required, and the Task Force was dissolved at the 44th Session of the Commission.

Responsible Agencies: HHS/FDA; USDA/Office of the Chief Scientist.
U.S. Participation: Yes.

Adjourned Codex Commodity Committees

Several Codex Alimentarius Commodity Committees have adjourned *sine die.* The following Committees fall into this category:

Cereals, Pulses and Legumes—Adjourned Sine Die 2020

Responsible Agency: HHS/FDA/CFSAN.
U.S. Participation: Yes.

Cocoa Products and Chocolate—Adjourned Sine Die 2001

Responsible Agency: HHS/FDA/CFSAN.
U.S. Participation: Yes.

Meat Hygiene—Adjourned Sine Die 2003

Responsible Agency: USDA/FSIS.
U.S. Participation: Yes.

Milk and Milk Products—Adjourned Sine Die 2017

Responsible Agency: USDA/AMS; HHS/FDA/CFSAN.
U.S. Participation: Yes.

Natural Mineral Waters—Adjourned Sine Die 2008

Responsible Agency: HHS/FDA/CFSAN.
U.S. Participation: Yes.

Processed Fruits and Vegetables—Adjourned Sine Die 2020

Responsible Agency: USDA/AMS; HHS/FDA/CFSAN.
U.S. Participation: Yes.

Sugars—Adjourned Sine Die 2019

Responsible Agency: HHS/FDA/CFSAN.
U.S. Participation: Yes.

Vegetable Proteins—Adjourned Sine Die 1989

Responsible Agency: USDA/ARS.
U.S. Participation: Yes.

FAO/WHO Regional Coordinating Committees

The FAO/WHO Regional Coordinating Committees define the problems and needs of the regions concerning food standards and food control; promote within the Committee contacts for the mutual exchange of information on proposed regulatory initiatives and problems arising from food control and stimulate the strengthening of food control infrastructures; recommend to the Commission the development of worldwide standards for products of interest to the region, including products considered by the Committees to have an international market potential in the future; develop regional standards for food products moving exclusively or almost exclusively in intra-regional trade; draw the attention of the Commission to any aspects of the Commission's work of particular significance to the region; promote coordination of all regional food standards work undertaken by international governmental and non-governmental organizations within each region; exercise a general coordinating role for the region and such other functions as may be entrusted to them by the Commission; and promote the use of Codex standards and related texts by members.

There are six regional coordinating committees:

- Coordinating Committee for Africa
- Coordinating Committee for Asia
- Coordinating Committee for Europe
- Coordinating Committee for Latin America and the Caribbean
- Coordinating Committee for the Near East
- Coordinating Committee for North America and the South West Pacific

Coordinating Committee for Africa

The Coordinating Committee for Africa (CCAFRICA) did not meet in 2021. The 24th Session of CCAFRICA is scheduled to convene virtually from September 5–9, 2022, with report adoption taking place on September 13, 2022. The agenda is not yet available, and it is not possible to determine whether any texts will be forwarded for consideration by CAC45.

Responsible Party: USDA/TFAA/USCO.
U.S. Participation: Yes (as an observer).

Coordinating Committee for Asia

The Coordinating Committee for Asia (CCASIA) did not meet in 2021. The 22nd Session of CCASIA is scheduled to convene virtually from October 12–18, 2022, with report adoption on October 21. The agenda is not yet available, and it is not possible to determine whether any texts will be forwarded for consideration by CAC45.

Responsible Party: USDA/TFAA/USCO.
U.S. Participation: Yes (as an observer).

Coordinating Committee for Europe

The Coordinating Committee for Europe (CCEURO) convened its 32nd Session virtually from May 16–18, 2022, with report adoption taking place on May 20, 2022.

The Coordinating Committee discussed the following agenda items:

- Matters arising from the Codex Alimentarius Commission and Codex subsidiary bodies
- Food safety and quality in the region including current and emerging issues—country updates
- Updates on FAO and WHO work of regional interest
- Codex work relevant to the region
- Implementation of the Codex Strategic Plan 2020–2025
- Nomination of the Regional Coordinator

Responsible Party: USDA/TFAA/USCO.

U.S. Participation: Yes (as an observer).

Coordinating Committee for Latin America and the Caribbean

The Coordinating Committee for Latin America and the Caribbean (CCLAC) did not meet in 2021. The 22nd Session of CCLAC is scheduled to convene virtually October 24–28, 2022. The agenda is not yet available, and it is not possible to determine whether any texts will be forwarded for consideration by CAC45.

Responsible Party: USDA/TFAA/USCO.

U.S. Participation: Yes (as an observer).

Coordinating Committee for North America and the South West Pacific

The Coordinating Committee for North America and the South West Pacific (CCNASWP) did not meet in 2021, nor does it plan to in 2022. The 16th Session of the CCNASWP is scheduled to convene from January 30–February 3, 2023. The meeting agenda is not currently available.

The Committee is expected to continue working on:

- Draft regional standard for fermented noni fruit juice

Responsible Party: USDA/TFAA/USCO.

U.S. Participation: Yes.

Coordinating Committee for the Near East

The Coordinating Committee for the Near East (CCNE) did not meet in 2021, nor does it plan to in 2022. The next CCNE meeting is planned for 2023.

Responsible Party: USDA/TFAA/USCO.

U.S. Participation: Yes (as an observer).

Contact Information

U.S. Codex Office, United States Department of Agriculture, Room 4861, 1400 Independence Avenue SW, Washington, DC 20250–3700, Phone: +1 (202) 205–7760, Email: *uscodex@usda.gov*.

[FR Doc. 2022–14018 Filed 6–29–22; 8:45 am]

BILLING CODE P

DEPARTMENT OF AGRICULTURE

Natural Resources Conservation Service

[Docket ID: NRCS–2022–0006]

Urban Agriculture and Innovative Production Advisory Committee Virtual Meeting

AGENCY: Natural Resources Conservation Service (NRCS), United States Department of Agriculture (USDA).

ACTION: Notice of meeting.

SUMMARY: The Natural Resources Conservation Service (NRCS) is holding its second public meeting of the Urban Agriculture and Innovative Production Advisory Committee (UAIPAC). UAIPAC was established to advise the Secretary on the development of policies and outreach relating to urban, indoor, and other emerging agricultural production practices, and other matters. UAIPAC will also develop recommendations and advise on policies, initiatives, and outreach administered by the Office of Urban Agriculture and Innovative Production (OUAIP); evaluate ongoing research and extension activities related to urban, indoor, and other innovative agricultural practices; identify new and existing barriers to successful urban, indoor, and other emerging agricultural production practices; and provide additional assistance and advice to OUAIP as appropriate.

DATES:

Virtual Meeting: UAIPAC will meet via webinar on Friday, August 5, 2022, from 1:00 p.m. to 3:00 p.m. Eastern Time (ET).

Registration: To attend the meeting, you can register by Thursday, August 4, 2022.

Comments: The deadline to submit written comments for the UAIPAC to review before the meeting is Friday, July 29, 2022.

ADDRESSES:

Comments: We invite you to submit comments for the UAIPAC meeting. You may submit comments through the:

- *Federal eRulemaking Portal:* go to *https://www.regulations.gov* docket ID NRCS–2022–0006 and follow the instructions for submitting comments.

UAIPAC Website: The meeting webinar can be accessed via either the internet or phone; detailed access information will be available on the UAIPAC website prior to the meeting: *http://www.farmers.gov/urban.*

Registration: The public can register to attend the UAIPAC meeting at: *https://www.zoomgov.com/webinar/register/WN_kYuDvpVLRlCXONt1bQedMA.*

Comments will be available for viewing online at *www.regulations.gov.* Comments received will be posted without change, including any personal information provided.

FOR FURTHER INFORMATION CONTACT: Tammy Willis; telephone: (315) 456–9024; email: *UrbanAgricultureFederalAdvisoryCommittee@usda.gov.*

SUPPLEMENTARY INFORMATION:

UAIPAC Purpose

Section 222 of the Department of Agriculture Reorganization Act of 1994, as amended by section 12302 of the 2018 Farm Bill (Pub. L. 115–334), directs the Secretary of the USDA to establish an ''Urban Agriculture and Innovative Production Advisory Committee'' to advise the Secretary on any aspect of section 222, including the development of policies and outreach relating to urban, indoor, and other emerging agricultural production practices.

In addition, UAIPAC will advise the Director of the OUAIP on policies, initiatives, and outreach administered by that office. UAIPAC will evaluate and review ongoing research and extension activities relating to urban, indoor, and other innovative agricultural practices; identify new and existing barriers to successful urban, indoor, and other emerging agricultural production practices; and provide additional assistance and provide advice to the Director as appropriate.

UAIPAC Webinar

The UAIPAC will hold the second public meeting on Friday, August 5, 2022. The virtual meeting will be open to the public and will provide an opportunity for stakeholders to listen to the UAIPAC's current activities.

The agenda will include, but is not limited to:

- Discussions of the potential UAIPAC subcommittees and their focus

priorities; the USDA's Equity Commission Designated Federal Officer will share an overview of the Equity Commission's priorities; and

• The Farm Service Agency (FSA) will give an operational overview of the 17 Urban County Committees; and OUAIP's staff will give an overview of new urban conservation practices.

Please check the UAIPAC website for the agenda 24 to 48 hours prior to Friday, August 5, 2022, via *http://www.farmers.gov/urban.*

Submitting Written Comments

Comments should focus on specific topics pertaining to urban agriculture, innovative production, and associated USDA programs and services. Written public comments will be accepted on or before 11:59 p.m. ET on Friday, July 29, 2022, via the Federal eRulemaking Portal: go to *https://www.regulation.gov* and follow the instructions for submitting comments. UAIPAC will not have adequate time to consider any comments submitted after Friday, July 29, 2022, prior to the meeting.

In addition, outside of this meeting we welcome your comments to the UAIPAC email box at *UrbanAgriculture FederalAdvisoryCommittee@usda.gov* at any time.

Meeting Accommodation Request

Instructions for registering for this meeting can be obtained by contacting Ms. Willis by or before the deadline.

If you are a person requiring reasonable accommodation, please make requests in advance for sign language interpretation, assistive listening devices, or other reasonable accommodation, to Ms. Willis as identified above. Determinations for reasonable accommodation will be made on a case-by-case basis.

Date: June 27, 2022.

Cikena Reid,

Committee Management Officer, USDA.

[FR Doc. 2022–14039 Filed 6–29–22; 8:45 am]

BILLING CODE 3410–16–P

DEPARTMENT OF AGRICULTURE

Rural Business-Cooperative Service

Rural Housing Service

Rural Utilities Service

[Docket No. RBS–22–COOP–0016]

Notice of Funds Availability for the Rural Placemaking Innovation Challenge (RPIC) for Fiscal Year 2022

AGENCY: Rural Business-Cooperative Service (RBCS), Rural Utilities Service (RUS), Rural Housing Service (RHS), USDA.

ACTION: Notice of funds availability.

SUMMARY: The Under Secretary for Rural Development (RD) is seeking applications, for the Rural Development Cooperative Agreement Program, herein referred to as the Rural Placemaking Innovation Challenge (RPIC), from eligible entities to provide technical assistance and training to rural communities for placemaking planning and implementation. This funding opportunity will be administered by the USDA Rural Development Innovation Center and is authorized by the Consolidated Appropriations Act, 2022, to provide up to $4 million in competitive cooperative agreement funds. This announcement lists the information needed to submit an application.

DATES: Applications for RPIC cooperative agreement(s) must be submitted electronically through *Grants.gov* by 11:59 p.m. Eastern Daylight Time by August 15, 2022. Applications received after 11:59 p.m. Eastern Daylight Time on August 15, 2022 will not be considered.

ADDRESSES: *Application Submission:* The application system for electronic submissions will be available at *https://www.grants.gov/.*

FOR FURTHER INFORMATION CONTACT: USDA Rural Development, Innovation Center, via email at: *RD.RPIC@usda.gov,* or via phone at: Gregory Dale (202) 568–9558 or Sherri McCarter (615) 982–2078. Persons with disabilities who require alternative means for communication should contact the U.S. Department of Agriculture (USDA) Target Center at (202) 720–2600 (voice). The last day for *accepting questions* on this notice will be August 12, 2022. Questions submitted after this deadline cannot be guaranteed a timely answer in advance of the closing date of this notice.

SUPPLEMENTARY INFORMATION:

Authority: This solicitation is authorized pursuant to 7 U.S.C. 2204b(b)(4); Consolidated Appropriations Act, 2022.

Overview

Federal Agency: Rural Business-Cooperative Service (RBCS), Rural Utilities Service (RUS), and Rural Housing Service (RHS), (USDA).

Funding Opportunity Title: Rural Placemaking Innovation Challenge (RPIC).

Announcement Type: Notice of Funds Availability (NOFA).

Assistance Listing Number: Rural Development Cooperative Agreement Program—10.890.

Due Date for Applications: Applications for RPIC cooperative agreement(s) must be received by 11:59 p.m. on August 15, 2022. Applications received after 11:59 p.m. Eastern Daylight Time on August 15, 2022 will not be considered.

Rural Development: Key Priorities

The Agency encourages applicants to consider projects that will advance the following key priorities (more details available at *https://www.rd.usda.gov/priority-points*)

• Assisting rural communities recover economically from the impacts of the COVID–19 pandemic, particularly disadvantaged communities;

• Ensuring all rural residents have equitable access to RD programs and benefits from RD funded projects; and

• Reducing climate pollution and increasing resilience to the impacts of climate change through economic support to rural communities.

For further information, visit *https://www.rd.usda.gov/priority-points.*

Items in Supplementary Information

I. Program Overview
II. Federal Award Information
III. Definitions
IV. Eligibility Information
V. Application and Submission Information
VI. Application Review Information
VII. Federal Award Administration Information
VIII. Federal Awarding Agency Contacts
IX. Other Information

I. Program Overview

A. Background

The Rural Placemaking Innovation Challenge (RPIC) provides planning support, technical assistance, and training to communities to foster placemaking activities in rural communities. Funds can help enhance capacity for broadband access, preserve cultural and historic structures, and support the development of transportation, housing, and recreational spaces. Applicants must demonstrate existing and proposed partnerships with public, private, philanthropic, Tribal and community partners to provide assistance in implementing the placemaking plan. This funding announcement supports the delivery of technical assistance and training in visioning, planning, and assisting communities to implement placemaking efforts in rural communities under the Rural Placemaking Innovation Challenge.

B. Program Description

RD is authorized to administer cooperative agreement awards in accordance with 7 U.S.C. 2204b(b)(4). The intention of RPIC is to provide cooperative agreement funding to eligible applicants working to promote public-private, philanthropic partnerships in rural and Tribal communities that encourage economic and social development. These projects are intended to support rural America and align with the mission of existing USDA RD programs to increase rural economic growth and improve the quality of life in rural America by supporting essential services such as housing, economic and community development, and required infrastructure.

For the purpose of this notice, Technical Assistance and Training for Placemaking is defined in Part III.

RPIC operates under the following concepts:

- Creating livable communities is important for community developers and practitioners who implement these strategies in rural communities and areas.
- Placemaking practices include both innovative and adaptive as well as established technical processes and solutions.
- Partnerships are a key element to the RPIC and must be developed with public, private, and philanthropic organizations creating new collaborative approaches, learning together, and bringing those learned strategies into rural and Tribal communities.
- Placemaking contributes to long-term investment and therefore supports a community's resiliency, social stability, and collective identity.
- Broadband is an essential component to supporting placemaking initiatives.

Placemaking is a collaborative engagement process that helps leaders from rural and Tribal communities create quality places where people will want to live, work, play and learn. By bringing together partners from public, private, Tribal and philanthropic communities, and technology sectors, placemaking is a wrap-around approach to community and economic development that incorporates creativity, infrastructure initiatives, and vibrant public spaces. Key elements of quality places can include a mix of uses; effective public spaces; broadband capacity; preservation of historic places; transportation options; diverse house options; and a respect of community heritage, arts, culture, creativity, recreation and green space.

II. Federal Award Information

A. Assistance Listing Number: 10.890.

Assistance Listing Title: Rural Development Cooperative Agreement Program.

B. Funds Available

The amount available for RPIC in FY 2022 is up to $4 million. Lead applicants may not submit more than one application but may identify more than one community with which they are providing placemaking assistance. The maximum award amount for any one applicant is $250,000. RD reserves the right to withhold the awarding of any funds if no application receives a minimum score of at least 60 points. There is no commitment by USDA to fund any application that does not achieve the minimum score.

This funding opportunity lists the information needed to apply for these funds and announces that RD is accepting FY 2022 applications to support RPIC. Rural Development may at its discretion, increase the total level of funding available in this funding round or in any category in this funding round from any available source provided the awards meet the requirements of the statute which made the funding available to the agency.

C. Approximate Number of Awards

The Agency anticipates that it may select one, multiple, or no award recipients from this funding opportunity. Applicants may not submit more than one application.

D. Type of Instrument

RD is authorized to administer cooperative agreement awards in accordance with 7 U.S.C. 2204b(b)(4) for the Rural Placemaking Innovation Challenge.

E. Period of Performance

The maximum Period of Performance is 2 years. Applicants should anticipate a Period of Performance beginning October 1, 2022 and ending no later than September 30, 2024.

III. Definitions

The terms and conditions provided in this Notice of Funds Availability (NOFA) are applicable to and for the purposes of this NOFA only. Unless otherwise provided in the award documents, all financial terms not defined herein shall have the meaning as defined by Generally Accepted Accounting Principles (GAAP).

Capacity is defined as previous experience with state or federal grant administration and demonstrated experience in economic development and placemaking technical assistance.

Multi-jurisdictional means more than one jurisdiction where jurisdiction refers to a unit of government or other entity with similar powers, such as a city, county, district, special purpose district, township, town, borough, parish, village, state, Tribe, etc.

Multi-sectoral means intentional collaboration between two or more sectors (*e.g.,* utility, health, housing, community services, etc.) to accomplish goals and achieve outcomes in communities and regions.

Placemaking is a collaborative engagement process that helps leaders from rural communities create quality places where people will want to live, work, play and learn. By bringing together partners from public, private, Tribal, philanthropic communities, and technology sectors, placemaking is a wrap-around approach to community and economic development that incorporates creativity, infrastructure initiatives, and vibrant public spaces.

Placemaking Plan is a written document that describes the strategic plan for the community to implement the goals and objectives identified through the placemaking planning process.

Quality of life means a measure of human well-being that can be identified though economic and social indicators. Modern utilities, affordable housing, efficient transportation, and reliable employment are economic indicators that must be integrated with social indicators such as access to medical services, public safety, education, and community resilience to empower rural communities to thrive.

Region (Four Regions) means:

- The Northeast includes Maine, New Hampshire, Vermont, Massachusetts, Rhode Island, Connecticut, New York, New Jersey, Delaware, Maryland, Virginia, West Virginia, and Pennsylvania.
- The Midwest includes Ohio, Michigan, Indiana, Wisconsin, Illinois, Minnesota, Iowa, Missouri, North Dakota, South Dakota, Nebraska, and Kansas.
- The South includes Kentucky, North Carolina, South Carolina, Tennessee, Georgia, Florida, Alabama, Mississippi, Arkansas, Louisiana, Texas, Puerto Rico, Virgin Islands and Oklahoma.
- The West includes Montana, Idaho, Wyoming, Colorado, New Mexico, Arizona, Utah, Nevada, California, Oregon, Washington, Alaska, Hawaii, and U.S. Pacific Island Territories.

RPIC Cooperative Agreement is the instrument used to fund the support of

Rural Development's goals of increasing rural economic growth. In a cooperative agreement, federal employees participate more closely in project activities, often working side-by-side with the cooperator. Cooperators are expected to have expertise in placemaking and partnerships that will enable a rural community, area, or region to implement a placemaking strategy and improve the quality of life for its citizens.

Rural area is RBCS's Rural Area definition as described in Section 343(a)(13)(A) of the Consolidated Farm and Rural Development Act which defines ''rural area'' as any area other than (1) a city or town that has a population of greater than 50,000 inhabitants and (2) any urbanized area contiguous and adjacent to such city or town described in subparagraph (1) above.

Rural Partners Network (RPN) is an alliance of federal agencies and civic partners working to expand rural prosperity through job creation, infrastructure development, and community improvement. More information about RPN is available at *https://www.rural.gov/.*

Rural Partners Network Community Networks are community networks within the Rural Partners Network (RPN) and are identified and described on the RPN website, *https://www.rural.gov/.*

Sector means stakeholders from areas such as business, health, education, and/or workforce; or from organization types such as public, Tribal communities, private, non-profit, and/or philanthropy.

Substantial involvement means when the Recipient and USDA RD participate together in the management and/or performance of the activity/project during post-award. This collaboration is programmatic in nature and may provide benefits (*e.g.,* technical expertise, knowledge, etc.) that would otherwise be unavailable to the Recipient.

Technical Assistance (TA) for Placemaking means the applicant participates in the process of providing targeted support for the delivery of placemaking planning and implementation in partnership with identified rural communities.

Training for Placemaking means the applicant provides training to the community on the components relating to the placemaking planning process, and implementation around placemaking and community and economic development processes. Training may be in the form of information, workshops, and/or mentoring.

Tribe means the term as defined in the Federally Recognized Indian Tribe List Act of 1994 (Pub. L. 103–454; 108 Stat. 4791, 4792). An American Indian or Alaska Native Tribe, band, nation, pueblo, village, or community that the Secretary of the Interior acknowledges to exist as an Indian Tribe under the Federally Recognized Tribe List Act of 1994 (25 U.S.C. 479a–1).

Tribal Entity includes all entities falling into the eligible legal structures, including but not limited to: Tribal owned corporations, intertribal non-profits and associations, Alaska Native Corporations, Native entities within the State of Alaska recognized by and eligible to receive services from the U.S. Department of the Interior's Bureau of Indian Affairs, Native Hawaiian organizations including Homestead Associations, State recognized tribes/non-profits, and individually-owned Native American entities.

Commonly used Acronyms:

DCI Distressed Communities Index
FY Fiscal Year
HBCU Historically Black Colleges and Universities
LOC Letter of Conditions
NEPA National Environmental Policy Act
NICRA Negotiated Indirect Cost Rate Agreement
RD Rural Development
RDCA Rural Development Cooperative Agreement
RPIC Rural Placemaking Innovation Challenge
SAM System for Award Management
SBA Small Business Administration
UEI Unique Entity Identifier
USDA United States Department of Agriculture
CFR Code of Federal Regulation
SPOC Single Point of Contact

IV. Eligibility Information

A. Applicants

Applicants must meet the following eligibility requirements by the application deadline. Applications that fail to meet any of these requirements by the application deadline will be deemed ineligible and will not be evaluated further and will not receive a federal award. Applicants may not submit more than one application.

Applicant Eligibility: Federally recognized Tribes and Tribal Entities (See Part III); institutions of higher education (including 1862 Land-Grant Institutions, 1890 Land-Grant Institutions, 1994 Land-Grant Institutions, Hispanic-Serving Institutions, and Historically Black Colleges and Universities (HBCU)); nonprofit organizations with 501(c)(3) IRS status; public bodies; or small private entities meeting the size standards established by the U.S. Small Business Administration (SBA).

Entities are not eligible if they have been debarred or suspended or otherwise excluded from, or ineligible for, participation in federal assistance programs under 2 CFR parts 180 and 417. In addition, an applicant will be considered ineligible for a cooperative agreement due to an outstanding judgment obtained by the U.S. in a federal court (other than U.S. Tax Court) or if the applicant is delinquent on the payment of federal income taxes or federal debt.

B. Eligible Project

The proposed project must include a component that allows for active participation by the Cooperator and substantial involvement by RD in the specified tasks outlined in the applicant's project proposal. Examples of measurable substantial involvement include, but are not limited to, the following: joint convenings of community members, partners, and stakeholders; joint delivery of training for RD programs; and the development of training sessions and outreach materials. It is the intent of this project to engage RD staff in the placemaking process, and it is the responsibility of the applicant to identify specific tasks where RD staff can provide measurable, substantial involvement in the project. If tasks are not identified, the application will not be eligible for funding.

The project must also directly benefit a rural area. All ultimate beneficiaries and/or subrecipients must be located in rural areas, and any activities or tasks must occur in rural areas.

Duplication of services is not allowed. Applicants must demonstrate that they are providing services either to new customers or new services to current customers. If the applicant's workplan and budget are duplicative of a previous and/or existing RPIC award, the application will not be considered for funding. RD will make this determination.

C. Cost Sharing and Matching Funds Verification

(1) A minimum 15 percent match of the federal grant amount requested for the cooperative agreement award is required for all applications. Matching commitments may be made in cash by the applying organization, or a combination of cash and confirmed funding commitments with third-party in-kind contributions as defined in 2

CFR 200.306. This minimum match of at least 15 percent of the federal amount requested must be committed for a period of not less than the cooperative agreement performance period. Cost sharing/matching must be committed at the time of application submission.

(2) Applicants may recruit one or more private, philanthropic, and/or eligible public partner(s) to provide the matching 15 percent (in cash and/or in-kind contributions) of the applicant's proposed federal funding request (*i.e.,* the federal grant amount requested), or the applicant can provide the full match as its own cash contribution. It is permissible to provide a combination of third-party in-kind contribution (as defined in 2 CFR 200.306) from a partner and cash contribution from the applicant, but it is not permissible for the applicant to provide its own in-kind contribution as part of the match combination. If the applicant is going to provide its own match contribution, that match must be documented as a cash contribution.

(3) RPIC Project Verification of Matching Funds: The RPIC Matching Funds Letter must be signed by the donating organization's authorized representative on the organization's letterhead and must identify the amount of matching funds or in-kind services/goods, the time period during which matching contribution will be available, and the source of the funds, as applicable (*e.g.,* cash on hand, bank statement(s) etc.).

- If providing an in-kind match, the third-party contributor must provide details on how those in-kind sources will be identified and tracked by the contributor.
- The contributor must also attach/stipulate the value of each of the goods or services (including the indirect/direct costs) being offered.
- If using calculated hours for estimating any in-kind service, the contributor must also provide how the value was arrived at for calculating the total cost for the in-kind match and associated personnel, as applicable.

Additional details about cost sharing or matching funds/contributions are located at 2

CFR 200.306. Applicant matching funds must be included in the budget justification. For matching funds offered by project partners, a separate Matching Funds Letter is required for each cash and/or third-party in-kind match contribution. Matching Funds Letters must be signed by the authorized organizational representative of the contributing organization and the applicant organization, which must include:

- the name, address, and telephone number of the contributor,
- the name of the applicant organization,
- the title of the project for which the contribution is made,
- the dollar amount of the contribution, and
- a statement that the contributor commits to furnish the contribution during the cooperative agreement period.

Applications without signed written commitments are considered incomplete and will be ineligible. The value of applicant contributions to the project is established according to Federal cost principles. Applicants should refer to 2 CFR 200.306 for additional guidance on matching funds, in-kind contributions, and allowable costs.

(4) Optional Seed Grant Matching Funds Contribution and Verification: The applicant MUST provide documentation of a third-party matching funds contribution if participating in the Optional Seed Grant scoring criteria. These matching funds are separate from the verified matched funds required for the RPIC application. The Matching Funds Letter for the optional seed grants MUST specifically state that the funds are being allocated to the Innovation Seed Grant. The letter may be conditioned to the applicant receiving the award. (Failing to provide verification of match for the optional seed grant disqualifies the applicant from this optional scoring criteria).

D. Funding Restrictions

The following funding restrictions also apply to this program:

(1) Pre-award costs are not authorized.

(2) Use of Funds. Award funds should be calculated based on the federal amount requested by the applicant. A minimum of 15 percent match is required (refer to Part IV, Section C, Cost Sharing and Matching Funds Verification).

(3) The applicant may not use its administrative overhead or indirect costs as any part of its matching funds contribution. Using an indirect cost rate or administrative overhead for a matching fund contribution will be deemed as an ineligible use of funds for the cooperative agreement.

(4) Program Income. If you expect to earn Program Income during the Period of Performance, you must identify the amount and how you expect to use it (*e.g.,* matching funds) in your application. If your application is funded, unexpected Program Income or Program Income earned in excess of the amount you identify in your application will be deducted from the Federal share of the project in accordance with 2 CFR 200.307(e)(1).

E. Ineligible Application Information

(1) In addition to costs identified as unallowable by 2 CFR part 200 or 400, the following costs are prohibited for this program. Neither award funds nor matching funds can be used to pay for the following types of expenses (this is not a comprehensive list of unallowable costs, see 2 CFR part 200):

(a) Construction (in any form).

(b) Intermediary preparation of strategic plans for recipients.

(c) Grants to individuals.

(d) Funding a grant where there may be a conflict of interest, or an appearance of a conflict of interest, involving any action by the Agency.

(e) Purchasing real estate.

(f) Using cooperative agreement assistance or matching funds for individual development accounts.

(g) Purchasing vehicles.

(h) To pay an outstanding judgment obtained by the United States in a federal court (other than in the United States Tax court), which has been recorded. An applicant will be ineligible to receive an award until the judgment is paid in full or otherwise satisfied.

(2) Applications will first be reviewed to determine if applicants meet the eligibility requirements and compliance with the funding restrictions in this notice. If we determine that your application is ineligible, we will discontinue processing it, which means that we will not evaluate it further nor provide any scoring information.

V. Application and Submission Information

A. Electronic Application and Submission

Applications must be submitted electronically using *Grants.gov*. No other form of application will be accepted. Application and supporting materials are available at *Grants.gov*. Your application must contain all required information.

To apply electronically, you must follow the instructions for this funding announcement at *Grants.gov*. Please note that we will not accept applications through mail or courier delivery, in-person delivery, email, or fax.

You can locate the *Grants.gov* downloadable application package for this program by using a keyword, the program name, or the Assistance Listing Number for this program.

When you enter the *https://www.grants.gov/* website, you will find

information about applying electronically through the site as well as the hours of operation.

To use *Grants.gov*, you must already have a Unique Entity Identifier. At the time of application, each applicant must have an active registration in the System for Award Management (SAM) before submitting its application in accordance with 2 CFR part 25. To register in SAM, entities will be required to create a Unique Entity Identifier (UEI). Instructions for obtaining the UEI are available at *https://sam.gov/content/entity-registration.* We strongly recommend that you do not wait until the application deadline date to begin the application process through *Grants.gov*.

RD is not responsible for any technical malfunction or website problems related to *Grants.gov*. If issues are encountered with *Grants.gov*, please contact the *Grants.gov* help desk at (800) 518–4726 or *support@grants.gov.* The applicant assumes the risk of any delays in application submission through *Grants.gov*.

Submitting an application through *Grants.gov* requires completing a variety of tasks and steps. There are also several preliminary registration steps before the applicant can submit the application. It is recommended that the instructions for registering be reviewed as soon as possible but at least two weeks before the planned application submission date.

You must submit all application documents electronically through *Grants.gov*. Applications must include electronic signatures. Original signatures may be required if funds are awarded.

After applying electronically through *Grants.gov* you will receive an automatic acknowledgement from *Grants.gov* that contains a *Grants.gov* tracking number.

B. Content and Form of Application Submission

For an application to be considered complete, the applicant must complete and submit the forms and supporting documentation contained in this section in addition to the written narrative proposal information in Part VI.

Each page must be on numbered, letter-sized (8 ½″ × 11″) paper utilizing a white background that has 1″ margins, and the text of the application must be typed, single spaced, black, and in a font no smaller than 12 point.

(1) *Applicants must complete and submit the following forms to apply for an RPIC cooperative agreement:*

(a) Standard Form 424, ''Application for Federal Assistance—Non-construction.''

(b) Standard Form 424A, ''Budget Information—Non-Construction Programs.''

(c) Standard Form 424B, ''Assurances—Non-Construction Programs.''

(d) Execute Form RD 400–1 ''Equal Opportunity Agreement.''

(2) *All applications shall be accompanied by the following supporting documentation in concise written narrative form:*

(a) Civil Rights Compliance Requirements: All awards made under this notice are subject to Title VI of the Civil Rights Act of 1964 as required by 7 CFR part 15, subpart A, section 504 of the Rehabilitation Act of 1973, the Americans with Disabilities Act (ADA) of 1990, and the Age Discrimination Act of 1975.

(b) Evidence of applicant's legal existence and authority in the form of organizational documents such as: Articles of Incorporation, By-Laws, or Charter.

(c) Evidence of tax-exempt status from the Internal Revenue Service (IRS), if applicable.

(d) List of current principals and consultants, including first and last names.

(e) Applicants applying as a small private entity must provide a written self-certification which includes the entity's NAICS code or industry, number of employees or average annual revenue, and how the applicant meets the U.S. SBA small business size standards for their industry (*https://www.sba.gov/size-standards*).

(f) Negotiated Indirect Cost Rate Agreement, if applicable.

(g) Written Proposal—The written proposal should be assembled into one or more pdf file(s) and should conform to the order in which the Evaluation Criteria are presented in Part VI Section B. The completed pdf file(s) should be uploaded into *Grants.gov* as an attachment to the application. The maximum limit for the written narrative section is 25 pages. Information exceeding 25 pages for the written narrative may not be considered for evaluation by the scoring panel.

C. System for Award Management (SAM) and Unique Entity Identifier

To be eligible (unless you are excepted under 2 CFR 25.110(b), (c) or (d)), you are required to do the following:

(1) At the time of application, each applicant must have an active registration in the System for Award Management (SAM) before submitting its application in accordance with 2 CFR part 25. To register in SAM, entities will be required to create a Unique Entity Identifier (UEI). Instructions for obtaining the UEI are available at *https://sam.gov/content/entity-registration.*

(2) *Register in SAM before submitting your application.* You may register in SAM at no cost at *https://www.sam.gov/portal/public/SAM/.* You must provide your SAM CAGE Code and expiration date. Entities registering for the first time will also be assigned a UEI as part of the registration process. When registering in SAM, you must indicate you are applying for a federal financial assistance project or program or are currently the recipient of funding under any federal financial assistance project or program; and

(3) *Maintain active and current SAM registration.* The SAM registration must remain active with current information at all times while the Agency is considering an application or while a federal grant/cooperative agreement award or loan is active. To maintain the registration in the SAM database, the applicant must review and update the information in the SAM database annually from the date of initial registration or from the date of the last update. The applicant must ensure that the information in the database is current, accurate, and complete. Applicants must ensure they complete the Financial Assistance General Certifications and Representations in SAM.

The Agency will not make an award until the applicant has complied with all SAM requirements including providing the UEI. If an applicant has not fully complied with the requirements by the time the Agency is ready to make an award, the Agency may determine that the applicant is not qualified to receive a Federal award and use that determination as a basis for making a Federal award to another applicant.

D. Submission Dates and Times

In order to be considered for funds under this notice, applications must be deemed complete and must be received by *Grants.gov* by the deadline specified in the **DATES** section of this notice.

E. Intergovernmental Review

Executive Order (E.O.) 12372, Intergovernmental Review of Federal Programs, applies to this program. This E.O. requires that federal agencies provide opportunities for consultation on proposed assistance with state and local governments. Many states have

established a Single Point of Contact (SPOC) to facilitate this consultation. For a list of states that maintain a SPOC, please see the White House website: *https://www.whitehouse.gov/wp-content/uploads/2020/04/SPOC-4-13-20.pdf*

Submit one copy of the application to the SPOC, if one has been designated, at the same time as application submission to the Agency. If the project is located in more than one state, submit a copy to each applicable SPOC. Any comments obtained through the SPOC must be provided to the individuals identified in the ''FOR FURTHER INFORMATION CONTACT'' section of this Notice for consideration as part of your application. If your state has not established a SPOC you may submit your application directly to the Agency. Tribes are exempt from this requirement.

F. Compliance with Other Federal Statutes and Other Submission Requirements

(1) *Other Federal Statutes.* The applicant must certify to compliance with other Federal Statutes and regulations by completing the Financial Assistance General Certification and Representations in SAM, including, but not limited to the following:

(a) 7 CFR part 15, subpart A—Nondiscrimination in Federally Assisted Programs of the Department of Agriculture—Effectuation of Title VI of the Civil Rights Act of 1964. Civil Rights compliance includes, but is not limited to the following:

(i) Collect and maintain data provided by ultimate recipients on race, sex, and national origin and ensure that ultimate recipients collect and maintain this data.

(ii) Race and ethnicity data will be collected in accordance with Office of Management and Budget (OMB) **Federal Register** Notice, ''Revisions of the Standards for the Classification of Federal Data on Race and Ethnicity'' (published October 30, 1997, at 62 FR 58782); Sex data will be collected in accordance with Title IX of the Education Amendments of 1972. These items should not be submitted with the application but should be available upon request by RD.

(b) The applicant and the ultimate recipient must comply with Title VI of the Civil Rights Act of 1964, Title IX of the Education Amendments of 1972, the Americans with Disabilities Act (ADA), Section 504 of the Rehabilitation Act of 1973, the Age Discrimination Act of 1975, Executive Order 12250, and 7 CFR part 1901, subpart E.

(c) 2 CFR parts 200 and 400 (Uniform Administrative Requirements, Cost Principles and Audit Requirements for Federal Awards), or any successor regulation.

(d) Executive Order 13166, ''Improving Access to Services for Persons with Limited English Proficiency.'' For information on limited English proficiency and agency-specific guidance, go to *https://www.lep.gov/.*

(e) Federal Obligation Certification on Delinquent Debt.

(2) *Risk Review:* RD may request additional documentation from selected applicants in order to evaluate the financial, management, and performance risk posed by awardees as required by 2 CFR 200.206. Based on this risk review, RD may apply special conditions that correspond to the degree of risk assessed.

(3) National Environmental Policy Act: This notice has been reviewed in accordance with 7 CFR part 1970, ''Environmental Policies and Procedures.'' We have determined that an Environmental Impact Statement is not required because the issuance of regulations and instructions, as well as amendments to them, describing administrative and financial procedures for processing, approving, and implementing the Agency's financial programs, is categorically excluded in the National Environmental Policy Act (NEPA) regulation found at 7 CFR 1970.53(f). It has been determined that this Funding opportunity does not constitute a major Federal action significantly affecting the quality of the human environment.

G. Indirect Costs

Organizations that have an active Negotiated Indirect Cost Rate Agreement (NICRA) with the Federal Government must use the rate identified in the NICRA to determine the indirect costs to be charged to this funding. Current NICRAs must be uploaded under Other Attachments (listed as an Optional Form) in the *Grants.gov* Opportunity Application Package. Entities without a NICRA may use a de minimis rate of up to 10 percent indirect costs rate. (Refer to 2 CFR 200.414 for additional information regarding indirect costs).

VI. Application Review Information

A. General

The projects should address how existing assets can be leveraged in support of a placemaking vision and how the projects will be evaluated (*e.g.,* how projects are evaluated for funding strategies and sources, construction of new assets to be identified in the planning process). Awardees will be Cooperators and are required to participate substantially in the project alongside RD staff to bring expertise in placemaking technical assistance, to bring partnerships that will enable a rural community, area, or region to ultimately implement a placemaking strategy, and to improve the quality of life for its citizens.

Applicants are expected to provide proposals under this notice that include cooperation through substantial and measurable involvement by both the Cooperator and USDA RD staff. Proposals will support multi-sectoral or multi-jurisdictional projects in rural communities and demonstrate how placemaking technical assistance will be provided to develop implementation plans that can be aligned with the mission of USDA RD to improve quality of life and economic growth. The proposal must provide a detailed description of (i) the area to be served and (ii) how such area fits the definition of a region, multi-sectoral, or multi-jurisdictional rural area. Applicants must identify which Region or Regions are included in their proposal. If applicants propose to serve more than one Region, they must identify a primary Region.

Applicants for RPIC should be prepared to develop, be in the process of developing, or have developed a placemaking plan in partnership with public, private, Tribes, or philanthropic partners with the focus on local or regional revitalization towards economic vitality and quality of life impacts. The plans should identify potential projects that can be funded through RD programs and other federal, state, local or private sector resources. Placemaking plans developed through this funding opportunity should focus on one or more of the quality-of-life indicators as defined in Part III.

Applicants are expected to submit placemaking proposals under this notice that include multi-sectoral or multi-jurisdictional planning partnerships within at least one Region (as defined in Part III) that will provide measurable results in helping rural communities create greater social and cultural vitality in rural communities. RPIC projects should also support rural communities' ability to qualify for priority funding under Section 379H of the Consolidated Farm and Rural Development Act, ''Strategic Economic and Community Development,'' (7 U.S.C. 2008v).

For the purpose of RPIC, rural placemaking is: (1) rooted in emphasizing partnerships and collaboration among multiple public, private, Tribal, philanthropic and

community partners; (2) focused on combining federal, Tribal, state, and local resources to make wide-ranging quality-of-life impacts as opposed to separate, piecemeal, incremental improvements; and (3) based on placemaking processes to create quality places where people want to live, work, play and learn. The goal is to create greater social and cultural vitality in rural communities. Key elements of quality places may include a mix of uses; effective public spaces; broadband capability; transportation options; multiple housing options; disposition and rehabilitation of vacant structures; preservation of historic properties; and respect of community heritage, arts, culture, creativity, recreation, and green space.

Additionally, the applications will be reviewed for completeness. For an application to be considered complete, the applicant must complete and submit the written narrative proposal information and the required forms contained in Parts V and VI of this NOFA. If we determine that your application is not complete, we will discontinue processing it, which means that we will not evaluate it further nor provide any scoring information.

B. Scoring Process

If your application is determined to be eligible and complete, we will further evaluate it based on the scoring criteria listed in Part VI, Section B. All applications will be competitively scored and ranked. The minimum score requirement for a cooperative agreement award under this funding opportunity is 60 points.

(1) Number of Awards: The Agency anticipates that it may select one, multiple, or no award recipients from this funding opportunity. The Agency reserves the right to withhold the awarding of any funds if no application receives a minimum score of at least 60 points.

(2) Evaluation Criteria: (refer to Summary Table of Evaluation Criteria) Proposed projects will be evaluated based only on information provided in the application. Points will be given only for factors that are well documented in the application package and, in the opinion of RD, meet the objectives outlined in each of the evaluation criteria. References to websites or publications will not be reviewed. Full documentation and support of application criteria is encouraged.

(3) The entire written narrative proposal includes the following sections in this order:

(a) *Executive Summary*—Provide the applicant entity name, duration of project (in months), amount of federal funding requested, amount of non-federal cost-share/match funding committed, and project title. Identify geographic locations (including the primary region in which the applicant determines where the most significant work takes place) and describe, in non-technical language, the placemaking approach to be used including the objectives and strategies to be utilized; the public, private, Tribal and philanthropic partnerships developed or to be developed; the approach to be employed (including the role of participating partners); how impact will be quantified; and the predicted benefits or deliverables of the project(s).

(b) *Work Plan*—Soundness of Approach (0–35 points). The applicant can receive up to 35 points for soundness of placemaking approach in their work plan. The maximum 35 points for this criterion will be based on the following:

(i) Work Plan Approach—project objectives/background/tasks with timeline and timeframes

- Project Objective(s): Description of objective(s)—clearly defined.
- Project Background: Description of the types and general locations of rural communities to be served through this project—Geographic Location or Project Areas (include Region description).
- Describe project area(s) as multi-sectoral or multi-jurisdictional. Applicants must include their ability to support rural planning activities on a multi-sectoral or multi-jurisdictional basis and how they will effectively serve these communities based on key personnel, established timeframes, and budget.
- Project Key Tasks with Timeline and Timeframes:

—Applicants are required to include Work Plan Chart(s) that lists major task(s) by key personnel involved, time period of the task(s), substantial involvement of RD staff, expected deliverables, and budget associated with tasks.

—Applicants may provide timelines to demonstrate how the technical assistance will be delivered to rural communities and describe any supporting innovative and/or traditional placemaking approaches associated to tasks.

(ii) Implementation of Workplan—Planning through the Implementation Phase

- Project Implementation:

Applicant should include details on how the technical assistance will be provided for the placemaking planning process and how it will coach/mentor the community to bring the plan to full implementation.

(iii) Alignment of Budget/Budget Justification to Workplan

- Detailed Budget Justification should align with the tasks detailed in the workplan. Discuss how the budget specifically supports the proposed activities discussed in the Project Key Tasks (as described above). Justify project costs including personnel and any limited consultant salaries with description of duties. The budget justification should include both the federal funds requested and the applicant's matching funds. The format of the budget's narrative can be in a chart, spreadsheet, table, etc., but it should be readable on letter-size, printable pages. The information needs to be presented in such a way that the reviewers can readily understand what expenses are incurred to support the project. Statement(s) of work for any subcontractors and consultants must be included as part of the application. *(Note: consultants and subcontracts must only be used on a limited basis where not more than 49% of the federal grant amount requested can be contracted out to provide the proposed assistance. The majority of the primary work under the cooperative agreement MUST be performed by the applicant).*

(c) *Organizational Capacity & Qualifications* (0–20 points). The applicant can receive up to 20 points based on organizational capacity and qualifications. The maximum 20 points for this criterion will be based on the following:

(i) The applicant should specify years of experience in placemaking activities, types of communities previously served, and experience in performance evaluation.

(ii) The applicant's proposal should demonstrate that the applicant has identified appropriate key personnel, both in terms of number of personnel and qualifications of personnel and should provide specific detail of qualifications of key personnel relating to placemaking. Capacity of personnel to access data for needs assessments and access to planners and other technical experts will be evaluated.

(iii) All eligible applicants must demonstrate the capacity to deliver and support rural placemaking planning activities within at least one of the four regions found in Part III. Capacity is defined as previous experience with federal grant administration and demonstrated experience in economic development and placemaking technical assistance.

(d) *Partnerships (0–25 points).* The applicant can receive up to 25 points for quantity and quality of the applicant's existing public, private, Tribal, and philanthropic partnerships and proposed new partnerships for this effort. The applicant should demonstrate their ability to leverage new partners that have had limited engagement with RD projects or priorities to leverage resources, enhance technical assistance, and/or increase reach to target areas. The maximum 25 points for this criterion will be based on the following:

(i) The applicant should provide a list of existing and/or potential partners who will commit to the project as well as a description of the sectors they represent (*i.e.,* public, private, Tribal, philanthropic), and

(ii) The applicant should describe in detail how they will engage with these partners to support the project, including how they will leverage partner resources.

(e) *Targeted Impact: Planning for Broadband Infrastructure, Deployment, and/or Access. (0–10 points).* The applicant can receive up to 10 points for focusing on the following Targeted Impact. The applicant should propose how the project will plan for broadband infrastructure and/or e-connectivity opportunities within targeted areas. Please note that construction is not an allowable cost within the RPIC program.

(A) Describe how the applicant's proposal will help one or more of the targeted communities plan for broadband infrastructure around the USDA–RD ReConnect Program or other RD Broadband programs (provided that community is eligible for that program); or

(B) If one or more of the targeted communities have a USDA–RD ReConnect funded project, or other RD Broadband projects, describe how the applicant's proposal will provide follow-up and support for future broadband development or deployment; or

(C) If none of the targeted communities are participating in any RD Broadband programs, describe how the applicant will work with stakeholders to address broadband development and deployment, or broadband access or e-connectivity.

(f) *Performance Measures (0–10 points).* The applicant can receive up to 10 points based on the proposed performance measures to evaluate the progress and impact of the proposed project.

The criterion will be based on the applicant's proposal and should include a description for how the results of the technical assistance will be measured, including the quality-of-life indicators (set forth in Part III) and the benchmarks to be used for measuring effectiveness. Indicators to be used should be specific and be quantifiable.

(g) *Optional Innovation Seed Grant (0–5 or 0–10 points)* To foster public, private, Tribal and philanthropic engagement, not only through RPIC but for the community itself, the Innovation Seed Grant must be matched by no less than 50% match with additional external funding to support the community's project. The external funds can be from public, private, Tribal, philanthropic, or other federal, state, and local partners. There are two ways to be scored based on how an applicant plans to implement the Innovation Seed Grant: the applicant could receive either up to 5 points, or up to 10 points. Note that Cooperators that implement seed grants as a part of their proposal will be subject to the relevant subaward/subrecipient components from 2 CFR part 200.

(i) Scoring the Innovation Seed Grant:

- The applicant must specify Option 1 or 2.
- The applicant should provide a brief narrative of how the Innovation Seed Grant will be developed, administered, and implemented.
- It is expected that the Cooperators, in collaboration with the communities they are serving, will develop criteria for evaluating the Innovation Seed Grant for approval by a Seed Grant Committee. For evaluation of these criteria, applicants may provide sample criteria on how Seed Grants could be evaluated for:

—Innovation,
—Whether the project has been highlighted in the Placemaking Plan, and
—The probability of success and sustainability with identified outcomes to be achieved.

- The applicant MUST provide documentation of third-party matching funds contributions. These matching funds are separate from the verified matched funds required for the RPIC application. The Matching Funds Letter for the seed grants MUST specifically state that the funds are being allocated to the Innovation Seed Grant. The letter may state that the match is contingent on the applicant receiving the award. (Failing to provide verification of match disqualifies the applicant from this optional scoring criteria).

(ii) Option 1—0 to 5 points Innovation Seed Grant:

- Applicants may receive up to 5 points in scoring if their proposal and budget provide for a system of funding an Innovation Seed Grant. The seed grants are to be utilized to fund a new and innovative project that is highlighted in the placemaking plan. These seed grants are considered small financial awards for the purpose of getting a specific project implemented in the plan. The applicant can set aside, from the applicant's award, funds for an Innovation Seed Grant. The maximum RPIC funds that can be set-aside for this purpose is 10 percent.
- Individual Innovation Seed Grants may be no more than $5,000 from RPIC funds, to an ultimate recipient in a community or for an entity applying for the grant. The seed grant must have matching funds (CASH MATCH ONLY) of at least 50 percent from public, private, Tribal or philanthropic support; however, the applicant may have contributions from partnerships in excess of the minimum 50 percent match requirement.

OR

(iii) Option 2—0 to 10 points Innovation Seed Grant:

- Applicants may receive up to 10 points in scoring if their proposal and budget provide for a system of funding an Innovation Seed Grant that funds a new and innovative project that is highlighted in the placemaking plan and focuses on the Targeted Impact listed in Part VI, Section B (e) (Targeted Impact). The system should describe how the seed grant promotes and connects to the Targeted Impact. These seed grants are considered small financial awards for the purpose of getting a specific project implemented. The applicant can set aside, from the applicant's award, funds for an Innovation Seed Grant. The maximum RPIC funds that can be set-aside for this purpose is 10 percent.
- Individual Seed Grants may be no more than $5,000 from RPIC funds, to an ultimate recipient in a community or for an entity applying for the grant. The Seed Grant must have matching funds of at least 50 percent from public, private, Tribal or philanthropic support; however, the applicant may have contributions from partnerships in excess of the minimum 50 percent match requirement.

(h) *Agency Discretionary Points* (0–10 points):

The Agency may choose to award up to 10 points to an application that seeks to advance one or more of the USDA Rural Development Key Priorities (RD Key Priorities) as the set forth at: *https://www.rd.usda.gov/priority-points,* and described in the **SUPPLEMETARY INFORMATION,** *Overview* section of this

notice. These points will be assigned as follows:

i. The applicant may receive 3 points, if it is determined that the applicant plans to advance one of the RD Key Priorities.

ii. The applicant may receive 6 points if it is determined that the applicant plans to advance two of the RD Key Priorities.

iii. The applicant may receive 10 points if it is determined that the applicant plans to advance three of the RD Key Priorities.

The applicant does not need to provide additional information under this category. Information in the applicant's proposal will be used to score this category, if applicable.

The Agency may, in individual cases, make an exception to any requirement or provision of this notice, which is determined to be in the Government's interest.

(i) *Verification of Matching Funds.* The applicant must include Matching Commitment Letters signed by the donating organization's authorized representative on the organization's letterhead that identifies the amount of matching funds or in-kind services, the time period during which matching funds will be available, and the source of the funds (*e.g.,* cash on hand). See Part IV, Section C (*Cost Sharing and Matching Funds Verification*) for more information. If participating in the Optional Innovation Seed Grant, the applicant must submit separate Matching Funds Commitment Letters that specifically annotate that the funds are allocated to the Innovation Seed Grant. The funds are a cash commitment to the seed grant.

(j) *Letters of Support* (*e.g.,* additional resource commitment from partners);

(k) *Appendix*—Graphics, References, Citations, Negotiated Indirect Cost Rate Agreement (NICRA) if applicable, organizational documents, self-certifications, etc. (Note: material added in this section may not be evaluated as part of the competitive scoring process).

SUMMARY TABLE OF EVALUATION CRITERIA

Criteria	Points
1. Work Plan/Soundness of Approach	0–35 points
a. Work Plan Approach-project objectives/background/tasks with timelines and timeframes	
b. Implementation of workplan	
c. Alignment of budget/budget justification to workplan	
2. Organizational Capacity/Qualifications	0–20 points
a. Years of experience and processes employed in placemaking activities	
b. Key personnel/number and qualifications relating to placemaking-access to data for needs assessments	
c. Capacity to deliver placemaking planning, grant administration experience	
3. Partnerships	0–25 points
a. Extent of existing partnerships (# of partners/public, private, Tribal, philanthropic partners)	
b. Value that partnerships will bring to placemaking project, including existing partners and leveraging new partners for the proposed project.	
4. Targeted Impact	0–10 points
Planning for Broadband Infrastructure/Deployment/Access	
5. Performance Measures	0–10 points
Measures used for evaluating quality of life indicators and benchmarks used for measuring effectiveness	
Optional Innovation Seed Grant	0–10 points
Option—1 Innovation Seed Grant—offering seed grants for new and innovative projects highlighted in the Placemaking Plan; or.	
Option—2 Innovation Seed Grant—offering seed grants for new and innovative projects highlighted in the Placemaking Plan that specifically address the Targeted Impact priority.	
Agency Discretionary Points (Note: Applicant does not need to provide additional information for this category)	0–10 points

C. Review and Selection Process

(1) *Incomplete or ineligible applications.* Applications that are incomplete or ineligible will not be considered for funding (Reference Part V and Part VI).

(2) *The Reviewers.* All eligible applications will be evaluated by an Application Review Panel using the criteria described in Part VI of this notice. Panel members will be appointed by RD and will be qualified to evaluate the applications based on the type of work proposed by the applicant.

(3) *Selection of Qualifying Applications.* Applications will be selected in the following order:

(a) First, the highest scoring application in each of the four Regions will be selected.

(b) Second, the highest scoring Tribe or Tribal Entity Application, which has not already been selected as one of the highest scoring applications in one of the regions, will be selected.

(c) Third, up to four of the highest scoring Applications serving one or more communities within the Rural Partners Network (RPN) Community Networks can be selected. (RPN Community Networks are listed on the RPN website: Rural Partners Network | Rural.gov).

(d) Fourth, the remaining applications, regardless of Region, Tribal status, or RPN community, will be selected starting with the highest scoring application, until all available funds are exhausted.

(e) Applications, at or near the funding line, may be funded in part, if RD believes an appropriate benefit can result from partial funding and if the applicant agrees to the amount of partial funding. In the event RD considers partial funding to be appropriate, the applicant will be contacted to negotiate the final work plan and budget prior to award approval.

(4) *Appeal Request.* The applicant will be notified in writing regarding the reason(s) for any adverse decisions and will be provided a description of the options for review.

(5) *Cooperative Agreement.* Applicants selected for funding will complete a Cooperative/Grant agreement suitable to the Agency, which outlines the terms and conditions of the Cooperative Agreement award. Pursuant to the agreement, funds will be released over the course of the Cooperative Agreement period in the form of a reimbursement for the performance of eligible, approved activities. The agreement may also include reporting requirements which, if not met, may result in a delay in reimbursement,

disallowance of expenses, or a suspension of the Agreement.

(6) *Reimbursement.*

(a) SF–270, ''Request for Advance or Reimbursement,'' will be completed by the cooperator and submitted to RD along with supporting documentation.

(b) Upon receipt of a properly completed SF–270, payment will ordinarily be made within 30 days.

(c) Any change in the scope of the project, budget adjustments of more than 10 percent of the total budget, or any other significant change in the project must be reported to and approved by the approving official. Any change not approved may be cause for termination of the Cooperative Agreement.

VII. Federal Award Administration Information

A. Federal Award Notices

(1) Successful applicants will be notified in writing by the Agency with a Letter of Conditions (LOC). The LOC is a notice of selection and does not indicate that an award has been approved, nor is it an authorization to begin performance on the award. While there may be special conditions that apply on a case-by-case basis, the conditions as stated in Part VII, Section B (Administrative and National Policy Requirements) are standard for all successful applicants.

(2) Once the conditions described in the LOC have been met, the award will be approved through the execution of Form RD 4280–2 in conjunction with the Rural Development Cooperative Agreement (RDCA) Program Attachment. If an applicant is unable to meet the conditions of the award within 90 calendar days, the award will be withdrawn.

B. Administrative and National Policy Requirements

(1) The following requirements apply to grantees selected for this program:

(a) Complete Form RD 1942–46, ''Letter of Intent to Meet Conditions.''

(b) Complete Form RD 1940–1, ''Request for Obligations of Funds.''

(c) Complete FMMI Vendor Code Request Form.

(d) Provide a copy of your organization's Negotiated Indirect Cost Rate Agreement, if applicable.

(e) Certify that all work completed for the award will benefit a rural area.

(f) Certify that you will comply with the Federal Funding Accountability and Transparency Act of 2006 and report information about subawards and executive compensation.

(g) Certify that the U.S. has not obtained an outstanding judgement against your organization in a Federal Court (other than in the United States Tax Court).

(h) Execute Form SF–424B, ''Assurance—Non-Construction Programs.''

(i) Execute Form SF–LLL, ''Disclosure Form to Report Lobbying,'' if applicable, or certify that your organization does not lobby.

(2) The applicant must provide evidence of compliance with other federal statutes, including, but not limited to, the following:

(a) Debarment and suspension information as required in accordance with 2 CFR part 417 (Non-procurement Debarment and Suspension) supplemented by 2 CFR part 180, if applicable. The information required under section heading: ''What information must I provide before entering into a covered transaction with a Federal agency?'' located at 2 CFR 180.335 is part of OMB's Guidance for Grants and Agreements concerning Government-wide Debarment and Suspension.

(b) All of your organization's known workplaces by including the actual addresses of buildings (or parts of buildings) or other sites where work under the award takes place. Workplace identification is required under the drug-free workplace requirements in Subpart B of 2 CFR part 421, which adopts the Governmentwide implementation (2 CFR part 182) of the Drug-Free Workplace Act.

(c) 2 CFR parts 200 and 400 (Uniform Administrative Requirements, Cost Principles and Audit Requirements for Federal Awards).

(d) 2 CFR part 182 (Governmentwide Requirements for Drug-Free Workplace (Financial Assistance)) and 2 CFR part 421 (Requirements for Drug Free Workplace (Financial Assistance)).

(e) Executive Order 13166, ''Improving Access to Services for Persons with Limited English Proficiency.'' For information on limited English proficiency and agency-specific guidance, go to *https://www.lep.gov.*

(3) The following forms for acceptance of a federal award are now collected through your registration or annual recertification in *SAM.gov* in the Financial Assistance General Certifications and Representations section:

- Form RD 400–4, ''Assurance Agreement.''
- Form AD–1047, ''Certification Regarding Debarment, Suspension, and Other Responsibility Matters-Primary Covered Transactions.''
- Form AD–1048, ''Certification Regarding Debarment, Suspension, Ineligibility and Voluntary Exclusion. Lower Tier Covered Transactions.''
- Form AD–1049, ''Certification Regarding Drug-Free Workplace Requirements (Grants).''
- Form AD–3031, ''Assurance Regarding Felony Conviction or Tax Delinquent Status for Corporate Applicants.''

C. Reporting

Grantees shall constantly monitor performance to ensure that time schedules are being met, projected work by time periods are being accomplished, and other performance objectives are being achieved.

(1) SF–PPR ''Performance Progress Report,'' must be submitted quarterly based on the following time periods: January 1—March 31, April 1—June 30, July 1—September 30, and October 1—December 31. Quarterly reports are due within 30 calendar days of the end of the reporting period. A final report is due within 90 calendar days of the completion of the project or the end of the period of performance, whichever comes first. Both quarterly and final performance reports must be submitted electronically to RD.

(2) Financial Report: Form SF–425, ''Federal Financial Report'' must be submitted quarterly based on the following time periods: January 1—March 31, April 1—June 30, July 1—September 30, October 1—December 31. Quarterly reports are due within 30 calendar days of the end of the reporting period. A final report is due within 90 calendar days of the completion of the project or the end of the period of performance, whichever comes first. Both quarterly and final reports must be submitted electronically to RD.

(3) Report Suitable for Public Distribution: A report suitable for public distribution that describes the accomplishments of the project is due within 90 calendar days of the completion of the project. There is no format prescribed for this report, but it is expected that it will be 1–2 pages in length and describe the project in such a way that a member of the public not familiar with the project would gain an understanding of the impact of the project.

VIII. Federal Awarding Agency Contacts

For further information, contact: Gregory Dale (202) 568–9558 or Sherri McCarter (615) 982–2078, email: *RD.RPIC@usda.gov.* Persons with disabilities who require alternative means for communication should contact the USDA Target Center at (202) 720–2600 (voice).

IX. Other Information

A. Paperwork Reduction Act

In accordance with the Paperwork Reduction Act of 1995, the information collection requirement contained in this notice is approved by the Office of Management and Budget under OMB Control Number 0570–0074.

B. Nondiscrimination Statement

In accordance with Federal civil rights law and U.S. Department of Agriculture (USDA) civil rights regulations and policies, the USDA, its agencies, offices, employees, and institutions participating in or administering USDA Programs are prohibited from discriminating based on race, color, national origin, religion, sex, gender identity (including gender expression), sexual orientation, disability, age, marital status, family/parental status, income derived from a public assistance program, political beliefs, or reprisal or retaliation for prior civil rights activity, in any program or activity conducted or funded by USDA (not all bases apply to all programs). Remedies and complaint filing deadlines vary by program or incident.

Persons with disabilities who require alternative means of communication for program information (*e.g.,* Braille, large print, audiotape, American Sign Language) should contact the responsible Agency or USDA's TARGET Center at (202) 720–2600 (voice and TTY) or contact USDA through the Federal Relay Service at (800) 877–8339. Additionally, program information may be made available in languages other than English.

To file a program discrimination complaint, complete the USDA Program Discrimination Complaint Form, AD–3027, found online at *http://www.ascr.usda.gov/complaint_filing_cust.html,* and at any USDA office, or write a letter addressed to USDA and provide in the letter all of the information requested in the form. To request a copy of the complaint form, call (866) 632–9992. Submit your completed form or letter to USDA by:

(1) *Mail:* U.S. Department of Agriculture, Office of the Assistant Secretary for Civil Rights, 1400 Independence Avenue SW, Washington, DC 20250–9410;

(2) *Fax:* (202) 690–7442; or

(3) *Email: program.intake@usda.gov.*

USDA is an equal opportunity provider, employer, and lender.

Justin Maxson,

Deputy Under Secretary, Rural Development, U.S. Department of Agriculture.

[FR Doc. 2022–14028 Filed 6–29–22; 8:45 am]

BILLING CODE 3410–XY–P

DEPARTMENT OF COMMERCE

Foreign-Trade Zones Board

[Order No. 2126]

Expansion of Foreign-Trade Zone 79 under Alternative Site Framework, Tampa, Florida

Pursuant to its authority under the Foreign-Trade Zones Act of June 18, 1934, as amended (19 U.S.C. 81a–81u), the Foreign-Trade Zones Board (the Board) adopts the following Order:

Whereas, the Foreign-Trade Zones (FTZ) Act provides for ''. . . the establishment . . . of foreign-trade zones in ports of entry of the United States, to expedite and encourage foreign commerce, and for other purposes,'' and authorizes the Board to grant to qualified corporations the privilege of establishing foreign-trade zones in or adjacent to U.S. Customs and Border Protection ports of entry;

Whereas, the Board adopted the alternative site framework (ASF) (15 CFR 400.2(c)) as an option for the establishment or reorganization of zones;

Whereas, the City of Tampa, grantee of Foreign-Trade Zone 79, submitted an application to the Board (FTZ Docket B–76–2021, docketed November 16, 2021) for authority to expand existing magnet Site 5 under the ASF to include additional acreage, in or adjacent to the Tampa U.S. Customs and Border Protection port of entry;

Whereas, notice inviting public comment was given in the **Federal Register** (86 FR 66521–66522, November 23, 2021) and the application has been processed pursuant to the FTZ Act and the Board's regulations; and,

Whereas, the Board adopts the findings and recommendations of the examiners' report, and finds that the requirements of the FTZ Act and the Board's regulations are satisfied;

Now, therefore, the Board hereby orders:

The application to expand FTZ 79 under the ASF is approved, subject to the FTZ Act and the Board's regulations, including Section 400.13, to the Board's standard 2,000-acre activation limit for the zone.

Dated: June 25, 2022.

Lisa W. Wang,

Assistant Secretary for Enforcement and Compliance, Alternate Chairman, Foreign-Trade Zones Board.

[FR Doc. 2022–14023 Filed 6–29–22; 8:45 am]

BILLING CODE 3510–DS–P

DEPARTMENT OF COMMERCE

International Trade Administration

[C–570–041]

Truck and Bus Tires From the People's Republic of China: Final Results of the Countervailing Duty Administrative Review; 2020

AGENCY: Enforcement and Compliance, International Trade Administration, Department of Commerce.

SUMMARY: The U.S. Department of Commerce (Commerce) determines that certain exporters/producers of truck and bus tires from the People's Republic of China (China) received countervailable subsidies during the period of review (POR) January 1, 2020, through December 31, 2020. Additionally, we are rescinding the review for eight companies with no shipments of subject merchandise to the United States during the POR.

DATES: Applicable June 30, 2022.

FOR FURTHER INFORMATION CONTACT: Brontee Jeffries or Theodore Pearson, AD/CVD Operations, Enforcement and Compliance, International Trade Administration, U.S. Department of Commerce, 1401 Constitution Avenue NW, Washington, DC 20230; telephone: (202) 482–4656 or (202) 482–2631, respectively.

Background

Commerce published the *Preliminary Results* of this administrative review on March 8, 2022,[1] and invited comments from interested parties. For a complete description of the events that occurred since the *Preliminary Results, see* the Issues and Decision Memorandum.[2]

[1] *See Truck and Bus Tires from the People's Republic of China: Preliminary Results of Countervailing Duty Administrative Review, Rescission of Review in Part, and Intent to Rescind in Part; 2020,* 87 FR 12929 (March 8, 2022) (*Preliminary Results*).

[2] *See* Memorandum, ''Issues and Decision Memorandum for the Final Results of the Countervailing Duty Administrative Review of Truck and Bus Tires from the People's Republic of China,'' concurrently with, and hereby adopted by, this notice.

Scope of the Order

The products covered by the *Order* are truck and bus tires. For a complete description of the scope, *see* the Issues and Decision Memorandum.

Analysis of Comments Received

All issues raised by the interested parties in their case and rebuttal briefs are addressed in the Issues and Decision Memorandum. A list of these issues is provided in Appendix I to this notice. The Issues and Decision Memorandum is a public document and is on file electronically via Enforcement and Compliance's Antidumping and CVD Centralized Electronic Service System (ACCESS). ACCESS is available to registered users at *https://access.trade.gov.* In addition, a complete version of the Issues and Decision Memorandum can be accessed directly at *https://access.trade.gov/public/FRNoticesListLayout.aspx.*

Changes Since the Preliminary Results

Based on comments received from interested parties, we revised the calculation of the net countervailable subsidy rate for Ge Rui Da Rubber Co., Ltd. (GRT). We made no changes for Prinx Chengshan (Shandong) Tire Co., Ltd. For a discussion of the issues, *see* the Issues and Decision Memorandum.

Methodology

Commerce conducted this administrative review in accordance with section 751(a)(1)(A) of the Tariff Act of 1930, as amended (the Act). For each of the subsidy programs found countervailable, we find that there is a subsidy, *i.e.,* a government-provided financial contribution that gives rise to a benefit to the recipient, and that the subsidy is specific.[3] For a full description of the methodology underlying all of Commerce's conclusions, including our reliance, in part, on adverse facts available pursuant to sections 776(a) and (b) of the Act, *see* the Issues and Decision Memorandum.

Partial Rescission of Administrative Review

It is Commerce's practice to rescind an administrative review of a countervailing duty order, pursuant to 19 CFR 351.213(d)(3), when there are no reviewable entries of subject merchandise during the POR for which liquidation is suspended.[4] Normally, upon completion of an administrative review, the suspended entries are liquidated at the countervailing duty assessment rate calculated for the review period.[5] Therefore, for an administrative review of a company to be conducted, there must be a reviewable, suspended entry that Commerce can instruct U.S. Customs and Border Protection (CBP) to liquidate at the countervailing duty assessment rate calculated for the review period.[6]

According to the CBP import data, eight companies subject to this review did not have reviewable entries of subject merchandise during the POR for which liquidation is suspended.[7] Further, in response to the *Preliminary Results,* no party submitted information to contradict the information on the record. Therefore, because there is no evidence on the record of this segment of the proceeding to indicate that these companies had entries, exports, or sales of subject merchandise to the United States during the POR, we are rescinding the administrative review with respect to these companies, consistent with 19 CFR 351.213(d)(3).

Non-Selected Companies' Rate

We made no changes to the methodology for determining a rate for companies not selected for individual examination from the *Preliminary Results.* However, due to changes in calculations for GRT, the non-selected rate changed for each of the eight non-selected companies for which a review was requested and not rescinded, and which were not selected as mandatory respondents. For these companies, we are applying an *ad valorem* subsidy rate of 16.85 percent.

Final Results of the Administrative Review

We find the following net countervailable subsidy rates for the POR January 1, 2020, through December 31, 2020:

Producer/exporter	Subsidy rate (percent *ad valorem*)
Prinx Chengshan (Shandong) Tire Co., Ltd[8]	17.85
Qingdao Ge Rui Da Rubber Co., Ltd[9]	16.76
Review-Specific Average Rate Applicable to the Following Companies	
Jiangsu General Science Technology Co., Ltd	16.85
Jiangsu Hankook Tire Co., Ltd	16.85
Qingdao Awesome International Trade Co., Ltd	16.85
Qingdao Doublestar Tire Industrial Co., Ltd	16.85
Shandong Haohua Tire Co., Ltd	16.85
Shandong Huasheng Rubber Co., Ltd	16.85
Shandong Kaixuan Rubber Co., Ltd	16.85
Triangle Tyre Co., Ltd	16.85

Disclosure

We intend to disclose calculations and analysis performed for these final results of review within five days after the date of publication of this notice in the **Federal Register** in accordance with 19 CFR 351.224(b).

[3] *See* sections 771(5)(B) and (D) of the Act regarding financial contribution; section 771(5)(E) of the Act regarding benefit; and section 771(5A) of the Act regarding specificity.

[4] *See, e.g., Lightweight Thermal Paper from the People's Republic of China: Notice of Rescission of Countervailing Duty Administrative Review; 2015,* 82 FR 14349 (March 20, 2017); *see also Circular Welded Carbon Quality Steel Pipe from the People's Republic of China: Rescission of Countervailing Duty Administrative Review; 2017,* 84 FR 14650 (April 11, 2019).

[5] *See* 19 CFR 351.212(b)(2).

[6] *See* 19 CFR 351.213(d)(3).

[7] The eight companies are: Chongqing Hankook Tire Co., Ltd.; Guangrao Kaichi Trading Co., Ltd.; Qingdao Fullrun Tyre Corp. Ltd.; Qingdao Honghuasheng Trade Co., Ltd.; Qingdao Kapsen Trade Co., Ltd.; Qingdao Sunfulcess Tyre Co., Ltd.; Shandong Habilead Rubber Co., Ltd.; and Shandong Qilun Rubber Co., Ltd.

[8] Cross-owned affiliates are Chengshan Group Co., Ltd.; Shanghai Chengzhan Information and Technology Center; Prinx Chengshan (Qingdao) Industrial Research & Design Co., Ltd.; and Shandong Prinx Chengshan Tire Technology Research Co., Ltd.

[9] Cross-owned affiliates are Cooper Tire (China) Investment Co. Ltd.; Cooper Tire Asia-Pacific (Shanghai) Trading Co., Ltd.; Cooper (Kunshan) Tire Co., Ltd.; and Qingdao Yiyuan Investment Co., Ltd.

Assessment Requirements

In accordance with section 751(a)(2)(C) of the Act and 19 CFR 351.212(b)(2), Commerce shall determine, and CBP shall assess, countervailing duties on all appropriate entries covered by this review. Commerce intends to issue assessment instructions to CBP no earlier than 35 days after publication of the final results of this review in the **Federal Register**. If a timely summons is filed at the U.S. Court of International Trade, the assessment instructions will direct CBP not to liquidate relevant entries until the time for parties to file a request for a statutory injunction has expired (*i.e.,* within 90 days of publication).

With respect to the companies for which this administrative review is rescinded, countervailing duties shall be assessed at rates equal to the cash deposit rate required at the time of entry, or withdrawal from warehouse, for consumption, during the period January 1, 2020, through December 31, 2020, in accordance with 19 CFR 351.212(c)(1)(i).

Cash Deposit Requirements

In accordance with section 751(a)(1) of the Act, we also intend to instruct CBP to collect cash deposits of estimated countervailing duties in the amounts shown above for the above-listed companies with regard to shipments of subject merchandise entered, or withdrawn from warehouse, for consumption on or after the date of publication of these final results of review. For all non-reviewed firms, CBP will continue to collect cash deposits of estimated countervailing duties at the all-others rate or the most recent company-specific rate applicable to the company, as appropriate. These cash deposit requirements, when imposed, shall remain in effect until further notice.

Administrative Protective Order

This notice also serves as a final reminder to parties subject to an administrative protective order (APO) of their responsibility concerning the disposition of proprietary information disclosed under APO in accordance with 19 CFR 351.305(a)(3). Timely written notification of the return or destruction of APO materials or conversion to judicial protective order, is hereby requested. Failure to comply with the regulations and terms of an APO is a sanctionable violation.

Notification to Interested Parties

The final results are issued and published in accordance with sections 751(a)(1) and 777(i)(1) of the Act, and 19 CFR 351.213(d)(4) and 19 CFR 351.221(b)(5).

Dated: June 24, 2022.

Lisa W. Wang,

Assistant Secretary for Enforcement and Compliance.

Appendix

List of Topics Discussed in the Issues and Decision Memorandum

I. Summary
II. Background
III. Scope of the *Order*
IV. Rescission of Administrative Review, In Part
V. Non-Selected Rate
VI. Subsidies Valuation
VII. Use of Facts Otherwise Available and Application of Adverse Inferences
VIII. Analysis of Programs
IX. Analysis of Comments
  Comment 1: Whether the Provision of Inputs for Less Than Adequate Remuneration (LTAR) Constitutes a Financial Contribution
  Comment 2: Whether the Export Buyer's Credit (EBC) Program Is Countervailable
  Comment 3: Whether Commerce Appropriately Found That the Provision of Land Use Rights to Qingdao Ge Rui Da Rubber Co., Ltd. (GRT) Constitutes a Financial Contribution
  Comment 4: Whether Cooper Tire (China) Investment Co. Ltd. (CTIC) Is Creditworthy
  Comment 5: Whether Commerce Should Alter the Benchmark for Ocean Freight
  Comment 6: Whether the Benchmark for Electricity Includes Value Added Tax (VAT)
  Comment 7: Whether Commerce Should Alter the Benchmarks for Synthetic Rubber and Butadiene
  Comment 8: Whether Commerce Should Correct the Calculations of the Economic Development for CTIC Program
  Comment 9: Whether Commerce Should Correct Calculations for the Provision of Land-Use Rights
X. Recommendation

[FR Doc. 2022–14024 Filed 6–29–22; 8:45 am]

BILLING CODE 3510–DS–P

DEPARTMENT OF COMMERCE

National Oceanic and Atmospheric Administration

[RTID 0648–XC140]

Marine Mammals; File No. 26447

AGENCY: National Marine Fisheries Service (NMFS), National Oceanic and Atmospheric Administration (NOAA), Commerce.

ACTION: Notice; receipt of application.

SUMMARY: Notice is hereby given that the National Museum of Natural History (Kirk Johnson, Ph.D., Responsible Party) P.O. Box 37012, Washington, DC 20013 has applied in due form for a permit to receive, import, and export marine mammal parts for scientific research.

DATES: Written, telefaxed, or email comments must be received on or before August 1, 2022.

ADDRESSES: The application and related documents are available for review by selecting ''Records Open for Public Comment'' from the ''Features'' box on the Applications and Permits for Protected Species (APPS) home page, *https://apps.nmfs.noaa.gov,* and then selecting File No. 26447 from the list of available applications. These documents are also available upon written request via email to *NMFS.Pr1Comments@noaa.gov.*

Written comments on this application should be submitted via email to *NMFS.Pr1Comments@noaa.gov.* Please include File No. 26447 in the subject line of the email comment.

Those individuals requesting a public hearing should submit a written request via email to *NMFS.Pr1Comments@noaa.gov.* The request should set forth the specific reasons why a hearing on this application would be appropriate.

FOR FURTHER INFORMATION CONTACT: Jennifer Skidmore or Shasta McClenahan, Ph.D., (301) 427–8401.

SUPPLEMENTARY INFORMATION: The subject permit is requested under the authority of the Marine Mammal Protection Act of 1972, as amended (MMPA; 16 U.S.C. 1361 *et seq.*), the regulations governing the taking and importing of marine mammals (50 CFR part 216), the Endangered Species Act of 1973, as amended (ESA; 16 U.S.C. 1531 *et seq.*), the regulations governing the taking, importing, and exporting of endangered and threatened species (50 CFR parts 222–226), and the Fur Seal Act of 1966, as amended (16 U.S.C. 1151 *et seq.*).

The applicant proposes to receive, import, and export marine mammal parts worldwide from up to 1,000 cetaceans and 1,000 pinnipeds (excluding walrus) annually for scientific research, curation, and education. Sources of foreign and domestic samples may include subsistence harvests, captive animals, other authorized researchers or curated collections, bycatch from legal commercial fishing operations, seizures from law enforcement, and foreign stranded animals. The requested duration of the permit is 5 years.

In compliance with the National Environmental Policy Act of 1969 (42 U.S.C. 4321 *et seq.*), an initial determination has been made that the activities proposed are categorically excluded from the requirement to

prepare an environmental assessment or environmental impact statement.

Concurrent with the publication of this notice in the **Federal Register**, NMFS is forwarding copies of the application to the Marine Mammal Commission and its Committee of Scientific Advisors.

Dated: June 27, 2022.

Julia M. Harrison,

Chief, Permits and Conservation Division, Office of Protected Resources, National Marine Fisheries Service.

[FR Doc. 2022–14029 Filed 6–29–22; 8:45 am]

BILLING CODE 3510–22–P

DEPARTMENT OF COMMERCE

National Oceanic and Atmospheric Administration

[RTID 0648–XC125]

Pacific Fishery Management Council; Public Meetings

AGENCY: National Marine Fisheries Service (NMFS), National Oceanic and Atmospheric Administration (NOAA), Commerce.

ACTION: Notice of a public meeting.

SUMMARY: The Pacific Fishery Management Council's (Pacific Council) Salmon Technical Team (STT) and Model Evaluation Workgroup (MEW) will hold a joint meeting in preparation for the September 2022 Pacific Council meeting. The meeting is open to the public.

DATES: The online meeting will be held on Wednesday, July 20, 2022, from 9 a.m. until 3 p.m., Pacific Time, or until business in completed.

ADDRESSES: This meeting will be held online. Specific meeting information, including directions on how to join the meeting and system requirements will be provided in the meeting announcement on the Pacific Council's website (see *www.pcouncil.org*). You may send an email to Mr. Kris Kleinschmidt (*kris.kleinschmidt@noaa.gov*) or contact him at (503) 820–2412 for technical assistance.

Council address: Pacific Fishery Management Council, 7700 NE Ambassador Place, Suite 101, Portland, OR 97220.

FOR FURTHER INFORMATION CONTACT: Ms. Robin Ehlke, Staff Officer, Pacific Council; telephone: (503) 820–2410.

SUPPLEMENTARY INFORMATION: In preparation for the September 2022 Pacific Council meeting, the STT will continue to investigate the accuracy of and consider potential improvements to recent preseason effort projections produced by the Klamath Ocean Harvest Model during the preseason management process. The STT and MEW will continue the discussion on the work required and timeline necessary to investigate the potential for improvements to forecasts of ocean exploitation rates for Southern Oregon/Northern California Coast coho salmon.

Discussions may include additional topics as time allows, including but not limited to administrative and ecosystem matters on the Pacific Council's September 2022 meeting, and various salmon related topics of pertinence.

Although non-emergency issues not contained in the STT meeting agendas may come before the STT for discussion, those issues may not be the subject of formal STT action during these meetings. STT action will be restricted to those issues specifically listed in this document and to any issues arising after publication of this document requiring emergency action under Section 305(c) of the Magnuson-Stevens Fishery Conservation and Management Act, provided the public has been notified of the STT's intent to take final action to address the emergency.

Special Accommodations

Requests for sign language interpretation or other auxiliary aids should be directed to Mr. Kris Kleinschmidt (*kris.kleinschmidt@noaa.gov;* (503) 820–2412) at least 10 days prior to the meeting date.

(Authority: 16 U.S.C. 1801 *et seq.*)

Dated: June 24, 2022.

Tracey L. Thompson,

Acting Deputy Director, Office of Sustainable Fisheries, National Marine Fisheries Service.

[FR Doc. 2022–13966 Filed 6–29–22; 8:45 am]

BILLING CODE 3510–22–P

DEPARTMENT OF COMMERCE

National Oceanic and Atmospheric Administration

[RTID 0648–XC127]

Marine Mammals; File No. 21476

AGENCY: National Marine Fisheries Service (NMFS), National Oceanic and Atmospheric Administration (NOAA), Commerce.

ACTION: Notice; receipt of application for permit amendment.

SUMMARY: Notice is hereby given that Lars Bejder, Ph.D., University of Hawaii at Manoa, 46–007 Lilipuna Road, Kaneohe, HI 96744, has applied for an amendment to scientific research Permit No. 21476–01.

DATES: Written, telefaxed, or email comments must be received on or before August 1, 2022.

ADDRESSES: The application and related documents are available for review by selecting ''Records Open for Public Comment'' from the ''Features'' box on the Applications and Permits for Protected Species (APPS) home page, *https://apps.nmfs.noaa.gov,* and then selecting File No. 21476 from the list of available applications. These documents are also available upon written request via email to *NMFS.Pr1Comments@noaa.gov.*

Written comments on this application should be submitted via email to *NMFS.Pr1Comments@noaa.gov.* Please include File No. 21476 in the subject line of the email comment.

Those individuals requesting a public hearing should submit a written request via email to *NMFS.Pr1Comments@noaa.gov.* The request should set forth the specific reasons why a hearing on this application would be appropriate.

FOR FURTHER INFORMATION CONTACT: Shasta McClenahan, Ph.D., or Carrie Hubard, (301) 427–8401.

SUPPLEMENTARY INFORMATION: The subject amendment to Permit No. 21476–01 is requested under the authority of the Marine Mammal Protection Act of 1972, as amended (16 U.S.C. 1361 *et seq.*), the regulations governing the taking and importing of marine mammals (50 CFR part 216), the Endangered Species Act of 1973, as amended (16 U.S.C. 1531 *et seq.*), and the regulations governing the taking, importing, and exporting of endangered and threatened species (50 CFR parts 222–226).

Permit No. 21476, issued on August 27, 2019 (84 FR 48600) and amendment No. 21476–01 issued on November 6, 2020 (85 FR 79169), authorizes the permit holder to conduct research on 32 species of marine mammals including the following ESA-listed species: blue (*Balaenoptera musculus*), bowhead (*Balaena mysticetus*), fin (*B. physalus*), Hawaiian insular false killer (*Pseudorca crassidens*), humpback (*Megaptera novaeangliae*), sei (*B. borealis*), sperm (*Physeter macrocephalus*), and Western North Pacific gray (*Eschrichtius robustus*) whales. Authorized research may occur in U.S. and international waters of the Pacific Ocean near Hawaii, Alaska, and U.S. territories. Permitted research activities during unmanned aerial surveys and vessel surveys include photography and video recording (above water and underwater), photogrammetry, counts, passive acoustic recording, biological sampling (skin and blubber biopsy, sloughed skin,

exhaled air, and feces), and suction-cup tagging.

The permit holder is requesting the permit be amended to increase the authorized takes from 1,000 to 3,000 annually for Level B harassment activities for humpback whales in Hawaii. No changes to the permitted objectives, methods, or locations are proposed. The permit expires on August 31, 2024.

In compliance with the National Environmental Policy Act of 1969 (42 U.S.C. 4321 *et seq.*), an initial determination has been made that the activity proposed is categorically excluded from the requirement to prepare an environmental assessment or environmental impact statement.

Concurrent with the publication of this notice in the **Federal Register**, NMFS is forwarding copies of this application to the Marine Mammal Commission and its Committee of Scientific Advisors.

Dated: June 27, 2022.

Julia M. Harrison,

Chief, Permits and Conservation Division, Office of Protected Resources, National Marine Fisheries Service.

[FR Doc. 2022–14030 Filed 6–29–22; 8:45 am]

BILLING CODE 3510–22–P

DEPARTMENT OF COMMERCE

National Telecommunications and Information Administration

Commerce Spectrum Management Advisory Committee Meeting

AGENCY: National Telecommunications and Information Administration, U.S. Department of Commerce.

ACTION: Notice, correction.

SUMMARY: The National Telecommunications and Information Administration (NTIA) published a document in the **Federal Register** of June 21, 2022, announcing a public meeting of the Commerce Spectrum Management Advisory Committee (Committee). This document contained the incorrect date for the meeting. The correct meeting date is July 15, 2022.

FOR FURTHER INFORMATION CONTACT: Antonio Richardson, Designated Federal Officer, at (202) 482–4156 or *richardson@ntia.gov;* and/or visit NTIA's website at *https://www.ntia.gov/category/csmac.*

SUPPLEMENTARY INFORMATION:

Correction

In the **Federal Register** of June 21, 2022, in FR Doc. 2022–13155, on page 36827, in the third column, correct the **DATES** caption to read:

DATES: The meeting will be held July 15, 2022, from 1:00 p.m. to 3:00 p.m., Eastern Daylight Time (EDT).

Josephine Arnold,

Acting Chief Counsel, National Telecommunications and Information Administration.

[FR Doc. 2022–14001 Filed 6–29–22; 8:45 am]

BILLING CODE 3510–60–P

BUREAU OF CONSUMER FINANCIAL PROTECTION

Advisory Committees Solicitation of Applications for Membership

AGENCY: Bureau of Consumer Financial Protection.

ACTION: Notice.

SUMMARY: Pursuant to the authorities given to the Director of the Consumer Financial Protection Bureau (Bureau) under the Wall Street Reform and Consumer Protection Act (Dodd-Frank Act), Director Chopra invites the public to apply for membership for appointment to its Consumer Advisory Board (CAB), Community Bank Advisory Council (CBAC), Credit Union Advisory Council (CUAC), and Academic Research Council (ARC), (collectively, advisory committees). Membership of the advisory committees includes representatives of consumers, diverse communities, the financial services industry, academics, and economists. Appointments to the committees are generally for two years. However, the Director may amend the respective committee charters from time to time during the charter terms, as the Director deems necessary to accomplish the purpose of the committees. The Bureau expects to announce the selection of new members in fall 2022.

DATES: The application will be available on July 5, 2022, here: *https://acam.consumerfinance.gov/.* Complete application packets received on or before 11:59 p.m. EST on July 24, 2022, will be given consideration for membership on the committees.

ADDRESSES: If an applicant requires a reasonable accommodation to complete the application, please contact Kimberley Medrano, Senior Advisor, at *CFPB_BoardandCouncilApps@cfpb.gov.*

All applications for membership on the advisory committees should be sent:

- *Electronically: https://acam.consumerfinance.gov/.*
- *Mail/Hand Delivery/Courier:* Kimberley Medrano, Senior Advisor, Consumer Financial Protection Bureau, 1700 G Street NW, Washington, DC 20552. Submissions must be received on or before 5:00 p.m. eastern standard time on July 24, 2022; submissions by mail must be postmarked on or before July 24, 2022. Please note that due to circumstances associated with the COVID–19 pandemic, the Bureau discourages the submission of comments by mail, hand delivery, or courier.

FOR FURTHER INFORMATION CONTACT: Kimberley Medrano, Senior Advisor, 202–435–9623, *CFPB_BoardandCouncilApps@cfpb.gov.*

SUPPLEMENTARY INFORMATION:

I. Background

The Bureau is charged with regulating ''the offering and provision of consumer financial products or services under the Federal consumer financial laws,'' so as to ensure that ''all consumers have access to markets for consumer financial products and services and that markets for consumer financial products and services are fair, transparent, and competitive.'' Pursuant to section 1021(c) of the Wall Street Reform and Consumer Protection Act, Public Law 111–203, Dodd-Frank Act, the Bureau's primary functions are:

1. Conducting financial education programs;
2. Collecting, investigating, and responding to consumer complaints;
3. Collecting, researching, monitoring, and publishing information relevant to the function of markets for consumer financial products and services to identify risks to consumers and the proper functioning of such markets;
4. Supervising persons covered under the Dodd-Frank Act for compliance with Federal consumer financial law, and taking appropriate enforcement action to address violations of Federal consumer financial law;
5. Issuing rules, orders, and guidance implementing Federal consumer financial law; and
6. Performing such support activities as may be needed or useful to facilitate the other functions of the Bureau.

As described in more detail below, section 1014 of the Dodd-Frank Act calls for the Director of the Bureau to establish a Consumer Advisory Board to advise and consult with the Bureau regarding its functions, and to provide information on emerging trends and practices in the consumer financial markets.

Pursuant to the executive and administrative powers conferred on the Bureau by section 1012 of the Dodd-Frank Act, the Director of the Consumer Financial Protection Bureau established

the discretionary committees, CBAC, CUAC, and ARC, under agency authority in accordance with the provisions of the Federal Advisory Committee Act, as amended, 5 U.S.C., app. 2.

II. Qualifications

Pursuant to section 1014(b) of the Dodd-Frank Act, in appointing members to the Consumer Advisory Board, ''the Director shall seek to assemble experts in consumer protection, financial services, community development, fair lending and civil rights, and consumer financial products or services and representatives of depository institutions that primarily serve underserved communities, and representatives of communities that have been significantly impacted by higher-priced mortgage loans, and seek representation of the interests of covered persons and consumers, without regard to party affiliation.'' The determinants of ''expertise'' shall depend, in part, on the constituency, interests, or industry sector the nominee seeks to represent, and where appropriate, shall include significant experience as a direct service provider to consumers.

Pursuant to section 12 of the Community Bank Advisory Council Charter, in appointing members to the committee the Director shall seek to assemble members with diverse points of view, institution asset sizes, and geographical backgrounds. Only bank or thrift employees (CEOs, compliance officers, government relations officials, etc.) will be considered for membership. Membership is limited to employees of banks and thrifts with total assets of $10 billion or less that are not affiliates of depository institutions or community banks with total assets of more than $10 billion.

Pursuant to section 12 of the Credit Union Advisory Council Charter, in appointing members to the committee the Director shall seek to assemble members with diverse points of view, institution asset sizes, and geographical backgrounds. Only credit union employees (CEOs, compliance officers, government relations officials, etc.) will be considered for membership. Membership is limited to employees of credit unions with total assets of $10 billion or less that are not affiliates of depository institutions or credit unions with total assets of more than $10 billion.

Pursuant to section 12 of the Academic Research Council Charter, in appointing members to the committee the Director shall seek to assemble members who are economic experts and academics with diverse points of view; such as experienced economists with a strong research and publishing background, and a record of involvement in research and public policy, including public or academic service. Additionally, members should be prominent experts who are recognized for their professional achievements and rigorous economic analysis including those specializing in household finance, finance, financial education, labor economics, industrial organization, public economics, and law and economics; and experts from related social sciences related to the Bureau's mission. In particular, the Director will seek to identify academics with strong methodological and technical expertise in structural or reduced form econometrics; modeling of consumer decision-making; survey and random controlled trial methods; benefit cost analysis, welfare economics and program evaluation; or marketing.

The Bureau has a special interest in ensuring that the perspectives of women and men, all racial and ethnic groups, and individuals with disabilities are adequately represented on the advisory committees, and therefore, encourages applications from qualified candidates from these groups. The Bureau also has a special interest in establishing advisory committees that are represented by a diversity of viewpoints and constituencies, and therefore encourages applications from qualified candidates who:

1. Represent the United States' geographic diversity; and
2. Represent the interests of special populations identified in the Dodd-Frank Act, including service members, older Americans, students, and traditionally underserved consumers and communities.

III. Application Procedures

Any interested person may apply for membership on the committees.

A complete application (*https://acam.consumerfinance.gov/*) must include:

1. A cover letter, which summarizes the applicant's expertise and provides reason(s) why he or she would like to join the committee;
2. A complete résumé or curriculum vitae for the applicant;
3. A recommendation letter from a third party describing the applicant's interests and qualifications to serve on the committee; and
4. A complete questionnaire.

To evaluate potential sources of conflicts of interest, the Bureau will ask potential candidates to provide information related to financial holdings and/or professional affiliations, and to allow the Bureau to perform a background check. The Bureau will not review applications and will not answer questions from internal or external parties regarding applications until the application period has closed.

The Bureau does not accept applications from federally registered lobbyists, convicted felons or current elected officials for a position on the advisory committees.

Only complete applications will be given consideration for membership on the advisory committees.

Jocelyn Sutton,

Deputy Chief of Staff, Consumer Financial Protection Bureau.

[FR Doc. 2022–13737 Filed 6–29–22; 8:45 am]

BILLING CODE 4810–AM–P

CONSUMER PRODUCT SAFETY COMMISSION

[Docket No. CPSC–2015–0028]

Notice of Availability and Request for Comment: Revision to the Voluntary Standard for Infant Bouncers Seats

AGENCY: Consumer Product Safety Commission.

ACTION: Notice of availability and request for comment.

SUMMARY: The U.S. Consumer Product Safety Commission's (Commission or CPSC) mandatory rule, Safety Standard for Infant Bouncer Seats, incorporates by reference ASTM F2167–19, Standard Consumer Safety Specification for Infant Bouncer Seats. The Commission has received notice of a revision to this incorporated voluntary standard. CPSC seeks comment on whether the revision improves the safety of the consumer products covered by the standard.

DATES: Comments must be received by July 14, 2022.

ADDRESSES: Submit comments, identified by Docket No. CPSC–2015–0028, by any of the following methods:

Electronic Submissions: Submit electronic comments to the Federal eRulemaking Portal at: *https://www.regulations.gov.* Follow the instructions for submitting comments. CPSC typically does not accept comments submitted by electronic mail (email), except as described below. CPSC encourages you to submit electronic comments by using the Federal eRulemaking Portal.

Mail/hand delivery/courier/confidential Written Submissions: Submit comments by mail, hand delivery, or courier to: Division of the

Secretariat, Consumer Product Safety Commission, 4330 East West Highway, Bethesda, MD 20814; telephone: (301) 504–7479. If you wish to submit confidential business information, trade secret information, or other sensitive or protected information that you do not want to be available to the public, you may submit such comments by mail, hand delivery, courier, or you may email them to: *cpsc-os@cpsc.gov.*

Instructions: All submissions must include the agency name and docket number. CPSC may post all comments without change, including any personal identifiers, contact information, or other personal information provided, to: *https://www.regulations.gov.* Do not submit through this website confidential business information, trade secret information, or other sensitive or protected information that you do not want to be available to the public. If you wish to submit such information, please submit it according to the instructions for mail/hand delivery/courier/confidential written submissions.

Docket: For access to the docket to read background documents or comments received, go to: *https://www.regulations.gov,* and insert the docket number, CPSC–2015–0028, into the ''Search'' box, and follow the prompts.

FOR FURTHER INFORMATION CONTACT: Suad C. Wanna-Nakamura, Project Manager, Directorate for Health Sciences, U.S. Consumer Product Safety Commission, 5 Research Place, Rockville, MD 20850; telephone: (301) 987–2550; email: *snakamura@cpsc.gov.*

SUPPLEMENTARY INFORMATION: Section 104(b) of the Consumer Product Safety Improvement Act of 2008 (CPSIA) requires the Commission to adopt mandatory standards for durable infant or toddler products. 15 U.S.C. 2056a(b)(1). Mandatory standards must be ''substantially the same as'' voluntary standards, or may be ''more stringent'' than voluntary standards, if the Commission determines that more stringent requirements would further reduce the risk of injury associated with the products. *Id.* Mandatory standards may be based, in whole or in part, on a voluntary standard.

Pursuant to section 104(b)(4)(B) of the CPSIA, if a voluntary standards organization revises a standard that has been adopted, in whole or in part, as a consumer product safety standard under CPSIA section 104, it must notify the Commission. The revised voluntary standard then shall be considered to be a consumer product safety standard issued by the Commission under section 9 of the Consumer Product Safety Act (15 U.S.C. 2058), effective 180 days after the date on which the organization notifies the Commission (or a later date specified by the Commission in the **Federal Register**) unless, within 90 days after receiving that notice, the Commission responds to the organization that it has determined that the proposed revision does not improve the safety of the consumer product covered by the standard, and therefore, the Commission is retaining its existing mandatory consumer product safety standard. 15 U.S.C. 2056a(b)(4)(B).

Under this authority, the Commission issued a mandatory safety rule for infant bouncer seats in 2017. The rulemaking created 16 CFR part 1229, which incorporated by reference ASTM F2167–17, Standard Consumer Safety Specification for Infant Bouncer Seats. 82 FR 43470 (Sep. 18, 2017). The mandatory standard included performance requirements and test methods, as well as requirements for warning labels and instructions, to address hazards to children associated with infant bouncer seats. Since promulgation of the final rule, ASTM revised the voluntary standard in May 2019. In September 2019, the Commission revised the mandatory standard to incorporate by reference ASTM F2167–19. 84 FR 46878 (Sep. 6, 2019).

In May 2022, ASTM published a revised version of the incorporated voluntary standard. On June 22, 2022, ASTM notified the Commission that it had approved the revised version of the voluntary standard. CPSC staff is assessing the revised voluntary standard to determine, consistent with section 104(b)(4)(B) of the CPSIA, its effect on the safety of the consumer product covered by the standard. The Commission invites public comment on that question to inform staff's assessment and any subsequent Commission consideration of the revisions in ASTM F2167–22.[1]

The existing voluntary standard and the revised voluntary standard are available for review in several ways. ASTM has provided on its website (*https://www.astm.org/CPSC.htm*), at no cost, a read-only copy of ASTM F2167–22 and a red-lined version that identifies the changes made to ASTM F–2167–19. Likewise, a read-only copy of the existing, incorporated standard is available for viewing, at no cost, on the ASTM website at: *https://www.astm.org/READINGLIBRARY/.*

[1] The Commission voted 3–0–1 to approve this notice. Chair Hoehn-Saric, Commissioners Baiocco and Feldman voted to approve publication of the notice as drafted. Commissioner Trumka did not vote.

Interested parties can also download copies of the standards by purchasing them from ASTM International, 100 Barr Harbor Drive, P.O. Box C700, West Conshohocken, PA 19428–2959; phone: 610–832–9585; *https://www.astm.org.* Alternatively, interested parties can schedule an appointment to inspect copies of the standards at CPSC's Division of the Secretariat, U.S. Consumer Product Safety Commission, 4330 East West Highway, Bethesda, MD 20814, telephone: 301–504–7479; email: *cpsc-os@cpsc.gov.*

Comments must be received by July 14, 2022. Because of the short statutory time frame Congress established for the Commission to consider revised voluntary standards under section 104(b)(4) of the CPSIA, CPSC will not consider comments received after this date.

Alberta E. Mills,

Secretary, Consumer Product Safety Commission.

[FR Doc. 2022–13999 Filed 6–29–22; 8:45 am]

BILLING CODE 6355–01–P

CORPORATION FOR NATIONAL AND COMMUNITY SERVICE

Agency Information Collection Activities; Submission to the Office of Management and Budget for Review and Approval; Comment Request; Request for Medical or Religious Reasonable Accommodation

AGENCY: Corporation for National and Community Service.

ACTION: Notice of information collection; request for comment.

SUMMARY: The Corporation for National and Community Service, operating as AmeriCorps, has submitted a public information collection request (ICR) entitled Request for Medical or Religious Reasonable Accommodation for review and approval in accordance with the Paperwork Reduction Act.

DATES: Written comments must be submitted to the individual and office listed in the **ADDRESSES** section by August 1, 2022.

ADDRESSES: Written comments and recommendations for the proposed information collection should be sent within 30 days of publication of this notice to *www.reginfo.gov/public/do/PRAMain.* Find this particular information collection by selecting ''Currently Under 30-Day Review—Open for Public Comments'' or by using the search function.

FOR FURTHER INFORMATION CONTACT: Copies of this ICR, with applicable

supporting documentation, may be obtained by calling the Corporation for National and Community Service, Lisa Gray, 202–308–9304, or by email to *LiGray@cns.gov.*

SUPPLEMENTARY INFORMATION: The OMB is particularly interested in comments which:

- Evaluate whether the proposed collection of information is necessary for the proper performance of the functions of CNCS, including whether the information will have practical utility;
- Evaluate the accuracy of the agency's estimate of the burden of the proposed collection of information, including the validity of the methodology and assumptions;
- Propose ways to enhance the quality, utility, and clarity of the information to be collected; and
- Propose ways to minimize the burden of the collection of information on those who are to respond, including through the use of appropriate automated, electronic, mechanical, or other technological collection techniques or other forms of information technology.

Comments

A 60-day Notice requesting public comment was published in the **Federal Register** on March 14, 2022 at 87 FR 14256. The comment period ended May 13, 2022. No comments were received in response to that notice.

Title of Collection: Request for Medical or Religious Reasonable Accommodation.

OMB Control Number: 3045–0196.

Type of Review: Revision.

Respondents/Affected Public: Individuals.

Total Estimated Number of Annual Responses: 40.

Total Estimated Number of Annual Burden Hours: 70.

Abstract: AmeriCorps seeks to revise the current information collection, which was for requests for health and religious accommodations that were specific to seeking exemptions from the COVID–19 vaccination requirement, but with this revision, AmeriCorps is revising the forms to cover all requests for health and religious accommodations. This information collection allows AmeriCorps to collect information in support of individuals' requests for religious and medical accommodations, made for sincerely held religious beliefs, practices, or observances. The forms associated with this system of records will facilitate the processing of requests for accommodations. These forms allow AmeriCorps to collect information in support of individuals' requests for any religious and medical accommodation, so that AmeriCorps can act on those requests as appropriate. The information is collected on two separate forms: one for requests for religious accommodation and one for requests for medical accommodation. The current information collection is due to expire on June 30, 2022.

Lisa Gray,

Acting Director of Civil Rights.

[FR Doc. 2022–13967 Filed 6–29–22; 8:45 am]

BILLING CODE 6050–28–P

DEPARTMENT OF DEFENSE

Department of the Air Force

[Docket ID: USAF–2022–HQ–0005]

Submission for OMB Review; Comment Request

AGENCY: Department of the Air Force, Department of Defense (DoD).

ACTION: 30-Day information collection notice.

SUMMARY: The Department of Defense has submitted to OMB for clearance the following proposal for collection of information under the provisions of the Paperwork Reduction Act.

DATES: Consideration will be given to all comments received by August 1, 2022.

ADDRESSES: Written comments and recommendations for the proposed information collection should be sent within 30 days of publication of this notice to *www.reginfo.gov/public/do/PRAMain.* Find this particular information collection by selecting ''Currently under 30-day Review—Open for Public Comments'' or by using the search function.

FOR FURTHER INFORMATION CONTACT: Angela Duncan, 571–372–7574, *whs.mc-alex.esd.mbx.dd-dod-information-collections@mail.mil.*

SUPPLEMENTARY INFORMATION:

Title; Associated Form; and OMB Number: Emergency Mass Notification System; OMB Control Number 0701–0162.

Type of Request: Extension.

Number of Respondents: 1,000,000.

Responses per Respondent: 1.

Annual Responses: 1,000,000.

Average Burden per Response: 1 minute.

Annual Burden Hours: 16,667 hours.

Needs and Uses: The Air Force Life Cycle Management Center Command, Control, Communications, Intelligence, and Networks Directorate provides standardized enterprise capabilities across the entire U.S Air Force (AF) in accordance with AF Instruction 10–206, Operational Reporting, as authorized by 5 U.S.C. 7902—Safety Programs and 10 U.S.C. 9013—Secretary of the Air Force. This effort will implement and sustain a cloud based, enterprise-wide AF solution for the Emergency Mass Notification System (EMNS). The AF requires a single notification system to send alert notifications to assigned military personnel, family members, and contractors quickly and effectively in an emergent event. The EMNS will increase the situational awareness for Airmen families and contractors, regardless of their physical location, to enable protective measures when tragic events or emergencies occur. This effort will address the gaps in the notification process.

Affected Public: Individuals or households.

Frequency: On occasion.

Respondent's Obligation: Voluntary.

OMB Desk Officer: Ms. Jasmeet Seehra.

You may also submit comments and recommendations, identified by Docket ID number and title, by the following method:

- *Federal eRulemaking Portal: http://www.regulations.gov.* Follow the instructions for submitting comments.

Instructions: All submissions received must include the agency name, Docket ID number, and title for this **Federal Register** document. The general policy for comments and other submissions from members of the public is to make these submissions available for public viewing on the internet at *http://www.regulations.gov* as they are received without change, including any personal identifiers or contact information.

DOD Clearance Officer: Ms. Angela Duncan.

Requests for copies of the information collection proposal should be sent to Ms. Duncan at *whs.mc-alex.esd.mbx.dd-dod-information-collections@mail.mil.*

Dated: June 24, 2022.

Aaron T. Siegel,

Alternate OSD Federal Register Liaison Officer, Department of Defense.

[FR Doc. 2022–13978 Filed 6–29–22; 8:45 am]

BILLING CODE 5001–06–P

DEPARTMENT OF DEFENSE

Department of the Army

[Docket ID: USA–2022–HQ–0008]

Submission for OMB Review; Comment Request

AGENCY: United States Transportation Command (USTRANSCOM), Department of Defense (DoD).

ACTION: 30-Day information collection notice.

SUMMARY: The Department of Defense has submitted to OMB for clearance the following proposal for collection of information under the provisions of the Paperwork Reduction Act.

DATES: Consideration will be given to all comments received by August 1, 2022.

ADDRESSES: Written comments and recommendations for the proposed information collection should be sent within 30 days of publication of this notice to *www.reginfo.gov/public/do/PRAMain.* Find this particular information collection by selecting ''Currently under 30-day Review—Open for Public Comments'' or by using the search function.

FOR FURTHER INFORMATION CONTACT: Angela Duncan, 571–372–7574, *whs.mc-alex.esd.mbx.dd-dod-information-collections@mail.mil.*

SUPPLEMENTARY INFORMATION:

Title; Associated Form; and OMB Number: Department of Defense Standard Tender of Freight Services; SDDC Form 364–R; OMB Control Number 0702–0146.

Type of Request: Extension.

Number of Respondents: 82,053.

Responses per Respondent: 1.

Annual Responses: 82,053.

Average Burden per Response: 20 minutes.

Annual Burden Hours: 27,351.

Needs and Uses: The information derived from the DoD tenders on file with the Military Surface Deployment and Distribution Command (SDDC) is used by SDDC subordinate commands and DoD shippers to select the best value carriers to transport surface freight shipments. Freight carriers furnish information in a uniform format so that the Government can determine the cost of transportation, accessorial, and security services, and select the best value carriers for 1.1 million Bill of Lading shipments annually. The DoD tender is the source document for the General Services Administration post-shipment audit of carrier freight bills.

Affected Public: Business or other for-profit.

Frequency: On occasion.

Respondent's Obligation: Voluntary.

OMB Desk Officer: Ms. Jasmeet Seehra.

You may also submit comments and recommendations, identified by Docket ID number and title, by the following method:

• *Federal eRulemaking Portal: http://www.regulations.gov.* Follow the instructions for submitting comments.

Instructions: All submissions received must include the agency name, Docket ID number, and title for this **Federal Register** document. The general policy for comments and other submissions from members of the public is to make these submissions available for public viewing on the internet at *http://www.regulations.gov* as they are received without change, including any personal identifiers or contact information.

DOD Clearance Officer: Ms. Angela Duncan.

Requests for copies of the information collection proposal should be sent to Ms. Duncan at *whs.mc-alex.esd.mbx.dd-dod-information-collections@mail.mil.*

Dated: June 24, 2022.

Aaron T. Siegel,

Alternate OSD Federal Register Liaison Officer, Department of Defense.

[FR Doc. 2022–13981 Filed 6–29–22; 8:45 am]

BILLING CODE 5001–06–P

DEPARTMENT OF DEFENSE

Office of the Secretary

[Docket ID DoD–2022–OS–0044]

Submission for OMB Review; Comment Request

AGENCY: Office of the Under Secretary of Defense for Policy, Department of Defense (DoD).

ACTION: 30-Day information collection notice.

SUMMARY: The Department of Defense has submitted to OMB for clearance the following proposal for collection of information under the provisions of the Paperwork Reduction Act.

DATES: Consideration will be given to all comments received by August 1, 2022.

ADDRESSES: Written comments and recommendations for the proposed information collection should be sent within 30 days of publication of this notice to *www.reginfo.gov/public/do/PRAMain.* Find this particular information collection by selecting ''Currently under 30-day Review—Open for Public Comments'' or by using the search function.

FOR FURTHER INFORMATION CONTACT: Angela Duncan, 571–372–7574, *whs.mc-alex.esd.mbx.dd-dod-information-collections@mail.mil.*

SUPPLEMENTARY INFORMATION:

Title; Associated Form; and OMB Number: Security Assistance Network; OMB Control Number 0704–0555.

Type of Request: Extension.

Number of Respondents: 20,221.

Responses per Respondent: 1.

Annual Responses: 20,221.

Average Burden per Response: 30 minutes.

Annual Burden Hours: 10,110.5.

Needs and Uses: The information collection requirement is necessary to obtain information from International Military Students (IMS) who have been selected by their government to attend various trainings at DoD schools and DoD contracted facilities. The information collected is used to screen the IMS, determine his/her recreational activities, and ultimately prepare for the his/her arrival and stay in the U.S. Security Cooperation Officers collect this data from IMS over the phone and or in person. SCOs enter the information directly into the SAN network.

Affected Public: Individuals or households.

Frequency: On occasion.

Respondent's Obligation: Voluntary.

OMB Desk Officer: Ms. Jasmeet Seehra.

You may also submit comments and recommendations, identified by Docket ID number and title, by the following method:

• *Federal eRulemaking Portal: http://www.regulations.gov.* Follow the instructions for submitting comments.

Instructions: All submissions received must include the agency name, Docket ID number, and title for this **Federal Register** document. The general policy for comments and other submissions from members of the public is to make these submissions available for public viewing on the internet at *http://www.regulations.gov* as they are received without change, including any personal identifiers or contact information.

DOD Clearance Officer: Ms. Angela Duncan.

Requests for copies of the information collection proposal should be sent to Ms. Duncan at *whs.mc-alex.esd.mbx.dd-dod-information-collections@mail.mil.*

Dated: June 24, 2022.

Aaron T. Siegel,

Alternate OSD Federal Register Liaison Officer, Department of Defense.

[FR Doc. 2022–13973 Filed 6–29–22; 8:45 am]

BILLING CODE 5001–06–P

DEPARTMENT OF DEFENSE

Office of the Secretary

Committee Renewal of Department of Defense Federal Advisory Committees—Education for Seapower Advisory Board

AGENCY: Department of Defense (DoD).

ACTION: Renewal of Federal Advisory Committee.

SUMMARY: The DoD is publishing this notice to announce that it is renewing the Education for Seapower Advisory Board (E4SAB).

FOR FURTHER INFORMATION CONTACT: Jim Freeman, DoD Advisory Committee Management Officer, 703–692–5952.

SUPPLEMENTARY INFORMATION: The Department of Defense (DoD) is renewing the E4SAB in accordance with the Federal Advisory Committee Act (FACA) (5 U.S.C., appendix) and 41 CFR 102–3.50(d). The charter and contact information for the E4SAB's Designated Federal Officer (DFO) are found at *https://www.facadatabase.gov/FACA/apex/FACAPublicAgencyNavigation.*

The E4SAB provides the Secretary of Defense and the Deputy Secretary of Defense, through the Secretary of the Navy, with independent advice and recommendations on matters relating to the Naval University System, and specifically, the Naval Postgraduate School and the Naval War College. The E4SAB shall: (a) Provide advice on naval education strategy and implementation thereof, and (b) Provide advice on organizational management, curricula and methods of instruction, facilities, other issues of accreditation, and other matters of interest.

The E4SAB shall be composed of no more than 15 members appointed in accordance with DoD policies and procedures, who are imminent authorities in the fields of academia, business, national defense and security, the defense industry, and research and analysis. Not less than 50 percent of E4SAB members shall be eminent authorities in the field of academia. The Deputy Chief of Naval Operations for Manpower, Personnel, Training and Education, the Deputy Chief of Naval Operations for Warfighting Development, and the Commanding General, U.S Marine Corps Training and Education Command shall serve as ex-officio members of the Board, having voting rights and counting toward the E4SAB's total membership.

Individual members are appointed according to DoD policy and procedures, and serve a term of service of one-to-four years with annual renewals. One member will be appointed as Chair of the E4SAB. No member, unless approved according to DoD policy and procedures, may serve more than two consecutive terms of service on the E4SAB, or serve on more than two DoD Federal advisory committees at one time.

E4SAB members who are not full-time or permanent part-time Federal civilian officers or employees, or active duty members of the Uniformed Services, are appointed as experts or consultants, pursuant to 5 U.S.C. 3109, to serve as special government employee members. E4SAB members who are full-time or permanent part-time Federal civilian officers or employees, or active duty members of the Uniformed Services are appointed pursuant to 41 CFR 102–3.130(a), to serve as regular government employee members.

All E4SAB members are appointed to provide advice based on their best judgment without representing any particular point of view and in a manner that is free from conflict of interest. Except for reimbursement of official E4SAB-related travel and per diem, members serve without compensation.

The public or interested organizations may submit written statements about the E4SAB's mission and functions. Written statements may be submitted at any time or in response to the stated agenda of planned meeting of the E4SAB. All written statements shall be submitted to the DFO for the E4SAB, and this individual will ensure that the written statements are provided to the membership for their consideration.

Dated: June 24, 2022.

Aaron T. Siegel,

Alternate OSD Federal Register Liaison Officer, Department of Defense.

[FR Doc. 2022–13968 Filed 6–29–22; 8:45 am]

BILLING CODE 5001–06–P

DEPARTMENT OF DEFENSE

Office of the Secretary

[Docket ID DoD–2022–OS–0079]

Proposed Collection; Comment Request

AGENCY: Office of the Under Secretary of Defense for Personnel and Readiness (OUSD(P&R)), Department of Defense (DoD).

ACTION: 60-Day information collection notice.

SUMMARY: In compliance with the *Paperwork Reduction Act of 1995,* the Office of the Under Secretary of Defense for Personnel and Readiness announces a proposed public information collection and seeks public comment on the provisions thereof. Comments are invited on: whether the proposed collection of information is necessary for the proper performance of the functions of the agency, including whether the information shall have practical utility; the accuracy of the agency's estimate of the burden of the proposed information collection; ways to enhance the quality, utility, and clarity of the information to be collected; and ways to minimize the burden of the information collection on respondents, including through the use of automated collection techniques or other forms of information technology.

DATES: Consideration will be given to all comments received by August 29, 2022.

ADDRESSES: You may submit comments, identified by docket number and title, by any of the following methods:

Federal eRulemaking Portal: http://www.regulations.gov. Follow the instructions for submitting comments.

Mail: Department of Defense, Office of the Assistant to the Secretary of Defense for Privacy, Civil Liberties, and Transparency, Regulatory Directorate, 4800 Mark Center Drive, Attn: Mailbox 24, Suite 08D09, Alexandria, VA 22350–1700.

Instructions: All submissions received must include the agency name, docket number and title for this **Federal Register** document. The general policy for comments and other submissions from members of the public is to make these submissions available for public viewing on the internet at *http://www.regulations.gov* as they are received without change, including any personal identifiers or contact information.

FOR FURTHER INFORMATION CONTACT: To request more information on this proposed information collection or to obtain a copy of the proposal and associated collection instruments, please write to Defense Human Resources Activity, 4800 Mark Center Drive, Suite 08F05, Alexandria, VA 22350, LaTarsha Yeargins, 571–372–2089.

SUPPLEMENTARY INFORMATION:

Title; Associated Form; and OMB Number: Application for Correction of Military Record Under the Provisions of Title 10, U.S. Code, Section 1552; DD Form 149; OMB Control Number 0704–0003.

Needs and Uses: Under Title 10 United States Code 1552, Active Duty and Reserve Component Service members, Coast Guard, former Service members, their lawful or legal representatives, spouses of former

Service members on issues of Survivor Benefit Program (SBP) benefits, and civilian employees with respect to military records other than those related to civilian employment, who believe they have suffered an injustice as a result of error or injustice in military records (hereafter referred to as Respondent), may apply to their respective Boards for Correction of Military/Naval Records (BCM/NR) for a correction of their military record. These BCM/NR is the highest level of administrative review authority regarding official personnel records in the Military Departments. The information collected is needed to provide the BCM/NR the basic data to process and act on the Respondent's request.

The Respondent applies to the respective BCM/NR, which uses the DD Form 149, ''Application for Correction of Military Record under the Provisions of Title 10, U.S. Code, Section 1552,'' as the collection instrument. The form is formatted in both electronic and paper format with text or hand-written fillable entries. The information from the DD Form 149 is used by the respective BCM/NR in processing the respondent's request pursuant to 10 U.S.C. 1552. The DD Form 149 was developed to standardize application to the BCM/NR. This information is used to identify and secure the appropriate official military and medical records from the records storage facilities. Information on the form is also used to determine status, to allow respondents to designate counsel of choice, to identify the issues involved, and to determine if the request was filed within the three-year statute of limitations established by Congress (10 U.S.C. 1552).

The request is initiated by the Respondent; therefore, there is no preemptory request or invitation sent to the Respondent associated with the information collection. The information collected from the DD Form 149 is used by the respective BCM/NR to determine if an error or injustice has occurred in an individual's military record and, if applicable, the BCM/NR will promulgate a correction based on error, injustice, or clemency.

Affected Public: Individuals or households.

Annual Burden Hours: 20,759 hours.

Number of Respondents: 20,759.

Responses per Respondent: 1.

Annual Responses: 20,759.

Average Burden per Response: 1 hour.

Frequency: On occasion.

Dated: June 24, 2022.

Aaron T. Siegel,

Alternate OSD Federal Register Liaison Officer, Department of Defense.

[FR Doc. 2022–13972 Filed 6–29–22; 8:45 am]

BILLING CODE 5001–06–P

DEPARTMENT OF DEFENSE

Department of the Navy

[Docket ID USN–2022–HQ–0009]

Submission for OMB Review; Comment Request

AGENCY: Department of the Navy, Department of Defense (DoD).

ACTION: 30-Day information collection notice.

SUMMARY: The Department of Defense has submitted to OMB for clearance the following proposal for collection of information under the provisions of the Paperwork Reduction Act.

DATES: Consideration will be given to all comments received by August 1, 2022.

ADDRESSES: Written comments and recommendations for the proposed information collection should be sent within 30 days of publication of this notice to *www.reginfo.gov/public/do/PRAMain.* Find this particular information collection by selecting ''Currently under 30-day Review—Open for Public Comments'' or by using the search function.

FOR FURTHER INFORMATION CONTACT: Angela Duncan, 571–372–7574, *whs.mc-alex.esd.mbx.dd-dod-information-collections@mail.mil.*

SUPPLEMENTARY INFORMATION:

Title; Associated Form; and OMB Number: Personal Information Questionnaire; NAVMC Form 10064; OMB Control Number 0703–0012.

Type of Request: Revision.

Number of Respondents: 3,500.

Responses per Respondent: 1.

Annual Responses: 3,500.

Average Burden per Response: 15 minutes.

Annual Burden Hours: 875.

Needs and Uses: The information collected through NAVMC Form 10064, ''Personal Information Questionnaire,'' is needed to verify a potential officer candidate's moral character. Information pertaining to an applicant's moral character is of the utmost importance when applying for a program. As a commissioned officer in the United States Marine Corps, these men and women will be expected to lead others by example, upholding the Marine Corps Values of honor, courage, and commitment. The potential applicant provides five character references, via the NAVMC 10064 Personal Information Questionnaire (PIQ), to the Marine Corps Officer Selection Officer (OSO) during the Marine Corps Officer Candidate application. Applicants are advised that PIQs from employers, educators, and other professional individuals are preferred over PIQs from peers, close friends, and neighbors and must be used in lieu of PIQs from relatives. In order to provide an OSO with an accurate and impartial depiction of an applicant's character, the OSO will contact the references and provide the PIQ via email for completion. A sample copy of the accompanying email is included in the package as a supporting document. Once the reference has completed the form, they will sign it electronically and return it to the OSO via email. In limited cases, the respondent may request to hand deliver their response to the OSO or receive/return the PIQ via the U.S. Postal Services. A postage-free envelope is provided to the respondent if required. The OSO ensures the integrity of the PIQ process by not allowing applicants to directly handle PIQ forms.

Affected Public: Individuals or households.

Frequency: On occasion.

Respondent's Obligation: Voluntary.

OMB Desk Officer: Ms. Jasmeet Seehra.

You may also submit comments and recommendations, identified by Docket ID number and title, by the following method:

• *Federal eRulemaking Portal: http://www.regulations.gov.* Follow the instructions for submitting comments.

Instructions: All submissions received must include the agency name, Docket ID number, and title for this **Federal Register** document. The general policy for comments and other submissions from members of the public is to make these submissions available for public viewing on the internet at *http://www.regulations.gov* as they are received without change, including any personal identifiers or contact information.

DOD Clearance Officer: Ms. Angela Duncan.

Requests for copies of the information collection proposal should be sent to Ms. Duncan at *whs.mc-alex.esd.mbx.dd-dod-information-collections@mail.mil.*

Dated: June 24, 2022.

Aaron T. Siegel,

Alternate OSD Federal Register Liaison Officer, Department of Defense.

[FR Doc. 2022–13974 Filed 6–29–22; 8:45 am]

BILLING CODE 5001–06–P

DEPARTMENT OF DEFENSE

Department of the Navy

[Docket ID USN–2022–HQ–0008]

Submission for OMB Review; Comment Request

AGENCY: Department of the Navy, Department of Defense (DoD).

ACTION: 30-Day information collection notice.

SUMMARY: The Department of Defense has submitted to OMB for clearance the following proposal for collection of information under the provisions of the Paperwork Reduction Act.

DATES: Consideration will be given to all comments received by August 1, 2022.

ADDRESSES: Written comments and recommendations for the proposed information collection should be sent within 30 days of publication of this notice to *www.reginfo.gov/public/do/PRAMain.* Find this particular information collection by selecting ''Currently under 30-day Review—Open for Public Comments'' or by using the search function.

FOR FURTHER INFORMATION CONTACT: Angela Duncan, 571–372–7574, *whs.mc-alex.esd.mbx.dd-dod-information-collections@mail.mil.*

SUPPLEMENTARY INFORMATION:

Title; Associated Form; and OMB Number: Academic Certification for Marine Corps Officer Candidate Program; NAVMC Form 10469; OMB Control Number 0703–0011.

Type of Request: Revision.

Number of Respondents: 3,500.

Responses per Respondent: 1.

Annual Responses: 3,500.

Average Burden Per Response: 15 minutes.

Annual Burden Hours: 875.

Needs And Uses: The information collected through NAVMC Form 10469, ''Academic Certification for Marine Corps Officer Candidate Program,'' is needed to verify a potential officer candidate's academic qualifications and mental qualifying scores. When an applicant is interested in joining the Marine Corps as an Officer, they must contact a Marine Corps Officer Selection Officer (OSO). An OSO will then conduct an initial interview with the applicant in which they will be asked to disclose where he or she attended college. The OSO will go to the colleges or universities that the applicant listed during the initial interview. The OSO takes the NAVMC Form 10469 to the college or university of the applicant where the respondent, a school official, will fill out the form with information on the student's degree plan, major, credit hours, and grades. The school official will then sign the form, verifying the information to be true, and return it to the OSO in person. The data from the NAVMC 10469 is scanned and uploaded into the Marine Corps Recruiting Command's Automated Commissioning Package (ACP) database. The form is included in a potential officer's application. Once this form is scanned into the ACP, the hard copy of the form is destroyed. The ACP is then uploaded into the Marine Corps Recruiting Command Administrative Portal, where the forms are stored permanently.

Affected Public: Individuals or households.

Frequency: On occasion.

Respondent's Obligation: Voluntary.

OMB Desk Officer: Ms. Jasmeet Seehra.

You may also submit comments and recommendations, identified by Docket ID number and title, by the following method:

• *Federal eRulemaking Portal: http://www.regulations.gov.* Follow the instructions for submitting comments.

Instructions: All submissions received must include the agency name, Docket ID number, and title for this **Federal Register** document. The general policy for comments and other submissions from members of the public is to make these submissions available for public viewing on the internet at *http://www.regulations.gov* as they are received without change, including any personal identifiers or contact information.

DOD Clearance Officer: Ms. Angela Duncan.

Requests for copies of the information collection proposal should be sent to Ms. Duncan at *whs.mc-alex.esd.mbx.dd-dod-information-collections@mail.mil.*

Dated: June 24, 2022.

Aaron T. Siegel,

Alternate OSD Federal Register Liaison Officer, Department of Defense.

[FR Doc. 2022–13977 Filed 6–29–22; 8:45 am]

BILLING CODE 5001–06–P

DEPARTMENT OF EDUCATION

Applications for New Awards; Modeling and Simulation Program

AGENCY: Office of Postsecondary Education, Department of Education.

ACTION: Notice.

SUMMARY: The Department of Education is issuing a notice inviting applications for new awards for fiscal year (FY) 2022 for the Modeling and Simulation Program (MSP), Assistance Listing Number 84.116S. This notice relates to the approved information collection under OMB control number 1894–0006.

DATES:

Applications Available: June 30, 2022.

Deadline for Transmittal of Applications: August 15, 2022.

Deadline for Intergovernmental Review: October 13, 2022.

ADDRESSES: For the addresses for obtaining and submitting an application, please refer to our Common Instructions for Applicants to Department of Education Discretionary Grant Programs, published in the **Federal Register** on December 27, 2021 (86 FR 73264) and available at *www.federalregister.gov/d/2021-27979.* Please note that these Common Instructions supersede the version published on February 13, 2019, and, in part, describe the transition from the requirement to register in *SAM.gov* a Data Universal Numbering System (DUNS) number to the implementation of the Unique Entity Identifier (UEI). More information on the phase-out of DUNS numbers is available at *https://www2.ed.gov/about/offices/list/ofo/docs/unique-entity-identifier-transition-fact-sheet.pdf.*

FOR FURTHER INFORMATION CONTACT: Robin M. Dabney, U.S. Department of Education, 400 Maryland Avenue SW, Room 2B117, Washington, DC 20202–4260. Telephone: (202) 453–7908. Email: *Robin.Dabney@ed.gov.*

If you are deaf, hard of hearing, or have a speech disability and wish to access telecommunications relay services, please dial 7–1–1.

SUPPLEMENTARY INFORMATION:

Full Text of Announcement

I. Funding Opportunity Description

Purpose of Program: The MSP is designed to promote the study of modeling and simulation at institutions of higher education (IHEs) by promoting the enhancement or development of modeling and simulation degree and certificate programs. Additionally, through this program, the Department will create a task force that will include successful grantees and other content experts to raise awareness and help further define the study of modeling and simulation.

Background: Modeling and simulation programs utilize simulated interactive models of real world scenarios to improve experiential learning in the classroom. According to House Report 117–96, which accompanied the FY 2022 appropriations bill for the Departments of Labor, Health and Human Services, Education, and related agencies,

''modeling and simulation technology has numerous applications for Federal and State governments and their partners in the defense, education, gaming, shipbuilding, and workforce training sectors, allowing them to generate data to help make decisions or predictions about their systems.'' [1] These technologies aid in the development of tools or techniques in numerous industries where real world education and training for high-risk or dangerous situations are not realistic. This program seeks to fund the development or enhancement of certificate and degree programs focused on modeling and simulation. Through grant support, we hope to increase the availability and capacity of such certificate and degree programs in the field of modeling and simulation. In FY 2021, the Department provided funding to five IHEs to develop and enhance degree programs in this field. Given the additional funding for this program in FY 2022, the Department will fund additional applicants to expand opportunities for students who are interested in pursuing this type of degree program.

In addition, the MSP includes a task force to provide input into the development of curriculum and research on the instructional methods and pedagogy needed to further develop modeling and simulation programs. Applicants funded under this program will be members of the task force and should include funding requests in their budgets for activities associated with task force membership, in addition to the amount requested for program implementation. In accordance with section 891(b)(1) of the Higher Education Act of 1965, as amended (HEA), the activities of the task force will include helping to define the study of modeling and simulation (including the content of modeling and simulation classes and programs), identifying best practices for such study, identifying core knowledge and skills that individuals who participate in modeling and simulation programs should acquire, and providing recommendations to the Secretary on these topics and on grants distribution. The budget for participation in the task force should be included in the budget narrative and should include travel for at least two or three grantee representatives for two or three in-person meetings and/or site visits to organizations using modeling and simulation technologies to help expand awareness. Budgets should also include costs related to the development of white papers or other resources so that grantees can share the knowledge gained through their funded programs, as well as other lessons learned from the task force convenings.

Priorities: This notice contains two absolute priorities and one competitive preference priority. Applicants may only apply under one of the two absolute priorities. In accordance with 34 CFR 75.105(b)(2)(v), the absolute priorities are from the authorizing statute (section 891 of the HEA, 20 U.S.C. 1161v). The competitive preference priority is from the Secretary's Supplemental Priorities and Definitions for Discretionary Grants Programs, published in the **Federal Register** on December 10, 2021 (86 FR 70612) (Supplemental Priorities).

Absolute Priorities: These priorities are absolute priorities. Under 34 CFR 75.105(c)(3), we consider only applications that meet one of these priorities. Applicants must specify which absolute priority they are responding to in their application abstract.

These priorities are:

Absolute Priority 1—Enhancing Modeling and Simulation at Institutions of Higher Education.

To be considered for a grant under this absolute priority, an eligible institution must include in its application—

(a) A letter from the president or provost of the eligible institution that demonstrates the institution's commitment to the enhancement of the modeling and simulation program at the institution of higher education;

(b) An identification of designated faculty responsible for the enhancement of the institution's modeling and simulation program;

(c) A detailed plan for how the grant funds will be used to enhance a modeling and simulation program of the institution; and

(d) Evidence that the institution has an established modeling and simulation degree program, including a major, minor, or career-track program; or has an established modeling and simulation certificate or concentration program.

Absolute Priority 2—Establishing Modeling and Simulation Programs.

To be considered for a grant under this absolute priority, an eligible institution must include in its application—

(a) A letter from the president or provost of the eligible institution that demonstrates the institution's commitment to the establishment of a modeling and simulation program at the institution of higher education;

(b) A detailed plan for how the grant funds will be used to establish a modeling and simulation program at the institution; and

(c) A description of how the modeling and simulation program established under this priority will complement existing programs and fit into the institution's current program and course offerings.

Competitive Preference Priority: For FY 2022 and any subsequent year in which we make awards from the list of unfunded applications from this competition, this priority is a competitive preference priority. Under 34 CFR 75.105(c)(2)(i), we award up to an additional 3 points to an application, depending on how well the application meets this priority.

This priority is:

Competitive Preference Priority—Promoting Equity in Student Access to Educational Resources and Opportunities (up to 3 points).

Under this priority, an application must demonstrate that the project will be implemented by or in partnership with one or more of the following entities:

(a) Community colleges (as defined in this notice).

(b) Historically Black colleges and universities (as defined in this notice).

(c) Tribal Colleges and Universities (as defined in this notice).

(d) Minority-serving institutions (as defined in this notice).

Definitions: The definition of ''modeling and simulation'' is from section 891 of the HEA. The definitions of ''community college,'' ''Historically Black colleges and universities,'' ''Minority-serving institution,'' and ''Tribal College or University,'' are from the Supplemental Priorities. The remaining definitions are from 34 CFR 77.1.

Community college means ''junior or community college'' as defined in section 312(f) of the HEA.

Demonstrates a rationale means a key project component included in the project's logic model is informed by research or evaluation findings that suggest the project component is likely to improve relevant outcomes.

Historically Black colleges and universities means colleges and universities that meet the criteria set out in 34 CFR 608.2.

Logic model (also referred to as a theory of action) means a framework that identifies key project components of the proposed project (*i.e.,* the active ''ingredients'' that are hypothesized to be critical to achieving the relevant outcomes) and describes the theoretical and operational relationships among the

[1] H. Rept. 117–96 at p. 303 (2022).

key project components and relevant outcomes.

Note: In developing logic models, applicants may want to use resources such as the Regional Educational Laboratory Program's (REL Pacific) Education Logic Model Application, available at *https://ies.ed.gov/ncee/edlabs/regions/pacific/elm.asp.* Other sources include: *https://ies.ed.gov/ncee/edlabs/regions/pacific/pdf/REL_2014025.pdf, https://ies.ed.gov/ncee/edlabs/regions/pacific/pdf/REL_2014007.pdf,* and *https://ies.ed.gov/ncee/edlabs/regions/northeast/pdf/REL_2015057.pdf.*

Minority-serving institution means an institution that is eligible to receive assistance under sections 316 through 320 of part A of title III, under part B of title III, or under title V of the HEA.

Modeling and simulation means a field of study related to the application of computer science and mathematics to develop a level of understanding of the interaction of the parts of a system and of a system as a whole.

Project component means an activity, strategy, intervention, process, product, practice, or policy included in a project. Evidence may pertain to an individual project component or to a combination of project components (*e.g.,* training teachers on instructional practices for English learners and follow-on coaching for these teachers).

Relevant outcome means the student outcome(s) or other outcome(s) the key project component is designed to improve, consistent with the specific goals of the program.

Tribal College or University has the meaning ascribed it in section 316(b)(3) of the HEA.

Program Authority: 20 U.S.C. 1161v; 20 U.S.C. 1138–1138d; and the Consolidated Appropriations Act, 2022 (Pub. L. 117–103).

Note: Projects will be awarded and must be operated in a manner consistent with the nondiscrimination requirements contained in Federal civil rights laws.

Applicable Regulations: (a) The Education Department General Administrative Regulations in 34 CFR parts 75, 77, 79, 82, 84, 86, 97, 98, and 99. (b) The Office of Management and Budget Guidelines to Agencies on Governmentwide Debarment and Suspension (Nonprocurement) in 2 CFR part 180, as adopted and amended as regulations of the Department in 2 CFR part 3485. (c) The Uniform Administrative Requirements, Cost Principles, and Audit Requirements for Federal Awards in 2 CFR part 200, as adopted and amended as regulations of the Department in 2 CFR part 3474. (d) The Supplemental Priorities.

II. Award Information

Type of Award: Discretionary grant.

Estimated Available Funds: $7,920,000. Approximately 50 percent of available funds will be used to fund awards under Absolute Priority 1, and approximately 50 percent of available funds will be used to fund awards under Absolute Priority 2.

Contingent upon the availability of funds and the quality of applications, we may make additional awards in subsequent years from the list of unfunded applications from this competition.

Estimated Range of Awards: $750,000 to $1,155,000.

Estimated Average Size of Awards: $866,250.

Maximum Award: We will not make an award exceeding $1,155,000 for the entire project period of 36 months.

Note: Applicants should set aside sufficient funds to carry out activities related to task force participation. A listing of line-item costs associated with task force activities must include travel for at least two or three grantee representatives for two or three annual meetings to be held in Washington, DC, and/or site visits to organizations using modeling and simulation technologies to help expand awareness, and costs associated with a white paper outlining lessons learned from the enhanced or established modeling and simulation program.

Estimated Number of Awards: 6–9.

Note: The Department is not bound by any estimates in this notice.

Project Period: Up to 36 months.

III. Eligibility Information

1. *Eligible Applicants:* A public or private nonprofit institution of higher education, as defined in section 101(a) of the HEA.

2. a. *Cost Sharing or Matching:* In accordance with the requirements in section 891(c)(1)(D) and (d)(1)(D) of the HEA, each eligible institution receiving a grant under this program must provide, from non-Federal sources, in cash or in-kind, an amount equal to 25 percent of the amount of the grant to carry out the activities supported by the grant.

b. *Indirect Cost Rate Information:* This program uses an unrestricted indirect cost rate. For more information regarding indirect costs, or to obtain a negotiated indirect cost rate, please see *www2.ed.gov/about/offices/list/ocfo/intro.html.*

c. *Administrative Cost Limitation:* This program does not include any program-specific limitation on administrative expenses. All administrative expenses must be reasonable and necessary and conform to Cost Principles described in 2 CFR part 200 subpart E of the Uniform Guidance.

3. *Subgrantees:* A grantee under this competition may not award subgrants to entities to directly carry out project activities described in its application.

IV. Application and Submission Information

1. *Application Submission Instructions:* Applicants are required to follow the Common Instructions for Applicants to Department of Education Discretionary Grant Programs, published in the **Federal Register** on December 27, 2021 (86 FR 73264) and available at *www.federalregister.gov/d/2021-27979,* which contain requirements and information on how to submit an application. Please note that these Common Instructions supersede the version published on February 13, 2019, and, in part, describe the transition from the requirement to register in *SAM.gov* a DUNS number to the implementation of the UEI. More information on the phase-out of DUNS numbers is available at *https://www2.ed.gov/about/offices/list/ofo/docs/unique-entity-identifier-transition-fact-sheet.pdf.*

2. *Submission of Proprietary Information:* Given the types of projects that may be proposed in applications for the Modeling and Simulation Program, your application may include business information that you consider proprietary. In 34 CFR 5.11 we define ''business information'' and describe the process we use in determining whether any of that information is proprietary and, thus, protected from disclosure under Exemption 4 of the Freedom of Information Act (5 U.S.C. 552, as amended). Because we plan to make successful applications available to the public, you may wish to request confidentiality of business information.

Consistent with Executive Order 12600, please designate in your application any information you believe is exempt from disclosure under Exemption 4. In the appropriate Appendix section of your application under ''Other Attachments Form,'' please list the page number or numbers on which we can find this information. For additional information please see 34 CFR 5.11(c).

3. *Intergovernmental Review:* This competition is subject to Executive Order 12372 and the regulations in 34 CFR part 79. Information about Intergovernmental Review of Federal

Programs under Executive Order 12372 is in the application package for this competition.

4. *Funding Restrictions:* In accordance with section 891(d)(3) of the HEA, a grant awarded under Absolute Priority 1, Enhancing Modeling and Simulation at IHEs, must be used by an eligible institution to enhance modeling and simulation programs at the institution, which may include—

(a) Expanding the multidisciplinary nature of the institution's modeling and simulation programs;

(b) Recruiting students into the field of modeling and simulation through the provision of fellowships or assistantships;

(c) Creating new courses to complement existing courses and reflect emerging developments in the modeling and simulation field;

(d) Conducting research to support new methodologies and techniques in modeling and simulation; and

(e) Purchasing equipment necessary for modeling and simulation programs.

In accordance with section 891(d)(3) of the HEA, a grant awarded under Absolute Priority 2, Establishing Modeling and Simulation at IHEs, must be used by an eligible institution to establish modeling and simulation programs at the institution, which may include—

(a) Establishing, or working toward the establishment of, a modeling and simulation program, including a major, minor, career-track, certificate, or concentration program at the eligible institution;

(b) Providing adequate staffing to ensure the successful establishment of the modeling and simulation program, which may include the assignment of full-time dedicated or supportive faculty; and

(c) Purchasing equipment necessary for modeling and simulation programs.

We reference additional regulations outlining funding restrictions in the *Applicable Regulations* section of this notice.

5. *Recommended Page Limit:* The application narrative is where you, the applicant, address the selection criteria that reviewers use to evaluate your application. We recommend that you (1) limit the application narrative to no more than 50 pages and (2) use the following standards:

- A ''page'' is 8.5″ × 11″, on one side only, with 1″ margins at the top, bottom, and both sides.
- Double-space (no more than three lines per vertical inch) all text in the application narrative, including titles, headings, footnotes, quotations, references, and captions, as well as all text in charts, tables, figures, and graphs.
- Use a font that is either 12 point or larger, and no smaller than 10 pitch (characters per inch).
- Use one of the following fonts: Times New Roman, Courier, Courier New, or Arial.

The recommended page limit applies to the application narrative, which is your complete response to the selection criteria and any response to the competitive preference priority. However, the recommended page limit does not apply to the cover sheet; the budget section, including the narrative budget justification; the assurances and certifications; or the one-page abstract, the resumes, the bibliography, or the letters of support.

V. Application Review Information

1. *Selection Criteria:* The selection criteria for this competition are from 34 CFR 75.210. The points assigned to each criterion are indicated in parentheses next to the criterion. An application may earn up to a total of 100 points based on the selection criteria. Applications may receive up to 3 additional points under the competitive preference priority, for a total score of up to 103 points. All applications will be evaluated based on the selection criteria as follows:

(a) *Significance.* (Maximum 25 points)

(1) The Secretary considers the significance of the proposed project.

(2) In determining the significance of the proposed project, the Secretary considers the following factors:

(i) The extent to which the proposed project is likely to yield findings that may be utilized by other appropriate agencies and organizations. (up to 5 points)

(ii) The extent to which the proposed project involves the development or demonstration of promising new strategies that build on, or are alternatives to, existing strategies. (up to 10 points)

(iii) The extent to which the results of the proposed project are to be disseminated in ways that will enable others to use the information or strategies. (up to 10 points)

(b) *Quality of the project design.* (Maximum 50 points)

(1) The Secretary considers the quality of the design of the proposed project.

(2) In determining the quality of the design of the proposed project, the Secretary considers the following factors:

(i) The extent to which there is a conceptual framework underlying the proposed research or demonstration activities and the quality of that framework. (up to 10 points)

(ii) The extent to which the proposed activities constitute a coherent, sustained program of training in the field. (up to 10 points)

(iii) The extent to which the proposed project is designed to build capacity and yield results that will extend beyond the period of Federal financial assistance. (up to 10 points)

(iv) The extent to which the proposed project represents an exceptional approach to the priorities established for the competition. (up to 10 points)

(v) The extent to which the proposed project demonstrates a rationale (as defined in this notice). (up to 10 points)

(c) *Quality of project personnel.* (Maximum 5 points)

(1) The Secretary considers the quality of the personnel who will carry out the proposed project.

(2) In determining the quality of project personnel, the Secretary considers the extent to which the applicant encourages applications for employment from persons who are members of groups that have traditionally been underrepresented based on race, color, national origin, gender, age, or disability. (up to 2 points)

(3) In addition, the Secretary considers the qualifications, including relevant training and experience, of the project director or principal investigator. (up to 3 points)

(d) *Adequacy of resources.* (Maximum 5 points)

(1) The Secretary considers the adequacy of the resources for the proposed project.

(2) In determining the adequacy of resources for the proposed project, the Secretary considers the adequacy of support, including facilities, equipment, supplies, and other resources, from the applicant organization or the lead applicant organization.

(e) *Quality of the management plan.* (Maximum 5 points)

(1) The Secretary considers the quality of the management plan for the proposed project.

(2) In determining the quality of the management plan for the proposed project, the Secretary considers the extent to which the time commitments of the project director and principal investigator and other key project personnel are appropriate and adequate to meet the objectives of the proposed project.

(f) *Quality of the project evaluation.* (Maximum 10 points)

(1) The Secretary considers the quality of the evaluation to be conducted of the proposed project.

(2) In determining the quality of the evaluation, the Secretary considers the following factors:

(i) The extent to which the methods of evaluation are thorough, feasible, and appropriate to the goals, objectives, and outcomes of the proposed project. (up to 5 points)

(ii) The extent to which the methods of evaluation will provide performance feedback and permit periodic assessment of progress toward achieving intended outcomes. (up to 5 points)

2. *Review and Selection Process:* We remind potential applicants that in reviewing applications in any discretionary grant competition, the Secretary may consider, under 34 CFR 75.217(d)(3), the past performance of the applicant in carrying out a previous award, such as the applicant's use of funds, achievement of project objectives, and compliance with grant conditions. The Secretary may also consider whether the applicant failed to submit a timely performance report or submitted a report of unacceptable quality.

In addition, in making a competitive grant award, the Secretary requires various assurances, including those applicable to Federal civil rights laws that prohibit discrimination in programs or activities receiving Federal financial assistance from the Department (34 CFR 100.4, 104.5, 106.4, 108.8, and 110.23).

For this competition, a panel of external reviewers will read, prepare a written evaluation of, and score all eligible applications using the selection criteria and the competitive preference priority, if applicable, provided in this notice. The individual scores of the reviewers will be added and the sum divided by the number of reviewers to determine the peer review score. The Department may use more than one tier of reviews in evaluating grantees. The Department will prepare a rank order of applications based solely on the evaluation of their quality according to the selection criteria and competitive preference priority points.

In the event there are two or more applications with the same final score in the rank order listing, and there are insufficient funds to fully support each of these applications, the Department will apply the following procedure to determine which application or applications will receive an award:

First Tiebreaker: The first tiebreaker will be the highest average score for the selection criterion ''Quality of the Project Design.'' If a tie remains, the second tiebreaker will be utilized.

Second Tiebreaker: The second tiebreaker will be the highest average score for the selection criterion ''Significance.'' If a tie remains, the third tiebreaker will be utilized.

Third Tiebreaker: The third tiebreaker will be the highest average score for the selection criterion ''Project Evaluation.'' If a tie remains, the fourth tiebreaker will be utilized.

Fourth Tiebreaker: The fourth tiebreaker will be the highest average score for the competitive preference priority.

Fifth Tiebreaker: The fifth tiebreaker will be the application that proposes to provide the highest non-Federal share percentage, or the highest total dollar match if non-Federal share percentages are determined to be equal.

3. *Risk Assessment and Specific Conditions:* Consistent with 2 CFR 200.206, before awarding grants under this competition, the Department conducts a review of the risks posed by applicants. Under 2 CFR 200.208, the Secretary may impose specific conditions and, under 2 CFR 3474.10, in appropriate circumstances, high-risk conditions on a grant if the applicant or grantee is not financially stable; has a history of unsatisfactory performance; has a financial or other management system that does not meet the standards in 2 CFR part 200, subpart D; has not fulfilled the conditions of a prior grant; or is otherwise not responsible.

4. *Integrity and Performance System:* If you are selected under this competition to receive an award that over the course of the project period may exceed the simplified acquisition threshold (currently $250,000), under 2 CFR 200.206(a)(2) we must make a judgement about your integrity, business ethics, and record of performance under Federal awards—that is, the risk posed by you as an applicant—before we make an award. In doing so, we must consider any information about you that is in the integrity and performance system (currently referred to as the Federal Awardee Performance and Integrity Information System (FAPIIS)), accessible through the System for Award Management. You may review and comment on any information about yourself that a Federal agency previously entered and that is currently in FAPIIS.

Please note that, if the total value of your currently active grants, cooperative agreements, and procurement contracts from the Federal Government exceeds $10,000,000, the reporting requirements in 2 CFR part 200, Appendix XII, require you to report certain integrity information to FAPIIS semiannually. Please review the requirements in 2 CFR part 200, Appendix XII, if this grant plus all the other Federal funds you receive exceed $10,000,000.

5. *In General:* In accordance with the Office of Management and Budget's guidance located at 2 CFR part 200, all applicable Federal laws, and relevant Executive guidance, the Department will review and consider applications for funding pursuant to this notice inviting applications in accordance with:

(a) Selecting recipients most likely to be successful in delivering results based on the program objectives through an objective process of evaluating Federal award applications (2 CFR 200.205;

(b) Prohibiting the purchase of certain telecommunication and video surveillance services or equipment in alignment with section 889 of the National Defense Authorization Act of 2019 (Pub. L. 115–232) (2 CFR 200.216);

(c) Providing a preference, to the extent permitted by law, to maximize use of goods, products, and materials produced in the United States (2 CFR 200.322); and

(d) Terminating agreements in whole or in part to the greatest extent authorized by law if an award no longer effectuates the program goals or agency priorities (2 CFR 200.340).

VI. Award Administration Information

1. *Award Notices:* If your application is successful, we notify your U.S. Representative and U.S. Senators and send you a Grant Award Notification (GAN); or we may send you an email containing a link to access an electronic version of your GAN. We may notify you informally, also.

If your application is not evaluated or not selected for funding, we notify you.

2. *Administrative and National Policy Requirements:* We identify administrative and national policy requirements in the application package and reference these and other requirements in the *Applicable Regulations* section of this notice.

We reference the regulations outlining the terms and conditions of an award in the *Applicable Regulations* section of this notice and include these and other specific conditions in the GAN. The GAN also incorporates your approved application as part of your binding commitments under the grant.

3. *Open Licensing Requirements:* Unless an exception applies, if you are awarded a grant under this competition, you will be required to openly license to the public grant deliverables created in whole, or in part, with Department grant funds. When the deliverable consists of modifications to pre-existing works, the license extends only to those modifications that can be separately

identified and only to the extent that open licensing is permitted under the terms of any licenses or other legal restrictions on the use of pre-existing works. Additionally, a grantee or subgrantee that is awarded competitive grant funds must have a plan to disseminate these public grant deliverables. This dissemination plan can be developed and submitted after your application has been reviewed and selected for funding. For additional information on the open licensing requirements please refer to 2 CFR 3474.20.

4. *Reporting:* (a) If you apply for a grant under this competition, you must ensure that you have in place the necessary processes and systems to comply with the reporting requirements in 2 CFR part 170 should you receive funding under the competition. This does not apply if you have an exception under 2 CFR 170.110(b).

(b) At the end of your project period, you must submit a final performance report, including financial information, as directed by the Secretary. If you receive a multiyear award, you must submit an annual performance report that provides the most current performance and financial expenditure information as directed by the Secretary under 34 CFR 75.118. The Secretary may also require more frequent performance reports under 34 CFR 75.720(c). For specific requirements on reporting, please go to *www.ed.gov/fund/grant/apply/appforms/appforms.html.*

5. *Performance Measures:* For purposes of Department reporting under CFR 75.110, the Department will use the following performance measures to evaluate the success of the MSP:

(a) The number of students enrolled in the established and enhanced modeling and simulation programs, including major, minor, career-track, certificate, and concentration programs.

(b) The number of new modeling and simulation courses in established and enhanced programs developed under the MSP that reflect emerging developments in the modeling and simulation field.

6. *Continuation Awards:* In making a continuation award under 34 CFR 75.253, the Secretary considers, among other things: whether a grantee has made substantial progress in achieving the goals and objectives of the project; whether the grantee has expended funds in a manner that is consistent with its approved application and budget; and, if the Secretary has established performance measurement requirements, whether the grantee has made substantial progress in achieving the performance targets in the grantee's approved application.

In making a continuation award, the Secretary also considers whether the grantee is operating in compliance with the assurances in its approved application, including those applicable to Federal civil rights laws that prohibit discrimination in programs or activities receiving Federal financial assistance from the Department (34 CFR 100.4, 104.5, 106.4, 108.8, and 110.23).

VII. Other Information

Accessible Format: On request to the program contact person listed under **FOR FURTHER INFORMATION CONTACT**, individuals with disabilities can obtain this document and a copy of the application package in an accessible format. The Department will provide the requestor with an accessible format that may include Rich Text Format (RTF) or text format (txt), a thumb drive, an MP3 file, braille, large print, audiotape, or compact disc, or other accessible format.

Electronic Access to This Document: The official version of this document is the document published in the **Federal Register**. You may access the official edition of the **Federal Register** and the Code of Federal Regulations at *www.govinfo.gov.* At this site you can view this document, as well as all other documents of this Department published in the **Federal Register**, in text or Portable Document Format (PDF). To use PDF you must have Adobe Acrobat Reader, which is available free at the site.

You may also access documents of the Department published in the **Federal Register** by using the article search feature at *www.federalregister.gov.* Specifically, through the advanced search feature at this site, you can limit your search to documents published by the Department.

Michelle Asha Cooper,

Acting Assistant Secretary for Postsecondary Education.

[FR Doc. 2022–13987 Filed 6–29–22; 8:45 am]

BILLING CODE 4000–01–P

DEPARTMENT OF EDUCATION

[Docket No.: ED–2022–SCC–0087]

Agency Information Collection Activities; Comment Request; FFEL/Direct Loan/Perkins Military Service Deferment/Post-Active Duty Student Deferment Request

AGENCY: Federal Student Aid (FSA), Department of Education (ED).

ACTION: Notice.

SUMMARY: In accordance with the Paperwork Reduction Act of 1995, ED is proposing an extension without change of a currently approved collection.

DATES: Interested persons are invited to submit comments on or before August 29, 2022.

ADDRESSES: To access and review all the documents related to the information collection listed in this notice, please use *http://www.regulations.gov* by searching the Docket ID number ED–2022–SCC–0087. Comments submitted in response to this notice should be submitted electronically through the Federal eRulemaking Portal at *http://www.regulations.gov* by selecting the Docket ID number or via postal mail, commercial delivery, or hand delivery. If the *regulations.gov* site is not available to the public for any reason, ED will temporarily accept comments at *ICDocketMgr@ed.gov.* Please include the docket ID number and the title of the information collection request when requesting documents or submitting comments. *Please note that comments submitted by fax or email and those submitted after the comment period will not be accepted.* Written requests for information or comments submitted by postal mail or delivery should be addressed to the PRA Coordinator of the Strategic Collections and Clearance Governance and Strategy Division, U.S. Department of Education, 400 Maryland Ave. SW, LBJ, Room 6W208D, Washington, DC 20202–8240.

FOR FURTHER INFORMATION CONTACT: For specific questions related to collection activities, please contact Beth Grebeldinger, 202–377–4018.

SUPPLEMENTARY INFORMATION: The Department of Education (ED), in accordance with the Paperwork Reduction Act of 1995 (PRA) (44 U.S.C. 3506(c)(2)(A)), provides the general public and Federal agencies with an opportunity to comment on proposed, revised, and continuing collections of information. This helps the Department assess the impact of its information collection requirements and minimize the public's reporting burden. It also helps the public understand the Department's information collection requirements and provide the requested data in the desired format. ED is soliciting comments on the proposed information collection request (ICR) that is described below. The Department of Education is especially interested in public comment addressing the following issues: (1) is this collection necessary to the proper functions of the Department; (2) will this information be processed and used in a timely manner; (3) is the estimate of burden accurate;

(4) how might the Department enhance the quality, utility, and clarity of the information to be collected; and (5) how might the Department minimize the burden of this collection on the respondents, including through the use of information technology. Please note that written comments received in response to this notice will be considered public records.

Title of Collection: FFEL/Direct Loan/Perkins Military Service Deferment/Post-Active Duty Student Deferment Request.

OMB Control Number: 1845–0080.

Type of Review: An extension without change of a currently approved collection.

Respondents/Affected Public: Individuals and Households.

Total Estimated Number of Annual Responses: 16,000.

Total Estimated Number of Annual Burden Hours: 8,000.

Abstract: The Military Service/Post-Active Duty Student Deferment request form serves as the means by which a Federal Family Education Loan (FFEL), Perkins, or Direct Loan borrower requests a military service deferment and/or post-active duty student deferment and provides his or her loan holder with the information needed to determine whether the borrower meets the applicable deferment eligibility requirements. The form also serves as the means by which the U.S. Department of Education identifies Direct Loan borrowers who qualify for the Direct Loan Program's no accrual of interest benefit for active duty service members.

Dated: June 27, 2022.

Kun Mullan,

PRA Coordinator, Strategic Collections and Clearance, Governance and Strategy Division, Office of Chief Data Officer, Office of Planning, Evaluation and Policy Development.

[FR Doc. 2022–14015 Filed 6–29–22; 8:45 am]

BILLING CODE 4000–01–P

DEPARTMENT OF EDUCATION

[Docket No.: ED–2022–SCC–0091]

Agency Information Collection Activities; Comment Request; Talent Search (TS) Annual Performance Report

AGENCY: Office of Postsecondary Education (OPE), Department of Education (ED).

ACTION: Notice.

SUMMARY: In accordance with the Paperwork Reduction Act of 1995, ED is proposing a revision of a currently approved collection.

DATES: Interested persons are invited to submit comments on or before August 29, 2022.

ADDRESSES: To access and review all the documents related to the information collection listed in this notice, please use *https://www.regulations.gov* by searching the Docket ID number ED–2022–SCC–0091. Comments submitted in response to this notice should be submitted electronically through the Federal eRulemaking Portal at *https://www.regulations.gov* by selecting the Docket ID number or via postal mail, commercial delivery, or hand delivery. If the *regulations.gov* site is not available to the public for any reason, ED will temporarily accept comments at *ICDocketMgr@ed.gov.* Please include the docket ID number and the title of the information collection request when requesting documents or submitting comments. *Please note that comments submitted by fax or email and those submitted after the comment period will not be accepted.* Written requests for information or comments submitted by postal mail or delivery should be addressed to the PRA Coordinator of the Strategic Collections and Clearance Governance and Strategy Division, U.S. Department of Education, 400 Maryland Ave. SW, LBJ, Room 6W208D, Washington, DC 20202–8240.

FOR FURTHER INFORMATION CONTACT: For specific questions related to collection activities, please contact Ginger Allen, (202) 987–1973.

SUPPLEMENTARY INFORMATION: The Department of Education (ED), in accordance with the Paperwork Reduction Act of 1995 (PRA) (44 U.S.C. 3506(c)(2)(A)), provides the general public and Federal agencies with an opportunity to comment on proposed, revised, and continuing collections of information. This helps the Department assess the impact of its information collection requirements and minimize the public's reporting burden. It also helps the public understand the Department's information collection requirements and provide the requested data in the desired format. ED is soliciting comments on the proposed information collection request (ICR) that is described below. The Department of Education is especially interested in public comment addressing the following issues: (1) is this collection necessary to the proper functions of the Department; (2) will this information be processed and used in a timely manner; (3) is the estimate of burden accurate; (4) how might the Department enhance the quality, utility, and clarity of the information to be collected; and (5) how might the Department minimize the burden of this collection on the respondents, including through the use of information technology. Please note that written comments received in response to this notice will be considered public records.

Title of Collection: Talent Search (TS) Annual Performance Report.

OMB Control Number: 1840–0826.

Type of Review: Revision of a currently approved collection.

Respondents/Affected Public: State, Local, and Tribal Governments; Private Sector.

Total Estimated Number of Annual Responses: 530.

Total Estimated Number of Annual Burden Hours: 9,540.

Abstract: Talent Search grantees must submit the report annually. The report provides the Department of Education with information needed to evaluate a grantee's performance and compliance with program requirements and to award prior experience points in accordance with the program regulations. The data collection is also aggregated to provide national information on project participants and program outcomes.

The requested revisions include updating the numbers of respondents and burden hours to reflect the current number of grantees and revising the form to collect information about activities related to the Competitive Preference Priorities that were used in the most recent competition.

Dated: June 27, 2022.

Kun Mullan,

PRA Coordinator, Strategic Collections and Clearance, Governance and Strategy Division, Office of Chief Data Officer, Office of Planning, Evaluation and Policy Development.

[FR Doc. 2022–14052 Filed 6–29–22; 8:45 am]

BILLING CODE 4000–01–P

ELECTION ASSISTANCE COMMISSION

Agency Information Collection Activities: Budget Expense Worksheet

AGENCY: Election Assistance Commission (EAC).

ACTION: Notice; request for comment.

SUMMARY: As part of its continuing effort to reduce paperwork burdens, and as required by the Paperwork Reduction Act of 1995 (PRA), the U.S. Election Assistance Commission (EAC) gives notice that it is requesting from the Office of Management and Budget (OMB) approval for the information

collection EAC Budget Expenditures Worksheet (EAC–BEW).

DATES: Comments must be received by 5 p.m. Eastern on Friday, July 29, 2022.

ADDRESSES: To view the proposed EAC–BEW format, see: *https://www.eac.gov/payments-and-grants/reporting*.

For information on the EAC–BEW, contact Kinza Ghaznavi, Office of Grants, Election Assistance Commission, *Grants@eac.gov*.

Written comments and recommendations for the proposed information collection should be sent directly to *Grants@eac.gov*.

All requests and submissions should be identified by the title of the information collection.

SUPPLEMENTARY INFORMATION:

Title and OMB Number

Budget Expense Worksheet; 87 FR 24546 (Page 24546–24547, Document Number 2022–08781)

Purpose

This proposed information collection was previously published in the **Federal Register** on Thursday, April 28, 2022 and allowed 60 days for public comment. In compliance with Section 3507(a)(1)(D) of the Paperwork Reduction Act (PRA) of 1995, EAC has submitted to the Office of Management and Budget (OMB) a request for review and approval of the information collection listed below. The purpose of this notice is to allow an additional 30 days for public comment from all interested individuals and organizations.

The EAC Office of Grants Management (EAC/OGM) is responsible for distributing, monitoring, and providing technical assistance to states and grantees on the use of federal funds. EAC/OGM also reports on how the funds are spent to Congress, negotiates indirect cost rates with grantees, and resolves audit findings on the use of HAVA funds.

Public Comments

We are soliciting public comments to permit the EAC to:

- Evaluate whether the proposed information collection is necessary for the proper functions of the Office of Grants Management.
- Evaluate the accuracy of our estimate of burden for this proposed collection, including the validity of the methodology and assumptions used.
- Enhance the quality, utility, and clarity of the information to be collected.
- Minimize the reporting burden on those who are to respond, including the use of automated collection techniques or other forms of information technology.

Please note that comments submitted in response to this Notice are public record. Before including any detailed personal information, you should be aware that your comments as submitted, including your personal information, will be available for public review.

Respondents: All EAC grantees and state governments.

Annual Reporting Burden

ANNUAL BURDEN ESTIMATES

EAC Grant	Instrument	Total number of respondents	Total number of responses per year	Average burden hours per response	Annual burden hours
TBD	EAC–BEW	56	1	.5	28
Total		56	1	.5	28

The estimated cost of the annualized cost of this burden is: $658, which is calculated by taking the annualized burden (28 hours) and multiplying by an hourly rate of $23.50 (GS–8/Step 5 hourly basic rate).

Amanda Joiner,

Acting General Counsel, U.S. Election Assistance Commission.

[FR Doc. 2022–13945 Filed 6–29–22; 8:45 am]

BILLING CODE P

DEPARTMENT OF ENERGY

Innovative Technologies Loan Guarantee Program; Extension of Comment Period

AGENCY: Loan Programs Office, Department of Energy.

ACTION: Request for information; extension of public comment period.

SUMMARY: The Loan Programs Office (''LPO'') of the Department of Energy (''DOE'') is seeking information to understand how it could improve its Title XVII Innovative Technologies Loan Guarantee Program (the ''Title XVII Loan Guarantee Program'') and implement provisions of the Energy Act of 2020 and the Infrastructure Investment and Jobs Act (the ''IIJA'') that expand or modify the authorities applicable to the Title XVII Loan Guarantee Program. On June 1, 2022, DOE published a request for information (''RFI'') on these subjects. The RFI provided an opportunity for submitting written comments, data, and information no later than July 1, 2022. DOE received separate requests from Holland & Knight LLP; Piedmont Lithium, Inc.; Mitsubishi Power Americas, Inc.; and American Clean Power Association for an extension of the public comment period for an additional 30 days. DOE has reviewed these requests and is granting an extension of the public comment period to allow comments to be submitted no later than August 1, 2022.

DATES: The comment period for the RFI published on June 1, 2022 (87 FR 33141) is extended. DOE will accept comments, data, and information regarding the RFI received no later than August 1, 2022.

ADDRESSES: Interested persons are encouraged to submit comments, identified by ''Title XVII Loan Guarantee Program RFI,'' by any of the following methods:

Email: LPO.ProposedRuleComments@hq.doe.gov. Include ''Title XVII Loan Guarantee Program RFI'' in the subject line of the message. Email attachments can be provided in PDF (preferred), Microsoft Word or Excel, WordPerfect, or text (ASCII) file format, prepared in accordance with the detailed instructions in section III of the June 1, 2022 RFI, which can be found at: *https://www.federalregister.gov/d/2022-11734.*

Postal Mail: Loan Programs Office, Attn: LPO Legal Department, U.S. Department of Energy, 1000 Independence Avenue SW, Washington, DC 20585–0121. Please submit one signed original paper copy. Due to potential delays in DOE's receipt and processing of mail sent through the U.S. Postal Service, we encourage respondents to submit comments electronically to ensure timely receipt.

FOR FURTHER INFORMATION CONTACT: Steven Westhoff, Attorney-Adviser, Loan Programs Office, email: *LPO.ProposedRuleComments@hq.doe.gov,* or phone: (240) 220–4994.

SUPPLEMENTARY INFORMATION: On June 1, 2022, DOE published an RFI initiating a review to consider whether to amend DOE's Title XVII Rule at 10 CFR part 609. 87 FR 33141. In the RFI, DOE identified certain programmatic and procedural issues on which it is interested in receiving comment. These issues include the scope and application of statutory amendments under the Energy Act of 2020 and the IIJA, facilitation of new or different projects and financing structures, and other potential improvements to the Title XVII Loan Guarantee Program. The RFI set a comment period deadline of July 1, 2022.

Several interested parties requested a 30-day extension of the public comment period to help investigate the request and respond appropriately with considered comments. For example, these parties referred to the diversity of topics covered in the RFI and the potential impacts that the RFI process will have on DOE's implementation of the Title XVII Loan Guarantee Program. DOE anticipates that extending the public comment period will enable additional stakeholders to submit valuable comments in response to the RFI.

DOE has determined that an extension of the public comment period is appropriate to allow interested parties additional time to submit comments for DOE's consideration. Thus, DOE is extending the comment period through August 1, 2022.

Signing Authority

This document of the Department of Energy was signed on June 24, 2022, by Dong Kim, Deputy Director, Loan Programs Office, pursuant to delegated authority from the Secretary of Energy. That document with the original signature and date is maintained by DOE. For administrative purposes only, and in compliance with requirements of the Office of the Federal Register, the undersigned DOE **Federal Register** Liaison Officer has been authorized to sign and submit the document in electronic format for publication, as an official document of the Department of Energy. This administrative process in no way alters the legal effect of this document upon publication in the **Federal Register**.

Signed in Washington, DC, on June 24, 2022.

Treena V. Garrett,

Federal Register Liaison Officer, U.S. Department of Energy.

[FR Doc. 2022–13946 Filed 6–29–22; 8:45 am]

BILLING CODE 6450–01–P

DEPARTMENT OF ENERGY

Federal Energy Regulatory Commission

[Docket Nos. CP21–1–000; CP21–458–000]

Golden Pass Pipeline, LLC; Notice of Availability of the Final Environmental Impact Statement for the Proposed Mp66–69 Compressor Relocation and Modification Amendment and the Mp33 Compressor Station Modification Amendment Project

The staff of the Federal Energy Regulatory Commission (FERC or Commission) has prepared a final environmental impact statement (EIS) for the MP66–69 Compression Relocation and Modification Amendment and the MP33 Compressor Station Modification Amendment Project (Project), proposed by Golden Pass Pipeline, LLC (Golden Pass), in the above referenced dockets. Golden Pass requests authorization to amend its certificate of public convenience and necessity for the Pipeline Expansion Project (Docket No. CP14–518–000) that was issued by the Commission on December 21, 2016. Golden Pass requests authorization to modify the previously authorized facilities in Calcasieu Parish, Louisiana and Orange County, Texas.

The final EIS assesses the potential environmental effects of the construction and operation of the Project in accordance with the requirements of the National Environmental Policy Act (NEPA). The FERC staff concludes that approval of the proposed Project, with the mitigation measures recommended in this EIS, would not result in significant environmental impacts, with the exception of climate change impacts. The EIS does not characterize the Project's greenhouse gas emissions as significant or insignificant because the Commission is conducting a generic proceeding to determine whether and how the Commission will conduct climate change significance determinations going forward.[1]

The final EIS incorporates by reference the Commission staff's July 2016 Final Environmental Impact Statement (FEIS) issued in Docket Nos. CP14–517–000 and CP14–518–000 for the Golden Pass LNG Export Project (2016 FEIS) and the Commission's findings and conclusions in its December 21, 2016 Order. The final EIS addresses the potential environmental effects of the construction and operation of the following Project facilities:

CP21–1–000 (Calcasieu Parish, Louisiana)

- relocate the approved Compressor Station at Milepost (MP) 66 approximately three miles, to MP69;
- increase the amount of compression at the relocated compressor station;
- eliminate approved modifications to interconnects at MP63 and MP66;
- minor changes to approved interconnect modifications at MP68; and
- eliminate the previously approved 3 miles of 24-inch-diameter pipeline loop between MP66 and MP69.

CP21–458–000 (Orange County, Texas)

- relocate the MP33 Compressor Station approximately fifty feet north-northwest to avoid an existing pipeline right-of-way based on a landowner request;
- increase the authorized compression at the MP33 Compressor Station;
- construct three new interconnects and appurtenant facilities adjacent to the MP33 Compressor Station; and
- eliminate receipt stations at the existing Texoma delivery interconnect on Golden Pass's existing system at MP33.

The Commission mailed a copy of the *Notice of Availability of the Final Environmental Impact Statement for the MP66–69 Compression Relocation and Modification Amendment and the MP33 Compressor Station Modification Amendment Project* to federal, state, and local government representatives and agencies; elected officials; environmental and public interest groups; Native American tribes; potentially affected landowners and other interested individuals and groups; and newspapers and libraries in the Project area. The final EIS is only available in electronic format. It may be viewed and downloaded from the FERC's website (*www.ferc.gov*), on the natural gas environmental documents page (*https://www.ferc.gov/industries-data/natural-gas/environment/environmental-documents*). In addition, the final EIS may be accessed by using the eLibrary link on the FERC's website. Click on the eLibrary link (*https://elibrary.ferc.gov/eLibrary/search*) select

[1] Consideration of Greenhouse Gas Emissions in Natural Gas Infrastructure Project Reviews, 178 FERC ¶ 61,108 (2022); 178 FERC ¶ 61,197 (2022).

''General Search'' and enter the docket number in the ''Docket Number'' field (*i.e.* CP21–1–000 or CP21–458–000). Be sure you have selected an appropriate date range. For assistance, please contact FERC Online Support at *FercOnlineSupport@ferc.gov* or toll free at (866) 208–3676, or for TTY, contact (202) 502–8659.

The final EIS is not a decision document. It presents Commission staff's independent analysis of the environmental issues for the Commission to consider when addressing the merits of all issues in this proceeding.

Additional information about the Project is available from the Commission's Office of External Affairs, at (866) 208–FERC, or on the FERC website (*www.ferc.gov*) using the eLibrary link. The eLibrary link also provides access to the texts of all formal documents issued by the Commission, such as orders, notices, and rulemakings.

In addition, the Commission offers a free service called eSubscription that allows you to keep track of all formal issuances and submittals in specific dockets. This can reduce the amount of time you spend researching proceedings by automatically providing you with notification of these filings, document summaries, and direct links to the documents. Go to *https://www.ferc.gov/ferc-online/overview* to register for eSubscription.

Dated: June 24, 2022.

Debbie-Anne A. Reese,

Deputy Secretary.

[FR Doc. 2022–14014 Filed 6–29–22; 8:45 am]

BILLING CODE 6717–01–P

DEPARTMENT OF ENERGY

Federal Energy Regulatory Commission

Combined Notice of Filings #1

Take notice that the Commission received the following exempt wholesale generator filings:

Docket Numbers: EG22–152–000.
Applicants: Northwest Ohio IA, LLC.
Description: Northwest Ohio IA, LLC submits Notice of Self-Certification of Exempt Wholesale Generator Status.
Filed Date: 6/23/22.
Accession Number: 20220623–5184.
Comment Date: 5 p.m. ET 7/14/22.

Docket Numbers: EG22–153–000.
Applicants: Northwest Ohio Solar, LLC.
Description: Northwest Ohio Solar, LLC submits Notice of Self-Certification of Exempt Wholesale Generator Status.
Filed Date: 6/23/22.
Accession Number: 20220623–5185.
Comment Date: 5 p.m. ET 7/14/22.

Docket Numbers: EG22–154–000.
Applicants: EDPR CA Solar Park LLC.
Description: Notice of Self-Certification of Exempt Wholesale Generator Status of EDPR CA Solar Park LLC under.
Filed Date: 6/24/22.
Accession Number: 20220624–5147.
Comment Date: 5 p.m. ET 7/15/22.

Docket Numbers: EG22–155–000.
Applicants: EDPR CA Solar Park II LLC.
Description: EDPR CA Solar Park II LLC submits Notice of Self-Certification of Exempt Wholesale Generator Status.
Filed Date: 6/24/22.
Accession Number: 20220624–5152.
Comment Date: 5 p.m. ET 7/15/22.

Docket Numbers: EG22–156–000.
Applicants: EDPR Scarlet I LLC.
Description: Notice of Self-Certification of Exempt Wholesale Generator Status of EDPR Scarlet I LLC.
Filed Date: 6/24/22.
Accession Number: 20220624–5153.
Comment Date: 5 p.m. ET 7/15/22.

Take notice that the Commission received the following electric rate filings:

Docket Numbers: ER18–1150–006.
Applicants: Trishe Wind Ohio, LLC.
Description: Notice of Non-Material Change in Status of Northwest Ohio Wind, LLC.
Filed Date: 6/24/22.
Accession Number: 20220624–5016.
Comment Date: 5 p.m. ET 7/15/22.

Docket Numbers: ER20–1085–002.
Applicants: Virginia Electric and Power Company, PJM Interconnection, L.L.C.
Description: Compliance filing: Virginia Electric and Power Company submits tariff filing per 35: Dominion submits Second Order No. 864 Compliance Filing in ER20–1085 to be effective N/A.
Filed Date: 6/24/22.
Accession Number: 20220624–5098.
Comment Date: 5 p.m. ET 7/15/22.

Docket Numbers: ER22–1520–001.
Applicants: Commonwealth Edison Company, PJM Interconnection, L.L.C.
Description: Tariff Amendment: Commonwealth Edison Company submits tariff filing per 35.17(b): Commonwealth Edison submits response to May 26 Deficiency Notice to be effective 9/1/2022.
Filed Date: 6/24/22.
Accession Number: 20220624–5118.
Comment Date: 5 p.m. ET 7/15/22.

Docket Numbers: ER22–1645–001.
Applicants: Pacific Gas and Electric Company.
Description: Compliance filing: Compliance Filing E&P Proforma Letter Agreement WDT to be effective 6/15/2022.
Filed Date: 6/24/22.
Accession Number: 20220624–5087.
Comment Date: 5 p.m. ET 7/15/22.

Docket Numbers: ER22–2025–000.
Applicants: Southern California Edison Company.
Description: Report Filing: SCE Errata to Tule Hydropower LA to Correct Effective Date (ER22–2025) to be effective N/A.
Filed Date: 6/23/22.
Accession Number: 20220623–5067.
Comment Date: 5 p.m. ET 7/14/22.

Docket Numbers: ER22–2180–000.
Applicants: New York State Electric & Gas Corporation.
Description: § 205(d) Rate Filing: Certificate of Concurrence to CSRA to be effective 8/22/2022.
Filed Date: 6/23/22.
Accession Number: 20220623–5164.
Comment Date: 5 p.m. ET 7/14/22.

Docket Numbers: ER22–2181–000.
Applicants: Rochester Gas and Electric Corporation.
Description: § 205(d) Rate Filing: Certificate of Concurrence to CSRA to be effective 8/22/2022.
Filed Date: 6/23/22.
Accession Number: 20220623–5168.
Comment Date: 5 p.m. ET 7/14/22.

Docket Numbers: ER22–2182–000.
Applicants: Bruce Power Inc.
Description: Compliance filing: Revised MBR Tariff and New eTariff Baseline Filing to be effective 6/24/2022.
Filed Date: 6/23/22.
Accession Number: 20220623–5171.
Comment Date: 5 p.m. ET 7/14/22.

Docket Numbers: ER22–2183–000.
Applicants: Central Hudson Gas & Electric Corporation.
Description: Central Hudson Gas and Electric Corporation submits Certificate of Concurrence and tariff record incorporating Con Ed's CSRA.
Filed Date: 6/22/22.
Accession Number: 20220622–5142.
Comment Date: 5 p.m. ET 7/13/22.

Docket Numbers: ER22–2184–000.
Applicants: City of Vernon, California.
Description: Tariff Amendment: Notice of Cancellation of Transmission Owner Tariff to be effective 10/7/2022.
Filed Date: 6/24/22.
Accession Number: 20220624–5015.
Comment Date: 5 p.m. ET 7/15/22.

Docket Numbers: ER22–2185–000.
Applicants: Black Hills Colorado Electric, LLC.
Description: § 205(d) Rate Filing: Transmission Formula Rate Template and Protocols to be effective 9/1/2022.

Filed Date: 6/24/22.
Accession Number: 20220624–5032.
Comment Date: 5 p.m. ET 7/15/22.

Docket Numbers: ER22–2186–000.
Applicants: AEP Texas Inc.
Description: § 205(d) Rate Filing: AEPTX-Los Vientos Windpower 1B 1st A&R Generation Interconnection Agreement to be effective 6/3/2022.
Filed Date: 6/24/22.
Accession Number: 20220624–5036.
Comment Date: 5 p.m. ET 7/15/22.

Docket Numbers: ER22–2187–000.
Applicants: Northwest Ohio Solar, LLC.
Description: Baseline eTariff Filing: Application of Northwest Ohio Solar, LLC for Market-Based Rate Authority to be effective 8/23/2022.
Filed Date: 6/24/22.
Accession Number: 20220624–5050.
Comment Date: 5 p.m. ET 7/15/22.

Docket Numbers: ER22–2188–000.
Applicants: Northwest Ohio IA, LLC.
Description: Baseline eTariff Filing: Application of Northwest Ohio IA, LLC for Market-Based Rate Authority to be effective 8/23/2022.
Filed Date: 6/24/22.
Accession Number: 20220624–5051.
Comment Date: 5 p.m. ET 7/15/22.

Docket Numbers: ER22–2189–000.
Applicants: Vermont Transco LLC.
Description: § 205(d) Rate Filing: Shared Structure Participation Agreements Filing to be effective 1/1/2022.
Filed Date: 6/24/22.
Accession Number: 20220624–5064.
Comment Date: 5 p.m. ET 7/15/22.

Docket Numbers: ER22–2190–000.
Applicants: EDPR CA Solar Park LLC.
Description: Baseline eTariff Filing: Market-Based Rate Application to be effective 8/24/2022.
Filed Date: 6/24/22.
Accession Number: 20220624–5117.
Comment Date: 5 p.m. ET 7/15/22.

Docket Numbers: ER22–2191–000.
Applicants: EDPR CA Solar Park II LLC.
Description: Baseline eTariff Filing: Market-Based Rate Application to be effective 8/24/2022.
Filed Date: 6/24/22.
Accession Number: 20220624–5119.
Comment Date: 5 p.m. ET 7/15/22.

Docket Numbers: ER22–2192–000.
Applicants: EDPR Scarlet I LLC.
Description: Baseline eTariff Filing: Market-Based Rate Application to be effective 8/24/2022.
Filed Date: 6/24/22.
Accession Number: 20220624–5120.
Comment Date: 5 p.m. ET 7/15/22.

Docket Numbers: ER22–2193–000.
Applicants: Duke Energy Florida, LLC.
Description: § 205(d) Rate Filing: DEF–TECO Concurrence RS No. 379 to be effective 9/1/2022.
Filed Date: 6/24/22.
Accession Number: 20220624–5129.
Comment Date: 5 p.m. ET 7/15/22.

Docket Numbers: ER22–2194–000.
Applicants: Northern Indiana Public Service Company LLC.
Description: § 205(d) Rate Filing: Porter CIAC Agreement to be effective 6/18/2022.
Filed Date: 6/24/22.
Accession Number: 20220624–5135.
Comment Date: 5 p.m. ET 7/15/22.

Take notice that the Commission received the following PURPA 210(m)(3) filings:

Docket Numbers: QM22–12–000.
Applicants: PPL Electric Utilities Corporation.
Description: Application of PPL Electric Utilities Corporation to Terminate Its Mandatory Purchase Obligation under the Public Utility Regulatory Policies Act of 1978.
Filed Date: 6/23/22.
Accession Number: 20220623–5173.
Comment Date: 5 p.m. ET 7/21/22.

Docket Numbers: QM22–13–000.
Applicants: Upper Michigan Energy Resources Corporation.
Description: Application of Upper Michigan Energy Resources Group to Terminate Its Mandatory Purchase Obligation under the Public Utility Regulatory Policies Act of 1978.
Filed Date: 6/24/22.
Accession Number: 20220624–5151.
Comment Date: 5 p.m. ET 7/22/22.

The filings are accessible in the Commission's eLibrary system (*https://elibrary.ferc.gov/idmws/search/fercgensearch.asp*) by querying the docket number.

Any person desiring to intervene or protest in any of the above proceedings must file in accordance with Rules 211 and 214 of the Commission's Regulations (18 CFR 385.211 and 385.214) on or before 5:00 p.m. Eastern time on the specified comment date. Protests may be considered, but intervention is necessary to become a party to the proceeding.

eFiling is encouraged. More detailed information relating to filing requirements, interventions, protests, service, and qualifying facilities filings can be found at: *http://www.ferc.gov/docs-filing/efiling/filing-req.pdf.* For other information, call (866) 208–3676 (toll free). For TTY, call (202) 502–8659.

Dated: June 24, 2022.

Debbie-Anne A. Reese,

Deputy Secretary.

[FR Doc. 2022–14011 Filed 6–29–22; 8:45 am]

BILLING CODE 6717–01–P

DEPARTMENT OF ENERGY

Federal Energy Regulatory Commission

Combined Notice of Filing

Take notice that the Commission has received the following Natural Gas Pipeline Rate and Refund Report filings:

Filings Instituting Proceedings

Docket Numbers: RP22–991–000.
Applicants: Equitrans, L.P.
Description: Compliance filing: Notice Regarding Non-Certificated Gathering Facilities (M–73 System) to be effective N/A.
Filed Date: 6/23/22.
Accession Number: 20220623–5143.
Comment Date: 5 p.m. ET 7/5/22.

Any person desiring to intervene or protest in any of the above proceedings must file in accordance with Rules 211 and 214 of the Commission's Regulations (18 CFR 385.211 and 385.214) on or before 5:00 p.m. Eastern time on the specified comment date. Protests may be considered, but intervention is necessary to become a party to the proceeding.

The filings are accessible in the Commission's eLibrary system (*https://elibrary.ferc.gov/idmws/search/fercgensearch.asp*) by querying the docket number.

eFiling is encouraged. More detailed information relating to filing requirements, interventions, protests, service, and qualifying facilities filings can be found at: *http://www.ferc.gov/docs-filing/efiling/filing-req.pdf.* For other information, call (866) 208–3676 (toll free). For TTY, call (202) 502–8659.

Dated: June 24, 2022.

Debbie-Anne A. Reese,

Deputy Secretary.

[FR Doc. 2022–14010 Filed 6–29–22; 8:45 am]

BILLING CODE 6717–01–P

DEPARTMENT OF ENERGY

Federal Energy Regulatory Commission

[Docket No. CP22–25–000]

Venture Global Calcasieu Pass, LLC; Notice of Revised Schedule for Environmental Review of the Calcasieu Pass Uprate Amendment Project

This notice identifies the Federal Energy Regulatory Commission (FERC) staff's revised schedule for the completion of the environmental assessment (EA) for Venture Global Calcasieu Pass, LLC's (Calcasieu Pass) Uprate Amendment Project. The first

notice of schedule, issued on April 27, 2022, identified June 24, 2022 as the EA issuance date. However, this schedule was based upon Calcasieu Pass providing complete and timely responses to any data requests. Commission staff issued an engineering data request to Calcasieu Pass on May 9, 2022, requesting responses by May 14 and May 23, 2022. Calcasieu Pass's responses to those requests were filed on May 20 and June 3, 2022. Due to Calcasieu Pass' delay in responding to FERC staff's May 9, 2022 data request, staff must revise the schedule for issuance of the EA.

Schedule for Environmental Review

Issuance of the EA—August 5, 2022

90-day Federal Authorization Decision Deadline [1]—November 3, 2022

If a schedule change becomes necessary, an additional notice will be provided so that the relevant agencies are kept informed of the project's progress.

Additional Information

In order to receive notification of the issuance of the EA and to keep track of all formal issuances and submittals in specific dockets, the Commission offers a free service called eSubscription. This can reduce the amount of time you spend researching proceedings by automatically providing you with notification of these filings, document summaries, and direct links to the documents. Go to *https://www.ferc.gov/ferc-online/overview* to register for eSubscription.

Additional information about the project is available from the Commission's Office of External Affairs at (866) 208–FERC or on the FERC website (*www.ferc.gov*). Using the ''eLibrary'' link, select ''General Search'' from the eLibrary menu, enter the selected date range and ''Docket Number'' (*i.e.,* CP22–25–000), and follow the instructions. For assistance with access to eLibrary, the helpline can be reached at (866) 208–3676, TTY (202) 502–8659, or at *FERCOnlineSupport@ferc.gov.* The eLibrary link on the FERC website also provides access to the texts of formal documents issued by the Commission, such as orders, notices, and rule makings.

[1] The Commission's deadline applies to the decisions of other federal agencies, and state agencies acting under federally delegated authority, that are responsible for federal authorizations, permits, and other approvals necessary for proposed projects under the Natural Gas Act. Per 18 CFR 157.22(a), the Commission's deadline for other agency's decisions applies unless a schedule is otherwise established by federal law.

Dated: June 24, 2022.

Debbie-Anne A. Reese,

Deputy Secretary.

[FR Doc. 2022–14013 Filed 6–29–22; 8:45 am]

BILLING CODE 6717–01–P

DEPARTMENT OF ENERGY

Federal Energy Regulatory Commission

[Docket No. ER22–2178–000]

ORNI 50 LLC; Supplemental Notice That Initial Market-Based Rate Filing Includes Request for Blanket Section 204 Authorization

This is a supplemental notice in the above-referenced proceeding of ORNI 50 LLC's application for market-based rate authority, with an accompanying rate tariff, noting that such application includes a request for blanket authorization, under 18 CFR part 34, of future issuances of securities and assumptions of liability.

Any person desiring to intervene or to protest should file with the Federal Energy Regulatory Commission, 888 First Street NE, Washington, DC 20426, in accordance with Rules 211 and 214 of the Commission's Rules of Practice and Procedure (18 CFR 385.211 and 385.214). Anyone filing a motion to intervene or protest must serve a copy of that document on the Applicant.

Notice is hereby given that the deadline for filing protests with regard to the applicant's request for blanket authorization, under 18 CFR part 34, of future issuances of securities and assumptions of liability, is July 14, 2022.

The Commission encourages electronic submission of protests and interventions in lieu of paper, using the FERC Online links at *http://www.ferc.gov.* To facilitate electronic service, persons with internet access who will eFile a document and/or be listed as a contact for an intervenor must create and validate an eRegistration account using the eRegistration link. Select the eFiling link to log on and submit the intervention or protests.

Persons unable to file electronically may mail similar pleadings to the Federal Energy Regulatory Commission, 888 First Street NE, Washington, DC 20426. Hand delivered submissions in docketed proceedings should be delivered to Health and Human Services, 12225 Wilkins Avenue, Rockville, Maryland 20852.

In addition to publishing the full text of this document in the **Federal Register**, the Commission provides all interested persons an opportunity to view and/or print the contents of this document via the internet through the Commission's Home Page (*http://www.ferc.gov*) using the ''eLibrary'' link. Enter the docket number excluding the last three digits in the docket number field to access the document. At this time, the Commission has suspended access to the Commission's Public Reference Room, due to the proclamation declaring a National Emergency concerning the Novel Coronavirus Disease (COVID–19), issued by the President on March 13, 2020. For assistance, contact the Federal Energy Regulatory Commission at *FERCOnlineSupport@ferc.gov* or call toll-free, (886) 208–3676 or TYY, (202) 502–8659.

Dated: June 24, 2022.

Debbie-Anne A. Reese,

Deputy Secretary.

[FR Doc. 2022–14012 Filed 6–29–22; 8:45 am]

BILLING CODE 6717–01–P

ENVIRONMENTAL PROTECTION AGENCY

[EPA–HQ–OPPT–2016–0732; FRL–9942–01–OCSPP]

Perchloroethylene (PCE); Draft Revision to Toxic Substances Control Act (TSCA) Risk Determination; Notice of Availability and Request for Comment

AGENCY: Environmental Protection Agency (EPA).

ACTION: Notice.

SUMMARY: The Environmental Protection Agency (EPA) is announcing the availability of and seeking public comment on a draft revision to the risk determination for the Perchloroethylene (PCE) risk evaluation issued under TSCA. The draft revision to the PCE risk determination reflects the announced policy changes to ensure the public is protected from unreasonable risks from chemicals in a way that is supported by science and the law. In this draft revision to the risk determination EPA finds that PCE, as a whole chemical substance, presents an unreasonable risk of injury to health when evaluated under its conditions of use. In addition, this revised risk determination does not reflect an assumption that all workers always appropriately wear personal protective equipment (PPE). EPA understands that there could be occupational safety protections in place at workplace locations; however, not assuming use of PPE reflects EPA's recognition that unreasonable risk may

exist for subpopulations of workers that may be highly exposed because they are not covered by OSHA standards, or their employers are out of compliance with OSHA standards, or because many of OSHA's chemical-specific permissible exposure limits largely adopted in the 1970's are described by OSHA as being ''outdated and inadequate for ensuring protection of worker health.'' This revision, when final, would supersede the condition of use-specific no unreasonable risk determinations in the December 2020 PCE risk evaluation (and withdraw the associated order) and would make a revised determination of unreasonable risk for PCE as a whole chemical substance.

DATES: Comments must be received on or before August 1, 2022.

ADDRESSES: Submit your comments, identified by docket identification (ID) number EPA— EPA–HQ–OPPT–2016–0732, using the *Federal eRulemaking Portal* at *https://www.regulations.gov.* Follow the online instructions for submitting comments. Do not submit electronically any information you consider to be Confidential Business Information (CBI) or other information whose disclosure is restricted by statute. Additional instructions on commenting and visiting the docket, along with more information about dockets generally, is available at *https://www.epa.gov/dockets.*

FOR FURTHER INFORMATION CONTACT: *For technical information contact:* Kelly Summers, Office of Pollution Prevention and Toxics (7404M), Environmental Protection Agency, 1200 Pennsylvania Ave. NW, Washington, DC 20460–0001; telephone number: (202) 564–2201; email address: *summers.kelly@epa.gov.*

For general information contact: The TSCA-Hotline, ABVI-Goodwill, 422 South Clinton Ave., Rochester, NY 14620; telephone number: (202) 554–1404; email address: *TSCA-Hotline@epa.gov.*

SUPPLEMENTARY INFORMATION:

I. Executive Summary

A. Does this action apply to me?

This action is directed to the public in general. This action may, however, be of interest to those involved in the manufacture, processing, distribution, use, disposal, and/or the assessment of risks involving chemical substances and mixtures. You may be potentially affected by this action if you manufacture (defined under TSCA to include import), process (including recycling), distribute in commerce, use or dispose of PCE, including PCE in products. Since other entities may also be interested in this draft revision to the risk determination, EPA has not attempted to describe all the specific entities that may be affected by this action.

B. What is EPA's authority for taking this action?

TSCA section 6, 15 U.S.C. 2605, requires EPA to conduct risk evaluations to determine whether a chemical substance presents an unreasonable risk of injury to health or the environment, without consideration of costs or other non-risk factors, including an unreasonable risk to a potentially exposed or susceptible subpopulation (PESS) identified as relevant to the risk evaluation by the Administrator, under the conditions of use. 15 U.S.C. 2605(b)(4)(A). TSCA sections 6(b)(4)(A) through (H) enumerate the deadlines and minimum requirements applicable to this process, including provisions that provide instruction on chemical substances that must undergo evaluation, the minimum components of a TSCA risk evaluation, and the timelines for public comment and completion of the risk evaluation. TSCA also requires that EPA operate in a manner that is consistent with the best available science, make decisions based on the weight of the scientific evidence, and consider reasonably available information. 15 U.S.C. 2625(h), (i), and (k).

The statute identifies the minimum components for all chemical substance risk evaluations. For each risk evaluation, EPA must publish a document that outlines the scope of the risk evaluation to be conducted, which includes the hazards, exposures, conditions of use, and the potentially exposed or susceptible subpopulations that EPA expects to consider. 15 U.S.C. 2605(b)(4)(D). The statute further provides that each risk evaluation must also: (1) Integrate and assess available information on hazards and exposures for the conditions of use of the chemical substance, including information that is relevant to specific risks of injury to health or the environment and information on relevant potentially exposed or susceptible subpopulations; (2) Describe whether aggregate or sentinel exposures were considered and the basis for that consideration; (3) Take into account, where relevant, the likely duration, intensity, frequency, and number of exposures under the conditions of use; and (4) Describe the weight of the scientific evidence for the identified hazards and exposures. 15 U.S.C. 2605(b)(4)(F)(i) through (ii) and (iv) through (v). Each risk evaluation must not consider costs or other non-risk factors. 15 U.S.C. 2605(b)(4)(F)(iii).

EPA has inherent authority to reconsider previous decisions and to revise, replace, or repeal a decision to the extent permitted by law and supported by reasoned explanation. *FCC* v. *Fox Television Stations, Inc.,* 556 U.S. 502, 515 (2009); *see also Motor Vehicle Mfrs. Ass'n* v. *State Farm Mutual Auto. Ins. Co.,* 463 U.S. 29, 42 (1983). Pursuant to such authority, EPA is reconsidering the risk determinations in the December 2020 PCE Risk Evaluation.

C. What action is EPA taking?

EPA is announcing the availability of and seeking public comment on a draft revision to the risk determination for the risk evaluation for PCE under TSCA, which was initially published in December 2020 (Ref. 1). EPA is specifically seeking public comment on the draft revision to the risk determination for the risk evaluation where the agency intends to determine that PCE, as a whole chemical, presents an unreasonable risk of injury to health when evaluated under its conditions of use. The Agency's risk determination for PCE is better characterized as a whole chemical risk determination rather than condition-of-use-specific risk determinations. Accordingly, EPA would revise and replace section 5 of the risk evaluation for PCE where the findings of unreasonable risk to health were previously made for the individual conditions of use evaluated. EPA would also withdraw the order issued previously for two conditions of use previously determined not to present unreasonable risk.

This revision would be consistent with EPA's plans to revise specific aspects of the first ten TSCA chemical risk evaluations in order to ensure that the risk evaluations better align with TSCA's objective of protecting health and the environment. Under the draft revision, removing the assumption that workers always and appropriately wear PPE (see Unit II.C.) in making the whole chemical risk determination for PCE would mean that: one condition of use in addition to the original 59 conditions of use would drive the unreasonable risk for PCE; an additional route of exposure (*i.e.,* inhalation) would also be identified as driving the unreasonable risk to workers in many of those 59 conditions of use; and additional risks for acute non-cancer effects and cancer from inhalation and dermal exposures would also drive the unreasonable risk in many of those 59 conditions of use (where previously those conditions of use were identified as presenting

unreasonable risk only for chronic non-cancer effects or for chronic non-cancer effects and cancer). Overall, 60 conditions of use out of 61 EPA evaluated would drive the PCE whole chemical unreasonable risk determination due to risks identified for human health. The full list of the conditions of use evaluated for the PCE TSCA risk evaluation is in Tables 4–125 and 4–126 of the risk evaluation (Ref. 2).

D. What should I consider as I prepare my comments for EPA?

1. *Submitting CBI.* Do not submit this information to EPA through regulations.gov or email. Clearly mark the part or all of the information that you claim to be CBI. For CBI information in a disk or CD–ROM that you mail to EPA, mark the outside of the disk or CD–ROM as CBI and then identify electronically within the disk or CD–ROM the specific information that is claimed CBI. In addition to one complete version of the comment that includes information claimed as CBI, a copy of the comment that does not contain the information claimed as CBI must be submitted for inclusion in the public docket. Information so marked will not be disclosed except in accordance with procedures set forth in 40 CFR part 2.

2. *Tips for preparing your comments.* When preparing and submitting your comments, see the commenting tips at *https://www.epa.gov/dockets/comments.html.*

II. Background

A. Why is EPA re-issuing the risk determination for the PCE risk evaluation conducted under TSCA?

In 2016, as directed by TSCA section 6(b)(2)(A), EPA chose the first ten chemical substances to undergo risk evaluations under the amended TSCA. These chemical substances are asbestos, 1-bromopropane, carbon tetrachloride, C.I. Pigment Violet (PV 29), cyclic aliphatic bromide cluster (HBCD), 1,4-dioxane, methylene chloride, n-methylpyrrolidone (NMP), perchloroethylene (PCE), and trichloroethylene (TCE).

From June 2020 to January 2021, EPA published risk evaluations on the first ten chemical substances, including for PCE in December 2020. The risk evaluations included individual unreasonable risk determinations for each condition of use evaluated. EPA issued determinations that particular conditions of use did not present an unreasonable risk by order under TSCA section 6(i)(1).

In accordance with Executive Order 13990 (Ref. 3) and other Administration priorities (Refs. 4, 5, and 6), EPA reviewed the risk evaluations for the first ten chemical substances, including PCE, to ensure that they meet the requirements of TSCA, including conducting decision making in a manner that is consistent with the best available science.

As a result of this review, EPA announced plans to revise specific aspects of the first ten risk evaluations in order to ensure that the risk evaluations appropriately identify unreasonable risks and thereby help ensure the protection of human health and the environment (Ref. 7). To that end, EPA is reconsidering two key aspects of the risk determinations for PCE published in December 2020. First, following a review of specific aspects of the December 2020 PCE risk evaluation, EPA proposes that making an unreasonable risk determination for PCE as a whole chemical substance, rather than making unreasonable risk determinations separately on each individual condition of use evaluated in the risk evaluation, is the most appropriate approach to PCE under the statute and implementing regulations. Second, EPA proposes that the risk determination should be explicit that it does not rely on assumptions regarding the use of personal protective equipment (PPE) in making the unreasonable risk determination under TSCA section 6, even though some facilities might be using PPE as one means to reduce workers' exposures; rather, the use of PPE would be considered during risk management as appropriate.

Separately, EPA is conducting a screening approach to assess potential risks from the air and water pathways for several of the first 10 chemicals, including this chemical. For PCE the exposure pathways that were or could be regulated under another EPA administered statute were excluded from the final risk evaluation (see section 1.4.2 of the December 2020 PCE risk evaluation). This resulted in the ambient air and ambient water pathways for PCE not being assessed. The goal of the recently-developed screening approach is to remedy this exclusion and to identify if there are risks that were unaccounted for in the PCE risk evaluation. While this analysis is underway, EPA is not incorporating the screening-level approach into this draft revised unreasonable risk determination. If the results suggest there is additional risk, EPA will determine if the risk management approaches being contemplated for PCE will protect against these risks or if the risk evaluation will need to be formally supplemented or revised.

This action pertains only to the risk determination for PCE. While EPA intends to consider and may take additional similar actions on other of the first ten chemicals, EPA is taking a chemical-specific approach to reviewing the risk evaluations and is incorporating new policy direction in a surgical manner, while being mindful of the Congressional direction on the need to complete risk evaluations and move toward any associated risk management activities in accordance with statutory deadlines.

B. What is a whole chemical view of the unreasonable risk determination for the PCE risk evaluation?

TSCA section 6 repeatedly refers to determining whether a chemical *substance* presents unreasonable risk under its conditions of use. Stakeholders have disagreed over whether a chemical substance should receive: A single determination that is comprehensive for the chemical substance after considering the conditions of use, referred to as a whole-chemical determination; or multiple determinations, each of which is specific to a condition of use, referred to as condition-of-use-specific determinations.

The proposed risk evaluation procedural rule was premised on the whole chemical approach to making an unreasonable risk determination (Ref. 8). In that proposed rule, EPA acknowledged a lack of specificity in statutory text that might lead to different views about whether the statute compelled EPA's risk evaluations to address all conditions of use of a chemical substance or whether EPA had discretion to evaluate some subset of conditions of use (*i.e.,* to scope out some manufacturing, processing, distribution in commerce, use, or disposal activities), but also stated that ''EPA believes the word 'the' [in TSCA section 6(b)(4)(A)] is best interpreted as calling for evaluation that considers all conditions of use.'' (Ref. 8).

The proposed rule, however, was unambiguous on the point that an unreasonable risk determination would be for the chemical substance as a whole, even if based on a subset of uses. (See Ref. 8 at pgs. 7565–66: ''TSCA section 6(b)(4)(A) specifies that a risk evaluation must determine whether 'a chemical substance' presents an unreasonable risk of injury to health or the environment 'under the conditions of use.' The evaluation is on the chemical substance—not individual

conditions of use—and it must be based on 'the conditions of use.' In this context, EPA believes the word 'the' is best interpreted as calling for evaluation that considers all conditions of use.''). In the proposed regulatory text, EPA proposed to determine whether the chemical substance presents an unreasonable risk of injury to health or the environment under the conditions of use (Ref. 8 at pg. 7480).

The final risk evaluation procedural rule (Ref. 9) stated: ''As part of the risk evaluation, EPA will determine whether the chemical substance presents an unreasonable risk of injury to health or the environment under each condition of uses [sic] within the scope of the risk evaluation, either in a single decision document or in multiple decision documents.'' (See also 40 CFR 702.47). For the unreasonable risk determinations in the first ten risk evaluations, EPA applied this provision by making individual risk determinations for each condition of use evaluated in each risk evaluation (*i.e.,* the condition-of-use-specific approach to risk determinations). That approach was based on one particular passage in the preamble to the final risk evaluation procedural rule, which stated that EPA will make individual risk determinations for all conditions of use identified in the scope. (Ref. 9 at pg. 33744).

In contrast to this portion of the preamble of the final risk evaluation procedural rule, the regulatory text itself and other statements in the preamble reference a risk determination *for the chemical substance* under its conditions of use, rather than separate risk determinations for each of the conditions of use of a chemical substance. In the key regulatory provision excerpted earlier from 40 CFR 702.47, the text explains that ''[a]s part of the risk evaluation, EPA will determine whether *the chemical substance* presents an unreasonable risk of injury to health or the environment under each condition of uses [sic] within the scope of the risk evaluation, either in a single decision document or in multiple decision documents'' (Ref. 9, emphasis added). Other language reiterates this perspective. For example, 40 CFR 702.31(a) states that the purpose of the rule is to establish the EPA process for conducting a risk evaluation to determine whether a chemical substance presents an unreasonable risk of injury to health or the environment as required under TSCA section 6(b)(4)(B). Likewise, there are recurring references to whether the chemical substance presents an unreasonable risk in 40 CFR 702.41(a). See, for example, 40 CFR 702.41(a)(6), which explains that the extent to which EPA will refine its evaluations for one or more condition of use in any risk evaluation will vary as necessary to determine whether a chemical substance presents an unreasonable risk. Notwithstanding the one preambular statement about condition-of-use-specific risk determinations, the preamble to the final rule also contains support for a risk determination on the chemical substance as a whole. In discussing the identification of the conditions of use of a chemical substance, the preamble notes that this task inevitably involves the exercise of discretion on EPA's part, and ''as EPA interprets the statute, the Agency is to exercise that discretion consistent with the objective of conducting a technically sound, manageable evaluation to determine whether a chemical substance—not just individual uses or activities—presents an unreasonable risk.'' (Ref. 8 at pg. 33729).

Therefore, notwithstanding EPA's choice to issue condition-of-use-specific risk determinations to date, EPA interprets its risk evaluation regulation to also allow the Agency to issue whole-chemical risk determinations. Either approach is permissible under the regulation. A panel of the Ninth Circuit Court of Appeals also recognized the ambiguity of the regulation on this point. *Safer Chemicals* v. *EPA, 943 F.3d 397, 413* (9th Cir. 2019) (holding a challenge about ''use-by-use risk evaluations [was] not justiciable because it is not clear, due to the ambiguous text of the Risk Evaluation Rule, whether the Agency will actually conduct risk evaluations in the manner Petitioners fear'').

EPA plans to consider the appropriate approach for each chemical substance risk evaluation on a case-by-case basis, taking into account considerations relevant to the specific chemical substance in light of the Agency's obligations under TSCA. The Agency expects that this case-by-case approach will provide greater flexibility in the Agency's ability to evaluate and manage unreasonable risk from individual chemical substances. EPA believes this is a reasonable approach under TSCA and the Agency's implementing regulations.

With regard to the specific circumstances of PCE, as further explained in this notice, EPA proposes that a whole chemical approach is appropriate for PCE in order to protect health and the environment. The whole chemical approach is appropriate for PCE because there are benchmark exceedances for multiple conditions of use (spanning across most aspects of the chemical lifecycle–from manufacturing (including import), processing, industrial and commercial use, consumer use, and disposal) for health of workers, occupational non-users, consumers, and bystanders and the irreversible health effects (specifically neurotoxicity and cancer) associated with PCE exposures. Because these chemical-specific properties cut across the conditions of use within the scope of the risk evaluation, a substantial amount of the conditions of use drive the unreasonable risk; therefore, it is appropriate for the Agency to make a determination for PCE that the whole chemical presents an unreasonable risk.

As explained later in this document, the revisions to the unreasonable risk determination (section 5 of the risk evaluation) would be based on the existing risk characterization section of the risk evaluation (section 4 of the risk evaluation) and would not involve additional technical or scientific analysis. The discussion of the issues presented in this **Federal Register** notice and in the accompanying draft revision to the risk determination would supersede any conflicting statements in the prior PCE risk evaluation and the response to comments document (Ref. 10). With respect to the PCE risk evaluation, EPA intends to change the risk determination to a whole chemical approach without considering the use of PPE and does not intend to amend, nor does a whole chemical approach require amending, the underlying scientific analysis of the risk evaluation in the risk characterization section of the risk evaluation. EPA views the peer reviewed hazard and exposure assessments and associated risk characterization as robust and upholding the standards of best available science and weight of the scientific evidence per TSCA sections 26(h) and (i).

EPA is announcing the availability of and seeking public comment on the draft superseding unreasonable risk determination for PCE, including a description of the risks driving the unreasonable risk determination under the conditions of use for the chemical substance as a whole. For purposes of TSCA section 6(i), EPA is making a draft risk determination on PCE as a whole chemical. Under the proposed revised approach, the ''whole chemical'' risk determination for PCE would supersede the no unreasonable risk determinations (and withdraw the associated order) for PCE that were premised on a condition-of-use-specific approach to determining unreasonable risk. When finalized, EPA's revised unreasonable risk

determination would also contain an order withdrawing the TSCA section 6(i)(1) order in section 5.4.1 of the December 2020 PCE risk evaluation.

C. What revision does EPA propose about the use of PPE for the PCE risk evaluation?

In the risk evaluations for the first ten chemical substances, as part of the unreasonable risk determination, EPA assumed for several conditions of use that all workers were provided and always used PPE in a manner that achieves the stated assigned protection factor (APF) for respiratory protection, or used impervious gloves for dermal protection. In support of this assumption, EPA considered reasonably available information such as public comments indicating that some employers, particularly in the industrial setting, provide PPE to their employees and follow established worker protection standards (*e.g.,* Occupational Safety and Health Administration (OSHA) requirements for protection of workers).

For the December 2020 PCE risk evaluation, EPA assumed based on reasonably available information that workers use PPE—specifically respirators with an APF ranging from 25 to 50 and gloves with PF 10 or 20—for 26 occupational conditions of use. However, in the December 2020 risk evaluation, EPA determined that there is unreasonable risk for 25 of those 26 occupational conditions of use even with assumed PPE.

EPA is revising the assumption for PCE that workers always or properly use PPE, although it does not question the public comments received regarding the occupational safety practices often followed by industry respondents. When characterizing the risk to human health from occupational exposures during risk evaluation under TSCA, EPA believes it is appropriate to evaluate the levels of risk present in baseline scenarios where PPE is not assumed to be used by workers. This approach of not assuming PPE use by workers considers the risk to potentially exposed or susceptible subpopulations (workers and occupational non-users) who may not be covered by OSHA standards, such as self-employed individuals and public sector workers who are not covered by a State Plan. It should be noted that, in some cases, baseline conditions may reflect certain mitigation measures, such as engineering controls, in instances where exposure estimates are based on monitoring data at facilities that have engineering controls in place.

In addition, EPA believes it is appropriate to evaluate the levels of risk present in scenarios considering applicable OSHA requirements (*e.g.,* chemical-specific permissible exposure limits (PELs) and/or chemical-specific PELs with additional substance-specific standards) as well as scenarios considering industry or sector best practices for industrial hygiene that are clearly articulated to the Agency. Consistent with this approach, the December 2020 PCE risk evaluation characterized risk to workers both with and without the use of PPE. By characterizing risks using scenarios that reflect different levels of mitigation, EPA risk evaluations can help inform potential risk management actions by providing information that could be used during risk management to tailor risk mitigation appropriately to address any unreasonable risk identified, or to ensure that applicable OSHA requirements or industry or sector best practices that address the unreasonable risk are required for all potentially exposed or susceptible subpopulations (including self-employed individuals and public sector workers who are not covered by an OSHA State Plan).

When undertaking unreasonable risk determinations as part of TSCA risk evaluations, however, EPA does not believe it is appropriate to assume as a general matter that an applicable OSHA requirement or industry practices related to PPE use is consistently and always properly applied. Mitigation scenarios included in the EPA risk evaluation (*e.g.,* scenarios considering use of various PPE) likely represent what is happening already in some facilities. However, the Agency cannot assume that all facilities have adopted these practices for the purposes of making the TSCA risk determination.

Therefore, EPA proposes to make a determination of unreasonable risk for PCE from a baseline scenario that does not assume compliance with OSHA standards, including any applicable exposure limits or requirements for use of respiratory protection or other PPE. Making unreasonable risk determinations based on the baseline scenario should not be viewed as an indication that EPA believes there are no occupational safety protections in place at any location, or that there is widespread non-compliance with applicable OSHA standards. Rather, it reflects EPA's recognition that unreasonable risk may exist for subpopulations of workers that may be highly exposed because they are not covered by OSHA standards, such as self-employed individuals and public sector workers who are not covered by a State Plan, or because their employer is out of compliance with OSHA standards, or because many of OSHA's chemical-specific permissible exposure limits largely adopted in the 1970's are described by OSHA as being ''outdated and inadequate for ensuring protection of worker health,'' (Ref. 11) or because EPA finds unreasonable risk for purposes of TSCA notwithstanding OSHA requirements.

In accordance with this approach, EPA is proposing the draft revision to the PCE risk determination without relying on assumptions regarding the occupational use of PPE in making the unreasonable risk determination under TSCA section 6; rather, information on the use of PPE as a means of mitigating risk (including information received from industry respondents about occupational safety practices in use) would be considered during the risk management phase as appropriate. This would represent a change from the approach taken in the 2020 risk evaluation for PCE and EPA invites comments on this draft change to the PCE risk determination. As a general matter, when undertaking risk management actions, EPA intends to strive for consistency with applicable OSHA requirements and industry best practices, including appropriate application of the hierarchy of controls, when those measures would address an identified unreasonable risk, including unreasonable risk to potentially exposed or susceptible subpopulations. Consistent with TSCA section 9(d), EPA will consult and coordinate TSCA activities with OSHA and other relevant Federal agencies for the purpose of achieving the maximum applicability of TSCA while avoiding the imposition of duplicative requirements. Informed by the mitigation scenarios and information gathered during the risk evaluation and risk management process, the Agency might propose rules that require risk management practices that may be already common practice in many or most facilities. Adopting clear, comprehensive regulatory standards will foster compliance across all facilities (ensuring a level playing field) and assure protections for all affected workers, especially in cases where current OSHA standards may not apply or be sufficient to address the unreasonable risk.

Removing the assumption that workers always and appropriately wear PPE in making the whole chemical risk determination for PCE would mean that: one condition of use in addition to the original 59 conditions of use would drive the unreasonable risk for PCE; an additional route of exposure (*i.e.,*

inhalation) would also be identified as driving the unreasonable risk to workers in many of those 59 conditions of use; and additional risks for acute non-cancer effects and cancer from inhalation and dermal exposures would also drive the unreasonable risk in many of those 59 conditions of use (where previously those conditions of use were identified as presenting unreasonable risk only for chronic non-cancer effects or for chronic non-cancer effects and cancer). The draft revision to the risk determination would clarify that EPA does not rely on the assumed use of PPE when making the risk determination for the whole substance. EPA is requesting comment on this potential change.

D. What is PCE?

PCE is a colorless liquid and a volatile organic compound that is manufactured (including imported), processed, distributed, used, and disposed of as part of industrial, commercial, and consumer conditions of use. PCE has a wide range of uses, including production of fluorinated compounds and as a solvent in dry cleaning and vapor degreasing. A variety of consumer and commercial products use PCE, such as adhesives (arts and crafts, as well as light repairs), aerosol degreasers, brake cleaners, aerosol lubricants, sealants, stone polish, stainless steel polish, and wipe cleaners. The total aggregate production volume reported for PCE under the Chemical Data Reporting rule ranged from 324 million to 388 million pounds between 2012 and 2015.

E. What conclusions did EPA reach about the risks of PCE in the 2020 TSCA risk evaluation and what conclusions is EPA proposing to reach based on the whole chemical approach and not assuming the use of PPE?

In the 2020 risk evaluation, EPA determined that PCE presents an unreasonable risk to health under the following conditions of use:

- Manufacturing (domestic manufacture);
- Manufacturing (import);
- Processing as a reactant/intermediate;
- Processing into formulation, mixture or reaction product for cleaning and degreasing products;
- Processing into formulation, mixture or reaction product for adhesive and sealant products;
- Processing into formulation, mixture or reaction product for paint and coating products;
- Processing into formulation, mixture or reaction product for other chemical products and preparations;
- Processing by repackaging;
- Recycling;
- Industrial and commercial use as solvent for open-top batch vapor degreasing;
- Industrial and commercial use as solvent for closed-loop batch vapor degreasing;
- Industrial and commercial use as solvent for in-line conveyorized vapor degreasing;
- Industrial and commercial use as solvent for in-line web cleaner vapor degreasing;
- Industrial and commercial use as solvent for cold cleaning;
- Industrial and commercial use as solvent for aerosol spray degreaser/cleaner;
- Industrial and commercial use as a solvent for aerosol lubricants;
- Industrial and commercial use in solvent-based adhesives and sealants;
- Industrial and commercial use in solvent-based paints and coatings;
- Industrial and commercial use in maskants for chemical milling;
- Industrial and commercial use as a processing aid in pesticide, fertilizer and other agricultural chemical manufacturing;
- Industrial and commercial use as a processing aid in catalyst regeneration in petrochemical manufacturing;
- Industrial and commercial use in wipe cleaning;
- Industrial and commercial use in other spot cleaning and spot removers, including carpet cleaning;
- Industrial and commercial use in mold release;
- Industrial and commercial use in dry cleaning and spot cleaning post-2006 dry cleaning;
- Industrial and commercial use in dry cleaning and spot cleaning 4th/5th gen only dry cleaning;
- Industrial and commercial use in automotive care products (*e.g.,* engine degreaser and brake cleaner);
- Industrial and commercial use in non-aerosol cleaner;
- Industrial and commercial use in metal (*e.g.,* stainless steel) and stone polishes;
- Industrial and commercial use in laboratory chemicals;
- Industrial and commercial use in welding;
- Industrial and commercial use in other textile processing;
- Industrial and commercial use in wood furniture manufacturing;
- Industrial and commercial use in foundry applications;
- Industrial and commercial use in specialty Department of Defense uses (oil analysis and water pipe repair);
- Commercial use in inks and ink removal products (based on printing);
- Commercial use in inks and ink removal products (based on photocopying);
- Commercial use for photographic film;
- Commercial use in mold cleaning, release and protectant products;
- Consumer use in cleaners and degreasers (other);
- Consumer use as a dry cleaning solvent;
- Consumer use in automotive care products (brake cleaner);
- Consumer use in automotive care products (parts cleaner);
- Consumer use in aerosol cleaner (vandalism mark and stain remover);
- Consumer use in non-aerosol cleaner (*e.g.,* marble and stone polish);
- Consumer use in lubricants and greases (cutting fluid);
- Consumer use in lubricants and greases (lubricants and penetrating oils);
- Consumer use in adhesives for arts and crafts (including industrial adhesive, arts and crafts adhesive, gun ammunition sealant);
- Consumer use in adhesives for arts and crafts (livestock grooming adhesive);
- Consumer use in adhesives for arts and crafts (column adhesive, caulk and sealant);
- Consumer use in solvent-based paints and coatings (outdoor water shield (liquid));
- Consumer use in solvent-based paints and coatings (coatings and primers (aerosol));
- Consumer use in solvent-based paints and coatings (rust primer and sealant (liquid));
- Consumer use in solvent-based paints and coatings (metallic overglaze);
- Consumer use in metal (*e.g.,* stainless steel) and stone polishes;
- Consumer use in inks and ink removal products;
- Consumer use in welding;
- Consumer use in mold cleaning, release and protectant products; and
- Disposal.

Under the proposed whole chemical approach to the PCE risk determination, the unreasonable risk from PCE would continue to be driven by risk from those same conditions of use. In addition, by removing the assumption of PPE use in making the whole chemical risk determination for PCE, one condition of use in addition to the original 59 conditions of use would drive the unreasonable risk: industrial and commercial use as a solvent for penetrating lubricants and cutting tool coolants. Overall, 60 conditions of use out of the 61 EPA evaluated would drive the PCE whole chemical unreasonable risk determination.

III. Revision of the December 2020 Risk Evaluation

A. Why is EPA proposing to revise the risk determination for the PCE risk evaluation?

EPA is proposing to revise the risk determination for the PCE risk evaluation pursuant to TSCA section 6(b) and consistent with Executive Order 13990, (''Protecting Public Health and the Environment and Restoring Science to Tackle the Climate Crisis'') and other Administration priorities (Refs. 3, 4, and 6). EPA is revising specific aspects of the first ten TSCA existing chemical risk evaluations in order to ensure that the risk evaluations better align with TSCA's objective of protecting health and the environment. For the PCE risk evaluation, this includes the draft revision: (1) Making the risk determination in this instance based on the whole chemical substance instead of by individual conditions of use, and (2) Emphasizing that EPA does not rely on the assumed use of PPE when making the risk determination.

B. What are the draft revisions?

EPA is releasing a draft revision of the risk determination for the PCE risk evaluation pursuant to TSCA section 6(b). Under the revised determination, EPA preliminarily concludes that PCE, as evaluated in the risk evaluation as a whole, presents an unreasonable risk of injury to health under its conditions of use. This revision would replace the previous unreasonable risk determinations made for PCE by individual conditions of use, supersede the determinations (and withdraw the associated order) of no unreasonable risk for the conditions of use identified in the TSCA section 6(i)(1) no unreasonable risk order, and clarify the lack of reliance on assumed use of PPE as part of the risk determination.

These draft revisions do not alter any of the underlying technical or scientific information that informs the risk characterization, and as such the hazard, exposure, and risk characterization sections are not changed except to the extent that statements about PPE assumptions in section 2.4.1.4 (Consideration of Engineering Controls and PPE) and section 4.2.2.2 (Occupational Inhalation Exposure Summary and PPE Use Determinations by OES) of the PCE risk evaluation would be superseded. The discussion of the issues in this notice and in the accompanying draft revision to the risk determination would supersede any conflicting statements in the prior executive summary, section 2.4.1.4 and section 4.2.2.2 from the PCE risk evaluation and the response to comments document (Refs. 2 and 10). Additional policy changes to other chemical risk evaluations, including any consideration of potentially exposed or susceptible subpopulations and/or inclusion of additional exposure pathways, are not necessarily reflected in these draft revisions to the risk determination.

C. Will the draft revised risk determination be peer reviewed?

The risk determination (section 5 in the December 2020 risk evaluation) was not part of the scope of the peer review of the PCE risk evaluation by the Science Advisory Committee on Chemicals (SACC). Thus, consistent with that approach, EPA does not intend to conduct peer review of the draft revised unreasonable risk determination for the PCE risk evaluation because no technical or scientific changes will be made to the hazard or exposure assessments or the risk characterization.

D. What are the next steps for finalizing revisions to the risk determination?

EPA will review and consider public comment received on the draft revised risk determination for the PCE risk evaluation and, after considering those public comments, issue the revised final PCE risk determination. If finalized as drafted, EPA would also issue a new order to withdraw the TSCA section 6(i)(1) no unreasonable risk order issued in Section 5.4.1 of the 2020 PCE risk evaluation. This final revised risk determination would supersede the December 2020 risk determinations of no unreasonable risk. Consistent with the statutory requirements of TSCA section 6(a), the Agency would then propose risk management actions to address the unreasonable risk determined in the PCE risk evaluation.

IV. References

The following is a listing of the documents that are specifically referenced in this document. The docket includes these documents and other information considered by EPA, including documents that are referenced within the documents that are included in the docket, even if the referenced document is not physically located in the docket. For assistance in locating these other documents, please consult the person listed under **FOR FURTHER INFORMATION CONTACT**.

1. EPA Draft Revised Unreasonable Risk Determination for Perchloroethylene, Section 5, June 2022.
2. EPA. Risk Evaluation for Perchloroethylene. EPA Document #740–R1–8011. December 2020. *https://www.regulations.gov/document/EPA-HQ-OPPT-2019-0502-0058.*
3. Executive Order 13990. Protecting Public Health and the Environment and Restoring Science to Tackle the Climate Crisis. **Federal Register**. 86 FR 7037, January 25, 2021.
4. Executive Order 13985. Advancing Racial Equity and Support for Underserved Communities Through the Federal Government. **Federal Register**. 86 FR 7009, January 25, 2021.
5. Executive Order 14008. Tackling the Climate Crisis at Home and Abroad. **Federal Register**. 86 FR 7619, February 1, 2021.
6. Presidential Memorandum. Memorandum on Restoring Trust in Government Through Scientific Integrity and Evidence-Based Policymaking. **Federal Register**. 86 FR 8845, February 10, 2021.
7. EPA Press Release. EPA Announces Path Forward for TSCA Chemical Risk Evaluations. June 2021. *https://www.epa.gov/newsreleases/epa-announces-path-forward-tsca-chemical-risk-evaluations.*
8. EPA. Proposed Rule; Procedures for Chemical Risk Evaluation Under the Amended Toxic Substances Control Act. **Federal Register**. 82 FR 7562, January 19, 2017 (FRL–9957–75).
9. EPA. Final Rule; Procedures for Chemical Risk Evaluation Under the Amended Toxic Substances Control Act. **Federal Register**. 82 FR 33726, July 20, 2017 (FRL–9964–38).
10. EPA. Summary of External Peer Review and Public Comments and Disposition for Perchloroethylene (PCE). December 2020. *https://www.regulations.gov/document/EPA-HQ-OPPT-2019-0502-0059.*
11. Occupational Safety and Health Administration. Permissible Exposure Limits—Annotated Tables. Accessed June 13, 2022. *https://www.osha.gov/annotated-pels.*

Authority: 15 U.S.C. 2601 *et seq.*

Dated: June 27, 2022.

Michal Freedhoff,

Assistant Administrator, Office of Chemical Safety and Pollution Prevention.

[FR Doc. 2022–14016 Filed 6–29–22; 8:45 am]

BILLING CODE 6560–50–P

ENVIRONMENTAL PROTECTION AGENCY

[EPA–R10–OW–2022–0418; FRL–9860–02–R10]

Proposed Determination To Prohibit and Restrict the Use of Certain Waters Within Defined Areas as Disposal Sites; Pebble Deposit Area, Southwest Alaska; Extension of Comment Period

AGENCY: Environmental Protection Agency (EPA).

ACTION: Notice of extension of public comment period and public hearing comment period.

SUMMARY: The Environmental Protection Agency (EPA) is extending the public comment period for its 2022 Proposed Determination to Prohibit and Restrict the Use of Certain Waters Within Defined Areas as Disposal Sites; Pebble Deposit Area, Southwest Alaska issued pursuant to Section 404(c) of the Clean Water Act (CWA). Notice of availability and notice of public hearing were published in the **Federal Register** on May 26, 2022. The notice provided that the public comment period would remain open through July 5, 2022. The public comment period for the 2022 Proposed Determination and the post hearing comment period are hereby extended through September 6, 2022.

DATES: The comment period for the 2022 Proposed Determination published May 26, 2022 (87 FR 32021) is extended. Written comments on the 2022 Proposed Determination must be received on or before September 6, 2022.

ADDRESSES:

I. How to Obtain a Copy of the Proposed Determination: The proposed determination is available primarily via the internet on the EPA Region 10 Bristol Bay site at *www.epa.gov/bristolbay.*

II. How to Submit Comments to the Docket at www.regulations.gov:

Submit your comments, identified by Docket ID No. EPA–R10–OW–2022–0418, by one of the following methods:

Federal eRulemaking Portal (recommended method of comment submission): Follow the online instructions at *http://www.regulations.gov* for submitting comments.

Email: ow-docket@epa.gov. Include the docket number EPA–R10–OW–2022–0418 in the subject line of the message.

Mail and Hand Delivery/Courier: Send your original comments and three copies to: Water Docket, Environmental Protection Agency, Mail Code 2822T, 1200 Pennsylvania Avenue NW, Washington, DC 20460, Attention: Docket ID No. EPA–R10–OW–2022–0418.

Hand Delivery/Courier: Deliver your comments to EPA Docket Center, EPA West, Room 3334, 1301 Constitution Avenue NW, Washington, DC 20460, Attention: Docket ID No. EPA–R10–OW–2022–0418. Such deliveries are accepted only during the Docket's normal hours of operation, 8:30 a.m. to 4:30 p.m. ET, Monday through Friday (excluding legal holidays). Special arrangements should be made for deliveries of boxed information. The telephone number for the Water Docket is (202) 566–2426.

Instructions: EPA's policy is that all comments received will be included in the public docket without change and will be made available online at *http://www.regulations.gov,* including any personal information provided, unless the comment includes information claimed to be Confidential Business Information (CBI) or other information disclosure of which is restricted by statute. Do not submit information that you consider to be CBI or otherwise protected information through *http://www.regulations.gov* or email. The *http://www.regulations.gov* website is an ''anonymous access'' system, which means EPA will not know your identity or contact information unless you provide it in the body of your comment. If you send an email comment directly to EPA without going through *http://www.regulations.gov,* your email address will be captured automatically and included as part of the comment that is placed in the public docket and made publicly available on the internet. Multimedia submissions (audio, video, etc.) must be accompanied by a written comment. The written comment is considered the official comment and should include discussion of all points you wish to make. EPA will generally not consider comments or comment contents located outside of the primary submission (*i.e.,* on the web, cloud, or other file sharing system). For additional submission methods, the full EPA public comment policy, information about CBI or multimedia submissions, and general guidance on making effective comments, please visit *https://www.epa.gov/dockets/commenting-epa-dockets.*

FOR FURTHER INFORMATION CONTACT: For information on the public comment period, contact the Water Docket; telephone: (202) 566–2426 or email: *owdocket@epa.gov.* For information concerning the proposed determination, contact Erin Seyfried; telephone (206) 553–0040 or email: *r10bristolbay@epa.gov.* For more information about EPA's efforts in Bristol Bay, copies of the Section 404(c) proposed determination, see *http://www.epa.gov/bristolbay.*

SUPPLEMENTARY INFORMATION: EPA Region 10 has received several communications regarding an extension of the comment period, including requests to extend the comment period by 60 days and 120 days. EPA Region 10 also received requests not to extend the public comment period. EPA Region 10 has considered each of these requests and finds that good cause exists pursuant to 40 CFR 231.8 to extend the public comment period through September 6, 2022 to provide sufficient time for all parties to meaningfully comment on the 2022 Proposed Determination and supporting documents.

Casey Sixkiller,

Regional Administrator, Region 10.

[FR Doc. 2022–13986 Filed 6–29–22; 8:45 am]

BILLING CODE 6560–50–P

ENVIRONMENTAL PROTECTION AGENCY

[R01–OW–2022; FRL–9918–01–R1]

Program Requirement Revisions Related to the Public Water System Supervision Program for the State of Connecticut

AGENCY: Environmental Protection Agency (EPA).

ACTION: Notice.

SUMMARY: Notice is hereby given that the State of Connecticut is revising its approved Public Water System Supervision (PWSS) program to meet the requirements of the Safe Drinking Water Act (SDWA).

DATES: All interested parties may request a public hearing for any of the above EPA determinations. A request for a public hearing must be submitted by July 29, 2022 to the Regional Administrator at the address shown below. Frivolous or insubstantial requests for a hearing may be denied by the Regional Administrator.

However, if a substantial request for a public hearing is made by this date, a public hearing will be held. If no timely and appropriate request for a hearing is received, and the Regional Administrator does not elect to hold a hearing on his own motion, this determination shall become final and effective July 29, 2022.

Any request for a public hearing shall include the following information: (1) the name, address, and telephone number of the individual organization, or other entity requesting a hearing; (2) a brief statement of the requesting person's interest in the Regional Administrator's determination; (3) information that the requesting person intends to submit at such hearing; and (4) the signature of the individual making the request, or if the request is made on behalf of an organization or other entity, the signature of a responsible official of the organization or other entity.

ADDRESSES: All documents relating to this determination are available for

inspection between the hours of 8:30 a.m. and 4:00 p.m. Monday through Friday, at the following office(s) below. Please call to arrange a visit.

U.S. Environmental Protection Agency, Water Division, 5 Post Office Square, Suite 100, Boston, MA 02109–3912.

For state-specific documents:

Connecticut Department of Public Health, Drinking Water Section, 410 Capital Avenue, Hartford, CT 06134

FOR FURTHER INFORMATION CONTACT: Stafford Madison, U.S. EPA-New England, Water Division, telephone (617) 918–1622.

SUPPLEMENTARY INFORMATION: The State of Connecticut has adopted drinking water regulations for the Arsenic Rule (66 FR 6976) promulgated on January 22, 2001, Ground Water Rule (71 FR 65574) promulgated on November 8, 2006, and Public Notification Rule (65 FR 25982) promulgated on May 4, 2000. After review of documentation submitted by the State, the Environmental Protection Agency (EPA) has determined that the State's rules are no less stringent than the corresponding federal regulations. EPA, therefore, intends to approve the state's PWSS program revision for these three rules.

Authority: Section 1401 (42 U.S.C 300f) and Section 1413 (42 U.S.C 300g–2) of the Safe Drinking Water Act, as amended (1996), and (40 CFR 142.10) of the National Primary Drinking Water Regulations.

Dated: June 24, 2022.

David W. Cash,

Regional Administrator, EPA Region 1—New England.

[FR Doc. 2022–14020 Filed 6–29–22; 8:45 am]

BILLING CODE 6560–50–P

FEDERAL COMMUNICATIONS COMMISSION

[OMB 3060–00316, OMB 3060–0750 and OMB 3060–0754; FR ID 93496]

Information Collections Being Reviewed by the Federal Communications Commission

AGENCY: Federal Communications Commission.

ACTION: Notice and request for comments.

SUMMARY: As part of its continuing effort to reduce paperwork burdens, and as required by the Paperwork Reduction Act of 1995 (PRA), the Federal Communications Commission (FCC or Commission) invites the general public and other Federal agencies to take this opportunity to comment on the following information collection. Comments are requested concerning: whether the proposed collection of information is necessary for the proper performance of the functions of the Commission, including whether the information shall have practical utility; the accuracy of the Commission's burden estimate; ways to enhance the quality, utility, and clarity of the information collected; ways to minimize the burden of the collection of information on the respondents, including the use of automated collection techniques or other forms of information technology; and ways to further reduce the information collection burden on small business concerns with fewer than 25 employees. The FCC may not conduct or sponsor a collection of information unless it displays a currently valid Office of Management and Budget (OMB) control number. No person shall be subject to any penalty for failing to comply with a collection of information subject to the PRA that does not display a valid OMB control number.

DATES: Written PRA comments should be submitted on or before August 29, 2022. If you anticipate that you will be submitting comments but find it difficult to do so within the period of time allowed by this notice, you should advise the contact listed below as soon as possible.

ADDRESSES: Direct all PRA comments to Cathy Williams, FCC, via email to *PRA@fcc.gov* and to *Cathy.Williams@fcc.gov.*

FOR FURTHER INFORMATION CONTACT: For additional information about the information collection, contact Cathy Williams at (202) 418–2918.

SUPPLEMENTARY INFORMATION:

OMB Control Number: 3060–0316.

Title: 47 CFR 76.5, Definitions, 76.1700, Records to Be Maintained Locally by Cable System Operators; 76.1702, Equal Employment Opportunity; 76.1703, Commercial Records on Children's Programs; 76.1707, Leased Access; 76.1711, Emergency Alert System (EAS) Tests and Activation.

Form Number: N/A.

Type of Review: Extension of a currently approved collection.

Respondents: Business or other for-profit entities.

Number of Respondents and Responses: 3,000 respondents; 3,000 responses.

Estimated Time per Response: 14 hours.

Frequency of Response: Recordkeeping requirements.

Obligation to Respond: Required to obtain or retain benefits. The statutory authority for this information collection is contained in sections 151, 152, 153, 154, 301, 302, 302a, 303, 303a, 307, 308, 309, 312, 315, 317, 325, 339, 340, 341, 503, 521, 522, 531, 532, 534, 535, 536, 537, 543, 544, 544a, 545, 548, 549, 552, 554, 556, 558, 560, 561, 571, 572, 573 of the Communications Act of 1934, as amended.

Total Annual Burden: 42,000 hours.

Total Annual Cost: None.

Needs and Uses: The Commission is seeking Office of Management and Budget (OMB) approval for the extension of a currently approved collection. The information collection requirements for this information collection are as follows: 47 CFR 76.1700 requires cable system operators to place the public inspection file materials required to be retained by the following rules in the online public file hosted by the Commission, with the exception of existing political file material which cable systems may continue to retain in their local public file until the end of the retention period: Sections 76.1701 (political file), 76.1702 (EEO), 76.1703 (commercial records for children's programming), 76.1705 (performance tests—channels delivered); 76.1707 (leased access); and 76.1709 (availability of signals), 76.1710 (operator interests in video programming), 76.1715 (sponsorship identification), and 76.630 (compatibility with consumer electronics equipment. Cable systems with fewer than 5,000 subscribers may continue to retain their political file locally and are not required to upload new political file material to the online public file until March 1, 2018. In addition, cable systems may elect to retain the material required by Section 76.1708 (principal headend) locally rather than placing this material in the online public file.

47 CFR 76.1700(b) requires cable system operators to make the records required to be retained by the following rules available to local franchising authorities: Sections 76.1704 (proof-of-performance test data) and 76.1713 (complaint resolution).

47 CFR 76.1700(c) requires cable system operators to make the records required to be retained by the following rules available to the Commission: Sections 76.1704 (proof-of-performance test data), 76.1706 (signal leakage logs and repair records), 76.1711 (emergency alert system and activations), 76.1713 (complaint resolution), and 76.1716 (subscriber records).

47 CFR 76.1700(d) exempts cable television systems having fewer than

1,000 subscribers from the online public file and the public inspection requirements contained in 47 CFR 76.1701 (political file); 76.1702 (equal employment opportunity); 76.1703 (commercial records for children's programming); 76.1704 (proof-of-performance test data); 76.1706 (signal leakage logs and repair records); and 76.1715 (sponsorship identifications).

47 CFR 76.1700(e) requires that public file material that continues to be retained at the system be retained in a public inspection file maintained at the office which the system operator maintains for the ordinary collection of subscriber charges, resolution of subscriber complaints, and other business or at any accessible place in the community served by the system unit(s) (such as a public registry for documents or an attorney's office). Public files must be available for public inspection during regular business hours.

47 CFR 76.1700(f) requires cable systems to provide a link to the public inspection file hosted on the Commission's website from the home page of its own website, if the system has a website, and provide contact information on its website for a system representative who can assist any person with disabilities with issues related to the content of the public files. A system also is required to include in the online public file the address of the system's local public file, if the system retains documents in the local file that are not available in the Commission's online file, and the name, phone number, and email address of the system's designated contact for questions about the public file. In addition, a system must provide on the online public file a list of the five digit ZIP codes served by the system.

47 CFR 76.1700(g) requires that cable operators make any material in the public inspection file that is not also available in the Commission's online file available for machine reproduction upon request made in person, provided the requesting party shall pay the reasonable cost of reproduction. Requests for machine copies must be fulfilled at a location specified by the system operator, within a reasonable period of time, which in no event shall be longer than seven days. The system operator is not required to honor requests made by mail but may do so if it chooses.

47 CFR 76.1702(a) requires that every employment unit with six or more full-time employees shall maintain for public inspection a file containing copies of all EEO program annual reports filed with the Commission and the equal employment opportunity program information described in 47 CFR 76.1702(b). These materials shall be placed in the Commission's online public inspection file for each cable system associated with the employment unit. These materials must be placed in the Commission's online public inspection file annually by the date that the unit's EEO program annual report is due to be filed and shall be retained for a period of five years. A headquarters employment unit file and a file containing a consolidated set of all documents pertaining to the other employment units of a multichannel video programming distributor that operates multiple units shall be maintained in the Commission's online public file for every cable system associated with the headquarters employment unit.

47 CFR 76.1702(b) requires that the following equal employment opportunity program information shall be included annually in the unit's public file, and on the unit's website, if it has one, at the time of the filing of its FCC Form 396–C: (1) A list of all full-time vacancies filled by the multichannel video programming distributor employment unit during the preceding year, identified by job title; (2) For each such vacancy, the recruitment source(s) utilized to fill the vacancy (including, if applicable, organizations entitled to notification, which should be separately identified), identified by name, address, contact person and telephone number; (3) The recruitment source that referred the hiree for each full-time vacancy during the preceding year; (4) Data reflecting the total number of persons interviewed for full-time vacancies during the preceding year and the total number of interviewees referred by each recruitment source utilized in connection with such vacancies; and (5) A list and brief description of the initiatives undertaken during the preceding year, if applicable.

47 CFR 76.1703 requires that cable operations airing children's programming must maintain records sufficient to verify compliance with 47 CFR 76.225 and make such records available to the public. Such records must be maintained for a period sufficient to cover the limitation period specified in 47 U.S.C. 503(b)(6)(B). Cable television operators must file their certifications of compliance with the commercial limits in children's programming annually within 30 days after the end of the calendar year.

47 CFR 76.1707 requires that if a cable operator adopts and enforces a written policy regarding indecent leased access programming pursuant to § 76.701, such a policy will be considered published pursuant to that rule by inclusion of the written policy in the operator's public inspection file.

47 CFR 76.1711 requires that records be kept of each test and activation of the Emergency Alert System (EAS) procedures pursuant to the requirement of 47 CFR part 11 and the EAS Operating Handbook. These records shall be kept for three years.

47 CFR 76.5 describes certain terms covered in the cable industry.

OMB Control Number: 3060–0750.

Title: 47 CFR 73.671, Educational and Informational Programming for Children; 47 CFR 73.673, Public Information Initiatives Regarding Educational and informational Programming for Children.

Form Number: N/A.

Type of Review: Extension of a currently approved collection.

Respondents: Business or other for-profit entities.

Number of Respondents and Responses: 1,756 respondents; 1,116,816 responses.

Estimated Time per Response: 0.017–0.084 hours.

Frequency of Response: Third-party disclosure requirements.

Obligation to Respond: Required to obtain or retain benefits. The statutory authority for this collection is contained in Sections 154(i), 303, and 336 of the Communications Act of 1934, as amended.

Total Annual Burden: 57,105 hours.

Total Annual Cost: None.

Needs and Uses: The Commission is seeking Office of Management and Budget (OMB) approval for the extension of a currently approved collection. The information collection requirements for this information collection are as follows:

Pursuant to 47 CFR 73.671(c)(5), each commercial television broadcast station must identify programming as specifically designed to educate and inform children by the display on the television screen throughout the program of the symbol E/I. This requirement is intended to assist parents in identifying educational and informational programming for their children. Noncommercial television broadcast stations are no longer required to identify Core Programming by displaying the E/I symbol throughout the program.

Pursuant to 47 CFR 73.671(e), each television broadcast station that preempts an episode of a regularly scheduled weekly Core Program on its primary stream will be permitted to

count the episode toward the Core Programming processing guidelines if it reschedules the episode on its primary stream in accordance with the requirements of 47 CFR 73.671(e). Similarly, each television broadcast station that preempts an episode of a regularly scheduled weekly Core Program on a multicast stream will be permitted to count the episode toward the Core Programming processing guidelines if it reschedules the episode on the multicast stream in accordance with the requirements of 47 CFR 73.671(e). Among other requirements, the station must make an on-air notification of the schedule change during the same time slot as the preempted episode. The on-air notification must include the alternate date and time when the program will air.

Pursuant to 47 CFR 73.673, each commercial television broadcast station licensee must provide information identifying programming specifically designed to educate and inform children to publishers of program guides. This requirement is intended to improve the information available to parents regarding programming specifically designed for children's educational and informational needs. Commercial television broadcast station licensees are no longer required to provide program guide publishers an indication of the age group for which the programming is intended.

OMB Control Number: 3060–0754.

Title: FCC Form 2100, Application for Media Bureau Audio and Video Service Authorization, Schedule H.

Form Number: FCC Form 2100, Schedule H.

Type of Review: Extension of a currently approved collection.

Respondents: Business or other for profit entities.

Number of Respondents: 1,756 respondents; 1,756 responses.

Estimated Time per Response: 10 hours.

Frequency of Response: Recordkeeping requirement: Annual reporting requirement.

Obligation to Respond: Required to obtain or retain benefits. Statutory authority for this collection of information is contained in Sections 154(i) and 303 of the Communications Act of 1934, as amended.

Total Annual Burden: 17,560 hours.

Total Annual Cost: $1,053,600.

Needs and Uses: The Commission is seeking Office of Management and Budget (OMB) approval for the extension of a currently approved collection. Commercial full-power and Class A television broadcast stations are required to file FCC Form 2100, Schedule H (formerly FCC Form 398) (Children's Television Programming Report) within 30 days after the end of each calendar year. FCC Form 2100, Schedule H is a standardized form that: (a) Provides a consistent format for reporting the children's educational television programming aired by licensees to meet their obligation under the Children's Television Act of 1990 (CTA), and (b) facilitates efforts by the public and the FCC to monitor compliance with the CTA.

Commercial full-power and Class A television stations are required to complete FCC Form 2100, Schedule H within 30 days after the end of each calendar year and file the form with the Commission. The Commission places the form in the station's online public inspection file maintained on the Commission's database (*www.fcc.gov*). Stations use FCC Form 2100, Schedule H to report, among other things, the Core Programming (*i.e.,* children's educational and informational programming) the station aired the previous calendar year. FCC Form 2100, Schedule H also includes a ''Preemption Report'' that must be completed for each Core Program that was preempted during the year. This ''Preemption Report'' requests information on the reason for the preemption, the date of each preemption, the reason for the preemption and, if the program was rescheduled, the date and time the program was re-aired.

Federal Communications Commission.

Marlene Dortch,

Secretary, Office of the Secretary.

[FR Doc. 2022–13953 Filed 6–29–22; 8:45 am]

BILLING CODE 6712–01–P

GENERAL SERVICES ADMINISTRATION

[OMB Control No. 3090–XXXX; Docket No. 2022–0001; Sequence No. 12]

Information Collection; Generic Clearance for the Collection of the Mission-Support Customer Satisfaction Survey

AGENCY: Office of Shared Services and Performance Improvement, Office of Government-wide Policy, General Services Administration (GSA).

ACTION: Notice of request for comments regarding a new request for an OMB clearance.

SUMMARY: GSA is coordinating the development of the following proposed Generic Information Collection Request (Generic ICR): ''Generic Clearance for the Collection of the Mission-Support Customer Satisfaction Survey'' for approval under the Paperwork Reduction Act. This notice announces that GSA intends to submit this new collection to the Office of Management and Budget (OMB) for approval and will solicit comments on specific aspects for the proposed information collection.

DATES: Submit comments on or before August 29, 2022.

ADDRESSES: Submit comments identified by information collection ''3090–XXXX Generic Clearance for the Collection of the Mission-Support Customer Satisfaction Survey'' to *http://www.regulations.gov.*

Submit comments via the Federal eRulemaking portal by searching for ''3090–XXXX Generic Clearance for the Collection of the Mission-Support Customer Satisfaction Survey''. Select the link ''Comment'' that corresponds with ''3090–XXXX Generic Clearance for the Collection of the Mission-Support Customer Satisfaction Survey''. Follow the instructions provided on the screen. Please include your name, company name (if any), and ''3090–XXXX Generic Clearance for the Collection of the Mission-Support Customer Satisfaction Survey'' on your attached document. If your comment cannot be submitted using *regulations.gov,* call or email the points of contact in the **FOR FURTHER INFORMATION CONTACT** section of this document for alternate instructions.

Instructions: Please submit comments only and cite ''Information Collection 3090–XXXX Generic Clearance for the Collection of the Mission-Support Customer Satisfaction Survey'' in all correspondence related to this collection. Comments received generally will be posted without change to *http://www.regulations.gov,* including any personal and/or business confidential information provided. To confirm receipt of your comment(s), please check *www.regulations.gov,* approximately two-to-three days after submission to verify posting.

FOR FURTHER INFORMATION CONTACT: Trey Bradley, Program Director, Strategic Data Initiatives, Organization, at telephone 202–716–6410 or via email to *trey.bradley@gsa.gov.*

SUPPLEMENTARY INFORMATION:

A. Purpose

The Mission-Support Customer Satisfaction Survey (CSS) is an annual survey led by the Office of Management and Budget (OMB) and managed by the General Services Administration (GSA). The CSS began in 2015 as part of the

Obama Administration's President's Management Agenda (PMA).

The CSS asks federal employees to rate how satisfied they are with mission-support functions and services, how important specific mission-support services are to achieving mission outcomes, and whether a function serves as an effective strategic partner. Employees are asked to rate their perception of satisfaction, importance, and strategic partnership for 24 service areas on a seven-point Likert Scale within the following four support functions (functions are in bold):

Contracting: Pre-Award Activities; Contract Administration; Purchase Card Management.

Finance: Budget Formulation; Budget Execution; Financial Management Information & Analysis; Bill Payments; Bill Collections; Financial Risk Management.

Human Capital: Recruiting & Hiring; Training & Development; Work/Life Support; Employee Relations; Labor Relations; Performance & Recognition Management; Workforce Planning & Succession; Time & Attendance Management; Benefits Management; Retirement Planning & Processing.

Information Technology: IT Support; IT Communications & Collaboration; IT Equipment; Operations & Maintenance (O&M); Development, Modernization & Enhancement (DM&E).

The CSS is an annual, non-mandatory survey typically sent in early spring to all federal civilian employees at the 24 CFO Act Agencies.

The survey is distributed through email and responses are collected through an online survey platform. Each email sent contains a unique link to take the survey. Email contacts are obtained through the Office of Personnel Management's (OPM) Enterprise Human Resources Integration-Statistical Data Mart (EHRI–SDM). The EHRI–SDM is an information system that supports statistical analyses of federal personnel management programs. Agencies submit data from their personnel systems to the EHRI–SDM.

Agencies may choose to supplement or edit the EHRI–SDM email list for the purposes of this survey.

Survey reminders are sent once per week to those who have not yet taken the survey starting 7 days after the initial launch date until the closing of the survey. The survey is typically open for 6 to 8 weeks.

Individual survey responses are tracked for completeness so that reminders are sent only to those who have not yet taken the survey.

This is a confidential survey. To prevent identification of individual respondents, average satisfaction scores are excluded where the number of responses is fewer than 10. Once the survey is closed, all personal identifiable information (PII) is stripped from the data to protect privacy.

Survey participants only answered questions related to functions or services they had interaction within the previous year.

The response rate from year to year is approximately 20%.

Survey participants are allowed to opt out or choose not to take the survey.

The CSS is 508 compliant.

The CSS data is used by the Federal Government for three primary reasons:

- To provide a significant measure for quality of service provided, so that agencies can evaluate functional performance on quality as well as cost.
- To allow agencies to compare their performance to other agencies at the agency and bureau level.
- To provide the center of government a valuable data set to analyze and provide actionable insights for mission-support performance improvement.

Here are other specifics around how we plan to share the data:

- The items and the results of the items will be made publicly available for Federal agencies to assess their scores to identify areas for improvement;
- The general public, including researchers and the media, will also have access to this information;
- The collections are voluntary;
- Access to completed surveys will be limited to GSA and contractors who are involved in collecting and/or preparing the information for further analysis at OMB and distribution to other agencies:
- Information is only shared for the for the whole population and for certain subgroups. Neither federal agencies nor the public will receive data by subgroups that could be used to identify a specific individual or a person's specific response to a survey question.

The Agency has established a manager/managing entity to serve for this generic clearance and will conduct an independent review of each information collection to ensure compliance with the terms of this clearance prior to submitting each collection to OMB.

B. Annual Reporting Burden

Respondents: 300,100.

Responses per Respondent: 1.

Total Annual Responses: 1.

Hours per Response: 0.093(338 seconds).

Total Burden Hours: 28,176.06.

C. Public Comments

GSA invites comment on: whether this collection of information is necessary, whether it will have practical utility; whether our estimate of the public burden of this collection of information is accurate, and based on valid assumptions and methodology; ways to enhance the quality, utility, and clarity of the information to be collected; and ways in which we can minimize the burden of the collection of information on those who are to respond, through the use of appropriate technological collection techniques or other forms of information technology.

Obtaining Copies of Proposals: Requesters may obtain a copy of the information collection documents from the Regulatory Secretariat Division by calling 202–501–4755 or emailing *GSARegSec@gsa.gov.* Please cite OMB Control No. ''3090–XXXX Generic Clearance for the Collection of the Mission-Support Customer Satisfaction Survey'' in all correspondence.

Beth Anne Killoran,

Deputy Chief Information Officer.

[FR Doc. 2022–13989 Filed 6–29–22; 8:45 am]

BILLING CODE 6820–14–P

GENERAL SERVICES ADMINISTRATION

[OMB Control No. 3090–XXXX; Docket No. 2022–0001; Sequence No. 11]

Information Collection; Generic Clearance for the Collection of the Government-Wide Pulse Survey

AGENCY: Office of Shared Services and Performance Improvement, Office of Government-Wide Policy, General Services Administration (GSA).

ACTION: Notice of request for comments regarding a new request for an OMB clearance.

SUMMARY: GSA is coordinating the development of the following proposed Generic Information Collection Request (Generic ICR): ''Generic Clearance for the Collection of the Government-wide Pulse Survey'' for approval under the Paperwork Reduction Act. This notice announces that GSA intends to submit this new collection to the Office of Management and Budget (OMB) for approval and will solicit comments on specific aspects for the proposed information collection.

DATES: Submit comments on or before August 29, 2022.

ADDRESSES: Submit comments identified by ''Information Collection 3090–XXXX Generic Clearance for the

Collection of the Government-wide Pulse Survey'' to *http://www.regulations.gov.*

Submit comments via the Federal eRulemaking portal by searching for ''3090–XXXX Generic Clearance for the Collection of the Government-wide Pulse Survey''. Select the link ''Comment'' that corresponds with ''3090–XXXX Generic Clearance for the Collection of the Government-wide Pulse Survey''. Follow the instructions provided on the screen. Please include your name, company name (if any), and ''3090–XXXX Generic Clearance for the Collection of the Government-wide Pulse Survey'' on your attached document. If your comment cannot be submitted using *regulations.gov,* call or email the points of contact in the **FOR FURTHER INFORMATION CONTACT** section of this document for alternate instructions.

Instructions: Please submit comments only and cite ''Information Collection 3090–XXXX Generic Clearance for the Collection of the Government-wide Pulse Survey'', in all correspondence related to this collection. Comments received generally will be posted without change to *http://www.regulations.gov,* including any personal and/or business confidential information provided. To confirm receipt of your comment(s), please check *www.regulations.gov,* approximately two-to- three days after submission to verify posting.

FOR FURTHER INFORMATION CONTACT: Trey Bradley, Program Director, Strategic Data Initiatives, Organization, at telephone 202–716–6410 or via email to *trey.bradley@gsa.gov.*

SUPPLEMENTARY INFORMATION:

A. Purpose

GSA's Office of Shared Solutions and Performance Improvement (OSSPI) improves mission delivery and implementation of the Administration's priorities by bringing the government together to drive innovation, foster collaboration, and shape effective policy. Working through its three functional areas of Executive Council management, Shared Services, and the President's Management Agenda (PMA) team, OSSPI's vision is to be a trusted partner delivering on the Administration priorities by unifying the government as one Federal enterprise.

Because of our PMA responsibilities, GSA played a key role in FY2022 governmentwide pilot managing a series of Pulse surveys—described in greater detail below.

As the Federal workforce adjusts to the post-Pandemic environment, we have a unique, time-sensitive moment to rigorously learn about what enables Federal employees to thrive—informing our strategy for decades to come on the future of work.

Better understanding what employees need to do their job and supporting them in this can result in improved mission delivery and experience of our customers, a fundamental principle the private sector has believed in for decades. A central management survey approach and service will provide information to improve Federal employee experience and mission delivery.

Pulse surveys also provide a much faster turnaround time for the analysis of government-wide survey data—making data available for decision making within weeks (or even days), not months, of survey implementation to deliver more actionable information. In addition, these Pulses are short, discrete surveys, minimizing burden on Federal respondents.

Given the large scale of the planned pulse surveys, we can build a ''test and learn'' approach to these pulses. For example, in the pilot we used A/B testing to see whether different framing or the ''sent from'' branding affects response rates and answers.

As the effort moves into its second year, the data will be an important source of information for the PMA and the Government-Wide Learning Agenda and will identify government-wide issues and priorities and support agency action planning.

Thought leadership for this effort will be provided by OMB, OPM, GSA, and the Harvard University's People Lab. The work will be executed by OSSPI staff and colleagues in GSA's Office of Evidence and Analysis, supplemented by contractor support.

We plan to continue the Pulse initiative that began as a government-wide pilot in FY2022. These ''pulse'' surveys are short surveys asked at regular cadence to enable comparison and in collaboration with the 24 CFO Act Agencies to generate actionable data within a short turnaround time on some timely, cross-cutting questions. We will conduct a series of pulses with both trended and unique questions. Some of the unique questions, as indicated above, will be designed for A/B testing.

These questions will be related to the President's Management Agenda or the Government-Wide Learning Agenda. For example, during the pilot, questions covered three themes:

(1) Employee engagement (presenting questions that are highly predictive of turnover and burnout)
(2) Reentry (understanding expectations and concerns about the return to office plans)
(3) Equity and inclusion (including understanding current support systems and pain points)

Here are other specifics around how we plan to share the data:

- The items and the results of the items will be made publicly available for Federal agencies to assess their scores to identify areas for improvement;
- The general public, including researchers and the media, will also have access to this information;
- The collections are voluntary;
- Access to completed surveys will be limited to GSA and OPM staff and contractors who are involved in collecting and/or preparing the information for further analysis at OMB and distribution to other agencies:
- Information is only shared for the for the whole population and for certain subgroups. Neither federal agencies nor the public will receive data by subgroups that could be used to identify a specific individual or a person's specific response to a survey question.

The Agency has established a manager/managing entity to serve for this generic clearance and will conduct an independent review of each information collection to ensure compliance with the terms of this clearance prior to submitting each collection to OMB.

Survey information will be collected through web surveys. The survey population is civilian federal employees of the CFO Act Agencies. The survey is voluntary.

The government-wide Pulse surveys occupy an important niche for Federal data collection efforts. They are distinct from the other government-wide survey efforts, which are typically multi-year efforts with fixed content. Pulse surveys are more agile with questions that can be tailored to issues relevant to the PMA and the Government-wide Learning Agenda and evolve based on conditions on the ground. Moreover, to our knowledge, none of the CFO Act Agencies are currently conducting Pulse surveys to inform agency learning agendas, so the Pulse represents an important source of information for them. The pulse can also act as an early warning signal on critical issues (*e.g.,* reentry, diversity, burnout).

This survey only applies to the CFO Act Agencies. Moreover, the Pulse surveys are short (approximately three or four questions) and consist of three pulses conducted throughout the fiscal year.

Without pulse surveys, it will be difficult to measure changes employee sentiment on critical PMA issues in a short time frame. Having three pulses allows us to trend questions as conditions change.

Technical experts will review and approve the survey content.

Some questions may be asked that are of a personal or sensitive nature (*e.g.,* questions on Diversity, Equity, Inclusion, and Accessibility).

B. Annual Reporting Burden

Respondents: 367,000.
Responses Per Respondent: 1.
Total Annual Responses: 3.
Hours per Response: 0.0106 (38 seconds).
Total Burden Hours: 11,621.67.

C. Public Comments

GSA invites comments on: whether this collection of information is necessary, whether it will have practical utility; whether our estimate of the public burden of this collection of information is accurate, and based on valid assumptions and methodology; ways to enhance the quality, utility, and clarity of the information to be collected; and ways in which we can minimize the burden of the collection of information on those who are to respond, through the use of appropriate technological collection techniques or other forms of information technology.

Obtaining Copies of Proposals: Requesters may obtain a copy of the information collection documents from the Regulatory Secretariat Division by calling 202–501–4755 or emailing *GSARegSec@gsa.gov.* Please cite OMB Control No. ''3090–XXXX Generic Clearance for the Collection of the Government-wide Pulse Survey'' in all correspondence.

Beth Anne Killoran,
Deputy Chief Information Officer.

[FR Doc. 2022–13988 Filed 6–29–22; 8:45 am]
BILLING CODE 6820–14–P

DEPARTMENT OF HEALTH AND HUMAN SERVICES

Administration for Children and Families

Proposed Information Collection Activity; Sexual Risk Avoidance Education Performance Analysis Study—Extension (Office of Management and Budget (OMB) #0970–0536)

AGENCY: Office of Planning, Research, and Evaluation (OPRE), Administration for Children and Families (ACF), U.S. Department of Health and Human Services (HHS).

ACTION: Request for public comment.

SUMMARY: OPRE and the Family and Youth Services Bureau (FYSB) request an extension without changes to a currently approved information collection activity as part of Sexual Risk Avoidance Education Performance Analysis Study (SRAE PAS)(OMB Control No. 0970–0536; expiration date October 31, 2022). The goal of the study is to collect, analyze, and report on performance measures data for the SRAE program.

DATES: *Comments are due within 60 days of publication.* In compliance with the requirements of the Paperwork Reduction Act (PRA) of 1995, ACF is soliciting public comment on the specific aspects of the information collection described above.

ADDRESSES: You can obtain copies of the proposed collection of information and submit comments by emailing *opreinfocollection@acf.hhs.gov.* Identify all requests by the title of the information collection.

SUPPLEMENTARY INFORMATION:

Description: The purpose of the SRAE program is to educate youth on how to voluntarily refrain from nonmarital sexual activity and prevent other youth risk behaviors. The requested extension will allow ACF to continue to collect the performance measures from SRAE grantees. Data will continue to be used to determine if the SRAE grantees are meeting performance benchmarks related to their program's mission and priorities. The program office will continue to use the data to provide technical assistance to grantees and for its own reporting purposes.

Respondents: Departmental Sexual Risk Avoidance Education (DSRAE), State Sexual Risk Avoidance Education (SSRAE), and Competitive Sexual Risk Avoidance Education (CSRAE) grantees, their sub recipients, and program participants.

ANNUAL BURDEN ESTIMATES

Instrument	Number of respondents (total over request period)	Number of responses per respondent (total over request period)	Average burden per response (in hours)	Total burden (in hours)	Annual burden (in hours)
(1) Participant Entry Survey					
DSRAE participants	378,390	1	0.1333	50,439	16,813
SSRAE participants	952,899	1	0.1333	127,021	42,340
CSRAE participants	60,408	1	0.1333	8,052	2,684
(2) Participant Exit Survey					
DSRAE participants	302,712	1	0.1667	50,462	16,821
SSRAE participants	762,319	1	0.1667	127,079	42,360
CSRAE participants	48,326	1	0.1667	8,056	2,685
(3) Performance reporting data entry form: grantees					
DSRAE grantees	119	6	16	11,424	3,808
SSRAE grantees	39	6	16	3,744	1,248
CSRAE grantees	34	6	16	3,264	1,088
(4) Performance reporting data entry form: subrecipients					
DSRAE subrecipients	252	6	13	19,656	6,552

ANNUAL BURDEN ESTIMATES—Continued

Instrument	Number of respondents (total over request period)	Number of responses per respondent (total over request period)	Average burden per response (in hours)	Total burden (in hours)	Annual burden (in hours)
SSRAE subrecipients	426	6	13	33,228	11,076
CSRAE subrecipients	63	6	13	4,914	1,638

Estimated Total Annual Burden Hours: 149,113.

Comments: The Department specifically requests comments on (a) whether the proposed collection of information is necessary for the proper performance of the functions of the agency, including whether the information shall have practical utility; (b) the accuracy of the agency's estimate of the burden of the proposed collection of information; (c) the quality, utility, and clarity of the information to be collected; and (d) ways to minimize the burden of the collection of information on respondents, including through the use of automated collection techniques or other forms of information technology. Consideration will be given to comments and suggestions submitted within 60 days of this publication.

Authority: 42 U.S.C. 1310.

Mary B. Jones,

ACF/OPRE Certifying Officer.

[FR Doc. 2022–14026 Filed 6–29–22; 8:45 am]

BILLING CODE 4184–83–P

DEPARTMENT OF HEALTH AND HUMAN SERVICES

Food and Drug Administration

[Docket No. FDA–2020–E–2251]

Determination of Regulatory Review Period for Purposes of Patent Extension; TEPEZZA

AGENCY: Food and Drug Administration, Health and Human Services (HHS).

ACTION: Notice.

SUMMARY: The Food and Drug Administration (FDA or the Agency) has determined the regulatory review period for TEPEZZA and is publishing this notice of that determination as required by law. FDA has made the determination because of the submission of an application to the Director of the U.S. Patent and Trademark Office (USPTO), Department of Commerce, for the extension of a patent which claims that human biological product.

DATES: Anyone with knowledge that any of the dates as published (see **SUPPLEMENTARY INFORMATION**) are incorrect may submit either electronic or written comments and ask for a redetermination by August 29, 2022. Furthermore, any interested person may petition FDA for a determination regarding whether the applicant for extension acted with due diligence during the regulatory review period by December 27, 2022. See ''Petitions'' in the **SUPPLEMENTARY INFORMATION** section for more information.

ADDRESSES: You may submit comments as follows. Please note that late, untimely filed comments will not be considered. Electronic comments must be submitted on or before August 29, 2022. The *https://www.regulations.gov* electronic filing system will accept comments until 11:59 p.m. Eastern Time at the end of August 29, 2022. Comments received by mail/hand delivery/courier (for written/paper submissions) will be considered timely if they are postmarked or the delivery service acceptance receipt is on or before that date.

Electronic Submissions

Submit electronic comments in the following way:

- *Federal eRulemaking Portal: https://www.regulations.gov.* Follow the instructions for submitting comments. Comments submitted electronically, including attachments, to *https://www.regulations.gov* will be posted to the docket unchanged. Because your comment will be made public, you are solely responsible for ensuring that your comment does not include any confidential information that you or a third party may not wish to be posted, such as medical information, your or anyone else's Social Security number, or confidential business information, such as a manufacturing process. Please note that if you include your name, contact information, or other information that identifies you in the body of your comments, that information will be posted on *https://www.regulations.gov.*
- If you want to submit a comment with confidential information that you do not wish to be made available to the public, submit the comment as a written/paper submission and in the manner detailed (see ''Written/Paper Submissions'' and ''Instructions'').

Written/Paper Submissions

Submit written/paper submissions as follows:

- *Mail/Hand Delivery/Courier (for written/paper submissions):* Dockets Management Staff (HFA–305), Food and Drug Administration, 5630 Fishers Lane, Rm. 1061, Rockville, MD 20852.
- For written/paper comments submitted to the Dockets Management Staff, FDA will post your comment, as well as any attachments, except for information submitted, marked and identified, as confidential, if submitted as detailed in ''Instructions.''

Instructions: All submissions received must include the Docket No. FDA–2020–E–2251 for ''Determination of Regulatory Review Period for Purposes of Patent Extension; TEPEZZA.'' Received comments, those filed in a timely manner (see **ADDRESSES**), will be placed in the docket and, except for those submitted as ''Confidential Submissions,'' publicly viewable at *https://www.regulations.gov* or at the Dockets Management Staff between 9 a.m. and 4 p.m., Monday through Friday, 240–402–7500.

- Confidential Submissions—To submit a comment with confidential information that you do not wish to be made publicly available, submit your comments only as a written/paper submission. You should submit two copies total. One copy will include the information you claim to be confidential with a heading or cover note that states ''THIS DOCUMENT CONTAINS CONFIDENTIAL INFORMATION.'' The Agency will review this copy, including the claimed confidential information, in its consideration of comments. The second copy, which will have the claimed confidential information redacted/blacked out, will be available for public viewing and posted on *https://www.regulations.gov.* Submit both copies to the Dockets Management Staff. If you do not wish your name and contact information to be made publicly

available, you can provide this information on the cover sheet and not in the body of your comments and you must identify this information as ''confidential.'' Any information marked as ''confidential'' will not be disclosed except in accordance with § 10.20 (21 CFR 10.20) and other applicable disclosure law. For more information about FDA's posting of comments to public dockets, see 80 FR 56469, September 18, 2015, or access the information at: *https://www.govinfo.gov/content/pkg/FR-2015-09-18/pdf/2015-23389.pdf.*

Docket: For access to the docket to read background documents or the electronic and written/paper comments received, go to *https://www.regulations.gov* and insert the docket number, found in brackets in the heading of this document, into the ''Search'' box and follow the prompts and/or go to the Dockets Management Staff, 5630 Fishers Lane, Rm. 1061, Rockville, MD 20852, 240–402–7500.

FOR FURTHER INFORMATION CONTACT: Beverly Friedman, Office of Regulatory Policy, Food and Drug Administration, 10903 New Hampshire Ave., Bldg. 51, Rm. 6250, Silver Spring, MD 20993, 301–796–3600.

SUPPLEMENTARY INFORMATION:

I. Background

The Drug Price Competition and Patent Term Restoration Act of 1984 (Pub. L. 98–417) and the Generic Animal Drug and Patent Term Restoration Act (Pub. L. 100–670) generally provide that a patent may be extended for a period of up to 5 years so long as the patented item (human drug or biologic product, animal drug product, medical device, food additive, or color additive) was subject to regulatory review by FDA before the item was marketed. Under these acts, a product's regulatory review period forms the basis for determining the amount of extension an applicant may receive.

A regulatory review period consists of two periods of time: a testing phase and an approval phase. For human biological products, the testing phase begins when the exemption to permit the clinical investigations of the biological product becomes effective and runs until the approval phase begins. The approval phase starts with the initial submission of an application to market the human biological product and continues until FDA grants permission to market the biological product. Although only a portion of a regulatory review period may count toward the actual amount of extension that the Director of USPTO may award (for example, half the testing phase must be subtracted as well as any time that may have occurred before the patent was issued), FDA's determination of the length of a regulatory review period for a human biological product will include all of the testing phase and approval phase as specified in 35 U.S.C. 156(g)(1)(B).

FDA has approved for marketing the human biologic product TEPEZZA (teprotumumab-trbw). TEPEZZA is indicated for the treatment of thyroid eye disease. Subsequent to this approval, the USPTO received a patent term restoration application for TEPEZZA (U.S. Patent No. 7,572,897) from Hoffman-La Roche Inc., and the USPTO requested FDA's assistance in determining this patent's eligibility for patent term restoration. In a letter dated April 5, 2021, FDA advised the USPTO that this human biological product had undergone a regulatory review period and that the approval of TEPEZZA represented the first permitted commercial marketing or use of the product. Thereafter, the USPTO requested that FDA determine the product's regulatory review period.

II. Determination of Regulatory Review Period

FDA has determined that the applicable regulatory review period for TEPEZZA is 2,958 days. Of this time, 2,760 days occurred during the testing phase of the regulatory review period, while 198 days occurred during the approval phase. These periods of time were derived from the following dates:

1. *The date an exemption under section 505(i) of the Federal Food, Drug, and Cosmetic Act (21 U.S.C. 355(i)) became effective:* December 18, 2011. The applicant claims December 19, 2011, as the date the investigational new drug application (IND) became effective. However, FDA records indicate that the IND effective date was December 18, 2011, which was 30 days after FDA receipt of the IND.

2. *The date the application was initially submitted with respect to the human biological product under section 351 of the Public Health Service Act (42 U.S.C. 262):* July 8, 2019. FDA has verified the applicant's claim that the biologics license application (BLA) for TEPEZZA (BLA 761143) was initially submitted on July 8, 2019.

3. *The date the application was approved:* January 21, 2020. FDA has verified the applicant's claim that BLA 761143 was approved on January 21, 2020.

This determination of the regulatory review period establishes the maximum potential length of a patent extension. However, the USPTO applies several statutory limitations in its calculations of the actual period for patent extension. In its application for patent extension, this applicant seeks 1,578 days of patent term extension.

III. Petitions

Anyone with knowledge that any of the dates as published are incorrect may submit either electronic or written comments and, under 21 CFR 60.24, ask for a redetermination (see **DATES**). Furthermore, as specified in § 60.30 (21 CFR 60.30), any interested person may petition FDA for a determination regarding whether the applicant for extension acted with due diligence during the regulatory review period. To meet its burden, the petition must comply with all the requirements of § 60.30, including but not limited to: must be timely (see DATES), must be filed in accordance with § 10.20, must contain sufficient facts to merit an FDA investigation, and must certify that a true and complete copy of the petition has been served upon the patent applicant. (See H. Rept. 857, part 1, 98th Cong., 2d sess., pp. 41–42, 1984.) Petitions should be in the format specified in 21 CFR 10.30.

Submit petitions electronically to *https://www.regulations.gov* at Docket No. FDA–2013–S–0610. Submit written petitions (two copies are required) to the Dockets Management Staff (HFA–305), Food and Drug Administration, 5630 Fishers Lane, Rm. 1061, Rockville, MD 20852.

Dated: June 24, 2022.

Lauren K. Roth,

Associate Commissioner for Policy.

[FR Doc. 2022–13956 Filed 6–29–22; 8:45 am]

BILLING CODE 4164–01–P

DEPARTMENT OF HEALTH AND HUMAN SERVICES

Food and Drug Administration

[Docket No. FDA–2022–P–0069]

Determination That MICRONOR (Norethindrone Tablets, 0.35 Milligram) Was Not Withdrawn From Sale for Reasons of Safety or Effectiveness

AGENCY: Food and Drug Administration, Health and Human Services (HHS).

ACTION: Notice.

SUMMARY: The Food and Drug Administration (FDA or Agency) has determined that MICRONOR (norethindrone tablets, 0.35 milligram (mg)) was not withdrawn from sale for reasons of safety or effectiveness. This

determination will allow FDA to approve abbreviated new drug applications (ANDAs) for norethindrone tablets, 0.35 mg, if all other legal and regulatory requirements are met.

FOR FURTHER INFORMATION CONTACT: Nikki Mueller, Center for Drug Evaluation and Research, Food and Drug Administration, 10903 New Hampshire Ave., Bldg. 51, Rm. 6280, Silver Spring, MD 20993–0002, 301–796–3601, *Nicole.Mueller@fda.hhs.gov.*

SUPPLEMENTARY INFORMATION: Section 505(j) of the Federal Food, Drug, and Cosmetic Act (FD&C Act) (21 U.S.C. 355(j)) allows the submission of an ANDA to market a generic version of a previously approved drug product. To obtain approval, the ANDA applicant must show, among other things, that the generic drug product: (1) has the same active ingredient(s), dosage form, route of administration, strength, conditions of use, and (with certain exceptions) labeling as the listed drug, which is a version of the drug that was previously approved, and (2) is bioequivalent to the listed drug. ANDA applicants do not have to repeat the extensive clinical testing otherwise necessary to gain approval of a new drug application (NDA).

Section 505(j)(7) of the FD&C Act requires FDA to publish a list of all approved drugs. FDA publishes this list as part of the ''Approved Drug Products With Therapeutic Equivalence Evaluations,'' which is known generally as the ''Orange Book.'' Under FDA regulations, drugs are removed from the list if the Agency withdraws or suspends approval of the drug's NDA or ANDA for reasons of safety or effectiveness or if FDA determines that the listed drug was withdrawn from sale for reasons of safety or effectiveness (21 CFR 314.162).

A person may petition the Agency to determine, or the Agency may determine on its own initiative, whether a listed drug was withdrawn from sale for reasons of safety or effectiveness. This determination may be made at any time after the drug has been withdrawn from sale, but must be made prior to FDA's approval of an ANDA that refers to the listed drug (§ 314.161 (21 CFR 314.161)). FDA may not approve an ANDA that does not refer to a listed drug.

MICRONOR (norethindrone tablets, 0.35 mg) is the subject of NDA 016954, held by Janssen Pharmaceuticals Inc. (Janssen), and initially approved on January 2, 1973. MICRONOR is indicated for the prevention of pregnancy.

In a document dated June 6, 2018, Janssen notified FDA that the decision to withdraw MICRONOR (norethindrone tablets, 0.35 mg) from sale was based on business reasons and not for reasons of safety or efficacy. FDA moved the drug product to the ''Discontinued Drug Product List'' section of the Orange Book.

Aurobindo Pharma USA, Inc., submitted a citizen petition dated January 11, 2022 (Docket No. FDA–2022–P–0069), under 21 CFR 10.30, requesting that the Agency determine whether MICRONOR (norethindrone tablets, 0.35 mg) was withdrawn from sale for reasons of safety or effectiveness.

After considering the citizen petition and reviewing Agency records and based on the information we have at this time, FDA has determined under § 314.161 that MICRONOR (norethindrone tablets, 0.35 mg) was not withdrawn for reasons of safety or effectiveness. The petitioner has identified no data or other information suggesting that MICRONOR (norethindrone tablets, 0.35 mg) was withdrawn for reasons of safety or effectiveness. We have carefully reviewed our files for records concerning the withdrawal of MICRONOR (norethindrone tablets, 0.35 mg) from sale. We have also independently evaluated relevant literature and data for possible postmarketing adverse events. We have reviewed the available evidence and determined that this drug product was not withdrawn from sale for reasons of safety or effectiveness.

Accordingly, the Agency will continue to list MICRONOR (norethindrone tablets, 0.35 mg) in the ''Discontinued Drug Product List'' section of the Orange Book. The ''Discontinued Drug Product List'' delineates, among other items, drug products that have been discontinued from marketing for reasons other than safety or effectiveness. ANDAs that refer to MICRONOR (norethindrone tablets, 0.35 mg) may be approved by the Agency as long as they meet all other legal and regulatory requirements for the approval of ANDAs. If FDA determines that labeling for this drug product should be revised to meet current standards, the Agency will advise ANDA applicants to submit such labeling.

Dated: June 24, 2022.

Lauren K. Roth,

Associate Commissioner for Policy.

[FR Doc. 2022–13958 Filed 6–29–22; 8:45 am]

BILLING CODE 4164–01–P

DEPARTMENT OF HEALTH AND HUMAN SERVICES

Food and Drug Administration

[Docket No. FDA–2018–N–2455]

Patient-Focused Drug Development: Selecting, Developing, or Modifying Fit-for-Purpose Clinical Outcome Assessments; Draft Guidance for Industry, Food and Drug Administration Staff, and Other Stakeholders; Availability

AGENCY: Food and Drug Administration, HHS.

ACTION: Notice of availability.

SUMMARY: The Food and Drug Administration (FDA or Agency) is announcing the availability of a draft guidance for industry entitled ''Patient-Focused Drug Development: Selecting, Developing, or Modifying Fit-for-Purpose Clinical Outcome Assessments.'' This guidance (Guidance 3) is the third in a series of four methodological patient-focused drug development (PFDD) guidance documents that describe how stakeholders (patients, researchers, medical product developers, and others) can collect and submit patient experience data and other relevant information from patients and caregivers to be used for medical product development and regulatory decision-making. When finalized, Guidance 3 will represent the current thinking of the Center for Drug Evaluation and Research, the Center for Biologics Evaluation and Research, and the Center for Devices and Radiological Health on this topic.

DATES: Submit either electronic or written comments on the draft guidance by September 28, 2022 to ensure that the Agency considers your comment on this draft guidance before it begins work on the final version of the guidance.

ADDRESSES: You may submit comments on any guidance at any time as follows:

Electronic Submissions

Submit electronic comments in the following way:

- *Federal eRulemaking Portal: https://www.regulations.gov.* Follow the instructions for submitting comments. Comments submitted electronically, including attachments, to *https://www.regulations.gov* will be posted to the docket unchanged. Because your comment will be made public, you are solely responsible for ensuring that your comment does not include any confidential information that you or a third party may not wish to be posted, such as medical information, your or

anyone else's Social Security number, or confidential business information, such as a manufacturing process. Please note that if you include your name, contact information, or other information that identifies you in the body of your comments, that information will be posted on *https://www.regulations.gov.*

• If you want to submit a comment with confidential information that you do not wish to be made available to the public, submit the comment as a written/paper submission and in the manner detailed (see ''Written/Paper Submissions'' and ''Instructions'').

Written/Paper Submissions

Submit written/paper submissions as follows:

• *Mail/Hand Delivery/Courier (for written/paper submissions):* Dockets Management Staff (HFA–305), Food and Drug Administration, 5630 Fishers Lane, Rm. 1061, Rockville, MD 20852.

• For written/paper comments submitted to the Dockets Management Staff, FDA will post your comment, as well as any attachments, except for information submitted, marked and identified, as confidential, if submitted as detailed in ''Instructions.''

Instructions: All submissions received must include the Docket No. FDA–2018–N–2455 for ''Patient-Focused Drug Development: Selecting, Developing, or Modifying Fit-for-Purpose Clinical Outcome Assessments.'' Received comments will be placed in the docket and, except for those submitted as ''Confidential Submissions,'' publicly viewable at *https://www.regulations.gov* or at the Dockets Management Staff between 9 a.m. and 4 p.m., Monday through Friday, 240–402–7500.

• Confidential Submissions—To submit a comment with confidential information that you do not wish to be made publicly available, submit your comments only as a written/paper submission. You should submit two copies total. One copy will include the information you claim to be confidential with a heading or cover note that states ''THIS DOCUMENT CONTAINS CONFIDENTIAL INFORMATION.'' The Agency will review this copy, including the claimed confidential information, in its consideration of comments. The second copy, which will have the claimed confidential information redacted/blacked out, will be available for public viewing and posted on *https://www.regulations.gov.* Submit both copies to the Dockets Management Staff. If you do not wish your name and contact information to be made publicly available, you can provide this information on the cover sheet and not in the body of your comments and you must identify this information as ''confidential.'' Any information marked as ''confidential'' will not be disclosed except in accordance with 21 CFR 10.20 and other applicable disclosure law. For more information about FDA's posting of comments to public dockets, see 80 FR 56469, September 18, 2015, or access the information at: *https://www.govinfo.gov/content/pkg/FR-2015-09-18/pdf/2015-23389.pdf.*

Docket: For access to the docket to read background documents or the electronic and written/paper comments received, go to *https://www.regulations.gov* and insert the docket number, found in brackets in the heading of this document, into the ''Search'' box and follow the prompts and/or go to the Dockets Management Staff, 5630 Fishers Lane, Rm. 1061, Rockville, MD 20852, 240–402–7500.

You may submit comments on any guidance at any time (see 21 CFR 10.115(g)(5)).

Submit written requests for single copies of the draft guidance to the Division of Drug Information, Center for Drug Evaluation and Research, Food and Drug Administration, 10001 New Hampshire Ave., Hillandale Building, 4th Floor, Silver Spring, MD 20993–0002, or to the Office of Communication, Outreach and Development, Center for Biologics Evaluation and Research, Food and Drug Administration, 10903 New Hampshire Ave., Bldg. 71, Rm. 3128, Silver Spring, MD 20993–0002. Send one self-addressed adhesive label to assist that office in processing your requests. See the **SUPPLEMENTARY INFORMATION** section for electronic access to the draft guidance document.

FOR FURTHER INFORMATION CONTACT: Shannon Cole, Center for Drug Evaluation and Research, Food and Drug Administration, 10903 New Hampshire Ave., Bldg. 51, Rm. 6306, Silver Spring, MD 20993–0002, 301–796–9208, *Shannon.Cole@fda.hhs.gov*; or Stephen Ripley, Center for Biologics Evaluation and Research, Food and Drug Administration, 10903 New Hampshire Ave., Bldg. 71, Rm. 7301, Silver Spring, MD 20993–0002, 240–402–7911; or Office of Strategic Partnerships and Technology Innovation, Center for Devices and Radiological Health, *cdrh-pro@fda.hhs.gov,* 800–638–2041 or 301–796–7100.

SUPPLEMENTARY INFORMATION:

I. Background

FDA is announcing the availability of a draft guidance for industry entitled ''Patient-Focused Drug Development: Selecting, Developing, or Modifying Fit-for-Purpose Clinical Outcome Assessments.'' This guidance (Guidance 3) is the third in a series of four methodological PFDD guidance documents that describe how stakeholders (patients, researchers, medical product developers, and others) can collect and submit patient experience data and other relevant information from patients and caregivers to be used for medical product development and regulatory decision-making. For purposes of this guidance a ''medical product'' refers to a drug (as defined in section 201 of the Federal Food, Drug, and Cosmetic Act (21 U.S.C. 321)) intended for human use, a device (as defined in section 201), or a biological product (as defined in section 351 of the Public Health Service Act (42 U.S.C. 262)).

This series of guidance documents is intended to facilitate the advancement and use of systematic approaches to collect and use robust and meaningful input that can more consistently inform medical product development and regulatory decision-making. Guidance 3 discusses approaches to selecting, modifying, developing, and validating clinical outcome assessments to measure outcomes of importance to patients in clinical trials.

This draft guidance is being issued consistent with FDA's good guidance practices regulation (21 CFR 10.115). The draft guidance, when finalized, will represent the current thinking of FDA on ''Patient-Focused Drug Development: Selecting, Developing, or Modifying Fit-for-Purpose Clinical Outcome Assessments.'' It does not establish any rights for any person and is not binding on FDA or the public. You can use an alternative approach if it satisfies the requirements of the applicable statutes and regulations.

II. Paperwork Reduction Act of 1995

While this guidance contains no collection of information, it does refer to previously approved FDA collections of information. Therefore, clearance by the Office of Management and Budget (OMB) under the Paperwork Reduction Act of 1995 (PRA) (44 U.S.C. 3501–3521) is not required for this guidance. The previously approved collections of information are subject to review by OMB under the PRA. This guidance refers to collections of information from ''individuals under treatment or clinical examination in connection with research,'' which are not subject to review by OMB under 5 CFR 1320.3(h)(5). Respondents submit to FDA collections of information to support the medical product's

effectiveness and to support claims in approved medical labeling.

The collections of information in 21 CFR 314.50, 314.126, and 601.2 are submitted to FDA to support the medical product's effectiveness and to support claims in approved medical product labeling. The collections of information have been approved under OMB control numbers 0910–0001 and 0910–0338. The collections of information in 21 CFR 312.23 regarding investigational new drug applications, including clinical trial design and study protocols, have been approved under OMB control number 0910–0014. The collections of information in 21 CFR parts 50 and 56 regarding institutional review boards and the protection of human subjects have been approved under OMB control number 0910–0130. The collections of information in 21 CFR part 11 regarding electronic records and signatures have been approved under OMB control number 0910–0303. The collections of information described in FDA's guidance entitled ''Formal Meetings Between the FDA and Sponsors or Applicants of PDUFA Products''' (*https://www.fda.gov/media/109951/download*) have been approved under OMB control number 0910–0429.

III. Additional Information

Section 3002 of Title III, Subtitle A, of the 21st Century Cures Act (Pub. L. 114–255) directs FDA to develop patient-focused drug development guidance to address a number of areas, including under section 3002(c)(2): Methodological approaches that may be used to develop and identify what is important to patients with respect to burden of disease, burden of treatment, and the benefits and risks in the management of the patient's disease.

In addition, FDA committed to meet certain performance goals under the sixth authorization of the Prescription Drug User Fee Act. These goal commitments were developed in consultation with patient and consumer advocates, healthcare professionals, and other public stakeholders, as part of negotiations with regulated industry. Section J.1 of the commitment letter, ''Enhancing the Incorporation of the Patient's Voice in Drug Development and Decision-Making'' (*https://www.fda.gov/downloads/ForIndustry/UserFees/PrescriptionDrugUserFee/UCM511438.pdf*) outlines work, including the development of a series of guidance documents and associated public workshops to facilitate the advancement and use of systematic approaches to collect and use robust and meaningful patient and caregiver input that can more consistently inform drug development, and, as appropriate, regulatory decision-making.

IV. Electronic Access

Persons with access to the internet may obtain the draft guidance at *https://www.fda.gov/drugs/guidance-compliance-regulatory-information/guidances-drugs, https://www.fda.gov/vaccines-blood-biologics/guidance-compliance-regulatory-information-biologics/biologics-guidances, https://www.fda.gov/regulatory-information/search-fda-guidance-documents,* or *https://www.regulations.gov.*

Dated: June 24, 2022.

Lauren K. Roth,

Associate Commissioner for Policy.

[FR Doc. 2022–13952 Filed 6–29–22; 8:45 am]

BILLING CODE 4164–01–P

DEPARTMENT OF HEALTH AND HUMAN SERVICES

Health Resources and Services Administration

National Vaccine Injury Compensation Program; List of Petitions Received

AGENCY: Health Resources and Services Administration (HRSA), Department of Health and Human Services (HHS).

ACTION: Notice.

SUMMARY: HRSA is publishing this notice of petitions received under the National Vaccine Injury Compensation Program (the Program), as required by the Public Health Service (PHS) Act, as amended. While the Secretary of HHS is named as the respondent in all proceedings brought by the filing of petitions for compensation under the Program, the United States Court of Federal Claims is charged by statute with responsibility for considering and acting upon the petitions.

FOR FURTHER INFORMATION CONTACT: For information about requirements for filing petitions, and the Program in general, contact Lisa L. Reyes, Clerk of Court, United States Court of Federal Claims, 717 Madison Place NW, Washington, DC 20005, (202) 357–6400. For information on HRSA's role in the Program, contact the Director, National Vaccine Injury Compensation Program, 5600 Fishers Lane, Room 08N146B, Rockville, Maryland 20857; (301) 443–6593, or visit our website at: *http://www.hrsa.gov/vaccinecompensation/index.html.*

SUPPLEMENTARY INFORMATION: The Program provides a system of no-fault compensation for certain individuals who have been injured by specified childhood vaccines. Subtitle 2 of Title XXI of the PHS Act, 42 U.S.C. 300aa–10 *et seq.,* provides that those seeking compensation are to file a petition with the United States Court of Federal Claims and to serve a copy of the petition to the Secretary of HHS, who is named as the respondent in each proceeding. The Secretary has delegated this responsibility under the Program to HRSA. The Court is directed by statute to appoint special masters who take evidence, conduct hearings as appropriate, and make initial decisions as to eligibility for, and amount of, compensation.

A petition may be filed with respect to injuries, disabilities, illnesses, conditions, and deaths resulting from vaccines described in the Vaccine Injury Table (the Table) set forth at 42 CFR 100.3. This Table lists for each covered childhood vaccine the conditions that may lead to compensation and, for each condition, the time period for occurrence of the first symptom or manifestation of onset or of significant aggravation after vaccine administration. Compensation may also be awarded for conditions not listed in the Table and for conditions that are manifested outside the time periods specified in the Table, but only if the petitioner shows that the condition was caused by one of the listed vaccines.

Section 2112(b)(2) of the PHS Act, 42 U.S.C. 300aa–12(b)(2), requires that ''[w]ithin 30 days after the Secretary receives service of any petition filed under section 2111 the Secretary shall publish notice of such petition in the **Federal Register**.'' Set forth below is a list of petitions received by HRSA on April 1, 2022, through April 30, 2022. This list provides the name of petitioner, city and state of vaccination (if unknown then city and state of person or attorney filing claim), and case number. In cases where the Court has redacted the name of a petitioner and/or the case number, the list reflects such redaction.

Section 2112(b)(2) also provides that the special master ''shall afford all interested persons an opportunity to submit relevant, written information'' relating to the following:

1. The existence of evidence ''that there is not a preponderance of the evidence that the illness, disability, injury, condition, or death described in the petition is due to factors unrelated to the administration of the vaccine described in the petition,'' and

2. Any allegation in a petition that the petitioner either:

a. ''[S]ustained, or had significantly aggravated, any illness, disability, injury, or condition not set forth in the Vaccine Injury Table but which was caused by'' one of the vaccines referred to in the Table, or

b. ''[S]ustained, or had significantly aggravated, any illness, disability, injury, or condition set forth in the Vaccine Injury Table the first symptom or manifestation of the onset or significant aggravation of which did not occur within the time period set forth in the Table but which was caused by a vaccine'' referred to in the Table.

In accordance with Section 2112(b)(2), all interested persons may submit written information relevant to the issues described above in the case of the petitions listed below. Any person choosing to do so should file an original and three (3) copies of the information with the Clerk of the United States Court of Federal Claims at the address listed above (under the heading ''For Further Information Contact''), with a copy to HRSA addressed to Director, Division of Injury Compensation Programs, Health Systems Bureau, 5600 Fishers Lane, 08N146B, Rockville, Maryland 20857. The Court's caption (*Petitioner's Name* v. *Secretary of HHS*) and the docket number assigned to the petition should be used as the caption for the written submission. Chapter 35 of title 44, United States Code, related to paperwork reduction, does not apply to information required for purposes of carrying out the Program.

Carole Johnson,

Administrator.

List of Petitions Filed

1. Sherrie Grabp on behalf of Judith Grabp, Deceased, Buffalo, New York, Court of Federal Claims No: 22–0375V
2. Douglas Berman, Boston, Massachusetts, Court of Federal Claims No: 22–0380V
3. Tommy E. Martin, Charlotte, North Carolina, Court of Federal Claims No: 22–0384V
4. Katelin Whiddon, Conway, Arkansas, Court of Federal Claims No: 22–0385V
5. Bridgette Melvin, Oswego, New York, Court of Federal Claims No: 22–0386V
6. Rasheedah Smith, Atlanta, Georgia, Court of Federal Claims No: 22–0387V
7. Sheila Porter, Goodyear, Arizona, Court of Federal Claims No: 22–0389V
8. Mark Humpfer, Schererville, Indiana, Court of Federal Claims No: 22–0390V
9. Darla Wilson, Bloomington, Indiana, Court of Federal Claims No: 22–0393V
10. Maria Schory, Grand Island, New York, Court of Federal Claims No: 22–0394V
11. Josie Ransom, Athens, Georgia, Court of Federal Claims No: 22–0395V
12. Deborah Precil, Maple Shade, New Jersey, Court of Federal Claims No: 22–0396V
13. Rodney Moore, Columbia, Maryland, Court of Federal Claims No: 22–0397V
14. Xania Murray, Denton, Texas, Court of Federal Claims No: 22–0398V
15. Amanda Seigel, Perry, Michigan, Court of Federal Claims No: 22–0399V
16. Jason Brose, Chester Springs, Pennsylvania, Court of Federal Claims No: 22–0401V
17. Krzysztof Kosmicki, Cheyenne, Wyoming, Court of Federal Claims No: 22–0402V
18. Donna Nemuras, Hancock, Maryland, Court of Federal Claims No: 22–0403V
19. Marie Sroka, Walton, New York, Court of Federal Claims No: 22–0405V
20. Brigette Klish, Urbana, Illinois, Court of Federal Claims No: 22–0408V
21. Arlene Weiss, Delray Beach, Florida, Court of Federal Claims No: 22–0409V
22. Ryan Mehm on behalf of C. M., Gaithersburg, Maryland, Court of Federal Claims No: 22–0413V
23. Homer Stine, Ponte Vedra, Florida, Court of Federal Claims No: 22–0415V
24. Mary Flatt, Des Moines, Iowa, Court of Federal Claims No: 22–0416V
25. Shelly Vera, Houston, Texas, Court of Federal Claims No: 22–0421V
26. Sherri Smilow, Robbinsville, New Jersey, Court of Federal Claims No: 22–0425V
27. Doris Clark, Madisonville, Kentucky, Court of Federal Claims No: 22–0427V
28. Kelsey Jaranilla and Ryan Jaranilla on behalf of B. J., Salem, Oregon, Court of Federal Claims No: 22–0428V
29. Steven Koruan, Boston, Massachusetts, Court of Federal Claims No: 22–0430V
30. Amy Scarfpin, Westerville, Ohio, Court of Federal Claims No: 22–0431V
31. Antoinette Harris, Heath Springs, South Carolina, Court of Federal Claims No: 22–0432V
32. Christine Madden, Chicago, Illinois, Court of Federal Claims No: 22–0433V
33. Brenda McGaha, Farmington, New Mexico, Court of Federal Claims No: 22–0436V
34. Tammy Beaver, Houston, Texas, Court of Federal Claims No: 22–0439V
35. Emily Cafarella, Phoenix, Arizona, Court of Federal Claims No: 22–0444V
36. Kristen Linton on behalf of C. K., Phoenix, Arizona, Court of Federal Claims No: 22–0445V
37. Beverly Padratzik, Chicago, Illinois, Court of Federal Claims No: 22–0448V
38. Natalie Lawrence, Columbia, South Carolina, Court of Federal Claims No: 22–0450V
39. Katie Pendleton, Dayton, Ohio, Court of Federal Claims No: 22–0454V
40. Margarita Galvan, Houston, Texas, Court of Federal Claims No: 22–0455V
41. Eric Daniel and Chris Daniel on behalf of M. D., Phoenix, Arizona, Court of Federal Claims No: 22–0456V
42. Hanah Hilton on behalf of J. G., Phoenix, Arizona, Court of Federal Claims No: 22–0459V
43. Jason Craigle, Langhorne, Pennsylvania, Court of Federal Claims No: 22–0461V
44. Steven Hillstrom, Hancock, Michigan, Court of Federal Claims No: 22–0462V
45. Christopher James, Reston, Virginia, Court of Federal Claims No: 22–0463V
46. Angel Isai Rivera Gonzalez, San Juan, Puerto Rico, Court of Federal Claims No: 22–0464V
47. Corinne Fenn on behalf of R. F., Monroe, North Carolina, Court of Federal Claims No: 22–0465V
48. Larissa Aidone, Islip, New York, Court of Federal Claims No: 22–0467V
49. Lessie Williams, Greensboro, North Carolina, Court of Federal Claims No: 22–0469V
50. Nicholas J. Gauthier, Fort Hood, Texas, Court of Federal Claims No: 22–0470V
51. Gina Crete, Glens Falls, New York, Court of Federal Claims No: 22–0472V
52. Janet Solorio, Sacramento, California, Court of Federal Claims No: 22–0473V
53. John Giangiulio, Devon, Pennsylvania, Court of Federal Claims No: 22–0474V
54. Lisa Ortiz, Ocoee, Florida, Court of Federal Claims No: 22–0475V
55. Patricia Stewart-Robinson, Rego Park, New York, Court of Federal Claims No: 22–0477V
56. Royann Matsel on behalf of the Estate of David Matsel, Kansas City, Missouri, Court of Federal Claims No: 22–0478V
57. Amy Collins on behalf of H. C., Phoenix, Arizona, Court of Federal Claims No: 22–0479V
58. Yul Bernard, Boston, Massachusetts, Court of Federal Claims No: 22–0480V
59. Robert Long, El Cajon, California, Court of Federal Claims No: 22–0481V
60. Claudia Praetel on behalf of M. P., Phoenix, Arizona, Court of Federal Claims No: 22–0482V
61. Abby Vaughn, Barron, Wisconsin, Court of Federal Claims No: 22–0483V
62. Weiwei Dong and Xiangli Kong on behalf of V. K., Fairbanks, Alaska, Court of Federal Claims No: 22–0486V
63. Sharon Scott on behalf of S. S., Phoenix, Arizona, Court of Federal Claims No: 22–0487V

[FR Doc. 2022–14038 Filed 6–29–22; 8:45 am]

BILLING CODE 4165–15–P

DEPARTMENT OF HEALTH AND HUMAN SERVICES

National Institutes of Health

Office of the Director, National Institutes of Health; Notice of Closed Meeting

Pursuant to section 10(d) of the Federal Advisory Committee Act, as amended, notice is hereby given of the following meeting.

The meeting will be closed to the public in accordance with the provisions set forth in sections 552b(c)(4) and 552b(c)(6), Title 5 U.S.C., as amended. The grant applications and the discussions could disclose confidential trade secrets or commercial property such as patentable material, and personal information concerning individuals associated with the grant applications, the disclosure of which would constitute a clearly unwarranted invasion of personal privacy.

Name of Committee: Office of Research Infrastructure Programs Special Emphasis Panel; Member Conflicts: Scientific and Technical Review Board on Biomedical and Behavioral Research Facilities (STOD).

Date: July 28, 2022.

Time: 1:00 p.m. to 6:00 p.m.

Agenda: To review and evaluate grant applications.

Place: National Institutes of Health, Rockledge II, 6701 Rockledge Drive, Bethesda, MD 20892 (Virtual Meeting).

Contact Person: Jonathan K. Ivins, Ph.D., Scientific Review Officer, Center for Scientific Review, National Institutes of Health, 6701 Rockledge Drive, Room 2190, MSC 7850, Bethesda, MD 20892, (301) 594–1245, *ivinsj@csr.nih.gov.*

(Catalogue of Federal Domestic Assistance Program Nos. 93.14, Intramural Research Training Award; 93.22, Clinical Research Loan Repayment Program for Individuals from Disadvantaged Backgrounds; 93.232, Loan Repayment Program for Research Generally; 93.39, Academic Research Enhancement Award; 93.936, NIH Acquired Immunodeficiency Syndrome Research Loan Repayment Program; 93.187, Undergraduate Scholarship Program for Individuals from Disadvantaged Backgrounds, National Institutes of Health, HHS)

Miguelina Perez,

Program Analyst, Office of Federal Advisory Committee Policy.

[FR Doc. 2022–13965 Filed 6–29–22; 8:45 am]

BILLING CODE 4140–01–P

DEPARTMENT OF HEALTH AND HUMAN SERVICES

National Institutes of Health

National Institute of Mental Health; Notice of Closed Meeting

Pursuant to section 10(d) of the Federal Advisory Committee Act, as amended, notice is hereby given of the following meeting.

The meeting will be closed to the public in accordance with the provisions set forth in sections 552b(c)(4) and 552b(c)(6), Title 5 U.S.C., as amended. The grant applications and the discussions could disclose confidential trade secrets or commercial property such as patentable material, and personal information concerning individuals associated with the grant applications, the disclosure of which would constitute a clearly unwarranted invasion of personal privacy.

Name of Committee: National Institute of Mental Health Special Emphasis Panel; Mental Health Services Member Conflict.

Date: July 25, 2022.

Time: 4:00 p.m. to 5:00 p.m.

Agenda: To review and evaluate grant applications.

Place: National Institutes of Health, Neuroscience Center, 6001 Executive Boulevard, Rockville, MD 20852 (Virtual Meeting).

Contact Person: Regina Dolan-Sewell, Ph.D., Scientific Review Officer, Division of Extramural Activities, National Institute of Mental Health, National Institutes of Health, Neuroscience Center, 6001 Executive BLVD, Room 4154, MSC 9606, Bethesda, MD 20852, *regina.dolan-sewell@nih.gov.*

(Catalogue of Federal Domestic Assistance Program No. 93.242, Mental Health Research Grants, National Institutes of Health, HHS)

Dated: June 27, 2022.

Melanie J. Pantoja,

Program Analyst, Office of Federal Advisory Committee Policy.

[FR Doc. 2022–14002 Filed 6–29–22; 8:45 am]

BILLING CODE 4140–01–P

DEPARTMENT OF HEALTH AND HUMAN SERVICES

National Institutes of Health

Center for Scientific Review; Notice of Closed Meetings

Pursuant to section 10(d) of the Federal Advisory Committee Act, as amended, notice is hereby given of the following meetings.

The meetings will be closed to the public in accordance with the provisions set forth in sections 552b(c)(4) and 552b(c)(6), Title 5 U.S.C., as amended. The grant applications and the discussions could disclose confidential trade secrets or commercial property such as patentable material, and personal information concerning individuals associated with the grant applications, the disclosure of which would constitute a clearly unwarranted invasion of personal privacy.

Name of Committee: Center for Scientific Review Special Emphasis Panel; PAR Panel: Biomedical Data Repositories and Knowledgebases.

Date: July 21, 2022.

Time: 10:00 a.m. to 7:00 p.m.

Agenda: To review and evaluate grant applications.

Place: National Institutes of Health, Rockledge II, 6701 Rockledge Drive, Bethesda, MD 20892 (Virtual Meeting).

Contact Person: Joseph Thomas Peterson, Ph.D., Scientific Review Officer, Center for Scientific Review, National Institutes of Health, 6701 Rockledge Drive, Room 4118, MSC 7814, Bethesda, MD 20892, 301–408–9694, *petersonjt@csr.nih.gov.*

Name of Committee: Center for Scientific Review Special Emphasis Panel; Member Conflict: Skin Biology and Rheumatology.

Date: July 27, 2022.

Time: 1:00 p.m. to 8:00 p.m.

Agenda: To review and evaluate grant applications.

Place: National Institutes of Health, Rockledge II, 6701 Rockledge Drive, Bethesda, MD 20892 (Virtual Meeting).

Contact Person: Srikanth Ranganathan, Ph.D., Scientific Review Officer, Center for Scientific Review, National Institutes of Health, 6701 Rockledge Drive, Room 4214, MSC 7802, Bethesda, MD 20892, (301) 435–1787 *srikanth.ranganathan@nih.gov.*

Name of Committee: Center for Scientific Review Special Emphasis Panel; Member Conflict: Neurobiology and Neuropharmacology.

Date: August 2, 2022.

Time: 1:00 p.m. to 8:00 p.m.

Agenda: To review and evaluate grant applications.

Place: National Institutes of Health, Rockledge II, 6701 Rockledge Drive, Bethesda, MD 20892 (Virtual Meeting).

Contact Person: Ali Sharma, Ph.D., Scientific Review Officer, Center for Scientific Review, National Institutes of Health, 6701 Rockledge Drive, Room 1009J, Bethesda, MD 20892, (301) 402–3248, *sharmaa15@mail.nih.gov.*

(Catalogue of Federal Domestic Assistance Program Nos. 93.306, Comparative Medicine; 93.333, Clinical Research, 93.306, 93.333, 93.337, 93.393–93.396, 93.837–93.844, 93.846–93.878, 93.892, 93.893, National Institutes of Health, HHS)

Dated: June 27, 2022.

Tyeshia M. Roberson-Curtis,

Program Analyst, Office of Federal Advisory Committee Policy.

[FR Doc. 2022–14031 Filed 6–29–22; 8:45 am]

BILLING CODE 4140–01–P

DEPARTMENT OF HOMELAND SECURITY

U.S. Customs and Border Protection

[1651–0052]

User Fees

AGENCY: U.S. Customs and Border Protection (CBP), Department of Homeland Security.

ACTION: 60-Day notice and request for comments; extension of an existing collection of information.

SUMMARY: The Department of Homeland Security, U.S. Customs and Border Protection will be submitting the following information collection request to the Office of Management and Budget (OMB) for review and approval in accordance with the Paperwork Reduction Act of 1995 (PRA). The information collection is published in the **Federal Register** to obtain comments from the public and affected agencies.

DATES: Comments are encouraged and must be submitted (no later than August 29, 2022) to be assured of consideration.

ADDRESSES: Written comments and/or suggestions regarding the item(s) contained in this notice must include the OMB Control Number 1651–0052 in the subject line and the agency name. Please use the following method to submit comments:

Email: Submit comments to: *CBP_PRA@cbp.dhs.gov.*

Due to COVID–19-related restrictions, CBP has temporarily suspended its ability to receive public comments by mail.

FOR FURTHER INFORMATION CONTACT: Requests for additional PRA information should be directed to Seth Renkema, Chief, Economic Impact Analysis Branch, U.S. Customs and Border Protection, Office of Trade, Regulations and Rulings, 90 K Street NE, 10th Floor, Washington, DC 20229–1177, Telephone number 202–325–0056 or via email *CBP_PRA@cbp.dhs.gov.* Please note that the contact information provided here is solely for questions regarding this notice. Individuals seeking information about other CBP programs should contact the CBP National Customer Service Center at 877–227–5511, (TTY) 1–800–877–8339, or CBP website at *https://www.cbp.gov/*.

SUPPLEMENTARY INFORMATION: CBP invites the general public and other Federal agencies to comment on the proposed and/or continuing information collections pursuant to the Paperwork Reduction Act of 1995 (44 U.S.C. 3501 *et seq.*). This process is conducted in accordance with 5 CFR 1320.8. Written comments and suggestions from the public and affected agencies should address one or more of the following four points: (1) whether the proposed collection of information is necessary for the proper performance of the functions of the agency, including whether the information will have practical utility; (2) the accuracy of the agency's estimate of the burden of the proposed collection of information, including the validity of the methodology and assumptions used; (3) suggestions to enhance the quality, utility, and clarity of the information to be collected; and (4) suggestions to minimize the burden of the collection of information on those who are to respond, including through the use of appropriate automated, electronic, mechanical, or other technological collection techniques or other forms of information technology, *e.g.,* permitting electronic submission of responses. The comments that are submitted will be summarized and included in the request for approval. All comments will become a matter of public record.

Overview of This Information Collection

Title: User Fees.

OMB Number: 1651–0052.

Form Number: CBP Form 339A, 339C and 339V.

Current Actions: This submission is being made to extend the expiration date with a change to the annual burden hours previously reported. There is no change to the information collected.

Type of Review: Extension (with change).

Affected Public: Carriers.

Abstract: The Consolidated Omnibus Budget Reconciliation Act of 1985 (COBRA) (Pub. L. 99–272, 100 Stat. 82; 19 U.S.C. 58c), as amended, authorizes the collection of user fees by U.S. Customs and Border Protection (CBP). The collection of these fees requires submission of information from the party remitting the fees to CBP. This collection of information is provided for by 19 CFR 24.22. In certain cases, this information is submitted on one of three forms including the CBP Form 339A for payment upon arrival or prepayment of the annual user fee for a private aircraft (19 CFR 24.22(e)(1) and (2)), CBP Form 339C for prepayment of the annual user fee for a commercial vehicle (19 CFR 24.22(c)(3)), and CBP Form 339V for payment upon arrival or prepayment of the annual user fee for a private vessel (19 CFR 24.22(e)(1) and (2)). All forms can be accessed at: *https://www.cbp.gov/newsroom/publications/forms?title_1=339*.

The information on these forms may also be filed electronically at: *https://dtops.cbp.dhs.gov/*.

Similarly, as authorized by the COBRA, as amended, CBP collects fees from each carrier or operator using an express consignment carrier facility (ECCF) or a centralized hub facility as provided in 19 CFR 24.23(b)(4). The payment must be made to CBP on a quarterly basis and must cover the individual fees for all subject transactions that occurred during a calendar quarter. 19 CFR 24.23(b)(4)(i). The information set forth in 19 CFR 24.23(b)(4)(iii)(B) must be included with the quarterly payment (ECCF Quarterly Report). In cases of overpayments, carriers or operators using an ECCF or a centralized hub facility may send a request to CBP for a refund in accordance with 19 CFR 24.23(b)(4)(iii)(C). This request must specify the grounds for the refund.

In addition, CBP requires a prospective ECCF to include a list of all carriers or operators intending to use the facility, as well as other information requested in the application for approval of the ECCF in accordance with 19 CFR 128.11(b)(2). ECCFs are also required to provide to CBP at the beginning of each calendar quarter, a list of all carriers or operators currently using the facility and notify CBP whenever a new carrier or operator begins to use the facility or whenever a carrier or operator ceases to use the facility in accordance with 19 CFR 128.11(b)(7)(iv).

Type of Information Collection: Form 339A.

Estimated Number of Respondents: 35,000.

Estimated Number of Annual Responses per Respondent: 1.

Estimated Number of Total Annual Responses: 35,000.

Estimated Time per Response: 16 minutes.

Estimated Total Annual Burden Hours: 9,333.

Type of Information Collection: Form 339C Vehicles.

Estimated Number of Respondents: 80,000.

Estimated Number of Annual Responses per Respondent: 1.

Estimated Number of Total Annual Responses: 80,000.

Estimated Time per Response: 20 minutes.

Estimated Total Annual Burden Hours: 26,667.

Type of Information Collection: Form 339V.

Estimated Number of Respondents: 16,000.

Estimated Number of Annual Responses per Respondent: 1.

Estimated Number of Total Annual Responses: 16,000.

Estimated Time per Response: 16 minutes.

Estimated Total Annual Burden Hours: 4,267.

Type of Information Collection: ECCF Quarterly Report.

Estimated Number of Respondents: 18.

Estimated Number of Annual Responses per Respondent: 4.

Estimated Number of Total Annual Responses: 72.

Estimated Time per Response: 2 hours.

Estimated Total Annual Burden Hours: 144.

Type of Information Collection: ECCF Application and List of Couriers.

Estimated Number of Respondents: 3.

Estimated Number of Annual Responses per Respondent: 4.

Estimated Number of Total Annual Responses: 12.

Estimated Time per Response: 30 minutes.

Estimated Total Annual Burden Hours: 6.

Type of Information Collection: ECCF Refund Request.

Estimated Number of Respondents: 0.

Estimated Number of Annual Responses per Respondent: 0.

Estimated Number of Total Annual Responses: 0.

Estimated Time per Response: 30 minutes.

Estimated Total Annual Burden Hours: 0.

Dated: June 27, 2022.

Seth D. Renkema,

Branch Chief, Economic Impact Analysis Branch, U.S. Customs and Border Protection.

[FR Doc. 2022–14048 Filed 6–29–22; 8:45 am]

BILLING CODE P

DEPARTMENT OF HOMELAND SECURITY

U.S. Customs and Border Protection

[1651–0054]

Exportation of Used Self-Propelled Vehicles

AGENCY: U.S. Customs and Border Protection (CBP), Department of Homeland Security.

ACTION: 60-Day notice and request for comments; extension of an existing collection of information.

SUMMARY: The Department of Homeland Security, U.S. Customs and Border Protection will be submitting the following information collection request to the Office of Management and Budget (OMB) for review and approval in accordance with the Paperwork Reduction Act of 1995 (PRA). The information collection is published in the **Federal Register** to obtain comments from the public and affected agencies.

DATES: Comments are encouraged and must be submitted (no later than August 29, 2022) to be assured of consideration.

ADDRESSES: Written comments and/or suggestions regarding the item(s) contained in this notice must include the OMB Control Number 1651–0054 in the subject line and the agency name. Please use the following method to submit comments:

Email: Submit comments to: *CBP_PRA@cbp.dhs.gov.*

Due to COVID–19-related restrictions, CBP has temporarily suspended its ability to receive public comments by mail.

FOR FURTHER INFORMATION CONTACT: Requests for additional PRA information should be directed to Seth Renkema, Chief, Economic Impact Analysis Branch, U.S. Customs and Border Protection, Office of Trade, Regulations and Rulings, 90 K Street NE, 10th Floor, Washington, DC 20229–1177, Telephone number 202–325–0056 or via email *CBP_PRA@cbp.dhs.gov.* Please note that the contact information provided here is solely for questions regarding this notice. Individuals seeking information about other CBP programs should contact the CBP National Customer Service Center at 877–227–5511, (TTY) 1–800–877–8339, or CBP website at *https://www.cbp.gov/.*

SUPPLEMENTARY INFORMATION: CBP invites the general public and other Federal agencies to comment on the proposed and/or continuing information collections pursuant to the Paperwork Reduction Act of 1995 (44 U.S.C. 3501 *et seq.*). This process is conducted in accordance with 5 CFR 1320.8. Written comments and suggestions from the public and affected agencies should address one or more of the following four points: (1) whether the proposed collection of information is necessary for the proper performance of the functions of the agency, including whether the information will have practical utility; (2) the accuracy of the agency's estimate of the burden of the proposed collection of information, including the validity of the methodology and assumptions used; (3) suggestions to enhance the quality, utility, and clarity of the information to be collected; and (4) suggestions to minimize the burden of the collection of information on those who are to respond, including through the use of appropriate automated, electronic, mechanical, or other technological collection techniques or other forms of information technology, *e.g.,* permitting electronic submission of responses. The comments that are submitted will be summarized and included in the request for approval. All comments will become a matter of public record.

Overview of This Information Collection

Title: Exportation of Used Self-Propelled Vehicles.

OMB Number: 1651–0054.

Form Number: N/A.

Current Actions: CBP proposes to extend the expiration date of this information collection with a change to the collection and a decrease in burden.

Type of Review: Extension (with change).

Affected Public: Individuals and Businesses.

Abstract: U.S. Customs and Border Protection (CBP) regulations require an individual attempting to export a used self-propelled vehicle to furnish documentation to CBP at the port of export. Exportation of a vehicle is permitted only upon compliance with these requirements. The required documentation includes, but is not limited to, a Certificate of Title or a Salvage Title, the Vehicle Identification Number (VIN), a Manufacturer's Statement of Origin, etc. CBP will accept originals or certified copies of Certificate of Title. The purpose of this information is to help ensure that stolen vehicles or vehicles associated with other criminal activity are not exported.

Collection of this information is authorized by 19 U.S.C.1627a, which provides CBP with authority to impose export reporting requirements on all used self-propelled vehicles. It is also authorized by Title IV, Section 401 of the Anti-Car Theft Act of 1992, 19 U.S.C. 1646c, which requires all persons exporting a used self-propelled vehicle to provide to CBP, at least 72 hours prior to export, the VIN and proof of ownership of each automobile. This information collection is provided for by 19 CFR part 192. Further guidance regarding these requirements is provided at: *https://www.cbp.gov/trade/basic-import-export/export-docs/motor-vehicle.*

New Change

Respondents are now able to submit supporting documentation through the Document Image System (DIS).

Type of Information Collection: Exportation of Self-Propelled Vehicles.

Estimated Number of Respondents: 750,000.

Estimated Number of Annual Responses per Respondent: 1.

Estimated Number of Total Annual Responses: 750,000.

Estimated Time per Response: 5 minutes.

Estimated Total Annual Burden Hours: 62,500.

Dated: June 24, 2022.

Seth D. Renkema,

Branch Chief, Economic Impact Analysis Branch, U.S. Customs and Border Protection.

[FR Doc. 2022–13948 Filed 6–29–22; 8:45 am]

BILLING CODE P

DEPARTMENT OF HOMELAND SECURITY

U.S. Customs and Border Protection

[1651–0053]

Accreditation of Commercial Testing Laboratories and Approval of Commercial Gaugers

AGENCY: U.S. Customs and Border Protection (CBP), Department of Homeland Security.

ACTION: 60-Day notice and request for comments; extension of an existing collection of information.

SUMMARY: The Department of Homeland Security, U.S. Customs and Border Protection will be submitting the following information collection request to the Office of Management and Budget (OMB) for review and approval in accordance with the Paperwork

Reduction Act of 1995 (PRA). The information collection is published in the **Federal Register** to obtain comments from the public and affected agencies.

DATES: Comments are encouraged and must be submitted no later than August 29, 2022 to be assured of consideration.

ADDRESSES: Written comments and/or suggestions regarding the item(s) contained in this notice must include the OMB Control Number 1651–0053 in the subject line and the agency name. Please use the following method to submit comments:

Email: Submit comments to: *CBP_PRA@cbp.dhs.gov.*

Due to COVID–19-related restrictions, CBP has temporarily suspended its ability to receive public comments by mail.

FOR FURTHER INFORMATION CONTACT: Requests for additional PRA information should be directed to Seth Renkema, Chief, Economic Impact Analysis Branch, U.S. Customs and Border Protection, Office of Trade, Regulations and Rulings, 90 K Street NE, 10th Floor, Washington, DC 20229–1177, Telephone number 202–325–0056 or via email *CBP_PRA@cbp.dhs.gov.* Please note that the contact information provided here is solely for questions regarding this notice. Individuals seeking information about other CBP programs should contact the CBP National Customer Service Center at 877–227–5511, (TTY) 1–800–877–8339, or CBP website at *https://www.cbp.gov/.*

SUPPLEMENTARY INFORMATION: CBP invites the general public and other Federal agencies to comment on the proposed and/or continuing information collections pursuant to the Paperwork Reduction Act of 1995 (44 U.S.C. 3501 *et seq.*). This process is conducted in accordance with 5 CFR 1320.8. Written comments and suggestions from the public and affected agencies should address one or more of the following four points: (1) whether the proposed collection of information is necessary for the proper performance of the functions of the agency, including whether the information will have practical utility; (2) the accuracy of the agency's estimate of the burden of the proposed collection of information, including the validity of the methodology and assumptions used; (3) suggestions to enhance the quality, utility, and clarity of the information to be collected; and (4) suggestions to minimize the burden of the collection of information on those who are to respond, including through the use of appropriate automated, electronic, mechanical, or other technological collection techniques or other forms of information technology, *e.g.,* permitting electronic submission of responses. The comments that are submitted will be summarized and included in the request for approval. All comments will become a matter of public record.

Overview of This Information Collection

Title: Accreditation of Commercial Testing Laboratories and Approval of Commercial Gaugers.

OMB Number: 1651–0053.

Form Number: CBP Form 6478.

Current Actions: This submission is being made to extend the expiration date with a decrease to the burden hours.

Type of Review: Extension (with change).

Affected Public: Businesses.

Abstract: Commercial laboratories seeking to become a Customs and Border Protection (CBP) Accredited Laboratory and commercial gaugers seeking to become a CBP Approved Gauger must submit the information specified in 19 CFR 151.12 and 19 CFR 151.13, respectively, to CBP on CBP Form 6478. After the initial accreditation and/or approval, a private company may apply to include additional facilities under its accreditation and/or approval by submitting a formal written request to CBP. This application process is authorized by Section 613 of Public Law 103–182 (North American Free Trade Agreement Implementation Act), codified at 19 U.S.C. 1499, which directs CBP to establish a procedure to accredit privately owned testing laboratories. The information collected is used by CBP in deciding whether to approve individuals or businesses desiring to measure bulk products or to analyze importations. Instructions for completing these applications are accessible at: *http://www.cbp.gov/about/labs-scientific/commercial-gaugers-and-laboratories.*

CBP Form 6478 is accessible at: *https://www.cbp.gov/sites/default/files/assets/documents/2022-May/CBP%20Form%206478.pdf.*

Type of Information Collection: Application.

Estimated Number of Respondents: 8.

Estimated Number of Annual Responses per Respondent: 1.

Estimated Number of Total Annual Responses: 8.

Estimated Time per Response: 75 minutes.

Estimated Total Annual Burden Hours: 10.

Dated: June 24, 2022.

Seth D. Renkema,

Branch Chief, Economic Impact Analysis Branch, U.S. Customs and Border Protection.

[FR Doc. 2022–13949 Filed 6–29–22; 8:45 am]

BILLING CODE 9111–14–P

DEPARTMENT OF HOMELAND SECURITY

U.S. Customs and Border Protection

[1651–0057]

Country of Origin Marking Requirements for Containers or Holders

AGENCY: U.S. Customs and Border Protection (CBP), Department of Homeland Security.

ACTION: 60-Day notice and request for comments; extension of an existing collection of information.

SUMMARY: The Department of Homeland Security, U.S. Customs and Border Protection will be submitting the following information collection request to the Office of Management and Budget (OMB) for review and approval in accordance with the Paperwork Reduction Act of 1995 (PRA). The information collection is published in the **Federal Register** to obtain comments from the public and affected agencies.

DATES: Comments are encouraged and must be submitted (no later than August 29, 2022) to be assured of consideration.

ADDRESSES: Written comments and/or suggestions regarding the item(s) contained in this notice must include the OMB Control Number 1651–0057 in the subject line and the agency name. Please use the following method to submit comments:

Email: Submit comments to: *CBP_PRA@cbp.dhs.gov.*

Due to COVID–19-related restrictions, CBP has temporarily suspended its ability to receive public comments by mail.

FOR FURTHER INFORMATION CONTACT: Requests for additional PRA information should be directed to Seth Renkema, Chief, Economic Impact Analysis Branch, U.S. Customs and Border Protection, Office of Trade, Regulations and Rulings, 90 K Street NE, 10th Floor, Washington, DC 20229–1177, Telephone number 202–325–0056 or via email *CBP_PRA@cbp.dhs.gov.* Please note that the contact information provided here is solely for questions regarding this notice. Individuals seeking information about other CBP programs should contact the CBP National Customer Service Center

at 877–227–5511, (TTY) 1–800–877–8339, or CBP website at *https://www.cbp.gov/.*

SUPPLEMENTARY INFORMATION: CBP invites the general public and other Federal agencies to comment on the proposed and/or continuing information collections pursuant to the Paperwork Reduction Act of 1995 (44 U.S.C. 3501 *et seq.*). This process is conducted in accordance with 5 CFR 1320.8. Written comments and suggestions from the public and affected agencies should address one or more of the following four points: (1) whether the proposed collection of information is necessary for the proper performance of the functions of the agency, including whether the information will have practical utility; (2) the accuracy of the agency's estimate of the burden of the proposed collection of information, including the validity of the methodology and assumptions used; (3) suggestions to enhance the quality, utility, and clarity of the information to be collected; and (4) suggestions to minimize the burden of the collection of information on those who are to respond, including through the use of appropriate automated, electronic, mechanical, or other technological collection techniques or other forms of information technology, *e.g.,* permitting electronic submission of responses. The comments that are submitted will be summarized and included in the request for approval. All comments will become a matter of public record.

Overview of This Information Collection

Title: Country of Origin Marking Requirements for Containers or Holders.

OMB Number: 1651–0057.

Form Number: N/A.

Current Actions: CBP proposes to extend the expiration date of this information collection with no change to the burden hours or to the information collected.

Type of Review: Extension (without change).

Affected Public: Businesses.

Abstract: Section 304 of the Tariff Act of 1930, as amended, 19 U.S.C. 1304, requires each imported article of foreign origin, or its container, to be marked in a conspicuous place as legibly, indelibly, and permanently as the nature of the article or container permits, with the English name of the country of origin. The marking informs the ultimate purchaser in the United States of the country of origin of the article or its container. The marking requirements for containers or holders of imported merchandise are provided for by 19 CFR 134.22(b).

The respondents to these requirements collection are members of the trade community who are familiar with CBP requirements and regulations.

Type of Information Collection: Country of Origin Marking.

Estimated Number of Respondents: 250.

Estimated Number of Annual Responses per Respondent: 40.

Estimated Number of Total Annual Responses: 10,000.

Estimated Time per Response: 15 seconds.

Estimated Total Annual Burden Hours: 41.

Dated: June 27, 2022.

Seth D. Renkema,

Branch Chief, Economic Impact Analysis Branch, U.S. Customs and Border Protection.

[FR Doc. 2022–14043 Filed 6–29–22; 8:45 am]

BILLING CODE P

DEPARTMENT OF HOUSING AND URBAN DEVELOPMENT

[Docket No. FR–7050–N–32]

30-Day Notice of Proposed Information Collection: Public Housing Flat Rent Exception Request Market Analysis, OMB Control No.: 2577–0290

AGENCY: Office of Policy Development and Research, Chief Data Officer, HUD.

ACTION: Notice.

SUMMARY: HUD is seeking approval from the Office of Management and Budget (OMB) for the information collection described below. In accordance with the Paperwork Reduction Act, HUD is requesting comment from all interested parties on the proposed collection of information. The purpose of this notice is to allow for an additional 30 days of public comment.

DATES: *Comments Due Date:* August 1, 2022.

ADDRESSES: Interested persons are invited to submit comments regarding this proposal. Written comments and recommendations for the proposed information collection should be sent within 30 days of publication of this notice to *OIRA_submission@omb.eop.gov* or *www.reginfo.gov/public/do/PRAMain.* Find this particular information collection by selecting ''Currently under 30-day Review—Open for Public Comments'' or by using the search function.

FOR FURTHER INFORMATION CONTACT: Colette Pollard, Reports Management Officer, REE, Department of Housing and Urban Development, 451 7th Street SW, Washington, DC 20410; email Colette Pollard at *Colette.Pollard@hud.gov* or telephone 202–402–3400. This is not a toll-free number. Copies of available documents submitted to OMB may be obtained from Ms. Pollard.

SUPPLEMENTARY INFORMATION: This notice informs the public that HUD is seeking approval from OMB for the information collection described in Section A.

The **Federal Register** no25513tice that solicited public comment on the information collection for a period of 60 days was published on April 29, 2022 at 87 FR 25513.

A. Overview of Information Collection

Title of Information Collection: Public Housing Flat Rent Exception Request Market Analysis.

OMB Approval Number: 2577–0290.

Type of Request: Revision of a currently approved collection.

Form Number: HUD–5880.

Description of the need for the information and proposed use: The form will streamline the process and reduce burden on PHAs when submitting a market analysis as part of a flat rent exception request in accordance with Notice PIH 2015–13(HA), which implements Section 238 of Title II of Public Law 113–235, the Department of Housing and Urban Development Appropriations Act of 2015. Notice PIH 2015–13(HA) allows PHAs to request flat rents that are based on the local rental market conditions, when the PHA can demonstrate through a market analysis that the FMRs are not reflective of the local market. The current submission process does not stipulate a template for PHA submissions, therefore PHAs spend widely varying amounts of time and effort compiling information which may or may not facilitate HUD's review of their request.

Respondents: Public Housing Authorities (PHAs).

Information collection	Number of respondents	Frequency of response	Responses per annum	Burden hour per response	Annual burden hours	Hourly cost per response	Annual cost
HUD–5880—Rent Adjustment Guide	50	1	1	8	400	$17.11	$6844.00
Total	.....	.....	.....	.....	.....	.....	.....

Explanation of burden hour and cost calculation:

- Number of respondents = 50
- Frequency of response/responses per annum = 1/1 (PHAs make one submission per fiscal year)
- Burden hours per response = estimated time to complete a market analysis
- Annual burden hours = 400
- Hourly cost per response = the average hourly pay rate earned by a housing specialist in a PHA responsible for collecting market data
- Annual cost = 400 * $17.11

B. Solicitation of Public Comment

This notice is soliciting comments from members of the public and affected parties concerning the collection of information described in Section A on the following:

(1) Whether the proposed collection of information is necessary for the proper performance of the functions of the agency, including whether the information will have practical utility;

(2) The accuracy of the agency's estimate of the burden of the proposed collection of information;

(3) Ways to enhance the quality, utility, and clarity of the information to be collected; and

(4) Ways to minimize the burden of the collection of information on those who are to respond; including through the use of appropriate automated collection techniques or other forms of information technology, *e.g.,* permitting electronic submission of responses

(5) ways to minimize the burden of the collection of information on those who are to respond, including the use of automated collection techniques or other forms of information technology.

HUD encourages interested parties to submit comment in response to these questions.

C. Authority

Section 3507 of the Paperwork Reduction Act of 1995, 44 U.S.C. chapter 35.

Colette Pollard,

Department Reports Management Officer, Office of Policy Development and Research, Chief Data Officer.

[FR Doc. 2022–14037 Filed 6–29–22; 8:45 am]

BILLING CODE 4210–67–P

DEPARTMENT OF HOUSING AND URBAN DEVELOPMENT

[Docket No. FR–7050–N–30]

30-Day Notice of Proposed Information Collection: Public Housing Grants Support for Payment Voucher, OMB Control No.: 2577–0299

AGENCY: Office of Policy Development and Research, Chief Data Officer, HUD.

ACTION: Notice.

SUMMARY: HUD is seeking approval from the Office of Management and Budget (OMB) for the information collection described below. In accordance with the Paperwork Reduction Act, HUD is requesting comment from all interested parties on the proposed collection of information. The purpose of this notice is to allow for an additional 30 days of public comment.

DATES: *Comments Due Date: August 1, 2022.*

ADDRESSES: Interested persons are invited to submit comments regarding this proposal. Written comments and recommendations for the proposed information collection should be sent within 30 days of publication of this notice to *OIRA_submission@omb.eop.gov* or *www.reginfo.gov/public/do/PRAMain.* Find this particular information collection by selecting ''Currently under 30-day Review—Open for Public Comments'' or by using the search function.

FOR FURTHER INFORMATION CONTACT: Colette Pollard, Reports Management Officer, REE, Department of Housing and Urban Development, 451 7th Street SW, Washington, DC 20410; email Colette Pollard at *Colette.Pollard@hud.gov* or telephone 202–402–3400. This is not a toll-free number. Copies of available documents submitted to OMB may be obtained from Ms. Pollard.

SUPPLEMENTARY INFORMATION: This notice informs the public that HUD is seeking approval from OMB for the information collection described in Section A.

The **Federal Register** notice that solicited public comment on the information collection for a period of 60 days was published on April 29, 2022 at 87 FR 25514.

A. Overview of Information Collection

Title of Information Collection: Public Housing Grants Support for Payment Voucher.

OMB Approval Number: 2577–0299.

Type of Request: Extension.

Form Number: SF–425, HUD–XXXXX.

Description of the need for the information and proposed use: HUD will require Public Housing Authorities (PHAs) to provide justification and support for vouchers drawing down certain Operating Fund grant and other supplemental or Public Housing grant funds from HUD's Line of Credit Control System (eLOCCS). The PHAs must provide justification and support that the expenditure of the grant funds is for eligible activities and meets the terms and conditions of the grant.

Respondents: Public Housing Authorities (PHAs).

Estimated Number of Respondents: 539 annually.

Estimated Number of Responses: 6,000 annually.

Frequency of Response: Frequency of response is estimated to be 6,000 total annually. PHAs are only required to submit forms when the department requires the PHA to provide support for voucher requests to drawdown grant funds.

Burden Hours per Response: Burden hours per response for a Support for Payment Vouchers form is 30 minutes.

Total Estimated Burdens: Total burden hours is estimated to be 3,000. Total burden cost is estimated to be $107,730.

B. Solicitation of Public Comment

This notice is soliciting comments from members of the public and affected parties concerning the collection of information described in Section A on the following:

(1) Whether the proposed collection of information is necessary for the proper performance of the functions of the agency, including whether the information will have practical utility;

(2) The accuracy of the agency's estimate of the burden of the proposed collection of information;

(3) Ways to enhance the quality, utility, and clarity of the information to be collected; and

(4) Ways to minimize the burden of the collection of information on those who are to respond; including through the use of appropriate automated collection techniques or other forms of information technology, *e.g.,* permitting electronic submission of responses.

(5) ways to minimize the burden of the collection of information on those who are to respond, including the use of automated collection techniques or other forms of information technology.

HUD encourages interested parties to submit comment in response to these questions.

C. Authority

Section 3507 of the Paperwork Reduction Act of 1995, 44 U.S.C. 3507.

Colette Pollard,

Department Reports Management Officer, Office of Policy Development and Research, Chief Data Officer.

[FR Doc. 2022–13991 Filed 6–29–22; 8:45 am]

BILLING CODE 4210–67–P

DEPARTMENT OF HOUSING AND URBAN DEVELOPMENT

[Docket No. FR–7050–N–31]

30-Day Notice of Proposed Information Collection: Remote Video Inspection, OMB Control No.: 2577–0298

AGENCY: Office of Policy Development and Research, Chief Data Officer, HUD.

ACTION: Notice.

SUMMARY: HUD is seeking approval from the Office of Management and Budget (OMB) for the information collection described below. In accordance with the Paperwork Reduction Act, HUD is requesting comment from all interested parties on the proposed collection of information. The purpose of this notice is to allow for an additional 30 days of public comment.

DATES: Comments Due Date: August 1, 2022.

ADDRESSES: I Interested persons are invited to submit comments regarding this proposal. Written comments and recommendations for the proposed information collection should be sent within 30 days of publication of this notice to *OIRA_submission@omb.eop.gov* or *www.reginfo.gov/public/do/PRAMain.* Find this particular information collection by selecting ''Currently under 30-day Review—Open for Public Comments'' or by using the search function.

FOR FURTHER INFORMATION CONTACT: Colette Pollard, Reports Management Officer, QDAM, Department of Housing and Urban Development, 451 7th Street SW, Washington, DC 20410; email Colette Pollard at *Colette.Pollard@hud.gov* or telephone 202–402–3400. This is not a toll-free number. Copies of available documents submitted to OMB may be obtained from Ms. Pollard.

SUPPLEMENTARY INFORMATION: This notice informs the public that HUD is seeking approval from OMB for the information collection described in Section A.

The **Federal Register** notice that solicited public comment on the information collection for a period of 60 days was published on April 29, 2022 at 87 FR 25512.

A. Overview of Information Collection

Title of Information Collection: Remote Video Inspection.

OMB Approval Number: 2577–0298.

Type of Request: Revision of currently approved collection.

Form Number: HUD Form 50139.

Description of the need for the information and proposed use: The information collection is required to continuously apply the Remote Video Inspections (RVI) criteria for the Uniform Physical Condition Standards (UPCS), the National Standards for the Physical Inspection of Real Estate (NSPIRE), Remote Video Collaborative Quality Assurance (RV CQA), and any other Real Estate Assessment Center (REAC) inspections.

Respondents: Residents, PHAs, POAs, Proxies (who will likely be PHA staff and Property Owner Agents), and Contract Inspectors.

Estimated Number of Respondents: 6,604 annually.

Estimated Number of Responses: 6,604 annually.

Frequency of Response: Frequency of response will align with the inspection schedule for the property, which will, at minimum, be inspected annually.

Burden Hours per Response: Burden hours per response depends on the information collection method. For the Pre-Inspection Checklist, the Burden Hours per Response is .33 hours. For the Pre-Remote Video Inspection Survey of Residents, the Burden Hours per Response is .08 hours. For the Survey of RV CQA Contract Inspectors, the Burden Hours per Response is .08 hours. For the Post-Remote Video Inspection Survey of Proxies, the Burden Hours per Response is .33 hours. For the Disclosure Form, the Burden Hours per Response is .17 hours.

Total Estimated Burdens: Total burden hours is estimated to be 1,498.8. Total burden cost is estimated to be $38,598.

B. Solicitation of Public Comment

This notice is soliciting comments from members of the public and affected parties concerning the collection of information described in Section A on the following:

(1) Whether the proposed collection of information is necessary for the proper performance of the functions of the agency, including whether the information will have practical utility;

(2) The accuracy of the agency's estimate of the burden of the proposed collection of information;

(3) Ways to enhance the quality, utility, and clarity of the information to be collected; and

(4) Ways to minimize the burden of the collection of information on those who are to respond; including through the use of appropriate automated collection techniques or other forms of information technology, *e.g.,* permitting electronic submission of responses.

(5) ways to minimize the burden of the collection of information on those who are to respond, including the use of automated collection techniques or other forms of information technology.

HUD encourages interested parties to submit comment in response to these questions.

C. Authority

Section 3507 of the Paperwork Reduction Act of 1995, 44 U.S.C. 3507.

Colette Pollard,

Department Reports Management Officer, Office of Policy Development and Research, Chief Data Officer.

[FR Doc. 2022–14009 Filed 6–29–22; 8:45 am]

BILLING CODE 4210–67–P

DEPARTMENT OF HOUSING AND URBAN DEVELOPMENT

[Docket No. FR–6331–N–04]

Request for Information Relating to the Implementation of the Build America, Buy America Act; Extension of Public Comment Period

AGENCY: Office of the Secretary, Department of Housing and Urban Development (HUD).

ACTION: Request for information; extension of public comment period.

SUMMARY: Through today's notice, HUD announces that it is extending the public comment period on its ''Request for Information Relating to the Implementation of the Build America, Buy America Act,'' published in the **Federal Register** on June 1, 2022.

DATES: *Comment Due Date:* The comment due date of July 1, 2022, for

the Request for Information published on June 1, 2022, at 87 FR 33193, is extended to July 15, 2022.

ADDRESSES: Interested persons are invited to submit comments responsive to this Request for Information to the Regulations Division, Office of General Counsel, Department of Housing and Urban Development, 451 7th Street SW, Room 10276, Washington, DC 20410–0500. Communications must refer to the above docket number and title. There are two methods for submitting public comments. All submissions must refer to the above docket number and title.

1. Submission of Comments by Mail. Comments may be submitted by mail to the Regulations Division, Office of General Counsel, Department of Housing and Urban Development, 451 7th Street SW, Room 10276, Washington, DC 20410–0500.

2. Electronic Submission of Comments. Interested persons may submit comments electronically through the Federal eRulemaking Portal at *http://www.regulations.gov.* HUD strongly encourages commenters to submit their feedback and recommendations electronically. Electronic submission of comments allows the commenter maximum time to prepare and submit a response, ensures timely receipt by HUD, and enables HUD to make comments immediately available to the public. Comments submitted electronically through the *http://www.regulations.gov* website can be viewed by other commenters and interested members of the public. Commenters should follow the instructions provided on that site to submit comments electronically.

Note: To receive consideration as public comments, responses must be submitted through one of the two methods specified above. It is not acceptable to submit comments by facsimile (fax) or electronic mail. Again, all submissions must refer to the docket number and title of the notice.

Public Inspection of Public Comments. All properly submitted comments and communications submitted to HUD will be available for public inspection and downloading at *http://www.regulations.gov.*

FOR FURTHER INFORMATION CONTACT: Contact Pamela Blumenthal, Office of Policy Development and Research, Department of Housing and Urban Development, 451 7th Street SW, Room 8138, Washington, DC 20410–0500; telephone number 202–402–7012 (this is not a toll-free number). Persons with hearing or speech impairments may access this number through TTY by calling the Federal Relay Service at 800–877–8339 (this is a toll-free number).

SUPPLEMENTARY INFORMATION: The Build America, Buy America Act (the Act) was enacted on November 15, 2021, as part of the Infrastructure Investment and Jobs Act (IIJA). Public Law 117–58. The Act establishes a domestic content procurement preference (the ''Buy American Preference,'' or ''BAP'') that applies to HUD's Federal financial assistance for Federal infrastructure programs. On June 1, 2022, HUD published a Request for Information (RFI) in the **Federal Register** to seek public input on the implementation of the Build America, Buy America Act (the Act) as it applies to HUD's Federal Financial Assistance. 87 FR 33193.

The RFI specifically sought input on the potential documentation and information collection necessary to estimate the information collection burden and assist HUD in the development of a Paperwork Reduction Act (PRA) package associated with a proposed general applicability waiver to the Act's BAP that HUD published on April 29, 2022. 87 FR 26219. In this waiver notice, HUD stated that recipients of Federal Financial Assistance from HUD are unfamiliar with the BAP and additional information collection requirements, as HUD's programs have not previously been subject to a similar Buy American preference. Thus, HUD found a general applicability waiver of the BAP to be in the public interest until HUD had the opportunity to fully review public comments on how to effectively reduce the burden on the public arising from information collection necessary to implement the Act.

Though not directly related to the June 1, 2022, RFI, HUD published a second proposed general applicability waiver of the BAP to HUD's Federal Financial Assistance awards for Tribes, Tribally Designated Housing Entities (TDHEs), and other Tribal Entities. 87 FR 26221. As provided in that notice, given that the BAP is new to HUD's Federal Financial Assistance directed to Tribes, TDHEs, and other Tribal Entities and the potential impact of the BAP on Tribal recipients, HUD found it would counter to the public interest to apply the BAP prior to completion of the Tribal consultation process. A general applicability waiver would provide the Department with sufficient time to comply with HUD's Tribal consultation process in recognition of Tribes' right to self-government and to inform a tailored implementation for Tribal recipients.

HUD's June 1, 2022, RFI established a comment due date of July 1, 2022. HUD has determined that an extension of the deadline would provide the time needed for HUD Federal Financial Assistance recipients; Federal, State, local, and Tribal government officials; and relevant stakeholders to submit comments and provide the specific information requested. Therefore, HUD is announcing through this notice an extended public comment period, for an additional 14-day period, to July 15, 2022.

Marcia L. Fudge,

Secretary.

[FR Doc. 2022–13964 Filed 6–29–22; 8:45 am]

BILLING CODE 4210–67–P

DEPARTMENT OF THE INTERIOR

Fish and Wildlife Service

[Docket No. FWS–HQ–IA–2022–0067; FXIA16710900000/223/FF09A30000; OMB Control Number 1018–0093]

Agency Information Collection Activities; Federal Fish and Wildlife Permit Applications and Reports—Management Authority

AGENCY: Fish and Wildlife Service, Interior.

ACTION: Notice of information collection; request for comment.

SUMMARY: In accordance with the Paperwork Reduction Act of 1995, we, the U.S. Fish and Wildlife Service (Service), are proposing to renew an information collection, with changes.

DATES: Interested persons are invited to submit comments on or before August 29, 2022.

ADDRESSES: Send your comments on the information collection request (ICR) by one of the following methods (please reference OMB Control No. 1018–0093 in the subject line of your comment):

- *Internet (preferred): https://www.regulations.gov.* Follow the instructions for submitting comments on Docket No. FWS–HQ–IA–2022–0067.
- *Email: Info_Coll@fws.gov.*
- *U.S. mail:* Service Information Collection Clearance Officer, U.S. Fish and Wildlife Service, 5275 Leesburg Pike, MS: PRB (JAO/3W); Falls Church, VA 22041–3803.

FOR FURTHER INFORMATION CONTACT: Madonna L. Baucum, Service Information Collection Clearance Officer, by email at *Info_Coll@fws.gov,* or by telephone at (703) 358–2503. Individuals in the United States who are deaf, deafblind, hard of hearing, or have a speech disability may dial 711 (TTY, TDD, or TeleBraille) to access telecommunications relay services. Individuals outside the United States should use the relay services offered within their country to make

international calls to the point-of-contact in the United States.

SUPPLEMENTARY INFORMATION: In accordance with the Paperwork Reduction Act (PRA; 44 U.S.C. 3501 *et seq.*) and its implementing regulations in the Code of Federal Regulations (CFR) at 5 CFR 1320, all information collections require approval under the PRA. We may not conduct or sponsor and you are not required to respond to a collection of information unless it displays a currently valid OMB control number.

As part of our continuing effort to reduce paperwork and respondent burdens, we invite the public and other Federal agencies to comment on new, proposed, revised, and continuing collections of information. This helps us assess the impact of our information collection requirements and minimize the public's reporting burden. It also helps the public understand our information collection requirements and provide the requested data in the desired format.

We are especially interested in public comment addressing the following:

(1) Whether or not the collection of information is necessary for the proper performance of the functions of the agency, including whether or not the information will have practical utility;

(2) The accuracy of our estimate of the burden for this collection of information, including the validity of the methodology and assumptions used;

(3) Ways to enhance the quality, utility, and clarity of the information to be collected; and

(4) How might the agency minimize the burden of the collection of information on those who are to respond, including through the use of appropriate automated, electronic, mechanical, or other technological collection techniques or other forms of information technology, *e.g.,* permitting electronic submission of response.

Comments that you submit in response to this notice are a matter of public record. We will include or summarize each comment in our request to OMB to approve this ICR. Before including your address, phone number, email address, or other personal identifying information in your comment, you should be aware that your entire comment—including your personal identifying information—may be made publicly available at any time. While you can ask us in your comment to withhold your personal identifying information from public review, we cannot guarantee that we will be able to do so.

Abstract: The General Permit Requirements at 50 CFR 13 provide the uniform rules, conditions, and procedures for the application for, and the issuance, denial, suspension, revocation, and general administration of, all permits for all of the laws, treaties, and regulations administered by the Service that authorize activities requiring permits. The requirements in 50 CFR part 13 are in addition to any other permit regulations that may apply to a specific circumstance and are outlined in other sections of our regulations.

The Wild Bird Conservation Act (WBCA; 16 U.S.C. 4901–4916) and the Convention on International Trade in Endangered Species of Wild Fauna and Flora (CITES; 27 U.S.T. 1087, March 3, 1973) use a system of permits and certificates to help ensure that international trade is legal and does not threaten the survival of wildlife or plant species in the wild. Permits under the U.S. Endangered Species Act (ESA; 16 U.S.C. 1531 *et seq.*) and the Marine Mammal Protection Act (MMPA; 16 U.S.C. 1361 *et seq.*) ensure that activities are consistent with the intent and purposes of the ESA and MMPA. Permitted activities under the Bald and Golden Eagle Act (BGEPA; 16 U.S.C. 668–668d) must be compatible with the preservation of eagles. Permitted activities under the Lacey Act (injurious wildlife; 18 U.S.C. 42; 16 U.S.C. 3371–3378) regulate the importation into the United States and any shipment between the continental United States, the District of Columbia, Alaska, Hawaii, the Commonwealth of Puerto Rico, or any possession of the United States, of animal species determined to be injurious by the Secretary of the Interior. Such importation and shipments are prohibited, except by permit. Although the Service's Division of Management Authority does not administer the Migratory Bird Treaty Act (MBTA; 16 U.S.C. 704), we receive authorization from the Migratory Bird Program to issue import/export permits under the MBTA.

Prior to the import or export of species listed under the MBTA, MMPA, BGEPA, Lacey Act, WBCA, ESA, and/or CITES, the Management Authority and Scientific Authority must make appropriate determinations and issue the appropriate documents. Section 8A of the ESA designates the Secretary of the Interior as the U.S. Management Authority and U.S. Scientific Authority for CITES. The Secretary in turn delegated these authorities to the Service.

Before a country can issue an export permit for CITES Appendix I or II specimens, the CITES Scientific Authority of the exporting country must determine that the export will not be detrimental to the survival of the species, and the Management Authority must be satisfied that the specimens were acquired legally. For the export of Appendix III specimens, the Management Authority must be satisfied that the specimens were acquired legally (CITES does not require findings from the Scientific Authority). Prior to the importation of Appendix I specimens, both the Scientific Authority and the Management Authority of the importing country must make required findings. The Scientific Authority must also monitor trade of all species to ensure that the level of trade is sustainable.

Article VIII(3) of the CITES treaty states that participating parties should make efforts to ensure that CITES specimens are traded with a minimum of delay. Section XIII of Resolution Conf. 12.3 (Rev. CoP18) recommends use of simplified procedures for issuing CITES documents to expedite trade that will have no impact, or a negligible impact, on conservation of the species involved.

All Service permit applications are in the 3–200 series of forms, each tailored to a specific activity based on the requirements for specific types of permits. In accordance with Federal regulations at 50 CFR 13.12, we collect standard identifier information for all permit applications, such as:

- Applicant's full name, whether an individual or business, and address (street address, city, county, State, and zip code; and mailing address, if different from street address); main and alternate telephone numbers; and an email address (required if filing electronically, optional for a mail-in application), and
  - —If the applicant resides or is located outside the United States, an address in the United States, and, if the applicant is conducting commercial activities, the name and address of the applicant's agent inside the United States; and
  - —If the applicant is a business, corporation, public agency, or institution, the tax identification number; description of the business type, corporation, agency, or institution; and the name and title of the person responsible for the permit (such as president, principal officer, or director);
- Location where the requested permitted activity is to occur or be conducted;
- Certification containing the following language:

—I hereby certify that I have read and am familiar with the regulations contained in title 50, part 13, of the Code of Federal Regulations and the other applicable parts in subchapter B of chapter I of title 50, Code of Federal Regulations, and I further certify that the information submitted in this application for a permit is complete and accurate to the best of my knowledge and belief. I understand that any false statement herein may subject me to suspension or revocation of this permit and to the criminal penalties of 18 U.S.C. 1001.

• Desired effective date of permit (except where issuance date is fixed by the part under which the permit is issued);

• Signature date;

• Signature of the applicant;

• Such other information as the Director determines relevant to the processing of the application, including but not limited to information on the environmental effects of the activity consistent with 40 CFR 1506.5 and Departmental procedures at 516 DM 6, appendix 1.3A; and

• Additional information required on applications for other types of permits may be found by referring to table 1 in paragraph (b) in 50 CFR 13.12.

Standardization of general information common to the application forms makes the filing of applications easier for the public, as well as expediting our review of applications. The information that we collect on applications and reports is the minimum necessary for us to determine if the applicant meets/continues to meet issuance requirements for the particular activity.

Proposed Revisions

In 2020, the Service implemented a new electronic permit application called ePermits. The ePermits system allowed the Service to move towards a streamlined permitting process to reduce the information collection burden on the public, particularly small businesses. Public burden reduction is a priority for the Service, the Assistant Secretary for Fish and Wildlife and Parks, and senior leadership at the Department of the Interior. The intent of the ePermits system is to fully modernize the permitting process to improve the customer experience and to reduce time burden on respondents. This system enhances the user experience by allowing users to enter data from any device that has internet access, including personal computers, tablets, and smartphones. It also links the permit applicant to the *Pay.gov* system for payment of the associated permit application fee.

Users of the ePermits system register for and use an account which will then automatically populate the forms they complete with the required identification information. The system eliminates the need for applicants to enter their information multiple times when they apply for separate permits and therefore reduces the burden on the applicant. The account registration process will also provide private sector users an opportunity to self-identify as a small business, which will enable the Service to more accurately report burden associated with information collection requirements placed on them.

At this time, the ePermits system is unable to fully digitize Section E of the permit application process. Section E of each permit application is customized based on the permit type. We anticipate being able to begin digitizing Section E on our application forms in calendar year 2022. As a result of challenges with the development of forms within the ePermits system, we do not have a timeline for full digitization of Section E. We anticipate beginning the digitization of the report forms contained in this collection by 2023, and believe the digitization of Section E on application forms should be finalized by fiscal year 2024, as funding and resources become available.

We anticipate changes to 12 application forms outlined below; however, we do not anticipate significant changes to the questions within Section E of the other application forms. We have identified questions that could be simplified into plain English. Our proposed changes to the application forms are described below:

• Changes to trophy applications (FWS Forms 3–200–19, ''*Import of Sport-Hunted Trophies of Southern African Leopard and Namibian Southern White Rhinoceros*''; 3–200–20, ''*Import of Sport-Hunted Trophies (Appendix I of CITES and/or ESA)*''; 3–200–21, ''*Import of Sport-Hunted Trophies of Argali*''; and 3–200–22, ''*Import of Sport-Hunted Bontebok Trophies from South Africa*''), to include specific questions on the sex and approximate age of the trophy, and copies of the specific forms provided by each country to the hunter as part of their application.

• Updating FWS Form 3–200–31, ''*Introduction from the Sea (CITES),*'' to add information requirements necessary to identify ports of entry to ensure proper inspection/clearance of specimens imported under the introduction from the sea.

• Updating FWS Form 3–200–32, ''*Export/Re-Export of Plants (CITES),*'' to ensure that each section of the application requests receipts documenting the legal acquisition of the species requested.

• Updating FWS Form 3–200–37d, ''*Interstate or Foreign commerce of Live Animals/Samples/or Products (ESA),*'' to add a question on the description of and justification for the requested activity. We will outline the information needed for each of the following purposes: scientific research, conservation education and/or zoological display, and captive propagation for the conservation and survival of the species.

• Based on requirements outlined in Resolution Conf. 11.20 (Rev CoP18), we will be updating FWS Form 3–200–37f, ''*Import of Live African Elephant from Botswana, Namibia, South Africa, and Zimbabwe and Southern White Rhino from Eswatini and South Africa,*'' to request additional information required in order to make the finding of appropriate and acceptable destinations for the import of live African elephants and rhinoceros.

• Updates to FWS Form 3–200–41, ''*Captive-Bred Wildlife Registration (U.S. Endangered Species Act,*'' will be updated to include all new applicants completing sections 1, 2, and 4, as appropriate, and section 3 for renewing a captive-bred wildlife registration.

• Splitting FWS Form 3–200–43, ''*Take/Import/Export of Marine Mammals for Public Display, Scientific Research, Enhancement, or Rescue/Rehabilitation/Release Activities or Renewal/Amendment of Existing Permit (MMPA and/or ESA),*'' into smaller parts to ensure the applicant can easily identify and submit the correct type of application for activities being requested under the MMPA.

• Clarification of information needed on FWS Form 3–200–46, ''*Import/Export/Re-Export of Personal Pets under the Conservation on International Trade in Endangered Species (CITES) and/or the U.S. Endangered Species Act (ESA),*'' will include the requirement of the address of an applicant when they will be relocating with their pet.

• Updates to FWS Form 3–200–73, ''*Re-Export of Wildlife (CITES),*'' will be updated to align with our FWS Form 3–200–24, ''*Export of Live Captive-Born Animals and/or Part/Products from Non-Native Species under the Convention on International Trade in Endangered Species (CITES),*'' for information collected on live animals to include the sex and birth/hatch date of the live wildlife to be re-exported.

We do not plan to make changes to the annual report forms contained in this collection. We do make note that some permits are issued with specific reporting requirements at the termination of the permitted activity. The information varies based on the permitted activities. The report is submitted at the time a permit renewal is requested or at the termination of the permitted activity.

The public may request copies of any form or document contained in this information collection by sending a request to the Service Information Collection Clearance Officer (see **ADDRESSES**, above).

Title of Collection: Federal Fish and Wildlife Permit Applications and Reports—Management Authority; 50 CFR 13, 15, 16, 17, 18, 22, 23.

OMB Control Number: 1018–0093.

Form Numbers: FWS Forms 3–200–19 through 3–200–37, 3–200–39 through 3–200–43, 3–200–46 through 3–200–53, 3–200–58, 3–200–61, 3–200–64 through 3–200–66, 3–200–69, 3–200–70, 3–200–73 through 3–200–76, 3–200–80, and 3–200–85 through 3–200–88.

Type of Review: Revision of a currently approved collection.

Description of Respondents/Affected Public: Individuals (including hunters); private sector (including biomedical companies, circuses, zoological parks, botanical gardens, nurseries, museums, universities, antique dealers, exotic pet industry, taxidermists, commercial importers/exporters of wildlife and plants, freight forwarders/brokers); and State, local, Tribal, and Federal governments.

Estimated Number of Annual Respondents: 6,659.

Estimated Number of Annual Responses: 8,912.

Estimated Completion Time per Response: Varies from 15 minutes to 43.5 hours, depending on activity.

Estimated Annual Burden Hours: 7,961.

Respondent's Obligation: Required to obtain or retain a benefit.

Frequency of Collection: On occasion or annually, depending on activity.

Total Estimated Annual Nonhour Burden Cost: $629,400 for costs associated with application processing fees, which range from $0 to $250. There is no fee for reports. State, local, Tribal, and Federal government agencies and those acting on their behalf are exempt from processing fees.

An agency may not conduct or sponsor and a person is not required to respond to a collection of information unless it displays a currently valid OMB control number.

The authority for this action is the Paperwork Reduction Act of 1995 (44 U.S.C. 3501 *et seq.*).

Madonna Baucum,

Information Collection Clearance Officer, U.S. Fish and Wildlife Service.

[FR Doc. 2022–13990 Filed 6–29–22; 8:45 am]

BILLING CODE 4333–15–P

DEPARTMENT OF THE INTERIOR

Bureau of Indian Affairs

[2231A2100DD/AAKC001030/A0A501010.999900]

Indian Gaming; Extension of Tribal-State Class III Gaming Compacts in California

AGENCY: Bureau of Indian Affairs, Interior.

ACTION: Notice.

SUMMARY: This notice announces the extension of the Class III gaming compacts between several tribes in California and the State of California.

DATES: The extension takes effect on June 30, 2022.

FOR FURTHER INFORMATION CONTACT: Ms. Paula L. Hart, Director, Office of Indian Gaming, Office of the Assistant Secretary—Indian Affairs, Washington, DC 20240, (202) 219–4066.

SUPPLEMENTARY INFORMATION: An extension to an existing Tribal-State Class III gaming compact does not require approval by the Secretary if the extension does not modify any other terms of the compact. 25 CFR 293.5. The following tribes and the State of California have reached an agreement to extend the expiration date of their existing Tribal-State Class III gaming compacts to December 31, 2023: the Alturas Indian Rancheria, California; the Augustine Band of Cahuilla Indians, California; the Bear River Band of the Rohnerville Rancheria, California; the Berry Creek Rancheria of Maidu Indians of California; the Big Sandy Rancheria of Western Mono Indians of California; the Bishop Paiute Tribe; the Blue Lake Rancheria; the Cachil Dehe Band of Wintun Indians of the Colusa Indian Community of the Colusa Rancheria, California; the Cahto Tribe of the Laytonville Rancheria; the Cahuilla Band of Indians; the Campo Band of Diegueno Mission Indians of the Campo Indian Reservation, California; the Chemehuevi Indian Tribe of the Chemehuevi Reservation, California; the Cher-Ae Heights Indian Community of the Trinidad Rancheria, California; the Chicken Ranch Rancheria of Me-Wuk Indians of California; the Elem Indian Colony of Pomo Indians of the Sulphur Bank Rancheria, California; the Ewiiaapaayp Band of Kumeyaay Indians, California; the Hopland Band of Pomo Indians, California; the Manchester Band of Pomo Indians of the Manchester Rancheria, California; the Middletown Rancheria of Pomo Indians of California; the Pauma Band of Luiseno Mission Indians of the Pauma & Yuima Reservation, California; the Picayune Rancheria of Chukchansi Indians of California; the Pit River Tribe, California; the Redding Rancheria, California; the Resighini Rancheria, California; the Robinson Rancheria; the Santa Rosa Indian Community of the Santa Rosa Rancheria, California; the Sherwood Valley Rancheria of Pomo Indians of California; the Soboba Band of Luiseno Indians, California; and the Table Mountain Rancheria. This publication provides notice of the new expiration date of the compacts.

Bryan Newland,

Assistant Secretary—Indian Affairs.

[FR Doc. 2022–14054 Filed 6–29–22; 8:45 am]

BILLING CODE 4337–15–P

DEPARTMENT OF THE INTERIOR

Bureau of Land Management, Interior

[LLNVB01000.L13400000.DN0000.223.LXSIGEOT0000.MO: 4500161169]

Notice of Availability of Draft Environmental Impact Statement for Nevada Gold Mines LLC Goldrush Mine Project, Lander and Eureka Counties, Nevada

AGENCY: Bureau of Land Management, Interior.

ACTION: Notice of availability.

SUMMARY: In compliance with the National Environmental Policy Act of 1969, as amended (NEPA), and the Federal Land Policy and Management Act of 1976, as amended (FLPMA), the Bureau of Land Management (BLM) announces the availability of the Draft Environmental Impact Statement (EIS) for the Nevada Gold Mines LLC Goldrush Mine Project and requests the public review and provide comments on the Draft EIS.

DATES: All comments must be received by August 15, 2022. The BLM will announce the date of a public meeting on the Draft EIS at least 15 days in advance of the meeting on the BLM National ePlanning website *https://go.usa.gov/xsVs8.* The public meeting will be held online.

ADDRESSES: The Draft EIS is available for review on the BLM ePlanning project website at *https://go.usa.gov/xsVs8.*

Written comments related to the Nevada Gold Mines (NGM) LLC Goldrush Mine Project may be submitted by any of the following methods:

- *ePlanning website: https://go.usa.gov/xsVs8.*
- *Email: BLM_NV_BMDO_P&EC_NEPA@blm.gov.*
- *Mail:* Goldrush Mine EIS c/o BLM Mount Lewis Field Office, 50 Bastian Road, Battle Mountain, NV 89820.

FOR FURTHER INFORMATION CONTACT: Scott Distel, Project Manager, telephone: (775) 635–4093; address: 50 Bastian Road, Battle Mountain, Nevada, 89820; email: *sdistel@blm.gov.* Individuals in the United States who are deaf, deafblind, hard of hearing, or have a speech disability may dial 711 (TTY, TDD, or TeleBraille) to access telecommunications relay services. Individuals outside the United States should use the relay services offered within their country to make international calls to the point-of-contact in the United States.

SUPPLEMENTARY INFORMATION:

Purpose and Need for the Proposed Action

The BLM's purpose for the action is to respond to NGM's proposal as described in the proposed Plan of Operations and to analyze the environmental effects associated with the proponent's Proposed Action and alternatives to the Proposed Action. The BLM's need for the action is established by the BLM's responsibilities under FLPMA and the BLM Surface Management Regulations at 43 CFR part 3809 to respond to a proposed Plan of Operations.

Proposed Action and Alternatives

The *Proposed Action* would include construction, operation, reclamation, and closure of a new underground mining project in the Cortez Mining District of Lander and Eureka Counties, Nevada. The proposed mine plan boundary encompasses a total of 19,853 acres, of which 772 acres would be on private land controlled by NGM and 19,081 acres would be on public lands administered by the BLM Battle Mountain District, Mount Lewis Field Office and BLM Elko District, Tuscarora Field Office. Most of this area is within existing exploration and mine plans approved by the BLM and includes facilities and surface disturbance associated with these authorized plans. To create the new Goldrush mine plan boundary, NGM proposes boundary modifications and/or reclassification of acres within the existing NGM-controlled exploration and mine plan boundaries.

The Proposed Action would create an additional 1,658 acres of surface disturbance on public land administered by the BLM, including approximately 210 acres of exploration disturbance that could occur anywhere within the proposed Goldrush Mine Plan boundary. In addition, approximately 1,024 acres of existing authorized disturbance would be within the Proposed Action footprint, and approximately 12 acres of existing authorized disturbance would be reclassified as part of the Proposed Action.

Under the *No Action Alternative,* the development of the Goldrush Mine would not be authorized and NGM would not construct, operate, or close a new underground mine (*i.e.,* the Goldrush Mine). Modifications or reclassification of acres as proposed under the Proposed Action, and the dual use of facilities between the Cortez Mine and Goldrush Mine operations, would not occur. NGM would continue current authorized mining and exploration activities under the four separate previously approved Plans.

All authorized activities would be expected to continue under the No Action Alternative. Total authorized disturbance under the No Action Alternative is 22,433 acres and the additional disturbance from the Proposed Action would not occur. Descriptions of the anticipated impacts under the No Action Alternative are included per previously authorized NEPA analyses.

Schedule for the Decision-Making Process

The final EIS is tentatively scheduled for Fall of 2022 with a Record of Decision in early 2023.

Draft EIS Review Process

On August 10, 2021, a notice of intent to prepare an EIS was published in the **Federal Register**, announcing the beginning of the public scoping process. The BLM held virtual public scoping meetings for the Project on August 25 and 26, 2021. During the scoping period, 16 comment documents were received containing a total of 327 individual comments.

This notice of availability initiates the draft EIS review process. A public meeting to discuss the draft EIS will be held via virtual platform. An announcement regarding when and how to access the virtual meeting online will be posted on the BLM's project website. The purpose of public review of the draft EIS is to provide an opportunity for meaningful collaborative public engagement and for the public to provide substantive comments, such as identification of factual errors, data gaps, relevant methods, or scientific studies. The BLM will respond to substantive comments by making appropriate revisions to the EIS or explaining why a comment did not warrant a change.

The BLM has and will continue to use and coordinate the draft EIS review process to help fulfill the public involvement requirements under the National Historic Preservation Act (54 U.S.C. 306108) as provided in 36 CFR 800.2(d)(3). The information about historic and cultural resources within the area potentially affected by the proposed action will assist the BLM in identifying and evaluating impacts to such resources. The BLM has and will continue to conduct government-to-government consultation with Indian Tribes in accordance with Executive Order 13175 and other policies. Agencies will give due consideration to Tribal concerns, including impacts on Indian trust assets and treaty rights and potential impacts to cultural resources.

Before including your address, phone number, email address, or other personal identifying information in your comment, you should be aware that your entire comment—including your personal identifying information—may be made publicly available at any time. While you can ask us in your comment to withhold your personal identifying information from public review, we cannot guarantee that we will be able to do so.

(Authority: 40 CFR 1506.6, 40 CFR 1506.10)

Jon D. Sherve,

Field Manager, Mount Lewis Field Office, Battle Mountain District.

[FR Doc. 2022–14027 Filed 6–29–22; 8:45 am]

BILLING CODE 4310–HC–P

DEPARTMENT OF THE INTERIOR

Bureau of Land Management

[L14400000.LLAZ920000.ET0000.223.AZA–38445]

Notice of Proposed Withdrawal and Notice of Public Meetings, Arizona

AGENCY: Bureau of Land Management, Interior.

ACTION: Notice.

SUMMARY: On behalf of the Bureau of Land Management (BLM) and subject to

valid existing rights, the Secretary of the Interior proposes to withdraw 21,200 acres of public lands from all forms of appropriation under the public land laws, including location and entry under the United States mining laws, and from leasing under the mineral and geothermal leasing laws, and 800 acres of Federal surface estate public lands from appropriation under the public land laws, located in La Paz and Yuma Counties, Arizona, for up to 5 years while a land management evaluation is completed. Publication of this notice temporarily segregates the lands for a period ending on April 4, 2024, initiates a 90-day public comment period and announces that the BLM will hold public meetings on the proposed withdrawal.

DATES: Comments must be received by September 28, 2022. In addition, the BLM will host virtual public meetings addressing the requested withdrawal and the associated environmental review process. The dates and instructions for the public meetings are listed in the **SUPPLEMENTARY INFORMATION** Section.

ADDRESSES: All comments and meeting requests should be sent to the BLM Arizona State Office, 1 North Central Avenue, Suite 800, Phoenix, AZ 85004; faxed to (602) 417–9452; or sent by email to *BLM_AZ_Withdrawal_Comments@blm.gov.* The BLM will not consider comments via telephone calls.

FOR FURTHER INFORMATION CONTACT: Michael Ouellett, Realty Specialist, BLM Arizona State Office, telephone: (602) 417–9561, email at *mouellett@blm.gov;* or you may contact the BLM office at the address noted earlier. Individuals in the United States who are deaf, deafblind, hard of hearing, or have a speech disability may dial 711 (TTY, TDD, or Tele Braille) to access telecommunications relay services. Individuals outside the United States should use the relay services offered within their country to make international calls to the point-of-contact in the United States.

SUPPLEMENTARY INFORMATION: The BLM and the Department of the Army (Army) are engaged in an evaluation of the Yuma Proving Ground (YPG) expansion, identified as the Highway 95 Addition, pending processing of the Army's application for withdrawal of public land for defense purposes under the Engle Act of February 28, 1958, (43 U.S.C. 155–158). The BLM's application does not request reservation of the lands for the Army for defense purposes. This notice invites members of the public; state, local, and Tribal governments; and other stakeholders to provide the BLM with information relevant to address potential impacts to existing multiple-uses and resources from such a withdrawal, including but not limited to impacts to mineral and geothermal resources. The BLM has filed a petition/application requesting the Secretary of the Interior withdraw the following described public lands from all forms of appropriation under the public land laws, including location and entry under the United States mining laws, and from leasing under the mineral and geothermal leasing laws for up to 5 years, subject to valid existing rights:

Gila and Salt River Meridian, Arizona

(Surface and Subsurface)

T. 1 N., R. 19 W.,
Sec. 4, that part lying westerly of the westerly right-of-way of U.S. Route 95;
Secs. 5 and 8;
Sec. 9, that part lying westerly of the westerly right-of-way of U.S. Route 95;
Secs. 17 and 20;
Secs. 21 and 28, those portions lying westerly of the westerly right-of-way of U.S. Route 95;
Sec. 29;
Sec. 33, that part lying westerly of the westerly right-of-way of U.S. Route 95.
T. 2 N., R. 19 W.,
Sec. 33, S½SW¼, and S½SE¼, that part lying westerly of the westerly right-of-way of U.S. Route 95.
T. 1 S., R. 19 W.,
Secs. 4 thru 9 and Secs. 16 thru 21;
Sec. 28, that part lying westerly of the westerly right-of-way of U.S. Route 95;
Secs. 29 thru 32;
Sec. 33, that part lying westerly of the westerly right-of-way of U.S. Route 95.
T. 2 S., R. 19 W.,
Sec. 4, that part lying westerly of the westerly right-of-way of U.S. Route 95;
Secs. 5 thru 7;
Sec. 8, that part lying westerly of the westerly right-of-way of U.S. Route 95, excepting NE¼SW¼NW¼SE¼, W½SE¼NW¼SE¼, and NW¼NE¼SW¼SE¼;
Sec. 9, that part lying westerly of the westerly right-of-way of U.S. Route 95;
Sec. 17, that part lying westerly of the westerly right-of-way of U.S. Route 95, excepting S½ SW ¼;
Sec. 18;
Sec. 19, lots 1 thru 4, NW¼ NE¼, and E½NW¼;
Sec. 30, lot 1.

The areas described aggregate approximately 21,200 acres.

Additionally, the BLM's petition/application is requesting the Secretary of the Interior to withdraw the following described Federal surface estate public lands from all forms of appropriation under the public land laws for up to 5 years, subject to valid existing rights:

Gila and Salt River Meridian, Arizona

(Surface Only; Subsurface Excepted—Non-Federal Ownership)

T. 1 N., R. 19 W.,
Sec. 32.
T. 2 N., R. 19 W.,
Sec. 32, S½SW¼, and S½SE¼.

The areas described aggregate approximately 800 acres.

This petition/application has been approved for publication by the Deputy Secretary of the Interior and therefore constitutes a withdrawal proposal of the Secretary of the Interior (43 CFR 2310.1–3(e)).

The use of a rights-of-way, interagency agreement, or cooperative agreement would not adequately constrain non-discretionary uses that may result in disturbance of the lands embraced within the Highway 95 Addition.

No additional water rights are needed to fulfill the purpose of this new withdrawal.

There are no suitable alternative sites since these lands are identical to the Army's YPG Highway 95 Addition application lands.

The BLM is preparing an environmental assessment under the National Environmental Policy Act to evaluate the proposed withdrawal. Information regarding the proposed withdrawal, including environmental and other reviews, will be available at the BLM Arizona State Office and at *https://go.usa.gov/xtJKC.*

Before including your address, phone number, email address, or other personal identifying information in your comment, you should be aware that your entire comment, including your personal identifying information, may be made publicly available at any time. While you can ask us in your comment to withhold your personal identifying information from public review, we cannot guarantee that we will be able to do so.

Notice is hereby given for public meetings in connection with the proposed withdrawal. In response to the coronavirus (COVID–19) pandemic in the United States, and the U.S. Centers for Disease Control and Prevention recommendations for social distancing and avoidance of large public gatherings, the BLM will not hold in-person public meetings for this action. The BLM will host the public meetings online and by telephone. There will be online public meetings scheduled for September 20, 2022 at 3 p.m. and September 21, 2022, at 5 p.m. Mountain Standard Time. The BLM will publish the instructions on how to access the online meetings in the *Yuma Sun* (Yuma), *Bajo El Sol* (Yuma), and *Desert Messenger* (Quartzsite) newspapers at a minimum of 15 days prior to the

meeting and on the website: *https://go.usa.gov/xtJKC*.

For a period until April 4, 2024, the 21,200 acres of Federal surface and subsurface estate public lands specified above will be segregated from all forms of appropriation under the public land laws, including location and entry under the United States mining laws, and from leasing under the mineral and geothermal leasing laws, subject to valid existing rights, and the 800 acres of Federal surface estate public lands specified above will be segregated from appropriation under the public land laws, subject to valid existing rights, unless the application is denied or canceled, or the withdrawal is approved prior to that date. Licenses, permits, cooperative agreements, or discretionary land-use authorizations of a temporary nature may be allowed with the approval of an authorized officer of the BLM during the segregation period.

This application will be processed in accordance with the regulations set-forth in 43 CFR 2300.

(Authority: 43 U.S.C. 1714(b)(1) and 43 CFR 2300)

Raymond Suazo,

Arizona State Director.

[FR Doc. 2022–14032 Filed 6–29–22; 8:45 am]

BILLING CODE 4310–32–P

DEPARTMENT OF THE INTERIOR

Bureau of Land Management

[LLNVW03500.L51050000.EA0000. LVRCF2208690.241A.22XL5017AP MO#4500162447]

Temporary Closure and Temporary Restrictions of Specific Uses on Public Lands for the 2022 Burning Man Event (Permitted Event), Pershing County, NV

AGENCY: Bureau of Land Management, Interior.

ACTION: Notice of temporary closure and restrictions.

SUMMARY: Under the authority of the Federal Land Policy and Management Act of 1976, as amended (FLPMA), the Bureau of Land Management (BLM) Winnemucca District, Black Rock Field Office, will implement a temporary closure and temporary restrictions to protect public safety and resources on public lands within and adjacent to the Burning Man event on the Black Rock Desert playa.

DATES: The temporary closure and temporary restrictions will be in effect from 12:01 a.m. July 28, 2022, to midnight October 1, 2022 (66 Days).

FOR FURTHER INFORMATION CONTACT: Mark E. Hall, Field Manager, BLM Black Rock Field Office, Winnemucca District, 5100 E Winnemucca Blvd., Winnemucca, NV 89445–2921; telephone: (775) 623–1500; email: *mehall@blm.gov.*

Individuals in the United States who are deaf, deafblind, hard of hearing, or have a speech disability may dial 711 (TTY, TDD, or TeleBraille) to access telecommunications relay services. Individuals outside the United States should use the relay services offered within their country to make international calls to the point-of-contact in the United States.

The TTY is available 24 hours a day, 7 days a week, to leave a message or question with the above individual. You will receive a reply during normal hours.

SUPPLEMENTARY INFORMATION: The temporary closure and temporary restrictions affect public lands within and adjacent to the Burning Man event permitted on the Black Rock Desert playa within the Black Rock Desert-High Rock Canyon Emigrant Trails National Conservation Area in Pershing County, Nevada. The temporary closure of public lands will be conducted in two phases to limit impacts on the general public outside of the Burning Man event. Phase 1 will encompass a smaller temporary closure area during the building and tear-down of Black Rock City and Phase 2 will encompass the larger, temporary closure area during the event itself. Phase 2 includes all of the Phase 1 area. This year's Phase 2 temporary closure area is larger than previous closure areas for the Burning Man event.

The legal description of the affected public lands in the temporary public closure area of both stages is Mount Diablo Meridian, Nevada:

Phase 1, being the smaller area of 9,570 acres, will be effective for 26 days, from 12:01 a.m. on Thursday, July 28, 2022, until 6:00 a.m. on Monday, August 22, 2022. Phase 1 will resume at 6:00 a.m. Friday, September 23, 2022, through 11:59 p.m. on Saturday, October 1, 2022.

Phase 1:

Mount Diablo Meridian, Nevada

T. 33 N., R. 24 E., unsurveyed,
Sec. 1, those portions of the N½ lying northwesterly of the playa access road;
Sec. 2, N½ and SW¼;
Sec. 3;
Secs. 4 and 5, those portions lying southeasterly of Washoe County Road 34;
Sec. 9, N½.

T. 33½ N., R. 24 E., unsurveyed,
Secs. 25 and 26;
Secs. 27, 33, and 34, those portions lying southeasterly of West Playa Highway;
Secs. 35 and 36.

T. 34 N., R. 24 E., partly unsurveyed,
Sec. 25;
Secs. 26 and 27, those portions lying southeasterly of West Playa Highway;
Sec. 34, those portions of the E½ lying southeasterly of West Playa Highway;
Secs. 35 and 36.

T. 34 N., R. 25 E., unsurveyed,
Sec. 16, SW¼SW¼;
Sec. 21;
Sec. 27, W½NW¼ and W½SW¼;
Sec. 28;
Sec. 33, N½ and SW¼;
Sec. 34, W½NW¼.

The area described contains 9,570 acres, more or less, according to the BLM National Public Land Survey System Cadastral National Spatial Data Infrastructure (PLSS CadNSDI) dataset, the protraction diagrams, and the official plats of the surveys of the said lands, on file with the BLM.

Phase 2, being the larger area of 120,270 acres, includes all of Phase 1 and will be effective for 33 days from 6:00 a.m. on Monday, August 22, 2022, until 6:00 a.m. on Friday, September 23, 2022.

Phase 2:

Mount Diablo Meridian, Nevada

T. 33 N., R. 23 E.,
Sec. 25, NE¼NE¼, S½NE¼, SE¼NW¼, NE¼SW¼, S½SW¼, and SE¼;
Sec. 26, S½SE¼;
Sec. 35, NE¼, SE¼NW¼, N½NE¼SW¼, N½NW¼SW¼, N½NE¼SE¼, and N½NW¼SE¼;
Sec. 36, N½, N½NE¼SW¼, N½NW¼SW¼, N½NE¼SE¼, and N½NE¼SE¼.

T. 33 N., R. 24 E., unsurveyed,
Secs. 1 thru 3;
Sec. 4, those portions lying southeasterly of Washoe County Road 34;
Sec. 5;
Sec. 8, S½SW¼ and E½;
Secs. 9 thru 12;
Secs. 14 thru 17;
Sec. 18, SE¼NE¼, S½SW¼, and SE¼;
Secs. 19 and 20;
Sec. 21, excepting M.S. No. 4800;
Sec. 29, N½;
Sec. 30, N½.

T. 33 ½ N., R. 24 E., unsurveyed,
Secs. 25 thru 27;
Secs. 28, 29, and 33, those portions lying easterly and northeasterly of Washoe County Road 34;
Secs. 34 thru 36.

T. 34 N., R. 24 E., partly unsurveyed,
Secs. 1, 12, and 13;
Sec. 23, S½;
Secs. 24 thru 26;
Sec. 27, E½NE¼, E½SW¼, and SE¼;
Sec. 32, those portions of the SE¼ lying northeasterly of Washoe County Road 34;
Sec. 33, NE¼NE¼, S½NE¼, those portions of the SW¼ lying northeasterly of Washoe County Road 34, and SE¼;
Secs. 34 thru 36.

T. 35 N., R. 24 E.,
Secs. 13, 24, 25, and 36.
T. 33 N., R. 25 E.,
Secs. 2, 3, and 4, those portions lying northwesterly of the Black Rock Desert, High Rock Canyon National Conservation Area boundary.
T. 34 N., R. 25 E., unsurveyed,
Secs. 1 thru 4;
Secs. 9 thru 16;
Secs. 21 thru 28;
Secs. 33 and 34;
Secs. 35 and 36, those portions lying northwesterly of the Black Rock Desert, High Rock Canyon National Conservation Area boundary.
T. 35 N., R. 25 E., unsurveyed.
T. 34 N., R. 26 E., unsurveyed,
Secs. 1 thru 12;
Secs. 13 and 14, those portions lying northwesterly of the Black Rock Desert, High Rock Canyon National Conservation Area boundary;
Secs. 15 thru 20;
Secs. 21 thru 23, those portions lying northwesterly of the Black Rock Desert, High Rock Canyon National Conservation Area boundary;
Secs. 28 thru 31, those portions lying northwesterly of the Black Rock Desert, High Rock Canyon National Conservation Area boundary;
T. 35 N., R. 26 E., unsurveyed.
T. 34 N., R. 27 E., unsurveyed,
Secs. 2 thru 4, those portions lying northwesterly of the Black Rock Desert, High Rock Canyon National Conservation Area boundary;
Secs. 5 and 6;
Secs. 7 thru 9, those portions lying north of the Black Rock Desert, High Rock Canyon National Conservation Area boundary;
Sec. 18, those portions lying northwesterly of the Black Rock Desert, High Rock Canyon National Conservation Area boundary.
T. 35 N., R. 27 E., unsurveyed,
Secs. 1 thru 34;
Secs. 35 and 36, those portions lying northwesterly of the Black Rock Desert, High Rock Canyon National Conservation Area boundary.

The area described contains 120,270 acres, more or less, according to the BLM National PLSS CadNSDI, the protraction diagrams, and the official plats of the surveys of the said lands, on file with the BLM.

The two-phase temporary closure area is in Pershing County, Nevada, and is necessary for the period of time from July 28, 2022, to midnight October 1, 2022, because of the Burning Man event. The event's activities begin with the golden spike, fencing the site perimeter, Black Rock City setup (July 28 to August 26), followed by the actual event (12:01 a.m. on August 27 to 12:00 p.m. on September 6), Black Rock City tear down and cleanup, and final site cleanup (12:01 p.m. on September 6 to 11:59 p.m. on October 1). This event is authorized on public land under Special Recreation Permit #NVW03500–22–01.

The public temporary closure area comprises about 77 percent of the Black Rock Desert playa. Public access to the other 23 percent of the playa outside the temporary closure area will remain open to dispersed recreational use.

The event area is fully contained within the Phase 2 temporary closure area. The event area is defined as the portion of the temporary closure area that: (1) Is entirely contained within the event perimeter fence, including 50 feet from the outside of the event perimeter fence; (2) Lies within 25 feet from the outside edge of the event access road; and (3) Includes the entirety of the aircraft parking area outside the event perimeter fence.

The temporary closure and restrictions are necessary to provide a safe environment for the staffs/volunteers, participants and members of the public visiting the Black Rock Desert, and to protect public land resources by addressing law enforcement and public safety concerns associated with the event. The temporary closure and temporary restrictions are also necessary to enable BLM law enforcement personnel to provide for public safety and to protect the public lands.

The event attracts up to 87,000 participants to a remote, rural area, located more than 90 miles from urban infrastructure and support, including such services as public safety, emergency medical delivery, transportation, and communication. During the event, Black Rock City, the temporary city associated with the event, becomes one of the largest population areas in Nevada.

A temporary closure and restrictions order, under the authority of 43 CFR 8364.1, is appropriate for a single event. The temporary closure and restrictions are specifically tailored to the time frame that is necessary to provide a safe environment for the public and for participants at the Burning Man event and to protect public land resources while avoiding imposing restrictions that may not be necessary in the area during the remainder of the year.

The BLM will post copies of the temporary closure, temporary restrictions, and an associated map in kiosks at access points to the Black Rock Desert playa, as well as at the Gerlach Post Office, Bruno's Restaurant, Empire Store, Burning Man Project Offices, Friends of Black Rock-High Rock Office, the BLM-Nevada Black Rock Station near Gerlach, and the BLM-California Applegate Field Office. The BLM will also make the materials available on the BLM external web page at: *http://www.blm.gov.*

In addition to the Nevada Collateral Forfeiture and Bail Schedule as authorized by the United States District Court, District of Nevada and under the authority of Section 303(a) of FLPMA, 43 CFR 8360.0–7, and 43 CFR 8364.1, the BLM will enforce a temporary public closure and the following temporary restrictions will apply within and adjacent to the Burning Man event on the Black Rock Desert playa from July 28, 2022, through October 1, 2022:

Temporary Restrictions

A. Environmental Resource Management and Protection

(1) Fires/Campfires: The ignition of fires on the surface of the Black Rock Desert playa without a burn blanket or burn pan is prohibited. Campfires may only be burned in containers that are sturdily elevated six (6) inches above the playa surface and in a manner that does not pose a risk of fire debris falling onto the playa surface. Plastic and nonflammable materials may not be burned in campfires. The ignition of fires other than a campfire is prohibited. This restriction does not apply to events sanctioned and regulated as art burns by the event organizer.

(2) Fireworks: The use or possession of personal fireworks is prohibited except for uses of fireworks approved by the permit holder and used as part of a Burning Man sanctioned art burn event.

(3) Grey and Black Water Discharge: The discharge and dumping of grey water onto the playa/ground surface is prohibited. Grey water is defined as water that has been used for cooking, washing, dishwashing, or bathing and/or contains soap, detergent, or food scraps/residue, regardless of whether such products are biodegradable or have been filtered or disinfected. Black water is defined as wastewater containing feces, urine, and/or flush water.

(4) Human Waste: The depositing of human waste (liquid and/or solid) on the playa/ground surface is prohibited.

(5) Trash: The discharge of any and all trash/litter onto the ground/playa surface is prohibited. All event participants must pack out and properly dispose of all trash at an appropriate disposal facility.

(6) Hazardous Materials: The dumping or discharge of vehicle oil, petroleum products or other hazardous household, commercial or industrial refuse or waste onto the playa surface is prohibited. This applies to all recreational vehicles, trailers, motorhomes, port-a-potties, generators, and other camp infrastructure.

(7) Fuel Storage:

(a) The storage of greater than 110 gallons of fuel in a single camp is prohibited.

(b) Each camp storing fuel must establish a designated fuel storage area at least ten (10) feet apart from combustible materials; twenty-five (25) feet from vehicles, camp trailers/RV's, generators (unless manufactured and designed to store fuel), and any sources of ignition (such as burning cigarettes, open flame, electrical connections, or trailer/RV appliances); and one hundred (100) feet from other designated fuel storage areas.

(c) Fuel containers, regardless of size or type, shall not exceed 80% capacity per container.

(d) Storage areas for ALL fuel must include a secondary containment system that can hold a liquid volume equal to or greater than 110% of the largest container being stored. Secondary containment measures must comply with the following:

(i) The secondary containment system must be free of cracks or gaps and constructed of materials impermeable to the fuel(s) being stored.

(ii) The secondary containment system must be designed to allow the removal of any liquids captured resulting from leaks, spills, or precipitation.

(8) Water Discharge: The unauthorized dumping or discharge of fresh water onto the playa surface, onto city streets and/or other public areas, or onto camp electric systems in a manner that creates a hazard or nuisance is prohibited. This provision does not prohibit the use of water trucks contracted by the event organizer to provide dust abatement measures.

B. Commercial Activities

In accordance with 43 CFR 2932: Vending and the 2022 Special Recreation Permit Additional Stipulations for the permitted event, ALL vendors and air carrier services must provide proof of authorization to operate at the event issued by the permitting agency and/or the permit holder upon request. Failure to provide such authorization could result in eviction from the event.

C. Aircraft Landing

(1) The public closure area is closed to aircraft landing, taking off, and taxiing. Aircraft is defined in Title 18, U.S.C. 31 (a)(1) and includes lighter-than-aircraft and ultra-light craft. The following exceptions apply:

(a) All aircraft operations, including ultra-light and helicopter landings and takeoffs, will occur at the designated 88NV Black Rock City Airport landing strips and areas defined by airport management. All takeoffs and landings will occur only during the hours of operation (6:00 a.m. through 6:00 p.m.) of the airport as described in the Burning Man Operating Plan. All pilots that use the Black Rock City Airport must agree to and abide by the published airport rules and regulations;

(b) Only fixed wing and helicopters providing emergency medical services may land at the designated Emergency Medical Services areas/pads or at other locations when required for medical incidents.

The BLM authorized officer, or an authorized State/Local Law Enforcement Officer or his/her delegated representative may approve other helicopter landings and takeoffs when deemed necessary for the benefit of the law enforcement operation; and

(c) Landings or takeoffs of lighter-than-air craft previously approved by the BLM authorized officer.

D. Alcohol/Prohibited Substance

(1) Possession of an open container of an alcoholic beverage by the driver or operator of any motorized vehicle, whether or not the vehicle is in motion, is prohibited.

(2) Possession of alcohol by minors:

(a) The following are prohibited:

(i) Consumption or possession of any alcoholic beverage by a person under 21 years of age on public lands; and

(ii) Selling, offering to sell, or otherwise furnishing or supplying any alcoholic beverage to a person under 21 years of age on public lands.

(3) Definitions:

(a) Open container: Any bottle, can, or other container which contains an alcoholic beverage, if that container does not have a closed top or lid for which the seal has not been broken. If the container has been opened one or more times, and the lid or top has been replaced, that container is an open container.

(b) Possession of an open container includes any open container that is physically possessed by the driver or operator or is adjacent to and reachable by that driver or operator. This includes, but is not limited, to containers in a cup holder or rack adjacent to the driver or operator, containers on a vehicle floor next to the driver or operator, and containers on a seat or console area next to a driver or operator.

E. Drug Paraphernalia

(1) The possession of drug paraphernalia is prohibited.

(a) Definition: Drug paraphernalia means all equipment, products, and materials of any kind which are used, intended for use, or designed for use in planting, propagating, cultivating, growing, harvesting, manufacturing, compounding, converting, producing, preparing, testing, analyzing, packaging, repackaging, storing, containing, concealing, injecting, ingesting, inhaling, or otherwise introducing into the human body a controlled substance in violation of any state or Federal law, or regulation issued pursuant to law.

F. Disorderly Conduct

(1) Disorderly conduct is prohibited.

(2) Definition: Disorderly conduct means that an individual, with the intent of recklessly causing public alarm, nuisance, jeopardy, or violence; or recklessly creating a risk thereof:

(a) Engages in fighting or violent behavior;

(b) Uses language, an utterance or gesture, or engages in a display or act that is physically threatening or menacing or done in a manner that is likely to inflict injury or incite an immediate breach of the peace.

(c) Obstructs, resists, or attempts to elude a law enforcement officer, or fails to follow their orders or directions.

G. Eviction of Persons

(1) The public closure area is closed to any person who:

(a) Has been trespassed from the event by the permit holder;

(b) Has been evicted from the event by the BLM;

(c) Has been ordered by a law enforcement officer to leave the area of the permitted event.

(2) Any person evicted from the event forfeits all privileges to be present within the perimeter fence or anywhere else within the public closure area even if they possess a ticket to attend the event.

H. Motor Vehicles

(1) Must comply with the following requirements:

(a) The operator of a motor vehicle must possess a valid driver's license.

(b) Motor vehicles and trailers must possess evidence of valid registration, except for mutant vehicles, or other vehicles registered with the permitted event organizers and operated within the scope of that registration.

(c) Motor vehicles must possess evidence of valid insurance, except for mutant vehicles or other vehicles registered with the permitted event organizers and operated within the scope of that registration.

(d) Motor vehicles and trailers must not block a street used for vehicular travel or a pedestrian pathway.

(e) Motor vehicles must not exceed the posted or designated speed limits. Posted or designated speed limits also apply to: motorized skateboards, hover boards, electric assist bicycles, and Go-Peds with handlebars.

(f) No person shall occupy a trailer while the motor vehicle is in transit upon a roadway, except for mutant vehicles, or other vehicles registered with the permitted event organizers and operated within the scope of that registration.

(g) During night hours, from a half-hour after sunset to a half-hour before sunrise, motor vehicles, other than a motorcycle or golf cart, must be equipped with at least two working headlamps and at least two functioning tail lamps, except for mutant vehicles or other vehicles registered with the permitted event organizers and operated within the scope of that registration, so long as they are adequately lit according to Burning Man Project's Department of Mutant Vehicle requirements.

(h) Motor vehicles, including motorcycles or golf carts, must display a red, amber, or yellow light brake light visible to the rear in normal sunlight upon application of the brake, except for mutant vehicles, or other vehicles registered with the permitted event organizers and operated within the scope of that registration, so long as they are adequately lit according to Burning Man Project's Department of Mutant Vehicle requirements.

(i) Motorcycles or golf carts require only one working headlamp and one working taillight during night hours, from a half-hour after sunset to a half-hour before sunrise unless registered with the permitted event organizers and operated within the scope of that registration, so long as they are adequately lit according to Burning Man Project's Department of Mutant Vehicle requirements.

(j) Trailers pulled by motor vehicles must be equipped with at least two functioning tail lamps and at least two functioning brake lights.

(2) The public closure area is closed to motor vehicle use, except as provided below. Motor vehicles may be operated within the public closure area under the circumstances listed below:

(a) Participant arrival and departure on designated routes;

(b) BLM, medical, law enforcement, and firefighting vehicles are authorized at all times;

(c) Vehicles, mutant vehicles, or art cars operated by the permit holder's staff or contractors and service providers on behalf of the permit holder are authorized at all times. These vehicles must display evidence of event registration in such manner that it is visible to the rear of the vehicle while the vehicle is in motion;

(d) Vehicles used by disabled drivers and displaying official state disabled driver license plates or placards; or mutant vehicles and art cars, or other vehicles registered with the permit holder must display evidence of registration at all times in such manner that it is visible to the rear of the vehicle while the vehicle is in motion;

(e) Participant drop-off of approved burnable material and wood to the Burn Garden/Wood Reclamation Stations (located on open playa at 3:00, 6:00, 9:00 Promenades and the Man base) from 10:00 a.m. Sunday through the end of day Tuesday, post event;

(f) Passage through, without stopping, the public closure area on the west or east playa roads or from the east side of the playa to the west and vice versa to traverse the entirety of the playa surface.

(g) Support vehicles for art vehicles, mutant vehicles, and theme camps will be allowed to drive to and from fueling stations.

(3) Definitions:

(a) A motor vehicle is any device designed for and capable of travel over land and which is self-propelled by a motor but does not include any vehicle operated on rails or any motorized wheelchair.

(b) Motorized wheelchair means a self-propelled wheeled device, designed solely for and used by a mobility-impaired person for locomotion.

(c) ''Trailer'' means every vehicle without motive power designed to carry property or passengers wholly on its own structure and to be drawn by a motor vehicle. This includes camp trailers, pop-up trailers, 4′×7′ or larger flatbed trailers, enclosed cargo trailers, or RV style trailers.

I. Public Camping

(1) The public closure area is closed to public camping with the following exceptions:

(a) The permitted event's ticket holders who are camped in designated event areas provided by the permit holder.

(b) Ticket holders who are camped in the authorized pilot camp.

(c) The permit holder's authorized staff, contractors, and BLM authorized event management camps.

(d) Individuals or groups who have been permitted by the BLM.

J. Public Use

(1) The public closure area is closed to entry and use by members of the public unless that person:

(a) Is traveling through, without stopping, the public closure area on the west or east playa roads;

(b) Possesses a valid ticket to attend the event;

(c) Is an employee or authorized volunteer with the BLM, a law enforcement officer, emergency medical service provider, fire protection provider, or another public agency employee working at the event and that individual is assigned to the event;

(d) Is a person working at or attending the event on behalf of the permit holder; or is authorized by the permit holder to be onsite prior to the commencement of the event for the primary purpose of constructing, creating, designing, or installing art, displays, buildings, facilities, or other items and structures in connection with the event; or

(e) Is an employee of a commercial operation contracted to provide services to the event organizers and/or participants authorized by the permit holder through a contract or agreement and authorized by BLM through a Special Recreation Permit.

K. Lasers

(1) The possession and or use of handheld lasers is prohibited.

(2) Definition:

(a) A laser means any hand-held laser beam device or demonstration laser product that emits a single point of light amplified by the stimulated emission of radiation that is visible to the human eye.

L. Weapons

(1) For public health and safety reasons, the possession or discharge of any weapon is prohibited between the dates of August 26, 2022, and September 7, 2022, in the Phase 2 closure area, with three exceptions:

(a) Unloaded weapons may be carried within motor vehicles that are passing through, without stopping, the Phase 2 closure area on designated playa routes;

(b) County, state, Tribal, and Federal law enforcement personnel who are working in their official capacity at the event are not prohibited from possessing or discharging weapons; and

(c) Art that includes weapons will be allowed only after receipt of authorization from both the special recreation permit holder and the BLM authorized officer.

(2) Definitions:

(a) Weapon means a firearm, compressed gas or spring powered pistol or rifle, bow and arrow, cross bow, blowgun, spear gun, hand-thrown spear, sling shot, irritant gas device, electric stunning or immobilization device, explosive device, any

implement designed to expel a projectile, switch-blade knife, any blade which is greater than 10 inches in length from the tip of the blade to the edge of the hilt or finger guard nearest the blade (*e.g.,* swords, dirks, daggers, machetes), or any other weapon the possession of which is prohibited by state law. Exception: This rule does not apply in a kitchen or cooking environment or where an event worker is wearing or utilizing a construction knife for their duties at the event.

(b) Firearm means any pistol, revolver, rifle, shotgun, or other device, which is designed to, or may be readily converted to expel a projectile by the ignition of a propellant.

(c) Discharge means the expelling of a projectile from a weapon or the ignition of a propellant.

(d) Discharge means the expelling of a projectile from a weapon.

M. Enforcement

Any person who violates this temporary closure or any of these temporary restrictions may be tried before a United States Magistrate and fined in accordance with 18 U.S.C. 3571, imprisoned no more than 12 months under 43 U.S.C. 1733(a) and 43 CFR 8360.0–7, or both. In accordance with 43 CFR 8365.1–7, State or local officials may also impose penalties for violations of Nevada law.

Authority: 43 CFR 8364.1.

Mark Hall,

Field Manager, Black Rock Field Office, Winnemucca District.

[FR Doc. 2022–14022 Filed 6–29–22; 8:45 am]

BILLING CODE 4310–HC–P

DEPARTMENT OF THE INTERIOR

Bureau of Land Management

[LLNVC01000.L19200000.ET0000; LRORF1911800; MO#4500160540]

Public Land Order No. 7909; Extension of Public Land Order No. 7873; Withdrawal for Land Management Evaluation Purposes, and Correction of Legal Land Description; Nevada

AGENCY: Bureau of Land Management, Interior.

ACTION: Public land order.

SUMMARY: This order extends the duration of the withdrawal created by Public Land Order (PLO) No. 7873 for an additional 4-year term. The withdrawal created by PLO No. 7873 expires on August 23, 2022. This order continues the withdrawal of 694,838.84 acres of public land in Churchill, Lyon, Mineral, Nye, and Pershing Counties, Nevada from all forms of appropriation under the public land laws, including location and entry under the United States mining laws, and leasing under the mineral and geothermal leasing laws, subject to valid existing rights, for 4 years for land management evaluation purposes. In addition, 68,809.44 acres of Federal land in the Dixie Valley area (Churchill County, Nevada) continues to be withdrawn from leasing under the mineral leasing laws. Including the 8,722.47 acres of Department of the Navy (DON) lands, the total Federal land continue to be withdrawn by this Public Land Order is 772,370.75 acres. Non-Federal lands totaling 66,160.53 acres are described within the withdrawal area. Any current or future Federal estate interest in these non-Federal lands is subject to this withdrawal. Additionally, this Order corrects a portion of the legal land description published in the **Federal Register** on August 31, 2018.

DATES: This PLO takes effect on August 23, 2022.

FOR FURTHER INFORMATION CONTACT: Colleen Dingman, BLM, Carson City District Office, (775) 885–6168; address: 5665 Morgan Mill Road, Carson City, NV 89701; email: *cjdingman@blm.gov.* Individuals in the United States who are deaf, deafblind, hard of hearing, or have a speech disability may dial 711 (TTY, TDD, or TeleBraille) to access telecommunications relay services. Individuals outside the United States should use the relay services offered within their country to make international calls to the point-of-contact in the United States.

SUPPLEMENTARY INFORMATION:

Federal Register Correction

In the **Federal Register** of August 31, 2018 (83 FR 44654), on page 44657, in the third column, correct Sec. 24 to read as follows:

Sec. 24, those portions of lots 1 and 2 lying north of the southerly line of a dirt road, and lots 3 thru 6, and 11 thru 14.

Extension of Duration of Withdrawal

PLO No. 7873 withdrew 694,838.84 acres of Federal land in Churchill, Lyon, Mineral, Nye, and Pershing Counties, Nevada, for up to 4 years from all forms of appropriation under the public land laws, including location and entry under the United States mining laws, and leasing under the mineral and geothermal leasing laws, subject to valid existing rights. The purpose of this withdrawal extension is to maintain the current environmental baseline, relative to mining, mineral exploration and development, and geothermal energy development for land management evaluation purposes. The extension of PLO No. 7873 includes 68,809.44 acres of Federal land in the Dixie Valley Training Area from the mineral leasing laws (not currently withdrawn from these laws under Section 3016 of the NDAA for Fiscal Year 2000, Pub. L. 106–65), to maintain the current environmental baseline, relative to mineral exploration and development for land management evaluation purposes, subject to valid existing rights.

Including the 8,722.47 acres of Department of the Navy (DON) lands, the total Federal land included in the withdrawal extension is 772,370.75 acres. Non-Federal lands totaling 66,160.53 acres are described within the withdrawal area. Any current or future Federal estate interest in these non-Federal lands is subject to this withdrawal.

The purpose for which the withdrawal was first made requires this extension because the BLM and the DON are engaged in the evaluation of issues relating to possible future legislative transfer of the subject land to the jurisdiction of the DON in connection with the DON's modernization of Naval Air Station Fallon, Fallon Range Training Complex, Nevada (FRTC). The DON anticipates requesting a legislative withdrawal of these additional lands and requested that the Department of the Interior extend PLO No. 7873 withdrawal an additional 4 years. PLO No. 7873 is incorporated by reference (83 FR 44654).

Order

By virtue of the authority vested in the Secretary of the Interior by Section 204 of the Federal Land Policy and Management Act of 1976, 43 U.S.C. 1714, it is ordered as follows:

1. Subject to valid existing rights, PLO No. 7873, which withdrew 694,838.84 acres of public land from all forms of appropriation under the public land laws and 68,809.44 acres of Federal land in the Dixie Valley area from leasing under the mineral leasing laws, including the 8,722.47 acres of Department of the Navy (DON) lands, totaling 772,370.75 acres of Federal land is hereby extended for an additional 4-year period. Non-Federal lands totaling 66,160.53 acres are described within the withdrawal area. Any current or future Federal estate interest in these non-Federal lands is subject to this withdrawal extension.

2. The withdrawal extended by this order will expire on August 23, 2026,

unless, as a result of review conducted before the expiration date pursuant to Section 204(f) of the Federal Land Policy and Management Act of 1976, 43 U.S.C. 1714 (f), the Secretary determines that the withdrawal shall be further extended.

(Authority: 43 U.S.C. 1714)

Tanya Trujillo,

Assistant Secretary for Water and Science.

[FR Doc. 2022–13430 Filed 6–29–22; 8:45 am]

BILLING CODE 4310–HC–P

DEPARTMENT OF THE INTERIOR

Bureau of Land Management

[223–LLCOS01000–L11700000.PI0000–LXSIWILD0000]

Notice of Temporary Seasonal Closure of Public Lands in La Plata and Montezuma Counties, CO

AGENCY: Bureau of Land Management, Interior.

ACTION: Notice of temporary closure.

SUMMARY: Notice is hereby given that a temporary closure to all forms of entry will be in effect seasonally for certain public lands administered by the Bureau of Land Management (BLM), Tres Rios Field Office in La Plata and Montezuma Counties, Colorado. The temporary closure is necessary to protect critical wildlife habitat and minimize stress to wintering mule deer and elk and nesting raptors.

DATES: In the Durango area of La Plata County, the temporary closure of BLM-administered lands identified as critical winter wildlife habitat will be in effect annually from 12:01 a.m. on December 1 through 11:59 p.m. on April 15, with possible extension through April 30 if conditions warrant. The temporary closure of BLM-administered lands identified as critical raptor habitat will be in effect annually from 12:01 a.m. on March 15 through 11:59 p.m. on July 31.

In the Cortez area of Montezuma County, the temporary closure of BLM-administered lands identified as critical winter wildlife habitat will be in effect annually from 12:01 a.m. on December 1 through 11:59 p.m. on April 30.

All times noted are local.

The temporary seasonal closures take effect on August 1, 2022 and will expire 30 days after publication in the **Federal Register** of a final supplementary rule implementing the 2015 Tres Rios Field Office Resource Management Plan (RMP).

ADDRESSES: The temporary closure order, maps of the affected areas, and documents associated with the temporary closure order will be made available and posted at the Tres Rios Field Office, 29211 Highway 184, Dolores, CO 81323.

FOR FURTHER INFORMATION CONTACT: Tyler Fouss, Field Staff Ranger; 29211 Highway 184, Dolores, CO 81323; telephone: (970) 882–1131; email: *tfouss@blm.gov.*

Individuals in the United States who are deaf, deafblind, hard of hearing, or have a speech disability may dial 711 (TTY, TDD, or TeleBraille) to access telecommunications relay services to contact Tyler Fouss. Individuals outside the United States should use the relay services offered within their country to make international calls to the point-of-contact in the United States.

SUPPLEMENTARY INFORMATION: The need for these temporary seasonal closures is identified in the record of decision for the Tres Rios Field Office RMP and the supporting environmental impact statement (EIS). The BLM affirmed that its environmental analysis conducted in that EIS adequately informed, under the National Environmental Policy Act (NEPA), the decision regarding these temporary closures in La Plata County. That determination of NEPA adequacy is contained in the worksheet titled ''Seasonal Wildlife Area Closures on Public Lands in La Plata County, Colorado'' (DOI–BLM–CO–S010–2020–0006–DNA). BLM conducted additional site-specific analysis of the effects of the Cortez area closures in an environmental assessment for the Tres Rios Field Office entitled, ''Transportation and Access Plan, Travel Area 1: Archuleta, La Plata and Montezuma Counties'' (DOI–BLM–CO–S010–2018–0013–EA).

I. Durango Area Closures

In 1971, the BLM and Colorado Parks and Wildlife (CPW) identified the need to preserve critical winter range to minimize adverse impacts and prevent disturbance to wintering elk and mule deer. The BLM purchased land on Animas City Mountain from The Nature Conservancy and entered into a joint plan with CPW for managing Animas City Mountain and the Perins Peak Wildlife Management Area. Perins Peak was also identified as critical nesting habitat for peregrine falcons. In 1999, the BLM and CPW identified a similar need to manage for critical winter range within the Grandview Ridge Recreation Management Zone (RMZ) and developed a management plan for the Durango Special Recreation Management Area (SRMA).

II. Cortez Area Closures

The BLM designated the Cortez SRMA during revision of the Tres Rios Field Office RMP. The RMP identifies the need for annual seasonal closures in the Chutes-n-Ladders, Summit, and Aqueduct areas of the Montezuma Triangle RMZ within the Cortez SRMA. These areas provide critical winter range for elk and mule deer and are identified in the Colorado action plan for implementation of Department of the Interior Secretary's Order 3362, ''Improving Habitat Quality in Western Big-Game Winter Range and Migration Corridors'' (2018). When the BLM developed the SRMA, it implemented seasonal wildlife closures as a mitigation measure in response to the designation of elk and mule deer critical winter range in the Cortez SRMA.

Description of Closed Areas: This temporary closure affects the following BLM-administered public lands within the Tres Rios Field Office in La Plata County, Colorado: Animas City Mountain and Grandview Ridge RMZs within the Durango SRMA and the Perins Peak Wildlife Management Area; and in Montezuma County, Colorado: Aqueduct, Chutes and Ladders, and Summit areas of the Montezuma Triangle RMZ within the Cortez SRMA.

The legal description of affected public lands is as follows:

Grandview Ridge RMZ

New Mexico Principal Meridian, Colorado

T. 34 N., R. 9 W., North of the Ute Line
Sec. 3, lots 5 thru 13, and SE¼NW¼;
Sec. 4, lots 5 thru 12;
Sec. 9, lots 1, 2, 4 and 5;
Sec. 10, NW¼NW¼.
T. 34.5 N., R. 9 W.,
Sec. 34.
T. 35 N., R. 9 W.,
Sec. 26, SE¼NE¼, SE¼SW¼, and W½SE¼;
Sec. 34, lots 8, 9, 13, 14 and 15;
Sec. 35, W½NW¼.

The Carbon Junction Trail will remain open to its intersections with the South Rim and Sidewinder Trails. The Crites Connection Trail will remain open from its intersection with the Carbon Junction Trail to its intersection with the Telegraph Trail. The BLM will post signs at the Carbon Junction Trailhead indicating the extent of the closure area boundary and at each closed intersection indicating the points where the closure area begins.

Animas City Mountain RMZ

New Mexico Principal Meridian, Colorado

T. 35 N., R. 9 W.,
Sec. 4, S½NW¼ and SW¼;
Sec. 5, S½NE¼ and S½;
Sec. 6, lot 18;

Sec. 7, lots 10 and 14;
Sec. 8, lots 1 and 2, parcel A, W½NE¼, NW¼, N½SW¼, N½SE¼, and SW¼SE¼;
Sec. 9, lots 2 thru 6;
Sec. 17, parcel A and N½NW¼NE¼.

Users can access the 1.5-mile loop trail on the lower portion of Animas City Mountain via the trailheads at either Birkett Drive or West 32nd Street/West 4th Avenue. The BLM will post signs at the bottom of the loop indicating the extent of the closure area boundary and at the top of the open loop indicating the points where the closure area begins.

Perins Peak Wildlife Management Area

New Mexico Principal Meridian, Colorado

T. 35 N., R. 9 W.,
Sec. 7, lot 10 and 14;
Sec. 18, lots 9, 10 and 11, SE¼NW¼, and NE¼SW¼;
Sec. 19, lots 5, 6 and 7.
T. 35 N., R. 10 W.,
Sec. 2, E½SE¼;
Sec. 3, NW¼SW¼ and S½SW¼;
Sec. 4, lot 4, SW¼NW¼ and S½SE¼;
Sec. 5, lot 1 and SE¼NE¼;
Sec. 10, NW¼ and SW¼SE¼;
Sec. 11, NE¼NE¼;
Sec. 12, SW¼NE¼, NW¼NW¼, S½NW¼, N½SW¼, SW¼SW¼, and SE¼SE¼;
Sec. 13;
Sec. 14, NE¼NE¼, S½NE¼, and E½SE¼;
Sec. 15, lots 3 and 12;
Sec. 24, NE¼NE¼.

Aqueduct

New Mexico Principal Meridian, Colorado

T. 36 N., R. 13 W.,
Sec. 19, lot 4, SE¼SW¼, and SE¼;
Sec. 20, W½NW¼ and SW¼;
Sec. 29, NW¼NE¼ and N½NW¼;
Sec. 30, N½NE¼, N½SW¼NE¼, SW¼SW¼NE¼, N½SE¼SW¼NE¼, SE¼NE¼, W½NW¼SE¼, and S½SE¼NW¼SE¼.

Chutes and Ladders

New Mexico Principal Meridian, Colorado

T. 36 N., R. 14 W.,
Sec. 19, E½SW¼ and SE¼;
Sec. 20, SE¼NW¼, and SW¼;
Sec. 29, SW¼NE¼, N½NW¼, SE¼NW¼, that portion lying northerly and easterly of the southerly right-of-way boundary of U.S. Highway 160, NE¼SW¼, that portion lying northerly and easterly of the southerly right-of-way boundary of U.S. Highway 160, and W½SE¼, that portion lying northerly and easterly of the southerly right-of-way boundary of U.S. Highway 160;
Sec. 30, lots 1 and 2, excluding the right-of-way grant described in Reception No. 244629, filed October 20, 1965, in the official records of Montezuma County, Colorado, N½NE¼, and SE¼NW¼.
T.36 N., R. 15 W.,
Sec. 25, NE¼NE¼.

Summit

New Mexico Principal Meridian, Colorado

T.36 N., R. 14 W.,
Sec. 2, SW¼NW¼;
Sec. 3, E½SE¼;
Sec. 8, S½NE¼ and SE¼;
Sec. 9, W½NE¼, SE¼NE¼, S½NW¼, SW¼, and SE¼;
Sec. 10, NE¼NE¼, S½NE¼, S½NW¼, SW¼, and SE¼;
Sec. 11, W½NW¼ and SE¼NW¼;
Sec. 14, SW¼SW¼;
Sec. 15, SW¼NE¼, NW¼, SW¼, W½SE¼, and SE¼SE¼;
Sec. 17, N½NE¼, SE¼NE¼, NE¼SE¼, and S½SE¼;
Sec. 20, E½NE¼;
Sec. 21, SW¼NW¼;
Sec. 22, W½NE¼, N½NW¼, SW¼NW¼, N½SE¼, and SE¼SE¼;
Sec. 23, W½SW¼;
Sec. 26, S½SW¼ and SW¼SE¼;
Sec. 27, NE¼NE¼, W½SE¼, and SE¼SE¼.

The BLM will enforce the following temporary seasonal closures under authority of section 303(a) of the Federal Land Policy and Management Act of 1976 (43 U.S.C. 1733(a)), 43 CFR 8360.0–7, and 43 CFR 8364.1:

1. You must not enter identified closure areas in the Animas City Mountain and Grandview Ridge RMZs of the Durango SRMA from December 1 through April 15 for the protection of critical winter wildlife habitat. This closure may be extended through April 30 if conditions and wildlife needs warrant.

2. You must not enter identified closure areas in the Perins Peak Wildlife Management Area from December 1 through April 15 for the protection of critical winter wildlife habitat. This closure may be extended through April 30 if conditions and wildlife needs warrant.

3. You must not enter identified closure areas in the Perins Peak Wildlife Management Area for peregrine habitat from March 15 through July 31 for the protection of critical raptor habitat.

4. You must not enter the Chutes-n-Ladders, Summit, and Aqueduct areas of the Montezuma Triangle RMZ within the Cortez SRMA from December 1 through April 30 for the protection of critical winter wildlife habitat. Travel on county roads through these areas is allowed.

Exceptions to Closure: The following persons are exempt from this order: Federal, State, and local officers and employees in the performance of their official duties; members of organized rescue or fire-fighting forces in the performance of their official duties; and persons with written authorization from the BLM.

Enforcement: Any person who violates this temporary closure may be tried before a United States Magistrate and fined, imprisoned, or both, in accordance with 43 U.S.C. 1733(a), 18 U.S.C. 3571, and 43 CFR 8360.0–7. In accordance with 43 CFR 8365.1–7, State or local officials may also impose penalties for violations of State or local law.

Effect of Closure: All areas as described in this notice are temporarily closed to all public use, including pedestrian use and vehicles, during the time periods as denoted in this notice, unless specifically excepted as described earlier.

(Authority: 43 U.S.C. 1733(a), 43 CFR 8364.1, 43 CFR 8360.0–7)

Brian D. Achziger,

BLM Colorado Acting State Director.

[FR Doc. 2022–14051 Filed 6–29–22; 8:45 am]

BILLING CODE 4310–JB–P

DEPARTMENT OF THE INTERIOR

National Park Service

[NPS–WASO–NRNHL–DTS#–34132; PPWOCRADI0, PCU00RP14.R50000]

National Register of Historic Places; Notification of Pending Nominations and Related Actions

AGENCY: National Park Service, Interior.

ACTION: Notice.

SUMMARY: The National Park Service is soliciting electronic comments on the significance of properties nominated before June 18, 2022, for listing or related actions in the National Register of Historic Places.

DATES: Comments should be submitted electronically by July 15, 2022.

ADDRESSES: Comments are encouraged to be submitted electronically to *National_Register_Submissions@nps.gov* with the subject line ''Public Comment on <property or proposed district name, (County) State>.'' If you have no access to email you may send them via U.S. Postal Service and all other carriers to the National Register of Historic Places, National Park Service, 1849 C Street NW, MS 7228, Washington, DC 20240.

FOR FURTHER INFORMATION CONTACT: Sherry A. Frear, Chief, National Register of Historic Places/National Historic Landmarks Program, 1849 C Street NW, MS 7228, Washington, DC 20240, *sherry_frear@nps.gov,* 202–913–3763.

SUPPLEMENTARY INFORMATION: The properties listed in this notice are being considered for listing or related actions

in the National Register of Historic Places. Nominations for their consideration were received by the National Park Service before June 18, 2022. Pursuant to Section 60.13 of 36 CFR part 60, comments are being accepted concerning the significance of the nominated properties under the National Register criteria for evaluation.

Before including your address, phone number, email address, or other personal identifying information in your comment, you should be aware that your entire comment—including your personal identifying information—may be made publicly available at any time. While you can ask us in your comment to withhold your personal identifying information from public review, we cannot guarantee that we will be able to do so.

Nominations submitted by State or Tribal Historic Preservation Officers:

CONNECTICUT

Hartford County

Landers, Frary and Clark Ellis Street Plant Historic District, 321 and 322 Ellis St., New Britain, SG100007948

GEORGIA

Troup County

Dixie Cotton Mills and Mill Village Historic District, Roughly centered on 710 Greenville St., LaGrange, SG100007942

IOWA

Mitchell County

Our Savior's Lutheran Church, 833 Ash St., Osage, SG100007944

Pottawattamie County

Council Bluffs Telephone Exchange, 12 Scott St., Council Bluffs, SG100007943

LOUISIANA

Jefferson Parish

McDonoghville Historic District, Roughly bounded by the Crescent City Connection, Jefferson Parish Line, Hancock St., 4th St. extension, Ocean Ave., and the Mississippi R. Trail, Gretna, SG100007945

MARYLAND

Dorchester County

Medicine Hill, 1130 Hooper's Island Rd., Church Creek vicinity, SG100007947

OHIO

Montgomery County

Dayton View Triangle Historic District, Bounded by Salem Ave., Cornell, and Philadelphia Drs., Dayton, SG100007950

RHODE ISLAND

Washington County

Cedar Point Historic District, 13, 21, 26, 31, and 49 Loop Dr., North Kingstown, SG100007946

WYOMING

Teton County

Bridge over Snake River-Structure DEY, Cty. Rd. 11, 7.5 mi. south of Jackson, Jackson vicinity, SG100007949

(Authority: 36 CFR 60.13)

Dated: June 22, 2022.

Paul Lusignan,

Acting Chief, National Register of Historic Places/National Historic Landmarks Program.

[FR Doc. 2022–14055 Filed 6–29–22; 8:45 am]

BILLING CODE 4312–52–P

DEPARTMENT OF THE INTERIOR

Bureau of Reclamation

[RR85854000, 223R5065C6, RX.59689831.0000000; OMB Control Number 1006–NEW]

Agency Information Collection Activities; Submission to the Office of Management and Budget for Review and Approval; Technical Service Center Summer Intern Program Application

AGENCY: Bureau of Reclamation, Interior.

ACTION: Notice of information collection; request for comment.

SUMMARY: In accordance with the Paperwork Reduction Act of 1995, we, the Bureau of Reclamation, are proposing a new information collection that is currently in use without OMB approval. The publication of this 30-day notice is required to bring this information collection into compliance.

DATES: Interested persons are invited to submit comments on or before August 1, 2022.

ADDRESSES: Written comments and recommendations for the proposed information collection should be sent within 30 days of publication of this notice to *https://www.reginfo.gov/public/do/PRAMain.* Find this particular information collection by selecting ''Currently Under 30-day Review—Open for Public Comments'' or by using the search function. Please provide a copy of your comments to Jessica Torrey, Supervisory Civil Engineer, Denver Federal Center, P.O. Box 25007, MS 86–68540, Denver, CO 80225; or by email to *jtorrey@usbr.gov.* Please reference OMB Control Number 1006–NEW in the subject line of your comments.

FOR FURTHER INFORMATION CONTACT: To request additional information about this information collection request (ICR), contact Jessica Torrey by email at *jtorrey@usbr.gov,* or by telephone at (303) 445–2376. Individuals who are deaf, deafblind, hard of hearing, or have a speech disability may dial 711 (TTY, TDD, or TeleBraille) to access telecommunications relay services. You may also view the ICR at *https://www.reginfo.gov/public/do/PRAMain.*

SUPPLEMENTARY INFORMATION: In accordance with the Paperwork Reduction Act of 1995 (PRA, 44 U.S.C. 3501 *et seq.*) and 5 CFR 1320.8(d)(1), we provide the general public and other Federal agencies with an opportunity to comment on new, proposed, revised, and continuing collections of information. This helps us assess the impact of our information collection requirements and minimize the public's reporting burden. It also helps the public understand our information collection requirements and provide the requested data in the desired format.

A **Federal Register** notice with a 60-day public comment period soliciting comments on this collection of information was published on February 3, 2022 (87 FR 6200). No comments were received.

As part of our continuing effort to reduce paperwork and respondent burdens, we are again soliciting comments from the public and other Federal agencies on the proposed ICR that is described below. We are especially interested in public comment addressing the following:

(1) Whether or not the collection of information is necessary for the proper performance of the functions of the agency, including whether or not the information will have practical utility;

(2) The accuracy of our estimate of the burden for this collection of information, including the validity of the methodology and assumptions used;

(3) Ways to enhance the quality, utility, and clarity of the information to be collected; and

(4) How might the agency minimize the burden of the collection of information on those who are to respond, including through the use of appropriate automated, electronic, mechanical, or other technological collection techniques or other forms of information technology, *e.g.,* permitting electronic submission of response.

Comments that you submit in response to this notice are a matter of public record. Before including your address, phone number, address, or other personal identifying information in your comment, you should be aware that your entire comment—including your personal identifying information—may be made publicly available at any time. While you can ask us in your comment to withhold your personal identifying information from public

review, we cannot guarantee that we will be able to do so.

Abstract: The principal purpose for collecting the requested information is to recruit eligible students to participate in Reclamation's Technical Service Center Summer Intern Program. General contact information will be collected along with information on academic standing and areas/fields of interest. Respondents are also asked to submit an interest letter and resume.

Title of Collection: Technical Service Center Summer Intern Program Application.

OMB Control Number: 1006–NEW.

Form Number: 7–3000.

Type of Review: New, in use without OMB approval.

Respondents/Affected Public: Students interested in internships at Reclamation.

Total Estimated Number of Annual Respondents: 150.

Total Estimated Number of Annual Responses: 150.

Estimated Completion Time per Response: 140 minutes.

Total Estimated Number of Annual Burden Hours: 350 hours.

Respondent's Obligation: Required to obtain or retain a benefit.

Frequency of Collection: Annually.

Total Estimated Annual Non-hour Burden Cost: $0.

An agency may not conduct or sponsor and a person is not required to respond to a collection of information unless it displays a currently valid OMB control number.

The authority for this action is the Paperwork Reduction Act of 1995 (44 U.S.C. 3501 *et seq*).

Richard LaFond,

Director, Technical Service Center.

[FR Doc. 2022–14047 Filed 6–29–22; 8:45 am]

BILLING CODE 4332–90–P

DEPARTMENT OF JUSTICE

Drug Enforcement Administration

[Docket No. DEA–1032]

Importer of Controlled Substances Application: Cambrex Charles City

AGENCY: Drug Enforcement Administration, Justice.

ACTION: Notice of application.

SUMMARY: Cambrex Charles City has applied to be registered as an importer of basic class(es) of controlled substance(s). Refer to **SUPPLEMENTARY INFORMATION** listed below for further drug information.

DATES: Registered bulk manufacturers of the affected basic class(es), and applicants therefore, may submit electronic comments on or objections to the issuance of the proposed registration on or before August 1, 2022. Such persons may also file a written request for a hearing on the application on or before August 1, 2022.

ADDRESSES: The Drug Enforcement Administration requires that all comments be submitted electronically through the Federal eRulemaking Portal, which provides the ability to type short comments directly into the comment field on the web page or attach a file for lengthier comments. Please go to *https://www.regulations.gov* and follow the online instructions at that site for submitting comments. Upon submission of your comment, you will receive a Comment Tracking Number. Please be aware that submitted comments are not instantaneously available for public view on *https://www.regulations.gov.* If you have received a Comment Tracking Number, your comment has been successfully submitted and there is no need to resubmit the same comment. All requests for a hearing must be sent to: (1) Drug Enforcement Administration, Attn: Hearing Clerk/OALJ, 8701 Morrissette Drive, Springfield, Virginia 22152; and (2) Drug Enforcement Administration, Attn: DEA Federal Register Representative/DPW, 8701 Morrissette Drive, Springfield, Virginia 22152. All requests for a hearing should also be sent to: Drug Enforcement Administration, Attn: Administrator, 8701 Morrissette Drive, Springfield, Virginia 22152.

SUPPLEMENTARY INFORMATION: In accordance with 21 CFR 1301.34(a), this is notice that on May 9, 2022, Cambrex Charles City, 1205 11th Street, Charles City, Iowa 50616–3466, applied to be registered as an importer of the following basic class(es) of controlled substance(s):

Controlled substance	Drug code	Schedule
Psilocybin	7437	I
ANPP (4-Anilino-N-phenethyl-4-piperidine).	8333	II
Phenylacetone	8501	II
Coca Leaves	9040	II
Opium, raw	9600	II
Poppy Straw Concentrate.	9670	II

The company plans to import the listed controlled substances for internal use and to bulk manufacture other controlled substances into active pharmaceutical ingredient (API) form for distribution to its customers. No other activity for these drug codes is authorized for this registration.

Approval of permit applications will occur only when the registrant's business activity is consistent with what is authorized under 21 U.S.C. 952(a)(2). Authorization will not extend to the import of Food and Drug Administration-approved or non-approved finished dosage forms for commercial sale.

Kristi O'Malley,

Assistant Administrator.

[FR Doc. 2022–14041 Filed 6–29–22; 8:45 am]

BILLING CODE 4410–09–P

DEPARTMENT OF JUSTICE

Drug Enforcement Administration

[Docket No. DEA–1027]

Importer of Controlled Substances Application: Adiramedica, LLC

AGENCY: Drug Enforcement Administration, Justice.

ACTION: Notice of application.

SUMMARY: Adiramedica, LLC. has applied to be registered as an importer of basic class(es) of controlled substance(s). Refer to Supplemental Information listed below for further drug information.

DATES: Registered bulk manufacturers of the affected basic class(es), and applicants therefore, may submit electronic comments on or objections to the issuance of the proposed registration on or before August 1, 2022. Such persons may also file a written request for a hearing on the application on or before August 1, 2022.

ADDRESSES: The Drug Enforcement Administration requires that all comments be submitted electronically through the Federal eRulemaking Portal, which provides the ability to type short comments directly into the comment field on the web page or attach a file for lengthier comments. Please go to *https://www.regulations.gov* and follow the online instructions at that site for submitting comments. Upon submission of your comment, you will receive a Comment Tracking Number. Please be aware that submitted comments are not instantaneously available for public view on *https://www.regulations.gov.* If you have received a Comment Tracking Number, your comment has been successfully submitted and there is no need to resubmit the same comment. All requests for a hearing must be sent to: (1) Drug Enforcement Administration, Attn: Hearing Clerk/OALJ, 8701 Morrissette Drive, Springfield, Virginia 22152; and (2) Drug Enforcement Administration, Attn: DEA Federal

Register Representative/DPW, 8701 Morrissette Drive, Springfield, Virginia 22152. All requests for a hearing should also be sent to: Drug Enforcement Administration, Attn: Administrator, 8701 Morrissette Drive, Springfield, Virginia 22152.

SUPPLEMENTARY INFORMATION: In accordance with 21 CFR 1301.34(a), this is notice that on May 10, 2022, Adiramedica, LLC., 585 Turner Industrial Way, Aston Pennsylvania 19014, applied to be registered as an importer of the following basic class(es) of controlled substance(s):

Controlled substance	Drug code	Schedule
Tapentadol	9780	II

The company plans to import Tapentadol in finished dosage form for clinical trials. No other activity for this drug code is authorized for this registration drug code is authorized for this registration.

Approval of permit applications will occur only when the registrant's business activity is consistent with what is authorized under 21 U.S.C. 952(a)(2). Authorization will not extend to the import of Food and Drug Administration-approved or non-approved finished dosage forms for commercial sale.

Kristi O'Malley,

Assistant Administrator.

[FR Doc. 2022–14036 Filed 6–29–22; 8:45 am]

BILLING CODE P

DEPARTMENT OF JUSTICE

Drug Enforcement Administration

[Docket No. DEA–1031]

Bulk Manufacturer of Controlled Substances Application: American Radiolabeled Chem

AGENCY: Drug Enforcement Administration, Justice.

ACTION: Notice of application.

SUMMARY: American Radiolabeled Chem has applied to be registered as a bulk manufacturer of basic class(es) of controlled substance(s). Refer to Supplementary Information listed below for further drug information.

DATES: Registered bulk manufacturers of the affected basic class(es), and applicants therefore, may submit electronic comments on or objections to the issuance of the proposed registration on or before August 29, 2022. Such persons may also file a written request for a hearing on the application on or before August 29, 2022.

ADDRESSES: The Drug Enforcement Administration requires that all comments be submitted electronically through the Federal eRulemaking Portal, which provides the ability to type short comments directly into the comment field on the web page or attach a file for lengthier comments. Please go to *https://www.regulations.gov* and follow the online instructions at that site for submitting comments. Upon submission of your comment, you will receive a Comment Tracking Number. Please be aware that submitted comments are not instantaneously available for public view on *https://www.regulations.gov.* If you have received a Comment Tracking Number, your comment has been successfully submitted and there is no need to resubmit the same comment.

SUPPLEMENTARY INFORMATION: In accordance with 21 CFR 1301.33(a), this is notice that on May 24, 2022, American Radiolabeled Chem, 101 Arc Drive, Saint Louis, Missouri 63146–3502, applied to be registered as a bulk manufacturer of the following basic class(es) of controlled substance(s):

Controlled substance	Drug code	Schedule
Gamma Hydroxybutyric Acid	2010	I
Ibogaine	7260	I
Lysergic acid diethylamide	7315	I
Tetrahydrocannabinols	7370	I
Dimethyltryptamine	7435	I
1-[1-(2-Thienyl)cyclohexyl]piperidine.	7470	I
Noroxymorphone	9145	I
Heroin	9200	I
Normorphine	9313	I
Amphetamine	1100	II
Methamphetamine	1105	II
Amobarbital	2125	II
Phencyclidine	7471	II
Phenylacetone	8501	II
Cocaine	9041	II
Codeine	9050	II
Dihydrocodeine	9120	II
Oxycodone	9143	II
Hydromorphone	9150	II
Ecgonine	9180	II
Hydrocodone	9193	II
Meperidine	9230	II
Metazocine	9240	II
Methadone	9250	II
Dextropropoxyphene, bulk (non-dosage forms).	9273	II
Morphine	9300	II
Oripavine	9330	II
Thebaine	9333	II
Oxymorphone	9652	II
Phenazocine	9715	II
Carfentanil	9743	II
Fentanyl	9801	II

The company plans to bulk manufacture the listed controlled substances for the internal use intermediates or for sale to its customers. The company plans to manufacture small quantities of the above-listed controlled substances as radiolabeled compounds for biochemical research. No other activities for these drug codes are authorized for this registration.

Kristi O'Malley,

Assistant Administrator.

[FR Doc. 2022–14040 Filed 6–29–22; 8:45 am]

BILLING CODE 4410–09–P

DEPARTMENT OF JUSTICE

Drug Enforcement Administration

[Docket No. DEA–1030]

Importer of Controlled Substances Application: Aurobindo Pharma USA, Inc.

AGENCY: Drug Enforcement Administration, Justice.

ACTION: Notice of application.

SUMMARY: Aurobindo Pharma USA, Inc. has applied to be registered as an importer of basic class(es) of controlled substance(s). Refer to Supplementary Information listed below for further drug information.

DATES: Registered bulk manufacturers of the affected basic class(es), and applicants therefore, may submit electronic comments on or objections to the issuance of the proposed registration on or before August 1, 2022. Such persons may also file a written request for a hearing on the application on or before August 1, 2022.

ADDRESSES: The Drug Enforcement Administration requires that all comments be submitted electronically through the Federal eRulemaking Portal, which provides the ability to type short comments directly into the comment field on the web page or attach a file for lengthier comments. Please go to *https://www.regulations.gov* and follow the online instructions at that site for submitting comments. Upon submission of your comment, you will receive a Comment Tracking Number. Please be aware that submitted comments are not instantaneously available for public view on *https://www.regulations.gov.* If you have received a Comment Tracking Number, your comment has been successfully submitted and there is no need to resubmit the same comment. All requests for a hearing must be sent to: (1) Drug Enforcement Administration, Attn: Hearing Clerk/OALJ, 8701 Morrissette Drive, Springfield, Virginia 22152; and (2) Drug Enforcement Administration, Attn: DEA Federal Register Representative/DPW, 8701 Morrissette Drive, Springfield, Virginia 22152. All requests for a hearing should

also be sent to: Drug Enforcement Administration, Attn: Administrator, 8701 Morrissette Drive, Springfield, Virginia 22152.

SUPPLEMENTARY INFORMATION: In accordance with 21 CFR 1301.34(a), this is notice that on May 11, 2022, Aurobindo Pharma USA, Inc., 6 Wheeling Road, Dayton, New Jersey 08810–1526, applied to be registered as an importer of the following basic class(es) of controlled substance(s):

Controlled substance	Drug code	Schedule
Remifentanil	9739	II

The company plans to import Remifentanil (9739) in bulk form for research and development. No other activity for this drug code is authorized for this registration. No other activity for this drug code is authorized for this registration.

Approval of permit applications will occur only when the registrant's business activity is consistent with what is authorized under 21 U.S.C. 952(a)(2). Authorization will not extend to the import of Food and Drug Administration-approved or non-approved finished dosage forms for commercial sale.

Kristi O'Malley,

Assistant Administrator.

[FR Doc. 2022–14035 Filed 6–29–22; 8:45 am]

BILLING CODE P

DEPARTMENT OF JUSTICE

Notice Lodging of Proposed Consent Decree Amendment Under the Clean Water Act

On June 23, 2022, the Department of Justice lodged a proposed Second Amendment to Consent Decree (''Second Amendment'') with the United States District Court for the Northern District of Ohio in the lawsuit entitled *United States and State of Ohio* v. *City of Toledo, Ohio,* Civil Action No. 3:91–7646. This is a corrected notice of lodging, which included Appendix A to the proposed Second Amendment, which was not included in the original lodging, which was filed on April 19, 2022.

The Court entered a consent decree in this case on December 16, 2002, which resolved violations the United States and State of Ohio alleged under the Clean Water Act and Toledo's wastewater treatment discharge permit for the City of Toledo's (the ''City'') discharges from the City's treatment plant and sewer system. The consent decree, as subsequently amended in 2011, required Toledo, pertinent to the Second Amendment to: (1) expand treatment plant capacity to handle the greater amounts of sewage combined with storm water or snowmelt arriving at the treatment plant during such wet weather periods; (2) implement a Long Term Control Plan to reduce the discharges of combined stormwater and sanitary sewage from the portions of Toledo's sewer system known as the City's combined sewer system, which among other things, requires Toledo to construct extensions to tunnels that store such combined sewage during periods of rain or snowmelt for transport to the City's wastewater treatment plant following such periods; and (3) study the effectiveness of pathogen removal in the wet weather system Toledo constructed at its wastewater treatment plant pursuant to the consent decree.

The proposed Second Amendment requires the City to construct separate storm sewers instead of the Swan Creek North Tunnel Extension. The storm sewer construction is intended to reduce congestion in Toledo's combined sewer system more than the tunnel extension would, resulting in fewer combined sewage discharges and less total volume of sewer overflows into Swan Creek. Second, the Second Amendment authorizes changes in one of the discharge locations from the combined sewer system located near Jamie Farr Park after three combined sewer outfalls are combined into one. Both locations are at the Maumee River; they are about 0.4 miles apart. The original planned consolidated outfall was located southeast of the intersection of Summit Street and Galena Street, while the location of the consolidated outfall under this amendment is located southeast of the intersection of Summit Street and Columbus Street. The original planned consolidated outfall was located southeast of the intersection of Summit Street and Galena Street, while the new one is located southeast of the intersection of Summit Street and Columbus Street. Third, the amendment allows the City to conclude the pathogen removal study early, after the parties realized that undertaking any additional study would not provide additional information pertinent to pathogen removal issues.

The publication of this notice opens a period for public comment on the Second Amendment. Comments should be addressed to the Assistant Attorney General, Environment and Natural Resources Division, and should refer to *United States and State of Ohio* v. *City of Toledo,* D.J. Ref. No. 90–5–1–1–3554. All comments must be submitted no later than thirty (30) days after the publication date of this notice. Comments may be submitted either by email or by mail:

To submit comments:	*Send them to:*
By email	*pubcomment-ees.enrd@usdoj.gov.*
By mail	Assistant Attorney General, U.S. DOJ—ENRD, P.O. Box 7611, Washington, DC 20044–7611.

During the public comment period, the Second Amendment may be examined and downloaded at this Justice Department website: *http://www.justice.gov/enrd/consent-decrees.* We will provide a paper copy of the Second Amendment upon written request and payment of reproduction costs. Please mail your request and payment to: Consent Decree Library, U.S. DOJ—ENRD, P.O. Box 7611, Washington, DC 20044–7611.

Please enclose a check or money order for $7.25 (25 cents per page reproduction cost) payable to the United States Treasury.

Patricia McKenna,

Assistant Section Chief, Environmental Enforcement Section, Environment and Natural Resources Division.

[FR Doc. 2022–13950 Filed 6–29–22; 8:45 am]

BILLING CODE 4410–15–P

DEPARTMENT OF JUSTICE

[OMB Number 1117–0029]

Agency Information Collection Activities; Proposed eCollection, eComments Requested; Extension Without Change of a Previously Approved Collection; Annual Reporting Requirement for Manufacturers of Listed Chemicals

AGENCY: Drug Enforcement Administration, Department of Justice.

ACTION: 30-Day notice.

SUMMARY: The Department of Justice, Drug Enforcement Administration (DEA), is submitting the following information collection request to the Office of Management and Budget for review and approval in accordance with the Paperwork Reduction Act of 1995. The proposed information collection was previously published in the **Federal Register** on May 6, 2022, allowing for a 60-day comment period. No comments were received.

DATES: Comments are encouraged and will be accepted for 30 days until August 1, 2022.

FOR FURTHER INFORMATION CONTACT: Written comments and recommendations for the proposed information collection should be sent within 30 days of publication of this notice to *www.reginfo.gov/public/do/PRAMain.* Find this particular information collection by selecting ''Currently under 30-day Review—Open for Public Comments'' or by using the search function.

SUPPLEMENTARY INFORMATION: Written comments and suggestions from the public and affected agencies concerning the proposed collection of information are encouraged. Your comments should address one or more of the following four points:

—Evaluate whether the proposed collection of information is necessary for the proper performance of the functions of the agency, including whether the information will have practical utility;

—Evaluate the accuracy of the agency's estimate of the burden of the proposed collection of information, including the validity of the methodology and assumptions used;

—Evaluate whether and if so how the quality, utility, and clarity of the information proposed to be collected can be enhanced; and

—Minimize the burden of the collection of information on those who are to respond, including through the use of appropriate automated, electronic, mechanical, or other technological collection techniques or other forms of information technology, *e.g.,* permitting electronic submission of responses.

Overview of This Information Collection

1. *Type of Information Collection:* Extension of a currently approved collection.

2. *Title of the Form/Collection:* Annual Reporting Requirement for Manufacturers of Listed Chemicals.

3. *The agency form number, if any, and the applicable component of the Department sponsoring the collection:* Form number: N/A. The applicable component within the Department of Justice is the Drug Enforcement Administration, Diversion Control Division.

4. *Affected public who will be asked or required to respond, as well as a brief abstract:*

Affected public (Primary): Business or other for-profit.

Affected public (Other): None.

Abstract: Pursuant to 21 U.S.C. 830(b)(2) and 21 CFR 1310.05(d), manufacturers of listed chemicals must file annual reports of manufacturing, inventory, and use data for the listed chemicals they manufacture. These reports allow DEA to monitor the volume and availability of domestically manufactured listed chemicals, which may be subject to diversion for the illicit production of controlled substances.

5. *An estimate of the total number of respondents and the amount of time estimated for an average respondent to respond:* Each respondent for this information collection completes one response per year. DEA estimates there are 50 respondents, and that each response takes 0.25 hours to complete.

6. *An estimate of the total public burden (in hours) associated with the proposed collection:* DEA estimates this collection takes a total of 12.5 annual burden hours.

If additional information is required, please contact: Robert Houser, Assistant Director, Policy and Planning Staff, United States Department of Justice, Justice Management Division, Two Constitution Square, 145 N Street NE, Suite 3E.405B, Washington, DC 20530.

Dated: June 24, 2022.

Robert Houser,

Assistant Director, Policy and Planning Staff, Office of the Chief Information Officer, U.S. Department of Justice.

[FR Doc. 2022–13971 Filed 6–29–22; 8:45 am]

BILLING CODE 4410–09–P

DEPARTMENT OF LABOR

Agency Information Collection Activities; Submission for OMB Review; Comment Request; Prohibited Transaction Class Exemption for Insurance and Annuity Contracts and Mutual Fund Principal Underwriters

ACTION: Notice of availability; request for comments.

SUMMARY: The Department of Labor (DOL) is submitting this Employee Benefits Security Administration (EBSA)-sponsored information collection request (ICR) to the Office of Management and Budget (OMB) for review and approval in accordance with the Paperwork Reduction Act of 1995 (PRA). Public comments on the ICR are invited.

DATES: The OMB will consider all written comments that the agency receives on or before August 1, 2022.

ADDRESSES: Written comments and recommendations for the proposed information collection should be sent within 30 days of publication of this notice to *www.reginfo.gov/public/do/PRAMain.* Find this particular information collection by selecting ''Currently under 30-day Review—Open for Public Comments'' or by using the search function.

Comments are invited on: (1) whether the collection of information is necessary for the proper performance of the functions of the Department, including whether the information will have practical utility; (2) if the information will be processed and used in a timely manner; (3) the accuracy of the agency's estimates of the burden and cost of the collection of information, including the validity of the methodology and assumptions used; (4) ways to enhance the quality, utility and clarity of the information collection; and (5) ways to minimize the burden of the collection of information on those who are to respond, including the use of automated collection techniques or other forms of information technology.

FOR FURTHER INFORMATION CONTACT: Mara Blumenthal by telephone at 202–693–8538, or by email at *DOL_PRA_PUBLIC@dol.gov.*

SUPPLEMENTARY INFORMATION: Prohibited Transaction Class Exemption (PTE) 84–24, as amended, provides an exemption for insurance agents, insurance brokers and pension consultants to receive a sales commission from an insurance company in connection with the purchase, with plan or IRA assets, of an insurance or annuity contract. Relief is also provided for a principal underwriter for an investment company registered under the Investment Company Act of 1940 to receive a sales commission in connection with the purchase, with plan or IRA assets, of securities issued by the investment company. To ensure that the class exemption is not abused, that the rights of the participants and beneficiaries are protected, and that the exemption's conditions are being complied with, the Department often requires minimal information collection pertaining to the affected transactions. For additional substantive information about this ICR, see the related notice published in the **Federal Register** on March 17, 2022 (87 FR 15267).

This information collection is subject to the PRA. A Federal agency generally cannot conduct or sponsor a collection of information, and the public is generally not required to respond to an information collection, unless the OMB approves it and displays a currently

valid OMB Control Number. In addition, notwithstanding any other provisions of law, no person shall generally be subject to penalty for failing to comply with a collection of information that does not display a valid OMB Control Number. *See* 5 CFR 1320.5(a) and 1320.6.

DOL seeks PRA authorization for this information collection for three (3) years. OMB authorization for an ICR cannot be for more than three (3) years without renewal. The DOL notes that information collection requirements submitted to the OMB for existing ICRs receive a month-to-month extension while they undergo review.

Agency: DOL–EBSA.

Title of Collection: Prohibited Transaction Class Exemption for Insurance and Annuity Contracts and Mutual Fund Principal Underwriters.

OMB Control Number: 1210–0158.

Affected Public: Private Sector—Businesses or other for-profits and not-for-profit institutions.

Total Estimated Number of Respondents: 7,988.

Total Estimated Number of Responses: 258,041.

Total Estimated Annual Time Burden: 45,277 hours.

Total Estimated Annual Other Costs Burden: $11,743.

(Authority: 44 U.S.C. 3507(a)(1)(D))

Dated: June 23, 2022.

Mara Blumenthal,

Senior PRA Analyst.

[FR Doc. 2022–14004 Filed 6–29–22; 8:45 am]

BILLING CODE 4510–29–P

DEPARTMENT OF LABOR

Agency Information Collection Activities; Submission for OMB Review; Comment Request; Notice of Special Enrollment Rights Under Group Health Plans

ACTION: Notice of availability; request for comments.

SUMMARY: The Department of Labor (DOL) is submitting this Employee Benefits Security Administration (EBSA)-sponsored information collection request (ICR) to the Office of Management and Budget (OMB) for review and approval in accordance with the Paperwork Reduction Act of 1995 (PRA). Public comments on the ICR are invited.

DATES: The OMB will consider all written comments that the agency receives on or before August 1, 2022.

ADDRESSES: Written comments and recommendations for the proposed information collection should be sent within 30 days of publication of this notice to *www.reginfo.gov/public/do/PRAMain.* Find this particular information collection by selecting ''Currently under 30-day Review—Open for Public Comments'' or by using the search function.

Comments are invited on: (1) whether the collection of information is necessary for the proper performance of the functions of the Department, including whether the information will have practical utility; (2) if the information will be processed and used in a timely manner; (3) the accuracy of the agency's estimates of the burden and cost of the collection of information, including the validity of the methodology and assumptions used; (4) ways to enhance the quality, utility and clarity of the information collection; and (5) ways to minimize the burden of the collection of information on those who are to respond, including the use of automated collection techniques or other forms of information technology.

FOR FURTHER INFORMATION CONTACT: Mara Blumenthal by telephone at 202–693–8538, or by email at *DOL_PRA_PUBLIC@dol.gov.*

SUPPLEMENTARY INFORMATION: The Health Insurance Probability and Accountability Act (HIPAA) provisions limit the extent to which group health plans and their health insurance issuers can restrict health coverage based on pre-existing conditions for individuals who previously had health coverage. Section 701(f) of ERISA also provides special enrollment rights to individuals who have previously declined health coverage offered to them to enroll in health coverage upon the occurrence of specified events. Plans and issuers are required to provide for 30-day special enrollment periods following any of these events during which individuals who are eligible but not enrolled have a right to enroll without being denied enrollment or having to wait for a late enrollment opportunity (often called ''open enrollment''). For additional substantive information about this ICR, see the related notice published in the **Federal Register** on March 17, 2022 (87 FR 15267).

This information collection is subject to the PRA. A Federal agency generally cannot conduct or sponsor a collection of information, and the public is generally not required to respond to an information collection, unless the OMB approves it and displays a currently valid OMB Control Number. In addition, notwithstanding any other provisions of law, no person shall generally be subject to penalty for failing to comply with a collection of information that does not display a valid OMB Control Number. *See* 5 CFR 1320.5(a) and 1320.6.

DOL seeks PRA authorization for this information collection for three (3) years. OMB authorization for an ICR cannot be for more than three (3) years without renewal. The DOL notes that information collection requirements submitted to the OMB for existing ICRs receive a month-to-month extension while they undergo review.

Agency: DOL–EBSA.

Title of Collection: Notice of Special Enrollment Rights under Group Health Plans.

OMB Control Number: 1210–0101.

Affected Public: Private Sector—Businesses or other for-profits and not-for-profit institutions.

Total Estimated Number of Respondents: 2,007,298.

Total Estimated Number of Responses: 8,618,763.

Total Estimated Annual Time Burden: 552 hours.

Total Estimated Annual Other Costs Burden: $430,938.

(Authority: 44 U.S.C. 3507(a)(1)(D))

Dated: June 23, 2022.

Mara Blumenthal,

Senior PRA Analyst.

[FR Doc. 2022–14003 Filed 6–29–22; 8:45 am]

BILLING CODE 4510–29–P

NATIONAL CREDIT UNION ADMINISTRATION

Submission for OMB Review; Comment Request

AGENCY: National Credit Union Administration (NCUA).

ACTION: Notice.

SUMMARY: The National Credit Union Administration (NCUA) will submit the following information collection requests to the Office of Management and Budget (OMB) for review and clearance in accordance with the Paperwork Reduction Act of 1995, on or after the date of publication of this notice.

DATES: Comments should be received on or before August 1, 2022 to be assured of consideration.

ADDRESSES: Written comments and recommendations for the proposed information collection should be sent within 30 days of publication of this notice to *https://www.reginfo.gov/public/do/PRAMain.* Find this particular information collection by selecting ''Currently under 30-day Review—Open for Public Comments'' or by using the search function.

FOR FURTHER INFORMATION CONTACT: Copies of the submission may be obtained by contacting Dawn Wolfgang at (703) 548–2279, emailing *PRAComments@ncua.gov,* or viewing the entire information collection request at *www.reginfo.gov.*

SUPPLEMENTARY INFORMATION:

OMB Number: 3133–0004.

Type of Review: Extension of a currently approved collection.

Title: NCUA Call Report.

Form: NCUA Form 5300.

Abstract: Sections 106 and 202 of the Federal Credit Union Act require federally insured credit unions to make financial reports to the NCUA. Section 741.5 prescribes the method in which federally insured credit unions must submit this information to the NCUA. NCUA Form 5300, Call Report, is used to file quarterly financial and statistical data through the NCUA's online portal, CUOnline.

The financial and statistical information is essential to the NCUA in carrying out its responsibility for supervising federal credit unions. The information also enables the NCUA to monitor all federally insured credit unions with National Credit Union Share Insurance Fund (NCUSIF) insured share accounts.

Affected Public: Private Sector: Not-for-profit institutions.

Estimated Total Annual Burden Hours: 81,552.

OMB Number: 3133–0202.

Type of Review: Extension of a currently approved collection.

Title: Proof of Concept Application (POC) for New Charter Organizing Groups.

Abstract: The Office of Credit Union Resources and Expansion (CURE) is responsible for the review and approval of charter applications submitted by organizing groups. CURE has implemented a charter modernization process to improve the quality of charter applications received. This will help ensure organizing groups submit a well-thought out, well-developed charter plan to minimize the back-and-forth communication and improve overall chartering processing times. CURE management implemented the Proof of Concept (POC) data collection through the CyberGrants system, which documents the four most critical elements for establishing a new charter. This is ''Phase 1'' of the process.

The purpose of this information collection is to identify the level of understanding an organizing group has before they make a formal charter application submission as prescribed by Appendix B to 12 CFR part 701 (12 U.S.C. 1758, 1759).

Affected Public: Private Sector: Not-for-profit institutions.

Estimated Total Annual Burden Hours: 104.

By Melane Conyers-Ausbrooks, Secretary of the Board, the National Credit Union Administration, on June 27, 2022.

Dated: June 27, 2022.

Dawn D. Wolfgang,

NCUA PRA Clearance Officer.

[FR Doc. 2022–14049 Filed 6–29–22; 8:45 am]

BILLING CODE 7535–01–P

NATIONAL CREDIT UNION ADMINISTRATION

Agency Information Collection Activities: Proposed Collections

AGENCY: National Credit Union Administration (NCUA).

ACTION: Notice and request for comment.

SUMMARY: The National Credit Union Administration (NCUA), as part of a continuing effort to reduce paperwork and respondent burden, invites the general public and other Federal agencies to comment on the following extensions of currently approved collections, as required by the Paperwork Reduction Act of 1995.

DATES: Written comments should be received on or before August 29, 2022 to be assured consideration.

ADDRESSES: Interested persons are invited to submit written comments on the information collection to Dawn Wolfgang, National Credit Union Administration, 1775 Duke Street, Suite 6032, Alexandria, Virginia 22314; email at *PRAComments@NCUA.gov.* Given the limited in-house staff because of the COVID–19 pandemic, email comments are preferred.

FOR FURTHER INFORMATION CONTACT: Address requests for additional information to Dawn Wolfgang at the address above or telephone 703–548–2279.

SUPPLEMENTARY INFORMATION:

OMB Number: 3133–0039.

Title: Borrowed Funds from Natural Person.

Type of Review: Extension of a currently approved collection.

Abstract: Section 701.38 of the NCUA regulations grants federal credit unions the authority to borrow funds from a natural person as long as they maintain a signed promissory note which includes the terms and conditions of maturity, repayment, interest rate, method of computation and method of payment; and the promissory note and any advertisements for borrowing have clearly visible language stating that the note represents money borrowed by the credit union and does not represent shares and is not insured by the National Credit Union Insurance Fund (NCUSIF). NCUA will use this information to ensure a credit union's natural person borrowings are in compliance and address all regulatory and safety and soundness requirements.

Affected Public: Private Sector: Not-for-profit institutions.

Estimated No. of Respondents: 187.

Estimated No. of Responses per Respondent: 1.

Estimated Total Annual Responses: 187.

Estimated Burden Hours per Response: 0.167.

Estimated Total Annual Burden Hours: 31.

OMB Number: 3133–0129.

Title: Corporate Credit Union, 12 CFR 704.

Type of Review: Extension of a currently approved collection.

Abstract: Part 704 of NCUA's regulations established the regulatory framework for corporate credit unions. This includes various reporting and recordkeeping requirements as well as safety and soundness standards. NCUA has established and regulates corporate credit unions pursuant to its authority under §§ 120, 201, and 209 of the Federal Credit Union Act, 12 U.S.C. 1766(a), 1781, and 1789. The collection of information is necessary to ensure that corporate credit unions operate in a safe and sound manner by limiting risk to their natural person credit union members and the National Credit Union Share Insurance Fund.

Affected Public: Private Sector: Not-for-profit institutions.

Estimated No. of Respondents: 11.

Estimated No. of Responses per Respondent: 21.91.

Estimated Total Annual Responses: 241.

Estimated Burden Hours per Response: 0.95.

Estimated Total Annual Burden Hours: 230.

Reason for change: Adjustments were made to correct the ''type'' of burden identified and the addition of a few information collection requirements previously omitted; for a decrease of 266 burden hours.

Request for Comments: Comments submitted in response to this notice will be summarized and included in the request for Office of Management and Budget approval. All comments will become a matter of public record. The public is invited to submit comments concerning: (a) whether the collection of information is necessary for the proper

execution of the function of the agency, including whether the information will have practical utility; (b) the accuracy of the agency's estimate of the burden of the collection of information, including the validity of the methodology and assumptions used; (c) ways to enhance the quality, utility, and clarity of the information to be collected; and (d) ways to minimize the burden of the collection of the information on the respondents, including the use of automated collection techniques or other forms of information technology.

By Melane Conyers-Ausbrooks, Secretary of the Board, the National Credit Union Administration, on June 27, 2022.

Dated: June 27, 2022.

Dawn D. Wolfgang,

NCUA PRA Clearance Officer.

[FR Doc. 2022–14053 Filed 6–29–22; 8:45 am]

BILLING CODE 7535–01–P

NATIONAL FOUNDATION ON THE ARTS AND THE HUMANITIES

Federal Council on the Arts and the Humanities

Arts and Artifacts Indemnity Panel Advisory Committee

AGENCY: Federal Council on the Arts and the Humanities; National Foundation on the Arts and the Humanities.

ACTION: Notice of meeting.

SUMMARY: Pursuant to the Federal Advisory Committee Act, notice is hereby given that the Federal Council on the Arts and the Humanities will hold a meeting of the Arts and Artifacts Domestic Indemnity Panel.

DATES: The meeting will be held on Wednesday, August 17, 2022, from 12:00 p.m. until adjourned.

ADDRESSES: The meeting will be held by videoconference originating at the National Endowment for the Arts, Washington, DC 20506.

FOR FURTHER INFORMATION CONTACT: Elizabeth Voyatzis, Committee Management Officer, 400 7th Street SW, Room 4060, Washington, DC 20506, (202) 606–8322; *evoyatzis@neh.gov.*

SUPPLEMENTARY INFORMATION: The purpose of the meeting is for panel review, discussion, evaluation, and recommendation on applications for Certificates of Indemnity submitted to the Federal Council on the Arts and the Humanities, for exhibitions beginning on or after October 1, 2022. Because the meeting will consider proprietary financial and commercial data provided in confidence by indemnity applicants, and material that is likely to disclose trade secrets or other privileged or confidential information, and because it is important to keep the values of objects to be indemnified and the methods of transportation and security measures confidential, I have determined that that the meeting will be closed to the public pursuant to subsection (c)(4) of section 552b of Title 5, United States Code. I have made this determination under the authority granted me by the Chairman's Delegation of Authority to Close Advisory Committee Meetings, dated April 15, 2016.

Dated: June 24, 2022.

Samuel Roth,

Attorney-Advisor, National Endowment for the Humanities.

[FR Doc. 2022–13979 Filed 6–29–22; 8:45 am]

BILLING CODE 7536–01–P

NATIONAL FOUNDATION ON THE ARTS AND THE HUMANITIES

Extension of a Currently Approved Collection; 60-Day Comment Request; Generic Clearance for the Collection of Qualitative Feedback on Agency Service Delivery

AGENCY: National Endowment for the Humanities.

ACTION: Notice; request for comments.

SUMMARY: In accordance with the Paperwork Reduction Act of 1995, the National Endowment for the Humanities (NEH) is seeking comment concerning the renewal of its generic clearance for the collection of qualitative feedback on agency service delivery. This generic clearance fast-tracks the process for NEH to seek feedback from the public, through surveys and similar feedback instruments, regarding NEH services and programs.

DATES: Please submit comments by August 29, 2022.

ADDRESSES: Submit comments to Elizabeth Voyatzis, Deputy General Counsel, Office of the General Counsel, National Endowment for the Humanities, 400 7th Street SW, Room 4060, Washington, DC 20506; (202) 606–8322; *gencounsel@neh.gov.*

FOR FURTHER INFORMATION CONTACT: Elizabeth Voyatzis, Deputy General Counsel, Office of the General Counsel, National Endowment for the Humanities, 400 7th Street SW, Room 4060, Washington, DC 20506; (202) 606–8322; *gencounsel@neh.gov.*

SUPPLEMENTARY INFORMATION:

Overview of This Information Collection

Type of Review: Extension of a currently approved collection.

Title: Generic Clearance for the Collection of Qualitative Feedback on Agency Service Delivery.

OMB Control Number: 3136–0140.

Abstract: NEH is seeking to renew its generic clearance for the collection of qualitative feedback on agency service delivery. This information collection enables NEH to obtain qualitative customer and stakeholder feedback in an efficient, timely manner, in accordance with the Administration's commitment to improving the Federal Government's customer experience and service delivery. Qualitative feedback includes information that provides useful insights on perceptions and opinions, as opposed to statistical surveys that yield quantitative results that can be generalized to the population of study.

There is no change in the method, substance, or estimated burden of the proposed collection of information.

Affected Public: Individuals and Households, Businesses and Organizations, State, Local or Tribal Governments.

Frequency of Collection: On occasion.

Estimated Annual Number of Respondents: 10,000.

Estimated Average Time per Response: 15 minutes.

Estimated Total Annual Burden Hours: 2,500 hours.

Request for Comments

NEH will make comments submitted in response to this notice, including names and addresses where provided, a matter of public record. NEH will summarize the comments and include them in the request to the Office of Management and Budget to renew its approval of the collection. We are requesting comments on all aspects of this generic clearance request, including: (a) whether the proposed collection of information is necessary for the proper performance of the functions of the agency, including whether the information shall have practical utility; (b) the accuracy of the agency's estimate of the burden of the proposed collection of information; (c) ways to enhance the quality, utility, and clarity of the information to be collected; and (d) ways to minimize the burden of the collection of information on those who are to respond, including through the use of automated collection techniques or other forms of information technology.

Dated: June 27, 2022.

Samuel Roth,

Attorney-Advisor, National Endowment for the Humanities.

[FR Doc. 2022–13997 Filed 6–29–22; 8:45 am]

BILLING CODE 7536–01–P

NATIONAL SCIENCE FOUNDATION

Notice of Permit Applications Received Under the Antarctic Conservation Act of 1978

AGENCY: National Science Foundation.

ACTION: Notice of permit applications received.

SUMMARY: The National Science Foundation (NSF) is required to publish a notice of permit applications received to conduct activities regulated under the Antarctic Conservation Act of 1978. NSF has published regulations under the Antarctic Conservation Act in the Code of Federal Regulations. This is the required notice of permit applications received.

DATES: Interested parties are invited to submit written data, comments, or views with respect to this permit application by August 1, 2022. This application may be inspected by interested parties at the Permit Office, address below.

ADDRESSES: Comments should be addressed to Permit Office, Office of Polar Programs, National Science Foundation, 2415 Eisenhower Avenue, Alexandria, Virginia 22314 or *ACApermits@nsf.gov.*

FOR FURTHER INFORMATION CONTACT: Andrew Titmus, ACA Permit Officer, at the above address, 703–292–4479.

SUPPLEMENTARY INFORMATION: The National Science Foundation, as directed by the Antarctic Conservation Act of 1978 (Pub. L. 95–541, 45 CFR 670) as amended by the Antarctic Science, Tourism and Conservation Act of 1996, has developed regulations for the establishment of a permit system for various activities in Antarctica and designation of certain animals and certain geographic areas as requiring special protection. The regulations establish such a permit system to designate Antarctic Specially Protected Areas.

Application Details

Permit Application: 2023–005

1. *Applicant:*

Todd McKinney, University of Alabama in Huntsville, 241 Aldrin Dr, Huntsville AL 35806

Activity for Which Permit Is Requested

Waste management. The applicant proposes to deploy five micro super pressure weather balloons from Neumayer Station III in East Antarctica with the purpose of researching the behavior of micro super pressure balloons in the Antarctic climate. The balloons will fly for 30–150 days and then land, below 50 degrees south. The balloons will not be recovered. The balloons themselves should degrade within 3 years, while the small circuit boards they are equipped with will degrade between 25 to 50 years. The applicant is seeking a Waste Permit to cover these unrecoverable balloons and circuit boards.

Location

Neumayer Station III, East Antarctica.

Dates of Permitted Activities

November 8th–December 14th, 2022.

Erika N. Davis,

Program Specialist, Office of Polar Programs.

[FR Doc. 2022–13984 Filed 6–29–22; 8:45 am]

BILLING CODE 7555–01–P

POSTAL REGULATORY COMMISSION

[Docket Nos. MC2022–76 and CP2022–82]

New Postal Products

AGENCY: Postal Regulatory Commission.

ACTION: Notice.

SUMMARY: The Commission is noticing a recent Postal Service filing for the Commission's consideration concerning a negotiated service agreement. This notice informs the public of the filing, invites public comment, and takes other administrative steps.

DATES: *Comments are due:* July 5, 2022.

ADDRESSES: Submit comments electronically via the Commission's Filing Online system at *http://www.prc.gov.* Those who cannot submit comments electronically should contact the person identified in the **FOR FURTHER INFORMATION CONTACT** section by telephone for advice on filing alternatives.

FOR FURTHER INFORMATION CONTACT: David A. Trissell, General Counsel, at 202–789–6820.

SUPPLEMENTARY INFORMATION:

Table of Contents

I. Introduction
II. Docketed Proceeding(s)

I. Introduction

The Commission gives notice that the Postal Service filed request(s) for the Commission to consider matters related to negotiated service agreement(s). The request(s) may propose the addition or removal of a negotiated service agreement from the market dominant or the competitive product list, or the modification of an existing product currently appearing on the market dominant or the competitive product list.

Section II identifies the docket number(s) associated with each Postal Service request, the title of each Postal Service request, the request's acceptance date, and the authority cited by the Postal Service for each request. For each request, the Commission appoints an officer of the Commission to represent the interests of the general public in the proceeding, pursuant to 39 U.S.C. 505 (Public Representative). Section II also establishes comment deadline(s) pertaining to each request.

The public portions of the Postal Service's request(s) can be accessed via the Commission's website (*http://www.prc.gov*). Non-public portions of the Postal Service's request(s), if any, can be accessed through compliance with the requirements of 39 CFR 3011.301.[1]

The Commission invites comments on whether the Postal Service's request(s) in the captioned docket(s) are consistent with the policies of title 39. For request(s) that the Postal Service states concern market dominant product(s), applicable statutory and regulatory requirements include 39 U.S.C. 3622, 39 U.S.C. 3642, 39 CFR part 3030, and 39 CFR part 3040, subpart B. For request(s) that the Postal Service states concern competitive product(s), applicable statutory and regulatory requirements include 39 U.S.C. 3632, 39 U.S.C. 3633, 39 U.S.C. 3642, 39 CFR part 3035, and 39 CFR part 3040, subpart B. Comment deadline(s) for each request appear in section II.

II. Docketed Proceeding(s)

1. *Docket No(s).:* MC2022–76 and CP2022–82; *Filing Title:* USPS Request to Add Parcel Select Contract 50 to Competitive Product List and Notice of Filing Materials Under Seal; *Filing Acceptance Date:* June 24, 2022; *Filing Authority:* 39 U.S.C. 3642, 39 CFR 3040.130 through 3040.135, and 39 CFR 3035.105; *Public Representative:* Kenneth R. Moeller; *Comments Due:* July 5, 2022.

[1] *See* Docket No. RM2018–3, Order Adopting Final Rules Relating to Non-Public Information, June 27, 2018, Attachment A at 19–22 (Order No. 4679).

This Notice will be published in the **Federal Register**.

Erica A. Barker,

Secretary.

[FR Doc. 2022–14000 Filed 6–29–22; 8:45 am]

BILLING CODE 7710–FW–P

SECURITIES AND EXCHANGE COMMISSION

[Release No. 34–95154; File No. SR–NYSEArca–2022–13]

Self-Regulatory Organizations; NYSE Arca, Inc.; Notice of Filing of Amendment No. 2 and Order Granting Accelerated Approval of a Proposed Rule Change, as Modified by Amendment No. 2, To Amend Rule 7.31–E(h)(3) Relating to Discretionary Pegged Orders

June 24, 2022.

I. Introduction

On March 9, 2022, NYSE Arca, Inc. (''NYSE Arca'' or the ''Exchange'') filed with the Securities and Exchange Commission (''Commission''), pursuant to Section 19(b)(1) of the Securities Exchange Act of 1934 (''Act'') [1] and Rule 19b–4 thereunder,[2] a proposed rule change to amend NYSE Arca Rule 7.31–E(h)(3) to modify certain factors relevant to the quote instability calculation for Discretionary Pegged Orders. The proposed rule change was published for comment in the **Federal Register** on March 28, 2022.[3] On May 9, 2022, pursuant to Section 19(b)(2) of the Act,[4] the Commission designated a longer period within which to approve the proposed rule change, disapprove the proposed rule change, or institute proceedings to determine whether to disapprove the proposed rule change.[5] On May 10, 2022, the Exchange filed Amendment No. 1 to the proposed rule change,[6] and on June 15, 2022, the Exchange filed Amendment No. 2 to the proposed rule change, which replaced and superseded in their entirety both the original filing and Amendment No. 1. The Commission has received no comments on the proposed rule change.

The Commission is publishing this notice to solicit comments on the proposed rule change, as modified by Amendment No. 2, from interested persons and is approving the proposed rule change, as modified by Amendment No. 2, on an accelerated basis.

II. Self-Regulatory Organization's Statement of the Purpose of, and Statutory Basis for, the Proposed Rule Change

In its filing with the Commission, the self-regulatory organization included statements concerning the purpose of, and basis for, the proposed rule change and discussed any comments it received on the proposed rule change. The text of those statements may be examined at the places specified in Item IV below. The Exchange has prepared summaries, set forth in sections A, B, and C below, of the most significant parts of such statements.

A. Self-Regulatory Organization's Statement of the Purpose of, and the Statutory Basis for, the Proposed Rule Change

1. Purpose

The Exchange proposes to amend Rule 7.31–E(h)(3) to modify certain factors relevant to the quote instability calculation for Discretionary Pegged Orders. The Discretionary Pegged Order is a non-displayed order type that is pegged to the same side of the PBBO.[7] The price of a Discretionary Pegged Order automatically adjusts as the PBBO moves, and a Discretionary Pegged Order will exercise the least amount of discretion necessary to trade with contra-side interest. A Discretionary Pegged Order will not exercise discretion if the PBBO is determined to be unstable via a quote instability calculation that assesses the probability of a change to the PBB or PBO (as described in further detail below), thereby offering protection against unfavorable executions during periods of quote instability.

Specifically, the Exchange proposes to amend Rule 7.31–E(h)(3)(D)(i)(D)(1)(a), which sets forth the quote stability coefficients. Under Rule 7.31–E(h)(3)(D)(i)(D)(3), the Exchange may modify the quote stability coefficients at any time, subject to a filing of a proposed rule change. The Exchange proposes such changes in this rule filing.

Discretionary Pegged Orders

Rule 7.31–E(h)(3) provides for Discretionary Pegged Orders, which are Pegged Orders [8] that may exercise price discretion from their working price to a discretionary price in order to trade with contra-side orders on the NYSE Arca Book, except during periods of quote instability as defined in Rule 7.31–E(h)(3)(D).

Rule 7.31–E(h)(3)(D) provides that the Exchange uses a quote instability calculation to assess a security's ''quote instability factor,'' or the probability of an imminent change to the current PBB to a lower price or PBO to a higher price. When quoting activity in a security meets predefined criteria and the quote instability factor calculated is greater than the Exchange's defined ''quote instability threshold,'' the Exchange treats the quote as unstable (''quote instability'' or a ''crumbling quote'').

Rule 7.31–E(h)(3)(D)(i) provides that the Exchange determines a quote to be unstable when, among other factors, the quote instability factor result from the quote stability calculation is greater than the quote instability threshold. To perform the quote stability calculation and determine the quote instability factor, the Exchange employs a fixed formula utilizing the quote stability coefficients and quote stability variables set forth in Rule 7.31–E(h)(3)(D)(i)(D)(1)(a) and Rule 7.31–E(h)(3)(D)(i)(D)(1)(b), respectively.

Proposed Rule Change

The Exchange proposes to update the quote stability coefficients used in the quote instability calculation, which have not been modified since Rule 7.31–E(h)(3) was adopted.[9] The proposed changes are intended to update the quote stability coefficients so that they are based on current market data and better calibrated to function on an

[1] 15 U.S.C. 78s(b)(1).

[2] 17 CFR 240.19b–4.

[3] *See* Securities Exchange Act Release No. 94490 (Mar. 22, 2022), 87 FR 17376 (Mar. 28, 2022) (''Notice'').

[4] 15 U.S.C. 78s(b)(2).

[5] *See* Securities Exchange Act Release No. 94869 (May 9, 2022), 87 FR 29417 (May 13, 2022). The Commission designated June 26, 2022, as the date by which the Commission shall approve or disapprove, or institute proceedings to determine whether to disapprove, the proposed rule change.

[6] Amendment No. 1 is available on the Commission's website at *https://www.sec.gov/comments/sr-nysearca-2022-13/srnysearca202213-20128473-292032.pdf.*

[7] As defined in NYSE Arca Rule 1.1, ''PBBO'' means the Best Protected Bid and the Best Protected Offer. Rule 1.1 also defines ''PBB'' as the highest Protected Bid and ''PBO'' as the lowest Protected Offer.

[8] A Pegged Order is a Limit Order that does not route with a working price that is pegged to a dynamic reference price. If the designated reference price is higher (lower) than the limit price of a Pegged Order to buy (sell), the working price will be the limit price of the order. *See* Rule 7.31–E(h).

[9] The Exchange adopted Rule 7.31–E(h)(3) governing Discretionary Pegged Orders in 2016. *See* Securities Exchange Act Release No. 78181 (June 28, 2016), 81 FR 43297 (July 1, 2016) (SR–NYSEArca–2016–44) (Notice of Filing of Amendment No. 1, and Order Granting Accelerated Approval of a Proposed Rule Change, as Modified by Amendment No. 1, to Add a New Discretionary Pegged Order). Discretionary Pegged Orders (with the current quote stability coefficients set forth in current Rules 7.31–E(h)(3)(D)(i)(D)(1)(a)(i) through (v)) have been available for use on the Exchange since March 21, 2022. *See https://www.nyse.com/trader-update/history#110000415898.*

exchange without an intentional delay mechanism and with deeper liquidity than other exchanges that offer similar functionality.[10]

The Exchange reviewed NYSE Arca market data from randomly selected days in the fourth quarter of 2021 to analyze the effectiveness of the quote stability coefficients in predicting changes to the PBBO. Specifically, the Exchange reviewed PBBO data, on a nanosecond level, for certain intervals throughout each randomly selected day to track changes to quotes on NYSE Arca and away markets. The Exchange used this data to generate and then test the effectiveness of the proposed quote stability coefficients, and based on its analysis, believes that modifying the quote stability coefficients would enable the Exchange to evaluate the quality of the PBBO more effectively. Specifically, the Exchange sampled market activity from randomly selected days in the fourth quarter of 2021 to simulate the performance of the quote instability calculation using both the current quote stability coefficients and the proposed quote stability coefficients. The Exchange observed that, in situations where the market price moved against the same side of the quote (*i.e.,* the PBB fell or the PBO rose) 10 milliseconds later, the proposed quote stability coefficients, when incorporated into the quote instability calculation, correctly predicted the price change approximately 17% more often than the current quote stability coefficients were able to predict the price change (*i.e.,* the current quote stability coefficients under-predicted when a price change would occur).

Accordingly, the Exchange believes that the proposed quote stability coefficients would be more accurate than the current quote stability coefficients in identifying changes to the PBBO and thus more effective in protecting Discretionary Pegged Orders from unfavorable executions. The Exchange thus proposes to modify the quote stability coefficients set forth in Rule 7.31–E(h)(3)(D)(i)(D)(1)(a)(i) through (v) as follows:

Quote stability coefficient	Current value	Proposed value
C0	−2.39515	−1.793885
C1	−0.76504	−0.600796
C2	0.07599	0.0776515
C3	0.38374	0.492649
C4	0.14466	0.1631485

The Exchange believes that its proposed modification of the quote stability coefficients, based on the market data analysis described above, would improve the accuracy of the fixed formula used to perform the quote instability calculation. Specifically, the Exchange believes that the proposed quote stability coefficients, which have been adjusted to reflect more recent activity on the Exchange, would improve the calibration of the quote instability calculation to activity on the Exchange, thereby improving the Exchange's ability to predict whether there is quote instability and protect Discretionary Pegged Orders from exercising discretion when the PBBO is unstable.

Because of the technology changes associated with this proposed rule change, the Exchange will announce the implementation date by Trader Update. Subject to approval of this proposed rule change, the Exchange anticipates that it will implement the proposed quote stability coefficients no later than in the third quarter of 2022.

2. Statutory Basis

The proposed rule change is consistent with Section 6(b) of the Act,[11] in general, and furthers the objectives of Section 6(b)(5),[12] in particular, because it is designed to prevent fraudulent and manipulative acts and practices, to promote just and equitable principles of trade, to foster cooperation and coordination with persons engaged in facilitating transactions in securities, to remove impediments to, and perfect the mechanism of, a free and open market and a national market system and, in general, to protect investors and the public interest.

The Exchange believes that the proposed change would promote just and equitable principles of trade, remove impediments to, and perfect the mechanism of, a free and open market and a national market system, and protect investors and the public interest because it is designed to increase the effectiveness of the quote instability calculation used to determine whether a crumbling quote exists. As discussed above, the proposed change is based on the Exchange's analysis of market data, which supports that the proposed quote stability coefficients would accurately identify changes to the PBBO more frequently than the current quote stability coefficients and, accordingly, that the proposed change would improve the accuracy of the Exchange's quote instability calculation. Accordingly, the Exchange believes that the proposed change would remove impediments to, and perfect the mechanism of, a free and open market and a national market system, as well as protect investors and the public interest, by enhancing the Exchange's protection of Discretionary Pegged Orders. Specifically, because the proposed quote stability coefficients were derived through an analysis of more recent market data and are calibrated to reflect current activity on the Exchange (including to adapt them to function on an exchange without an intentional delay mechanism and with deeper liquidity than other exchanges that offer similar functionality), the Exchange believes that the proposed change would improve the effectiveness of the quote instability calculation in predicting periods of quote instability and thus enhance the extent to which Discretionary Pegged Orders would be protected from unfavorable executions.

B. Self-Regulatory Organization's Statement on Burden on Competition

The Exchange does not believe that the proposed rule change will impose any burden on competition that is not necessary or appropriate in furtherance of the purposes of the Act. The Exchange believes that the proposed change would promote competition by improving the accuracy of the quote instability calculation, thereby enhancing the protection of Discretionary Pegged Orders from unfavorable executions during periods of quote instability.

C. Self-Regulatory Organization's Statement on Comments on the Proposed Rule Change Received From Members, Participants, or Others

No written comments were solicited or received with respect to the proposed rule change.

III. Discussion and Commission Findings

After careful review, the Commission finds that the proposed rule change, as modified by Amendment No. 2, is consistent with the requirements of the Act and the rules and regulations thereunder applicable to a national

[10] The Exchange notes that its rules governing the Discretionary Pegged Order, including the formula for the quote instability calculation, are based on the Investors Exchange LLC (''IEX'') Discretionary Peg Order (''D-Peg Order''), which functions in conjunction with IEX's speed bump. *See id.* The Exchange does not anticipate any issues in connection with the introduction of the order type, including because such orders would be processed similarly to Discretionary Pegged Orders on its affiliated exchange, NYSE American LLC (''NYSE American''). NYSE American, which also does not currently function with any intentional delay, offers a Discretionary Pegged Order as set forth in NYSE American Rule 7.31E(h)(3), which is substantially the same as NYSE Arca Rule 7.31–E(h)(3).

[11] 15 U.S.C. 78f(b).

[12] 15 U.S.C. 78f(b)(5).

securities exchange.[13] In particular, the Commission finds that the proposal is consistent with Section 6(b)(5) of the Act,[14] which requires that the rules of an exchange be designed to prevent fraudulent and manipulative acts and practices, to promote just and equitable principles of trade, to foster cooperation and coordination with persons engaged in regulating, clearing, settling, processing information with respect to, and facilitating transactions in securities, to remove impediments to and perfect the mechanism of a free and open market and a national market system, and, in general, to protect investors and the public interest.

As described above, the Exchange represents that the proposed coefficients were calibrated to reflect the Exchange's current activity and market structure and are based on an analysis of recent market data and on backtesting that indicates that the proposed quote stability coefficients and resulting updated quote stability formula and would more accurately identify if the PBBO is ''crumbling'' compared to the current quote stability coefficients. The Commission finds that the proposed rule change is consistent with the protection of investors and the public interest because it will modify the coefficients of the quote instability formula in a way that is reasonably designed to improve the effectiveness of the quote instability calculation in predicting periods of quote instability and to thereby enhance the effectiveness of Discretionary Pegged Orders against unfavorable executions during periods of quote instability.

For the reasons discussed above, the Commission finds that this proposed rule change, as modified by Amendment No. 2, is consistent with the requirements of the Act.

IV. Solicitation of Comments on Amendment No. 2

Interested persons are invited to submit written data, views, and arguments concerning the foregoing, including whether Amendment No. 2 is consistent with the Act. Comments may be submitted by any of the following methods:

Electronic Comments

- Use the Commission's internet comment form (*http://www.sec.gov/rules/sro.shtml*); or
- Send an email to *rule-comments@sec.gov.* Please include File No. SR–NYSEArca–2022–13 on the subject line.

Paper Comments

- Send paper comments in triplicate to Secretary, Securities and Exchange Commission, 100 F Street NE, Washington, DC 20549–1090.

All submissions should refer to File No. SR–NYSEArca–2022–13. The file numbers should be included on the subject line if email is used. To help the Commission process and review your comments more efficiently, please use only one method. The Commission will post all comments on the Commission's internet website (*http://www.sec.gov/rules/sro.shtml*). Copies of the submission, all subsequent amendments, all written statements with respect to the proposed rule change that are filed with the Commission, and all written communications relating to the proposed rule change between the Commission and any person, other than those that may be withheld from the public in accordance with the provisions of 5 U.S.C. 552, will be available for website viewing and printing in the Commission's Public Reference Room, 100 F Street NE, Washington, DC 20549, on official business days between the hours of 10:00 a.m. and 3:00 p.m. Copies of the filing will also be available for inspection and copying at the principal office of the Exchange. All comments received will be posted without change. Persons submitting comments are cautioned that we do not redact or edit personal identifying information from comment submissions. You should submit only information that you wish to make publicly available. All submissions should refer to File No. SR–NYSEArca–2022–13 and should be submitted on or before July 21, 2022.

V. Accelerated Approval of Proposed Rule Change, as Modified by Amendment No. 2

The Commission finds good cause to approve the proposed rule change, as modified by Amendment No. 2, prior to the thirtieth day after the date of publication of notice of the amended proposal in the **Federal Register**. In Amendment No. 2, the Exchange amended the proposal to: (1) provide additional explanation of and rationale for using Discretionary Pegged Orders; (2) provide additional explanation of the purpose of the proposed rule change; and (3) provide additional explanation regarding how the proposed quote instability coefficients were formulated and tested; and (4) state when the Exchange expects to implement the proposed change to the quote instability coefficients. Amendment No. 2 adds clarity and justification to the proposal and does not substantively alter the proposed rule change as described in the Notice. Accordingly, the Commission finds good cause, pursuant to Section 19(b)(2) of the Act,[15] to approve the proposed rule change, as modified by Amendment No. 2, on an accelerated basis.

VI. Conclusion

It is therefore ordered, pursuant to Section 19(b)(2) of the Act,[16] that the proposed rule change (SR–NYSEArca–2022–13), as modified by Amendment No. 2, be, and hereby is, approved on an accelerated basis.

For the Commission, by the Division of Trading and Markets, pursuant to delegated authority.[17]

J. Matthew DeLesDernier,

Assistant Secretary.

[FR Doc. 2022–13962 Filed 6–29–22; 8:45 am]

BILLING CODE 8011–01–P

[13] In approving this proposed rule change, the Commission has considered the proposed rule's impact on efficiency, competition, and capital formation. *See* 15 U.S.C. 78c(f).

[14] 15 U.S.C. 78f(b)(5).

[15] 15 U.S.C. 78s(b)(2).

[16] *Id.*

[17] 17 CFR 200.30–3(a)(12).

SECURITIES AND EXCHANGE COMMISSION

Investment Company Act Release No. 34636

June 24, 2022.

AGENCY: Securities and Exchange Commission (''Commission'' or ''SEC'')

ACTION: Notice of applications for deregistration under Section 8(f) of the Investment Company Act of 1940.

The following is a notice of applications for deregistration under section 8(f) of the Investment Company Act of 1940 for the month of June 2022. A copy of each application may be obtained via the Commission's website by searching for the applicable file number listed below, or for an applicant using the Company name search field, on the SEC's EDGAR system. The SEC's EDGAR system may be searched at *https://www.sec.gov/edgar/searchedgar/legacy/companysearch.html.* You may also call the SEC's Public Reference Room at (202) 551–8090. An order granting each application will be issued unless the SEC orders a hearing. Interested persons may request a hearing on any application by emailing the SEC's Secretary at *Secretarys-Office@sec.gov* and serving the relevant applicant with a copy of the request by email, if an email address is listed for

the relevant applicant below, or personally or by mail, if a physical address is listed for the relevant applicant below. Hearing requests should be received by the SEC by 5:30 p.m. on July 19, 2022, and should be accompanied by proof of service on applicants, in the form of an affidavit or, for lawyers, a certificate of service. Pursuant to Rule 0–5 under the Act, hearing requests should state the nature of the writer's interest, any facts bearing upon the desirability of a hearing on the matter, the reason for the request, and the issues contested. Persons who wish to be notified of a hearing may request notification by writing to the Commission's Secretary at *Secretarys-Office@sec.gov*.

ADDRESSES: The Commission: *Secretarys-Office@sec.gov*.

FOR FURTHER INFORMATION CONTACT: Shawn Davis, Assistant Director, at (202) 551–6413 or Chief Counsel's Office at (202) 551–6821; SEC, Division of Investment Management, Chief Counsel's Office, 100 F Street NE, Washington, DC 20549–8010.

First Trust Senior Floating Rate 2022 Target Term Fund [File No. 811–23199]

Summary: Applicant, a closed-end investment company, seeks an order declaring that it has ceased to be an investment company. On December 15, 2021, applicant made liquidating distributions to its shareholders based on net asset value. Expenses of $4,111 incurred in connection with the liquidation were paid by the applicant.

Filing Date: The application was filed on May 26, 2022.

Applicant's Address: roykim@chapman.com.

Global High Income Fund Inc. [File No. 811–07540]

Summary: Applicant, a closed-end investment company, seeks an order declaring that it has ceased to be an investment company. On April 18, 2016, and December 31, 2019, applicant made a liquidating distributions to its shareholders based on net asset value. Expenses of $83,629 incurred in connection with the liquidation were paid by the applicant.

Filing Date: The application was filed on January 25, 2021.

Applicant's Address: stephen.cohen@dechert.com.

State Farm Variable Product Trust [File No. 811–08073]

Summary: Applicant seeks an order declaring that it has ceased to be an investment company. The applicant has transferred its assets to BlackRock Variable Series Funds, Inc., and BlackRock Variable Series Funds II, Inc., and on October 29, 2018 made a final distribution to its shareholders based on net asset value. Expenses of $1,209,961.75 incurred in connection with the reorganization were paid by the applicant's investment adviser.

Filing Date: The application was filed on December 21, 2018, and amended on May 1, 2019, and March 15, 2022.

Applicant's Address: david.moore.ct95@statefarm.com.

For the Commission, by the Division of Investment Management, pursuant to delegated authority.

J. Matthew DeLesDernier,

Assistant Secretary.

[FR Doc. 2022–13951 Filed 6–29–22; 8:45 am]

BILLING CODE 8011–01–P

SECURITIES AND EXCHANGE COMMISSION

[Release No. 34–95157; File No. SR–NYSECHX–2022–13]

Self-Regulatory Organizations; NYSE Chicago, Inc.; Notice of Filing and Immediate Effectiveness of Proposed Rule Change for Certain Non-Substantive Clarifying Changes to Article 7, Rule 12

June 24, 2022.

Pursuant to Section 19(b)(1) of the Securities Exchange Act of 1934 (''Act'') [1] and Rule 19b–4 thereunder,[2] notice is hereby given that, on June 21, 2022, the NYSE Chicago, Inc. (''NYSE Chicago'' or the ''Exchange'') filed with the Securities and Exchange Commission (''Commission'') the proposed rule change as described in Items I and II below, which Items have been prepared by the self-regulatory organization. The Commission is publishing this notice to solicit comments on the proposed rule change from interested persons.

I. Self-Regulatory Organization's Statement of the Terms of Substance of the Proposed Rule Change

The Exchange proposes certain non-substantive clarifying changes to Article 7, Rule 12. The proposed rule change is available on the Exchange's website at *www.nyse.com,* at the principal office of the Exchange, and at the Commission's Public Reference Room.

[1] 15 U.S.C. 78s(b)(1).

[2] 17 CFR 240.19b–4.

II. Self-Regulatory Organization's Statement of the Purpose of, and Statutory Basis for, the Proposed Rule Change

In its filing with the Commission, the self-regulatory organization included statements concerning the purpose of, and basis for, the proposed rule change and discussed any comments it received on the proposed rule change. The text of those statements may be examined at the places specified in Item IV below. The Exchange has prepared summaries, set forth in sections A, B, and C below, of the most significant parts of such statements.

A. Self-Regulatory Organization's Statement of the Purpose of, and the Statutory Basis for, the Proposed Rule Change

1. Purpose

The Exchange proposes certain non-substantive clarifying changes to Article 7, Rule 12 (Failure to Pay Fees).

The Exchange recently adopted rules relating to investigation, discipline, sanction, and other procedural rules based on the rules based on the text of the NYSE Arca Rule 10.8000 and Rule 10.9000 Series, with certain changes.[3] In connection with the adoption of these new disciplinary rules, the Exchange made certain changes to Article 7, Rule 12, which previously governed the non-payment of any debt for Trading Permit fees, fines, transaction fees, or other sums owing the Exchange or its subsidiaries, to reflect that failure to pay any fine, sanction or cost levied in connection with a disciplinary action would be governed by Rule 10.8320 (Payment of Fines, Other Monetary Sanctions, or Costs; Summary Action for Failure to Pay). Specifically, the Exchange added the following text to Article 7, Rule 12:

> Notwithstanding the foregoing, any failure to pay any fine, sanction or cost levied in connection with a disciplinary action shall be governed by Rule 10.8320.

For the avoidance of doubt, and to clarify the application of Article 7, Rule 12 and Rule 10.8320, the Exchange proposes to amend the above sentence in Article 7, Rule 12 as follows (proposed changes are italicized):

> Notwithstanding the foregoing, any failure to pay any fine, sanction or cost levied in connection with a disciplinary action *initiated under Article 12 for which a decision was issued on or after [insert date]* shall be governed by Rule 10.8320. *For*

[3] *See* Securities Exchange Act Release No. 95020 (June 1, 2022), 87 FR 35034 (June 8, 2022) (SR–NYSECHX–2022–10) (''Release No. 95020'').

disciplinary decisions issued prior to such date, Article 7, Rule 12 shall apply.[4]

The proposed change is consistent with Rule 10.8320(d), which provides that the Exchange may exercise the summary authority set forth in Rules 10.8320(b) and (c) with respect to non-payment of a fine, monetary sanction, or cost assessed in a disciplinary action initiated under Article 12 for which a decision was issued on or after the effective date of the new disciplinary rules.

The Exchange believes that the proposed change would add clarity, transparency and consistency to the Exchange's rules.

2. Statutory Basis

The proposed rule change is consistent with Section 6(b) of the Act,[5] in general, and furthers the objectives of Section 6(b)(5) of the Act,[6] in particular, in that it is designed to prevent fraudulent and manipulative acts and practices, to promote just and equitable principles of trade, to foster cooperation and coordination with persons engaged in facilitating transactions in securities, to remove impediments to, and perfect the mechanism of, a free and open market and a national market system and, in general, to protect investors and the public interest.

In particular, the Exchange believes that the proposed non-substantive clarifying changes would remove impediments to and perfect the mechanism of a free and open market and a national market system and, in general, protect investors and the public interest because the proposed non-substantive changes would add clarity, transparency and consistency to the Exchange's rules. The Exchange believes that market participants would benefit from the increased clarity, thereby reducing potential confusion and ensuring that persons subject to the Exchange's jurisdiction, regulators, and the investing public can more easily navigate and understand the Exchange's rules.

B. Self-Regulatory Organization's Statement on Burden on Competition

The Exchange does not believe that the proposed rule change will impose any burden on competition that is not necessary or appropriate in furtherance of the purposes of the Act. The proposed rule change is not intended to address competitive issues but is rather concerned with making non-substantive clarifying changes to the Exchange rules. Since the proposal does not substantively modify system functionality or processes on the Exchange, the proposed changes will not impose any burden on competition.

C. Self-Regulatory Organization's Statement on Comments on the Proposed Rule Change Received From Members, Participants, or Others

No written comments were solicited or received with respect to the proposed rule change.

III. Date of Effectiveness of the Proposed Rule Change and Timing for Commission Action

The Exchange has filed the proposed rule change pursuant to Section 19(b)(3)(A) of the Act[7] and Rule 19b–4(f)(6)[8] thereunder. Because the foregoing proposed rule change does not: (i) significantly affect the protection of investors or the public interest; (ii) impose any significant burden on competition; and (iii) become operative for 30 days from the date on which it was filed, or such shorter time as the Commission may designate, it has become effective pursuant to Section 19(b)(3)(A) of the Act[9] and Rule 19b–4(f)(6)[10] thereunder.

A proposed rule change filed under Rule 19b–4(f)(6)[11] normally does not become operative prior to 30 days after the date of the filing. However, pursuant to Rule 19b–4(f)(6)(iii),[12] the Commission may designate a shorter time if such action is consistent with the protection of investors and the public interest. The Exchange has asked the Commission to waive the 30-day operative delay to allow the proposed changes to be effective at the same time as the announced date of the new disciplinary rules. The Commission notes that the proposed changes to Article 12, Rule 7, clarify and make the rule consistent with the transition from the old to the new disciplinary rules recently adopted by the Exchange and do not raise any new or novel issues.[13] Therefore, the Commission believes that waiving the 30-day operative delay is consistent with the protection of investors and the public interest. Accordingly, the Commission designates the proposed rule change to be operative upon filing.[14]

At any time within 60 days of the filing of the proposed rule change, the Commission summarily may temporarily suspend such rule change if it appears to the Commission that such action is necessary or appropriate in the public interest, for the protection of investors, or otherwise in furtherance of the purposes of the Act. If the Commission takes such action, the Commission will institute proceedings to determine whether the proposed rule change should be approved or disapproved.

IV. Solicitation of Comments

Interested persons are invited to submit written data, views, and arguments concerning the foregoing, including whether the proposed rule change is consistent with the Act. Comments may be submitted by any of the following methods:

Electronic Comments

- Use the Commission's internet comment form (*http://www.sec.gov/rules/sro.shtml*); or
- Send an email to *rule-comments@sec.gov*. Please include File Number SR–NYSECHX–2022–13 on the subject line.

Paper Comments

- Send paper comments in triplicate to Secretary, Securities and Exchange Commission, 100 F Street NE, Washington, DC 20549–1090.

All submissions should refer to File Number SR–NYSECHX–2022–13. This file number should be included on the subject line if email is used. To help the Commission process and review your comments more efficiently, please use only one method. The Commission will post all comments on the Commission's internet website (*http://www.sec.gov/rules/sro.shtml*). Copies of the submission, all subsequent amendments, all written statements with respect to the proposed rule change that are filed with the Commission, and all written communications relating to the proposed rule change between the

[4] On June 3, 2022, the Exchange announced that the new disciplinary rules will be effective on July 5, 2022. *See* Release No. 95020, 87 FR at 35041; NYSE Chicago RM–22–02 (June 3, 2022). Once the new disciplinary rules are effective, the Exchange will replace ''insert date'' where it appears in the new disciplinary rules, including as proposed in Article 7, Rule 12, with that date.

[5] 15 U.S.C. 78f(b).

[6] 15 U.S.C. 78f(b)(5).

[7] 15 U.S.C. 78s(b)(3)(A).

[8] 17 CFR 240.19b–4(f)(6).

[9] 15 U.S.C. 78s(b)(3)(A).

[10] 17 CFR 240.19b–4(f)(6). In addition, Rule 19b–4(f)(6)(iii) requires the Exchange to give the Commission written notice of the Exchange's intent to file the proposed rule change, along with a brief description and text of the proposed rule change, at least five business days prior to the date of filing of the proposed rule change, or such shorter time as designated by the Commission. The Exchange has satisfied this requirement.

[11] 17 CFR 240.19b–4(f)(6).

[12] 17 CFR 240.19b–4(f)(6).

[13] *See supra* note 4 and accompanying text.

[14] For purposes only of waiving the 30-day operative delay, the Commission also has considered the proposed rule's impact on efficiency, competition, and capital formation. *See* 15 U.S.C. 78c(f).

Commission and any person, other than those that may be withheld from the public in accordance with the provisions of 5 U.S.C. 552, will be available for website viewing and printing in the Commission's Public Reference Room, 100 F Street NE, Washington, DC 20549 on official business days between the hours of 10:00 a.m. and 3:00 p.m. Copies of the filing also will be available for inspection and copying at the principal office of the Exchange. All comments received will be posted without change. Persons submitting comments are cautioned that we do not redact or edit personal identifying information from comment submissions. You should submit only information that you wish to make available publicly. All submissions should refer to File Number SR–NYSECHX–2022–13 and should be submitted on or before July 21, 2022.

For the Commission, by the Division of Trading and Markets, pursuant to delegated authority.[15]

J. Matthew DeLesDernier,

Assistant Secretary.

[FR Doc. 2022–13963 Filed 6–29–22; 8:45 am]

BILLING CODE 8011–01–P

SECURITIES AND EXCHANGE COMMISSION

[Release No. 34–95153; File No. SR–NYSEAMER–2022–15]

Self-Regulatory Organizations; NYSE American LLC; Notice of Filing of Amendment No. 2 and Order Granting Accelerated Approval of a Proposed Rule Change, as Modified by Amendment No. 2, To Amend Rule 7.31–E(h)(3) Relating to Discretionary Pegged Orders

June 24, 2022.

I. Introduction

On March 9, 2022, NYSE American LLC (''NYSE American'' or the ''Exchange'') filed with the Securities and Exchange Commission (''Commission''), pursuant to Section 19(b)(1) of the Securities Exchange Act of 1934 (''Act'')[1] and Rule 19b–4 thereunder,[2] a proposed rule change to amend NYSE American Rule 7.31–E(h)(3) to modify certain factors relevant to the quote instability calculation for Discretionary Pegged Orders. The proposed rule change was published for comment in the **Federal Register** on March 28, 2022.[3] On May 6, 2022, pursuant to Section 19(b)(2) of the Act,[4] the Commission designated a longer period within which to approve the proposed rule change, disapprove the proposed rule change, or institute proceedings to determine whether to disapprove the proposed rule change.[5]

On May 13, 2022, the Exchange filed Amendment No. 1 to the proposed rule change,[6] and on June 15, 2022, the Exchange filed Amendment No. 2 to the proposed rule change, which replaced and superseded in their entirety both the original filing and Amendment No. 1.

The Commission is publishing this notice to solicit comments on the proposed rule change, as modified by Amendment No. 2, from interested persons and is approving the proposed rule change, as modified by Amendment No. 2, on an accelerated basis.

II. Self-Regulatory Organization's Statement of the Purpose of, and Statutory Basis for, the Proposed Rule Change

In its filing with the Commission, the self-regulatory organization included statements concerning the purpose of, and basis for, the proposed rule change and discussed any comments it received on the proposed rule change. The text of those statements may be examined at the places specified in Item IV below. The Exchange has prepared summaries, set forth in sections A, B, and C below, of the most significant parts of such statements.

A. Self-Regulatory Organization's Statement of the Purpose of, and the Statutory Basis for, the Proposed Rule Change

1. Purpose

The Exchange proposes to amend Rule 7.31E(h)(3) to modify certain factors relevant to the quote instability calculation for Discretionary Pegged Orders. The Discretionary Pegged Order is a non-displayed order type that is pegged to same side of the PBBO.[7] The price of a Discretionary Pegged Order automatically adjusts as the PBBO moves, and a Discretionary Pegged Order will exercise the least amount of discretion necessary to trade with contra-side interest. A Discretionary Pegged Order will not exercise discretion if the PBBO is determined to be unstable via a quote instability calculation that assesses the probability of a change to the PBB or PBO (as described in further detail below), thereby offering protection against unfavorable executions during periods of quote instability.

Specifically, the Exchange proposes to amend Rule 7.31E(h)(3)(D)(i)(D)(1)(a), which sets forth the quote stability coefficients. Under Rule 7.31E(h)(3)(D)(i)(D)(3), the Exchange may modify the quote stability coefficients at any time, subject to a filing of a proposed rule change. The Exchange proposes such changes in this rule filing.

Discretionary Pegged Orders

Rule 7.31E(h)(3) provides for Discretionary Pegged Orders, which are Pegged Orders[8] that may exercise price discretion from their working price to a discretionary price in order to trade with contra-side orders on the Exchange Book, except during periods of quote instability as defined in Rule 7.31E(h)(3)(D).

Rule 7.31E(h)(3)(D) provides that the Exchange uses a quote instability calculation to assess a security's ''quote instability factor,'' or the probability of an imminent change to the current PBB to a lower price or PBO to a higher price. When quoting activity in a security meets predefined criteria and the quote instability factor calculated is greater than the Exchange's defined ''quote instability threshold,'' the Exchange treats the quote as unstable (''quote instability'' or a ''crumbling quote'').

Rule 7.31E(h)(3)(D)(i) provides that the Exchange determines a quote to be unstable when, among other factors, the quote instability factor result from the quote stability calculation is greater than the quote instability threshold. To perform the quote stability calculation and determine the quote instability

---

[15] 17 CFR 200.30–3(a)(12), (59).

[1] 15 U.S.C. 78s(b)(1).

[2] 17 CFR 240.19b–4.

[3] *See* Securities Exchange Act Release No. 94487 (Mar. 22, 2022), 87 FR 17349 (Mar. 28, 2022) (''Notice''). The Commission has received one comment letter, which does not relate to the substance of the proposed rule change. The comment letter is available at *https://www.sec.gov/comments/sr-nyseamer-2022-15/srnyseamer202215-20123731-279990.htm.*

[4] 15 U.S.C. 78s(b)(2).

[5] *See* Securities Exchange Act Release No. 94865 (May 6, 2022), 87 FR 29192 (May 12, 2022). The Commission designated June 26, 2022, as the date by which the Commission shall approve or disapprove, or institute proceedings to determine whether to disapprove, the proposed rule change.

[6] Amendment No. 1 is available on the Commission's website at *https://www.sec.gov/comments/sr-nyseamer-2022-15/srnyseamer202215-20128710-294076.pdf.*

[7] As defined in NYSE American Rule 1.1E(dd), ''PBBO'' means the Best Protected Bid and the Best Protected Offer. Rule 1.1E(dd) also defines ''PBB'' as the highest Protected Bid and ''PBO'' as the lowest Protected Offer.

[8] A Pegged Order is a Limit Order that does not route with a working price that is pegged to a dynamic reference price. If the designated reference price is higher (lower) than the limit price of a Pegged Order to buy (sell), the working price will be the limit price of the order. *See* Rule 7.31E(h).

factor, the Exchange employs a fixed formula utilizing the quote stability coefficients and quote stability variables set forth in Rule 7.31E(h)(3)(D)(i)(D)(1)(a) and Rule 7.31E(h)(3)(D)(i)(D)(1)(b), respectively.

Proposed Rule Change

The Exchange proposes to update the quote stability coefficients used in the quote instability calculation, which have not been modified since Rule 7.31E(h)(3) was adopted. The proposed changes are intended to update the quote stability coefficients to be based on more current market data and activity on the Exchange, including to reflect the Exchange's elimination of a delay mechanism that previously added latency to certain order processing (the ''Delay Mechanism'').[9]

The Exchange reviewed NYSE American market data from randomly selected days in the fourth quarter of 2021 to analyze the effectiveness of the quote stability coefficients in predicting changes to the PBBO. Specifically, the Exchange reviewed PBBO data, on a nanosecond level, for certain intervals throughout each randomly selected day to track changes to quotes on NYSE American and away markets. The Exchange used this data to generate and then test the effectiveness of the proposed quote stability coefficients, and based on its analysis, believes that modifying the quote stability coefficients would enable the Exchange to evaluate the quality of the PBBO more effectively. Specifically, the Exchange sampled market activity from randomly selected days in the fourth quarter of 2021 to simulate the performance of the quote instability calculation using both the current quote stability coefficients and the proposed quote stability coefficients. The Exchange observed that, in situations where the market price moved against the same side of the quote (*i.e.,* the PBB fell or the PBO rose) 10 milliseconds later, the proposed quote stability coefficients, when incorporated into the quote instability calculation, correctly predicted the price change approximately 13% more often than the current quote stability coefficients were able to predict the price change (*i.e.,* the current quote stability coefficients under-predicted when a price change would occur).

Accordingly, the Exchange believes that the proposed quote stability coefficients would be more accurate than the current quote stability coefficients in identifying changes to the PBBO and thus more effective in protecting Discretionary Pegged Orders from unfavorable executions. The Exchange thus proposes to modify the quote stability coefficients set forth in Rule 7.31E(h)(3)(D)(i)(D)(1)(a)(i) through (v) as follows:

Quote stability coefficient	Current value	Proposed value
C0	−2.39515	−2.174901
C1	−0.76504	−0.561555
C2	0.07599	0.077739
C3	0.38374	0.4860265
C4	0.14466	0.1627735

The Exchange believes that its proposed modification of the quote stability coefficients, based on the market data analysis described above, would improve the accuracy of the fixed formula used to perform the quote instability calculation. Specifically, the Exchange believes that the proposed quote stability coefficients, which have been adjusted to reflect more recent activity on the Exchange (including the elimination of the Delay Mechanism), would improve the calibration of the quote instability calculation to activity on the Exchange, thereby enhancing the Exchange's ability to predict whether there is quote instability and protect Discretionary Pegged Orders from exercising discretion when the PBBO is unstable.

Because of the technology changes associated with this proposed rule change, the Exchange will announce the implementation date by Trader Update. Subject to approval of this proposed rule change, the Exchange anticipates that it will implement the proposed quote stability coefficients no later than in the third quarter of 2022.

2. Statutory Basis

The proposed rule change is consistent with Section 6(b) of the Act,[10] in general, and furthers the objectives of Section 6(b)(5),[11] in particular, because it is designed to prevent fraudulent and manipulative acts and practices, to promote just and equitable principles of trade, to foster cooperation and coordination with persons engaged in facilitating transactions in securities, to remove impediments to, and perfect the mechanism of, a free and open market and a national market system and, in general, to protect investors and the public interest.

The Exchange believes that the proposed change would promote just and equitable principles of trade, remove impediments to, and perfect the mechanism of, a free and open market and a national market system, and protect investors and the public interest because it is designed to increase the effectiveness of the quote instability calculation used to determine whether a crumbling quote exists. As discussed above, the proposed change is based on the Exchange's analysis of market data, which supports that the proposed quote stability coefficients would accurately identify changes to the PBBO more frequently than the current quote stability coefficients and, accordingly, that the proposed change would improve the accuracy of the Exchange's quote instability calculation. Accordingly, the Exchange believes that the proposed change would remove impediments to, and perfect the mechanism of, a free and open market and a national market system, as well as protect investors and the public interest, by enhancing the Exchange's protection of Discretionary Pegged Orders. Specifically, because the proposed quote stability coefficients were derived through an analysis of more recent market data and are calibrated to reflect current activity on the Exchange (including to account for the fact that the Exchange no longer operates with the Delay Mechanism), the Exchange believes that the proposed change would improve the effectiveness of the quote instability calculation in predicting periods of quote instability and thus enhance the extent to which Discretionary Pegged Orders would be protected from unfavorable executions.

B. Self-Regulatory Organization's Statement on Burden on Competition

The Exchange does not believe that the proposed rule change will impose any burden on competition that is not necessary or appropriate in furtherance of the purposes of the Act. The Exchange believes that the proposed change would promote competition by improving the accuracy of the quote instability calculation, thereby enhancing the protection of Discretionary Pegged Orders from unfavorable executions during periods of quote instability.

[9] The Exchange eliminated the Delay Mechanism, which added a delay of 350 microseconds of latency to specified order processing, in 2019. *See* Securities Exchange Act Release No. 87550 (November 15, 2019), 84 FR 64359 (November 21, 2019) (SR–NYSEAMER–2019–48) (Notice of Filing and Immediate Effectiveness of Proposed Rule Change to Amend Exchange Rules 1.1E and 7.29E to Eliminate the Delay Mechanism and Amend Exchange Rule 7.31E and Related Exchange Rules to Re-Introduce Previously-Approved Order Types and Modifiers).

[10] 15 U.S.C. 78f(b).

[11] 15 U.S.C. 78f(b)(5).

C. Self-Regulatory Organization's Statement on Comments on the Proposed Rule Change Received From Members, Participants, or Others

No written comments were solicited or received with respect to the proposed rule change.

III. Discussion and Commission Findings

After careful review, the Commission finds that the proposed rule change, as modified by Amendment No. 2, is consistent with the requirements of the Act and the rules and regulations thereunder applicable to a national securities exchange.[12] In particular, the Commission finds that the proposal is consistent with Section 6(b)(5) of the Act,[13] which requires that the rules of an exchange be designed to prevent fraudulent and manipulative acts and practices, to promote just and equitable principles of trade, to foster cooperation and coordination with persons engaged in regulating, clearing, settling, processing information with respect to, and facilitating transactions in securities, to remove impediments to and perfect the mechanism of a free and open market and a national market system, and, in general, to protect investors and the public interest.

As described above, the Exchange represents that the proposed coefficients were calibrated to reflect the Exchange's current activity and market structure and are based on an analysis of recent market data and on backtesting that indicates that the proposed quote stability coefficients and resulting updated quote stability formula and would more accurately identify if the PBBO is ''crumbling'' compared to the current quote stability coefficients. The Commission finds that the proposed rule change is consistent with the protection of investors and the public interest because it will modify the coefficients of the quote instability formula in a way that is reasonably designed to improve the effectiveness of the quote instability calculation in predicting periods of quote instability and to thereby enhance the effectiveness of Discretionary Pegged Orders against unfavorable executions during periods of quote instability.

For the reasons discussed above, the Commission finds that this proposed rule change, as modified by Amendment No. 2, is consistent with the requirements of the Act.

[12] In approving this proposed rule change, the Commission has considered the proposed rule's impact on efficiency, competition, and capital formation. *See* 15 U.S.C. 78c(f).

[13] 15 U.S.C. 78f(b)(5).

IV. Solicitation of Comments on Amendment No. 2

Interested persons are invited to submit written data, views, and arguments concerning the foregoing, including whether Amendment No. 2 is consistent with the Act. Comments may be submitted by any of the following methods:

Electronic Comments

- Use the Commission's internet comment form (*http://www.sec.gov/rules/sro.shtml*); or
- Send an email to *rule-comments@sec.gov*. Please include File No. SR–NYSEAMER–2022–15 on the subject line.

Paper Comments

- Send paper comments in triplicate to Secretary, Securities and Exchange Commission, 100 F Street NE, Washington, DC 20549–1090.

All submissions should refer to File No. SR–NYSEAMER–2022–15. The file numbers should be included on the subject line if email is used. To help the Commission process and review your comments more efficiently, please use only one method. The Commission will post all comments on the Commission's internet website (*http://www.sec.gov/rules/sro.shtml*). Copies of the submission, all subsequent amendments, all written statements with respect to the proposed rule change that are filed with the Commission, and all written communications relating to the proposed rule change between the Commission and any person, other than those that may be withheld from the public in accordance with the provisions of 5 U.S.C. 552, will be available for website viewing and printing in the Commission's Public Reference Room, 100 F Street NE, Washington, DC 20549, on official business days between the hours of 10:00 a.m. and 3:00 p.m. Copies of the filing will also be available for inspection and copying at the principal office of the Exchange. All comments received will be posted without change. Persons submitting comments are cautioned that we do not redact or edit personal identifying information from comment submissions. You should submit only information that you wish to make publicly available. All submissions should refer to File No. SR–NYSEAMER–2022–15 and should be submitted on or before July 21, 2022.

V. Accelerated Approval of Proposed Rule Change, as Modified by Amendment No. 2

The Commission finds good cause to approve the proposed rule change, as modified by Amendment No. 2, prior to the thirtieth day after the date of publication of notice of the amended proposal in the **Federal Register**. In Amendment No. 2, the Exchange amended the proposal to: (1) provide additional explanation of and rationale for using Discretionary Pegged Orders; (2) provide additional explanation of the purpose of the proposed rule change; and (3) provide additional explanation regarding how the proposed quote instability coefficients were formulated and tested; and (4) state when the Exchange expects to implement the proposed change to the quote instability coefficients. Amendment No. 2 adds clarity and justification to the proposal and does not substantively alter the proposed rule change as described in the Notice. Accordingly, the Commission finds good cause, pursuant to Section 19(b)(2) of the Act,[14] to approve the proposed rule change, as modified by Amendment No. 2, on an accelerated basis.

VI. Conclusion

It is therefore ordered, pursuant to Section 19(b)(2) of the Act,[15] that the proposed rule change (SR–NYSEAMER–2022–15), as modified by Amendment No. 2, be, and hereby is, approved on an accelerated basis.

For the Commission, by the Division of Trading and Markets, pursuant to delegated authority.[16]

J. Matthew DeLesDernier,

Assistant Secretary.

[FR Doc. 2022–13961 Filed 6–29–22; 8:45 am]

BILLING CODE 8011–01–P

[14] 15 U.S.C. 78s(b)(2).

[15] *Id.*

[16] 17 CFR 200.30–3(a)(12).

SECURITIES AND EXCHANGE COMMISSION

[Release No. 34–95150; File No. SR–NYSEArca–2022–31]

Self-Regulatory Organizations; NYSE Arca, Inc.; Notice of Designation of a Longer Period for Commission Action on a Proposed Rule Change To Amend Rule 6.64P–O

June 24, 2022.

On May 20, 2022, NYSE Arca, Inc. (''NYSE Arca'' or ''Exchange'') filed with the Securities and Exchange Commission (''Commission''), pursuant

to Section 19(b)(1) of the Securities Exchange Act of 1934 (''Act'') [1] and Rule 19b–4 thereunder,[2] a proposed rule change to modify Rule 6.64P–O regarding the automated process for both opening and reopening trading in a series on the Exchange on Pillar. The proposed rule change was published for comment in the **Federal Register** on May 27, 2022.[3]

Section 19(b)(2) of the Act [4] provides that within 45 days of the publication of notice of the filing of a proposed rule change, or within such longer period up to 90 days as the Commission may designate if it finds such longer period to be appropriate and publishes its reasons for so finding, or as to which the self-regulatory organization consents, the Commission shall either approve the proposed rule change, disapprove the proposed rule change, or institute proceedings to determine whether the proposed rule change should be disapproved. The 45th day after publication of the notice for this proposed rule change is July 11, 2022.

The Commission is extending the 45-day time period for Commission action on the proposed rule change. The Commission finds it appropriate to designate a longer period within which to take action on the proposed rule change so that it has sufficient time to consider the proposed rule change. Accordingly, pursuant to Section 19(b)(2) of the Act,[5] the Commission designates August 25, 2022 as the date by which the Commission shall either approve or disapprove, or institute proceedings to determine whether to disapprove, the proposed rule change (File No. SR–NYSEArca–2022–31).

For the Commission, by the Division of Trading and Markets, pursuant to delegated authority.[6]

J. Matthew DeLesDernier,

Assistant Secretary.

[FR Doc. 2022–13959 Filed 6–29–22; 8:45 am]

BILLING CODE 8011–01–P

[1] 15 U.S.C. 78s(b)(1).

[2] 17 CFR 240.19b–4.

[3] *See* Securities Exchange Act Release No. 94959 (May 23, 2022), 87 FR 32203 (May 27, 2022).

[4] 15 U.S.C. 78s(b)(2).

[5] *Id.*

[6] 17 CFR 200.30–3(a)(31).

SECURITIES AND EXCHANGE COMMISSION

[Release No. 34–95151; File No. SR–CBOE–2022–028]

Self-Regulatory Organizations; Cboe Exchange, Inc.; Notice of Filing and Immediate Effectiveness of a Proposed Rule Change To Extend the Temporary Remote Inspection Relief for Trading Permit Holder's Office Inspections for Calendar Years 2020 and 2021 To Include Calendar Year 2022 Through December 31, 2022

June 24, 2022.

Pursuant to Section 19(b)(1) of the Securities Exchange Act of 1934 (the ''Act''),[1] and Rule 19b–4 thereunder,[2] notice is hereby given that on June 9, 2022, Cboe Exchange, Inc. (the ''Exchange'' or ''Cboe Options'') filed with the Securities and Exchange Commission (the ''Commission'') the proposed rule change as described in Items I and II below, which Items have been prepared by the Exchange. The Exchange filed the proposal as a ''non-controversial'' proposed rule change pursuant to Section 19(b)(3)(A)(iii) of the Act [3] and Rule 19b–4(f)(6) thereunder.[4] The Commission is publishing this notice to solicit comments on the proposed rule change from interested persons.

I. Self-Regulatory Organization's Statement of the Terms of Substance of the Proposed Rule Change

Cboe Exchange, Inc. (the ''Exchange'' or ''Cboe Options'') proposes to extend the temporary remote inspection relief for Trading Permit Holder's [sic] office inspections for calendar years 2020 and 2021 to include calendar year 2022 through December 31, 2022. The text of the proposed rule change is provided in Exhibit 5.

The text of the proposed rule change is also available on the Exchange's website (*http://www.cboe.com/AboutCBOE/CBOELegalRegulatoryHome.aspx*), at the Exchange's Office of the Secretary, and at the Commission's Public Reference Room.

II. Self-Regulatory Organization's Statement of the Purpose of, and Statutory Basis for, the Proposed Rule Change

In its filing with the Commission, the Exchange included statements concerning the purpose of and basis for the proposed rule change and discussed any comments it received on the proposed rule change. The text of these statements may be examined at the places specified in Item IV below. The Exchange has prepared summaries, set forth in sections A, B, and C below, of the most significant aspects of such statements.

A. Self-Regulatory Organization's Statement of the Purpose of, and Statutory Basis for, the Proposed Rule Change

1. Purpose

The Exchange proposes to amend Rule 9.2, Supervision of Accounts, to extend the temporary remote inspection relief for Trading Permit Holders (''TPHs'') to complete their branch office inspections for the calendar years 2020 and 2021 to include calendar year 2022 through December 31, 2022.

The COVID–19 pandemic has caused a host of operational disruptions to the securities industry and impacted Trading Permit Holders (''TPHs''), regulators, investors and other stakeholders. In response to the pandemic, the Exchange began providing temporary relief to TPHs from specified Exchange Rules and requirements, including Rule 9.2(d) (Annual Branch Inspections). In November 2020, the Exchange adopted a provision in Rule 8.16(f) (Office Inspections), which has expired by its terms, that extended the time by which TPHs must complete their calendar year 2020 inspection obligations under Rule 8.16(f) to March 31, 2021, without an on-site visit to the office or location.[5] The Exchange also adopted Rule 9.2(d)(5) to provide firms the option of satisfying their inspection obligations under Rule [sic] 8.16(f) and 9.2(d) remotely for calendar years 2020 and 2021, subject to specified conditions,[6] due to the logistical challenges of going on-site while public health and safety concerns related to COVID–19 persisted. In December 2021, due to the ongoing impact of COVID 19, the Exchange extended the temporary remote inspection relief in Rule 9.2(d)(5) for TPH's office inspections for calendar years 2020 and 2021 to include calendar year 2022 through June 30, 2022. The Exchange notes that these temporary rules, currently and as proposed herein, are substantively identical to the temporary inspection extension and remote relief rules filed by the Financial

[1] 15 U.S.C. 78s(b)(1).

[2] 17 CFR 240.19b–4.

[3] 15 U.S.C. 78s(b)(3)(A)(iii).

[4] 17 CFR 240.19b–4(f)(6).

[5] *See* Securities Exchange Act Release No. 90583 (December 7, 2020), 85 FR 80207 (December 12, 2020) (SR–CBOE–2020–112).

[6] *See id.*

Industry Regulatory Authority (''FINRA'').[7]

While there are signs of improvement, much uncertainty remains. The emergence of the COVID 19 variants,[8] dissimilar vaccination rates throughout the United States, and the uptick in transmissions in many locations indicate that COVID–19 remains an active and real public health concern.[9] The Exchange understands that firms have delayed their return to office plans due to the continued pandemic and are considering implementing or have implemented hybrid work arrangements dependent on functions and regulatory requirements.[10] To that end, in order to address ongoing industry-wide concerns regarding having to conduct in-person office inspections while safety concerns related to the pandemic persist and to align with pandemic-related regulatory relief provided by FINRA, which has already extended their substantively identical temporary remote inspection rules,[11] the Exchange proposes to extend Rule 9.2(d)(5) through December 31, 2022. The proposed extension would provide clarity to firms on regulatory requirements and account for the time needed for many firms to carefully assess when and how to have their employees safely return to their offices in light of vaccination coverage in the U.S. and transmission levels of the virus, including any emergent variants throughout the country.

By extending Rule 9.2(d)(5) through December 31, 2022, the Exchange does not propose to amend the other conditions of the temporary rule. The proposed amendments to Rule 9.2(d)(5) simply provide that for calendar year 2022, a TPH has the option to conduct those inspections remotely through December 31, 2022. The current conditions of Rule 9.2(d)(5) for firms that elect to conduct remote inspections would remain unchanged: such firms must amend or supplement their written supervisory procedures for remote inspections, use remote inspections as part of an effective supervisory system, and maintain the required documentation. The additional period of time would also enable the Exchange to further monitor the effectiveness of remote inspections and their impacts—positive or negative—on firms' overall supervisory systems in the evolving workplace. Notwithstanding the proposed temporary rule change, a TPH remains subject to the requirements of Rule 8.16(f) and Rule 9.2(d).

The Exchange continues to believe this temporary remote inspection option is a reasonable alternative to provide to firms to fulfill their Rule 8.16(f) and 9.2(d) obligations during the pandemic and is designed to achieve the investor protection objectives of the inspection requirements under these unique circumstances. Firms should consider whether, under their particular operating conditions, reliance on remote inspections would be reasonable under the circumstances. For example, firms with offices that are open to the public or that are otherwise doing business as usual should consider whether some form of in-person inspections would be feasible and appropriately contribute to a supervisory system that is reasonably designed to achieve compliance with applicable securities laws and regulations, and with applicable Exchange Rules.

The Exchange again notes that FINRA has already put in place the same extension period of their remote relief rule,[12] which is substantively identical to Rule 9.2(d)(5).[13]

2. Statutory Basis

The Exchange believes the proposed rule change is consistent with the Securities Exchange Act of 1934 (the ''Act'') and the rules and regulations thereunder applicable to the Exchange and, in particular, the requirements of Section 6(b) of the Act.[14] Specifically, the Exchange believes the proposed rule change is consistent with the Section 6(b)(5)[15] requirements that the rules of an exchange be designed to prevent fraudulent and manipulative acts and practices, to promote just and equitable principles of trade, to foster cooperation and coordination with persons engaged in regulating, clearing, settling, processing information with respect to, and facilitating transactions in securities, to remove impediments to and perfect the mechanism of a free and open market and a national market system, and, in general, to protect investors and the public interest. Additionally, the Exchange believes the proposed rule change is consistent with the Section 6(b)(5)[16] requirement that the rules of an exchange not be designed to permit unfair discrimination between customers, issuers, brokers, or dealers.

In particular, the Exchange believes that, in recognition of the ongoing impact of COVID–19 on performing the on-site inspection component of Rules 8.16(f) and 9.2(d), the proposed rule change is intended to provide firms a temporary regulatory option to conduct inspections of offices and locations remotely during calendar year 2022. This temporary remote relief rule and the proposed extension thereof does not relieve firms from meeting the core regulatory obligation to establish and maintain a system to supervise the activities of each associated person that is reasonably designed to achieve compliance with applicable securities laws and regulations, and with applicable Exchange Rules that directly serve investor protection. In a time when faced with ongoing challenges resulting from the COVID–19 pandemic, the Exchange believes that the proposed rule change provides sensibly tailored relief that will afford firms the ability to assess when and how to implement their work re-entry plans as measured against the health and safety of their personnel, while continuing to serve and promote the protection of investors and the public interest.

[7] *See* Securities and Exchange Act Release Nos. 89188 (June 30, 2020), 85 FR 40713 (July 7, 2020) (SR–FINRA–2020–019); 90454 (November 18, 2020), 85 FR 75097 (November 24, 2020) (Notice of Filing and Immediate Effectiveness of File No. SR–FINRA–2020–040); 93002 (September 15, 2021), 86 FR 52508 (September 21, 2021) (File No. SR–FINRA–2021–023); *and* 94018 (January 20, 2022), 87 FR 4072 (January 26, 2022) (SR–FINRA–2022–001).

[8] *See* The Centers for Disease Control and Prevention (''CDC''), What You Need to Know about Variants (stating, in part, that ''the Delta variant causes more infections and spreads faster than earlier forms of the virus that causes COVID19.''), *https://www.cdc.gov/coronavirus/2019-ncov/variants/variant.html* (updated April 26, 2022). See *also* CDC, The Possibility of COVID–19 Illness after Vaccination: Breakthrough Infections (stating, in part, that ''COVID–19 vaccines are effective at preventing infection, serious illness, and death. Most people who get COVID–19 are unvaccinated. However, since vaccines are not 100% effective at preventing infection, some people who are fully vaccinated will still get COVID–19 . . . People who get vaccine breakthrough infections can be contagious.''), *https://www.cdc.gov/coronavirus/2019-ncov/vaccines/effectiveness/why-measure-effectiveness/breakthrough-cases.html* (updated December 17, 2022).

[9] *See e.g.,* Press Briefing by White House COVID–19 Response Team and Public Health Officials (May 18, 2022), which discusses the sustained high number of infections driven by ''incredibly contagious subvariants'' and the limited funding in being able to provide a new generation of vaccines to every American in the fall/winter of 2022; *and see generally CDC,* Unpacking Variants (updated April 22, 2022).

[10] The Exchange notes that a majority of its TPHs are FINRA member firms as well, and that through FINRA's ongoing monitoring the Exchange has learned that many of its TPHs have delayed plans to require a full return to the office and that most continue to operate in a remote or hybrid environment.

[11] *See* Release No. 94018 (January 20, 2022), 87 FR 4072 (January 26, 2022) (File No. SR–FINRA–2022–001).

[12] *See supra* note 11.

[13] *See supra* notes 5 and 7.

[14] 15 U.S.C. 78f(b).

[15] 15 U.S.C. 78f(b)(5).

[16] *Id.*

B. Self-Regulatory Organization's Statement on Burden on Competition

The Exchange does not believe that the proposed rule change will impose any burden on competition that is not necessary or appropriate in furtherance of the purposes of the Act. The Exchange does not believe the proposed temporary rule changes will impose any burden on intramarket competition that is not necessary or appropriate in furtherance of the Act, because the proposed extension of the temporary remote inspection relief rule will apply equally to all TPHs required to conduct office and location inspections in calendar year 2022 through December 31, 2022. The Exchange further does not believe that the proposed extension to the temporary rule will impose any burden on intermarket competition because it relates only to the extension of the remote manner in which inspections for 2022 may be conducted. Additionally, and as stated above, FINRA has already extended its substantively identical temporary remote relief rule for its members in the same manner.

C. Self-Regulatory Organization's Statement on Comments on the Proposed Rule Change Received From Members, Participants, or Others

The Exchange neither solicited nor received comments on the proposed rule change.

III. Date of Effectiveness of the Proposed Rule Change and Timing for Commission Action

Because the foregoing proposed rule change does not: (i) significantly affect the protection of investors or the public interest; (ii) impose any significant burden on competition; and (iii) become operative for 30 days from the date on which it was filed, or such shorter time as the Commission may designate, it has become effective pursuant to Section 19(b)(3)(A) of the Act [17] and Rule 19b–4(f)(6) [18] thereunder.

A proposed rule change filed under Rule 19b–4(f)(6) normally does not become operative for 30 days after the date of filing. However, pursuant to Rule 19b–4(f)(6)(iii), the Commission may designate a shorter time if such action is consistent with the protection of investors and the public interest. The Exchange has asked the Commission to waive the 30-day operative delay so that the proposed rule change may become operative immediately upon filing.

The Exchange stated that despite signs of improvement, the emergence of the COVID–19 variants, dissimilar vaccination rates throughout the United States, and the uptick in transmissions in many locations indicate that COVID–19 remains an active and real public health concern. The Exchange also stated that extending the relief provided originally in SR–CBOE–2020–112 [19] and SR–CBOE–2021–070 [20] would continue to provide clarity to firms on regulatory requirements and account for the time needed for many firms to carefully assess when and how to have their employees safely return to their offices.

The proposed rule change would provide firms the option of satisfying their inspection obligations under Rule 8.16(f) and Rule 9.2(d) remotely for calendar year 2022 through December 31, 2022, subject to specified conditions. These rules and the proposed extension thereof do not relieve firms from meeting their core regulatory obligation to establish and maintain a system to supervise the activities of each associated person that is reasonably designed to achieve compliance with applicable securities laws and regulations, and with applicable Exchange rules. Further, like SR–CBOE–2020–112 and SR–FINRA–2021–070, the proposed rule change provides only temporary relief during a period in which firms' operations are impacted by COVID–19. As proposed, the changes would be in place through December 31, 2022. Importantly, extending the relief provided in the proposed rule change immediately upon filing and without a 30-day operative delay will allow firms to continue to complete their inspections in an orderly manner. For these reasons, waiver of the 30-day operative delay for the proposed rule change is consistent with the protection of investors and the public interest. Accordingly, the Commission hereby waives the 30-day operative delay and designates the proposed rule change operative upon filing.[21]

At any time within 60 days of the filing of the proposed rule change, the Commission summarily may temporarily suspend such rule change if it appears to the Commission that such action is necessary or appropriate in the public interest, for the protection of investors, or otherwise in furtherance of the purposes of the Act. If the Commission takes such action, the Commission will institute proceedings to determine whether the proposed rule change should be approved or disapproved.

IV. Solicitation of Comments

Interested persons are invited to submit written data, views, and arguments concerning the foregoing, including whether the proposed rule change is consistent with the Act. Comments may be submitted by any of the following methods:

Electronic Comments

- Use the Commission's internet comment form (*http://www.sec.gov/rules/sro.shtml*); or
- Send an email to *rule-comments@sec.gov.* Please include File Number SR–CBOE–2022–028 on the subject line.

Paper Comments

- Send paper comments in triplicate to Secretary, Securities and Exchange Commission, 100 F Street NE, Washington, DC 20549–1090.

All submissions should refer to File Number SR–CBOE–2022–028. This file number should be included on the subject line if email is used. To help the Commission process and review your comments more efficiently, please use only one method. The Commission will post all comments on the Commission's internet website (*http://www.sec.gov/rules/sro.shtml*). Copies of the submission, all subsequent amendments, all written statements with respect to the proposed rule change that are filed with the Commission, and all written communications relating to the proposed rule change between the Commission and any person, other than those that may be withheld from the public in accordance with the provisions of 5 U.S.C. 552, will be available for website viewing and printing in the Commission's Public Reference Room, 100 F Street NE, Washington, DC 20549 on official business days between the hours of 10:00 a.m. and 3:00 p.m. Copies of the filing also will be available for inspection and copying at the principal office of the Exchange. All comments received will be posted without change. Persons submitting comments are cautioned that we do not redact or edit personal identifying information from comment submissions. You should submit only information that you wish to make available publicly.

All submissions should refer to File Number SR–CBOE–2022–028 and should be submitted on or before July 21, 2022.

[17] 15 U.S.C. 78s(b)(3)(A).

[18] 17 CFR 240.19b–4(f)(6).

[19] *See supra* note 5.

[20] *See* Securities Exchange Act Release No. 93721 (December 6, 2021), 86 FR 70560 (December 10, 2021) (SR–CBOE–2020–070).

[21] For purposes only of waiving the 30-day operative delay, the Commission has considered the proposed rule change's impact on efficiency, competition, and capital formation. *See* 15 U.S.C. 78c(f).

For the Commission, by the Division of Trading and Markets, pursuant to delegated authority.[22]

J. Matthew DeLesDernier,

Assistant Secretary.

[FR Doc. 2022–13960 Filed 6–29–22; 8:45 am]

BILLING CODE 8011–01–P

SECURITIES AND EXCHANGE COMMISSION

[Release No. 34–95155; File No. SR–CBOE–2022–029]

Self-Regulatory Organizations; Cboe Exchange, Inc.; Notice of Filing and Immediate Effectiveness of a Proposed Rule Change To Amend Its Facility Fees Section in the Fees Schedule in Connection With the Exchange's New Trading Floor

June 24, 2022.

Pursuant to Section 19(b)(1)[1] of the Securities Exchange Act of 1934 (the ''Act''),[2] and Rule 19b–4 thereunder,[3] notice is hereby given that on June 10, 2022, Cboe Exchange, Inc. (the ''Exchange'' or ''Cboe Options'') filed with the Securities and Exchange Commission (the ''Commission'') the proposed rule change as described in Items I and II below, which Items have been prepared by Exchange. The Commission is publishing this notice to solicit comments on the proposed rule change from interested persons.

I. Self-Regulatory Organization's Statement of the Terms of Substance of the Proposed Rule Change

Cboe Exchange, Inc. (the ''Exchange'' or ''Cboe Options'') proposes to amend its Facility Fees section in the Fees Schedule in connection with the Exchange's new trading floor. The text of the proposed rule change is provided in Exhibit 5.

The text of the proposed rule change is also available on the Exchange's website (*http://www.cboe.com/AboutCBOE/CBOELegalRegulatoryHome.aspx*), at the Exchange's Office of the Secretary, and at the Commission's Public Reference Room.

II. Self-Regulatory Organization's Statement of the Purpose of, and Statutory Basis for, the Proposed Rule Change

In its filing with the Commission, the Exchange included statements concerning the purpose of and basis for the proposed rule change and discussed any comments it received on the proposed rule change. The text of these statements may be examined at the places specified in Item IV below. The Exchange has prepared summaries, set forth in sections A, B, and C below, of the most significant aspects of such statements.

A. Self-Regulatory Organization's Statement of the Purpose of, and Statutory Basis for, the Proposed Rule Change

1. Purpose

The Exchange proposes to amend its Fees Schedule in connection with the opening of a new trading floor. Currently, the Exchange conducts open outcry trading at 400 S. LaSalle, Chicago, Illinois. On or about June 6, 2022, the Exchange intends to move its open outcry trading operations to a new trading floor located at 141 W Jackson Blvd., Chicago, Illinois. As a result of this transition, certain infrastructure and technology on the current trading floor will be rendered obsolete and the new trading floor will have new infrastructure and offer new technology. Accordingly, the Exchange proposes to adopt new, and/or update current, facility fees with respect to the new trading floor, as well as eliminate obsolete facility fees that are only applicable to the Exchange's current facility and trading floor which will no longer be in use as of June 6, 2022.[4]

Booth Fees

The Exchange currently assesses monthly fees for ''standard Booths'', which refers to a portion of designated space on the trading floor of the Exchange adjacent to or in particular trading crowds, which may be occupied by a Trading Permit Holder (''TPH''), clerks, runners, or other support staff for operational and other business-related activities. The Exchange assesses a monthly fee of $195 for standard Booths located along the perimeter of the trading floor, and $550 for standard Booths located in the OEX, Dow Jones, MNX and VIX trading crowds. The Exchange also assesses monthly fees for ''nonstandard Booths'', which refers to space on the trading floor of the Exchange that is set off from a trading crowd, which may be rented by a TPH for whatever support, office, back-office, or any other business-related activities for which the TPH may choose to use the space. A TPH that rents non-standard booth space on the floor of the Exchange is subject to a base non-standard booth rental fee of $1,250 per month in addition to a square footage fee of $1.70 per square foot per month based on the size of the TPH's non-standard booth. The Exchange proposes to modify and simplify its fees assessed for booth rentals. First, the Exchange proposes to eliminate the distinction between standard and non-standard Booths. The Exchange also proposes to adopt a tiered pricing schedule for Booths based on the number of Booths rented by a TPH. Particularly, the Exchange proposes to adopt the following fees for Booths that are set off from a trading crowd:

Quantity of booths	Monthly fee
1–2	$400
3–6	$300
7–10	$200
11 or more	$100

The proposed tiered pricing provides discounted pricing for additional Booths. For example, if a TPH rented 4 Booths, the TPH would be assessed $1,400 a month (2 Booths at $400 and 2 Booths at $300). The Exchange also proposes to adopt a monthly fee of $750 per booth for any booth located in a trading crowd. The Booth Pass-Through Fee would remain unchanged.[5] The Exchange notes that use of Booths, whether or located away from or in a trading crowd are optional and not necessary in order to conduct open outcry trading on the trading floor. Booth spaces are also uniform and nearly identical in size. The Exchange also notes that at this time, the Exchange has ample space on its new trading floor for booth space.

Policy

The Exchange also proposes to update the Exchange's policy (''Policy'') regarding the rental and use of booth space on its trading floor by TPH organizations. The Exchange memorialized the Policy and filed it with the Commission in 1994.[6] The Exchange proposes to update the Policy in a few respects. First, the Exchange proposes to change references to ''Chicago Board Options Exchange, Incorporated'' and ''CBOE'' to ''Cboe

[22] 17 CFR 200.30–3(a)(12).

[1] 15 U.S.C. 78s(b)(1).

[2] 15 U.S.C. 78a.

[3] 17 CFR 240.19b–4.

[4] The Exchange initially filed the proposed fee changes on June 1, 2022 (SR–CBOE–2022–026). On June 10, 2022, the Exchange withdrew that filing and submitted this filing.

[5] Pursuant to the Booth Pass-Through Fee, TPHs bear responsibility for all costs associated with any modifications and alterations to any trading floor Booths leased by the TPH (or TPH organization) and must reimburse the Exchange for all costs incurred in connection therewith.

[6] *See* Securities Exchange Act Release No. 33972 (April 28, 1994), 59 FR 23242 (May 5, 1994).

Exchange, Inc.,'' and ''Cboe Options'', respectively to reflect the Exchange's current legal name which has been updated since the last update to the Policy. The Exchange also proposes to update the rule reference relating to the Appeals process from Chapter ''19'' to Chapter ''15'' to reflect recent updates to the Exchange's rulebook.

The Exchange notes the Policy includes a section that sets forth the requirement that all TPH organizations renting Booths execute a ''Trading Floor Booth Rental Agreement'' (hereinafter, ''Agreement'') which sets forth the contractual terms, conditions and restrictions governing rental and use of Booths by TPH organizations.[7] A copy of the Agreement was included in the Exchange's 1994 rule filing noted above for the Commission's information.[8] The Agreement specifically sets forth the details of the parties' contractual relationship regarding rental and use of the Booths. Among other provisions, the Agreement includes specific provisions delineating the termination rights of both the TPH organization and the Exchange and sets forth a procedure for adding Booths to and deleting Booths from the Agreement. The Agreement also spells out requirements respecting the TPH's use of the Booths, such as those governing the installation of equipment, the conduct of business, and access of persons to the Booths.

The Exchange has updated the Agreement (which is now referred to as the Agreement for ''standard Booths''). In 2012, the Exchange also created a separate form of the Agreement for non-standard Booths.[9] In connection with the proposal to eliminate non-standard Booths, the Exchange proposes to eliminate use of that agreement. A copy of the standard form of Agreement is included with this filing in Exhibit 3. The Exchange proposes to update this section of the Policy to eliminate references to the non-standard booth agreement. The Exchange also proposes to update the Agreement to (i) change references to ''Chicago Board Options Exchange, Incorporated'' and ''CBOE'' to ''Cboe Exchange, Inc.,'' and ''Cboe Options'', respectively; (ii) update the link to where the Cboe Options Fees Schedule can be found; (iii) eliminate the requirement for Cboe to provide TPH organizations with a copy of TPH Organization's current booth assignments, as it no longer believes such record is necessary or desired by TPHs; and (iv) eliminate Section 13, which prohibits TPH Organizations leasing SPX arbitrage Booths from installing data equipment in such Booths, as the Exchange does not intend to provide such Booths and to the extent it determines to do so in the future does not anticipate maintaining such prohibition. The Exchange will disseminate the updated Policy and forms of the Agreement to Trading Permit Holders by posting them on the Trading Permit Holder portion of the Cboe website.

Line to Cboe Floor Network

On the current trading floor, TPHs use various lines and telecommunications (''telco'') circuits to connect to the trading floor. Independent wiring must be used for each line or telco circuit, which means firms may need to relocate their lines or telco circuits if they move into, or relocate to, a new trading space or Booth. These telco circuits are also on a per device basis. The new trading floor will utilize a single floor network (*i.e.,* ''Cboe Floor Network'') for TPHs' devices consisting of both wired jacks and wireless network access located at kiosks, in trading pits, and in Booths throughout the new trading floor. As such, unlike the current trading floor infrastructure, TPHs will not need to order lines from the Exchange to specific locations on the floor. Rather, a TPH only needs to order one Ethernet port (''Line'') (or a pair for redundancy) to connect to the Cboe Floor Network and will be able to connect their devices to the Exchange's network anywhere on the trading floor through wired jack ports or the wireless network. Additionally, firms will no longer need to provide network equipment to support dedicated lines to the floor, as on the new trading floor the Exchange will be providing the network switches and local area network (LAN) lines for all firms.

The Exchange believes the new trading floor will provide TPHs more flexibility to move and relocate as needed, as compared to the current trading floor. If a TPH wishes to relocate trading spaces or trading booths on the current trading floor, it could trigger installation, relocation and removal of various lines and circuits, which subsequently triggers various installation, relocation and removal fees.[10] For example, on the current trading floor, if a Market-Maker were to move to a new trading space, it may need relocate the lines or circuits from its current space to the new space and would be subject to relocation fees such as $129 relocation fee to relocate any Exchangefones and $200 relocation fee for relocation of any Market-Maker Handheld Terminal.[11] As another example, if a TPH were to relocate to a new Booth, they may be subject to relocation fees of $625 for relocating lines from the trading floor to local carriers or the Communications Center.[12] Since all network access will be wireless or plug and play at any location on the new trading floor, the new infrastructure eliminates the need for installation of multiple lines, as well as relocation and removal of connectivity lines to devices and also renders the following Lines fees (including fees relating to installation, relocation and removal) obsolete: Intra-Floor, Voice Circuits, Appearances, Data Circuits at Local Carrier, and Data Circuits at In-House Frame. The Exchange therefore proposes to instead adopt a monthly fee of $350 per Line and notes it does not expect TPHs to purchase more than one Line and one redundant Line. The Exchange also proposes to adopt a one-time $500 installation fee for the installation of the line to the Cboe Floor Network. The proposed $500 installation fee would include installation of a redundant line at no additional cost and allows the Exchange to recoup the costs it incurs from third-party vendors for the installation of the Lines.

Co-Location and Meet-Me-Room

For a monthly fee, the Exchange currently provides TPHs (and third-party vendors, collectively ''firms'') with cabinet space in its building for placement of network and server hardware. Particularly, TPHs are charged a monthly fee of $50 per ''U'' of shelf space [13] and Sponsored Users [14] are assessed a monthly fee of $100 per ''U''. Fees are charged in increments of 4 ''U'' (*i.e.,* a minimum of $200 per 4 ''U'' is charged or, for Sponsored Users, a minimum of $400 per 4 ''U'' is charged). A firm also receives power, cooling, security and assistance with installation and connection of the

[7] The Agreement is non-negotiable and its terms are the same for every TPH organization.

[8] *See* Securities Exchange Act Release No. 33972 (April 28, 1994), 59 FR 23242 (May 5, 1994).

[9] *See* Securities Exchange Act Release No. 66727 (April 9, 2012), 77 FR 21134 (April 3, 2012) (SR–CBOE–2012–025).

[10] *See* Cboe Options Fees Schedule, Lines Table.

[11] *See* Cboe Options Fees Schedule, Communications Table, Exchangefone and Miscellaneous Table, Market-Maker Handheld Terminal Tethering Services.

[12] *See* Cboe Options Fees Schedule, Lines Table, Lines Direct from Local Carrier to Trading Floor and Lines Between Communication Center and Trading Floor.

[13] The term ''U'' is used to indicate an equipment unit 1.75'' high with a maximum power of 125 watts per U space. Per the Fees Schedule, Co-Location fees are charged in increments of 4 ''U'' (7 inches).

[14] *See* Cboe Options Rule 3.60.

equipment to the Exchange's servers, at no additional charge.

The Exchange will continue to provide firms cabinet space in the new facility (''Meet-me-Room'') for placement of network and server hardware at the same rate of $50 per ''U'', billed in increments of 4 ''U''. The Exchange proposes however to eliminate the separate rate for Co-Location of Equipment Fee for Sponsored Users, as the Exchange does not currently have any Sponsored Users, nor has it had any Sponsored users in several years. As such, the Exchange no longer believes its necessary to maintain a separate rate for Sponsored Users.[15] The Exchange also proposes to relocate the ''Co-Location'' section in the Fees Schedule to immediately follow the ''Lines'' section in the Fees Schedule, as it believes such fees are more appropriately grouped together and will make the Fees Schedule easier to read and follow. The Exchange also believes it will make the Fees Schedule easier to read and follow if it reflects the rate of the minimum increment charged, instead of a broken-out rate that can never be assessed. As noted above, the Fees Schedule currently sets forth the monthly rate per ''U'' (*i.e.,* ''$50 per ''U''), even though it states it only charges in increments of 4 ''U'' (*i.e.,* fee is really $200 per 4 ''U''). The Exchange will continue to charge in increments of 4 ''U'' in the new facility and therefore proposes to update the fee language in the relocated line item to reflect the rate for the minimum increment of 4 ''U''. Despite this language change, the Exchange reiterates it is not changing the amount assessed for the Co-Location of Equipment Fee. Within the new Meet-me-Room however, the Exchange is proposing to limit firms to 8 ''U'' in order to ensure all firms can be accommodated in the Meet-me-Room.

The Exchange next proposes to adopt monthly and installation fees for cross connects, including telecommunication (*i.e.,* telco) and Cboe Floor Network cross connects,[16] within the Meet-Me-Room. Particularly, each cross connect will be subject to a $25 per month per cross connect fee. Additionally, firms will be subject to a one-time $500 installation fee for each cross connection. The Exchange notes that currently it assesses third-party vendors a $50 per month fee for ''Data Circuits from Local Carrier to Equipment Shelf'' which offers similar cross-connectivity from Local Carriers (telco providers) to a firm's equipment shelf in the current meet-me-room. The Exchange no longer will use data circuits from Local Carriers to equipment on the shelf and proposes to therefore eliminate this fee (currently under the Vendor Services section) from the Fee Schedule.

The Exchange next proposes to adopt a fee relating to accessing the Meet-me-Room. Particularly, in order for a firm to access the Meet-me-Room (*e.g.,* if they need technical support), they must request access. The Exchange notes that because the Meet-me-Room now resides in a facility not owned by the Exchange, the Exchange is assessed a fee by a third-party for providing firms access to the Meet-me-Room. The Exchange therefore proposes to adopt a fee to recoup fees it is billed for providing this access (''Cboe Datacenter Services''). Specifically, the Exchange proposes to assess a fee of $100 per half-hour (with a 1 hour minimum required). The Exchange also proposes to waive this fee for the month of June 2022. Particularly, the Exchange understands that firms may have a greater need during the first month of operations on the new trading floor to visit the Meet-me-Room. The proposed waiver therefore allows firms to respond to any potential issues that may arise in the Meet-me-Room during the first month at no additional cost. The Exchange anticipates that firm requests for this type of access will be infrequent thereafter. The Exchange also notes that it similarly assesses fees for various third-party technical support or vendor services on the current trading floor.[17] However, these services will no longer be available in the new facility and the Exchange therefore proposes to eliminate the following corresponding fees: Technical Support Outside Normal Hours, IPC (vendor) Time & Material, IPC (vendor) Time & Material Overtime, After Hours Technician Service, Market-Maker Handheld Tethering Services, and Market-Maker Handheld Tethering Services For Indexes.

Trading Floor Device Fees

The Exchange currently lists various fees under the Trading Floor Terminal Rentals section of the Facility Fees table.[18] For example, TPHs are currently assessed $125 per month for ''PAR Workstations'' to help offset hardware costs incurred by the Exchange in making PAR workstations available to TPHs. A PAR (Public Automated Routing System) Workstation is an Exchange-provided order management tool for use on the Exchange's trading floor by TPHs and PAR Officials to manually handle orders pursuant to the Rules and facilitate open outcry trading. Access to PAR is only available on Exchange-provided tablets (currently Surface Tablets) and the current monthly fee covers both the Exchange-provided tablet and PAR access. In connection with the transition to the new trading floor, the Exchange proposes to modify the way it assesses fees for use of PAR[19] and also adopt fees for non-Exchange provided tablets that connect to the Exchange's network. Particularly, the Exchange proposes to adopt a separate monthly Exchange Tablet fee of $140 for any tablet provided by the Exchange and a separate monthly fee of $45 to access PAR. TPHs will continue to utilize PAR on the new trading floor, which will continue to only be available on Exchange-provided tablets. Exchange tablets used for PAR may also be used for access to Silexx.[20]

The Exchange also proposes to adopt a separate Exchange Tablet fee as TPHs will have the option of using Exchange-provided tablets for Cloud9, which is the new telecommunication system that will be offered by the Exchange on the new trading floor.[21] The Exchange notes that TPHs have the option of using their own tablet to access Cloud9 in lieu of using an Exchange-provided tablet. Such tablets would be subject to the

[15] To the extent the Exchange has Sponsored Users in the future, such participants will be assessed the same rate as all other firms (*i.e.,* $50 per ''U'', billed in minimum increments of 4 ''U'').

[16] The Exchange offers fiber cross connect. The cross connects may run between a firm's hardware to a third-party telecommunications service or the Cboe Floor Network switches that will service the trading floor.

[17] *See* Cboe Options Fees Schedule, Vendor Services, Technical Support Outside Normal Hours, and Miscellaneous, IPC (vendor) Time & Material, IPC (vendor) Time & Material Overtime, After Hours Technician Service, Market-Maker Handheld Tethering Services, and Market-Maker Handheld Tethering Services For Indexes.

[18] The Exchange proposes to rename this section ''Trading Floor Device Fees''.

[19] The Exchange proposes to replace the reference to ''PAR Workstation'' to ''PAR Access''. Particularly, the current version of PAR is no longer a physical touch screen terminal (*i.e.,* workstation) but an order management tool that can be accessed on a tablet such as a Surface.

[20] Silexx is a User-optional order entry and management trading platform. The Silexx platform consists of a ''front-end'' order entry and management trading platform (also referred to as the ''Silexx terminal'') for listed stocks and options that supports both simple and complex orders, and a ''back-end'' platform which provides a connection to the infrastructure network. The Silexx front-end and back-end platforms are a software application that is installed locally on a user's laptop.

[21] Cloud9 is the voice communication solution for the new trading floor. Cloud9 is a VoIP cloud-based service offering a traditional turret, the Cloud Hub. The Cloud Hub will be provided by Cboe and will need to connect to a laptop or device provided either by the TPH or by Cboe. TPHs may not use the same Exchange Tablet for both PAR and Cloud9.

''TPH-Owned Device Authentication Fee'' described more fully below.

On the new trading floor TPHs will be able to use a variety of devices such as tablets, laptops, Market-Maker handheld devices, printers, and phone systems. TPHs will be able to connect these devices to the Exchange's network anywhere on the trading floor through wired jack ports or the wireless network on the trading floor, as long as they are onboarded to the Cboe Network Authentication System. The Exchange proposes to assess a fee for TPH-owned devices that connect to the Exchange's network on the new trading floor (''TPH-Owned Device Authentication Fee''). Particularly, the Exchange proposes to assess a fee of $100 per authenticated connection (*i.e.,* when a device connects to the wired jack and/or wireless network on the trading floor).[22] The proposed fee will be based on the maximum number of concurrent authenticated connections made during market hours during the calendar month. As discussed above, the Exchange believes the new trading floor provides TPHs more flexibility to move and relocate any of their devices by eliminating the need for installation, relocation and removal of connectivity lines to devices. Consequently, corresponding monthly, installation, relocation and removal fees will also be eliminated on the new trading floor.

Replacement Fees

The Exchange currently assesses fees related for certain hardware that needs to be replaced because of loss or because of non-normal wear and tear. Particularly, the Exchange assesses the following replacement fees:

Replacement Tablet	$1,300 each.
Replacement Stylus Pen.	$100 each.
Replacement Chargers.	$75 each.
Replacement Adapters and Protective Cases.	$50 each

The Exchange proposes to maintain these replacement fees on the new trading floor. However, the Exchange proposes to increase the fee to replace a table from $1,300 per tablet to $1,400 per tablet to reflect increased costs to the Exchange. The Exchange also proposes to adopt a new replacement fee for lost Access Badges at the rate of $100 per badge in order to encourage TPHs to hold onto their badges and not misplace them.

Obsolete Fees

The Exchange next proposes to eliminate fees assessed for technology and infrastructure and related services that will be rendered obsolete upon the transition to the new trading floor. Particularly, the Exchange proposes to eliminate the following fees that have not otherwise been discussed above:

Description	Fee
Arbitrage Phone Positions	$550/month.
HP Laser Printer Paper	$5.00 per packet of 500 sheets.
Zebra Printer Papers	$19.50 per roll.
Zebra Printer Ink	$19.50 per roll.
Forms Storage	$11.
Exchangefone	$935/installation; $129/relocation; $100/removal.
Exchangefone—Maintenance	$57/month.
Exchangefone—With Recorded Coupler Between Booths	$126/relocation.
Exchangefone—Within Booth	$25/relocation.
Single Line—Maintenance	$11.50/month
Phone Rentals—Monthly Fee	$110/month.
Phone Rentals—Replacement Repairs	cost.
Lines—Intra Floor	$57.75/per month.
Lines—Voice Circuits	$16/month; $52.50/installation; $36.75/removal.
New Circuits—First	$120/installation; $50/removal.
New Circuits—@Additional	$18/installation; $18/removal.
Existing Line Appearance—First	$50/installation; $25/removal.
Existing Line Appearance—A Additional	$18/installation: $18/removal.
Data Circuits (DC) at Local Carrier (entrance)	$16/month; $52.50/installation; $36.75 removal.
DC @In-House Frame—Lines between Local Carrier and Comms Center	$12.75/month; $550/installation.
DC @In-House Frame- Lines Between Comms Center and Trading Floor	$12.75/month; $725/installation; $625/relocation.
DC @In-House Frame—Lines Direct from Local Carrier to Trading Floor	$12.75/month; $725/installation; $625/relocation
Shelf for Equipment	$100/month.
Lines from Equipment to Floor	$50/month.
Handsets	$79/installation.
Headset Jack	$131/installation; $58 relocation; $28/removal.
Recorder Coupler	$150 new/$50 existing installation; $25/relocation; $25/removal.
Thomson/Other (Basic Service)	$425/month.
Satellite TV	$50/month.
Cboe Options Trading Floor Terminal	$250/month; $175/installation; $225 relocation; $125/removal.
Trading Floor Printer Maintenance[23]	$75/month.

The Exchange also proposes to eliminate all PULSe Workstation fees as PULSe was decommissioned in January 2021, but the Exchange inadvertently did not delete references to PULSe-related fees at that time.

Temporary Fees

In June 2020, the Exchange adopted Footnote 24 of the Fees Schedule to govern pricing changes that would apply for the duration of time the Exchange trading floor was being operated in a modified manner in connection with the COVID–19 pandemic. By way of background, the Exchange closed its trading floor on March 16, 2020 due to the COVID–19

[22] For example, a TPH that connects to Cloud9 using its own laptop would be assessed $100 per month for that connection. If that same TPH chooses to connect an additional laptop and a printer to the network, that TPH will be assessed a total of $300 per month (*i.e.,* $100 for each of the tablet used for Cloud9, the laptop and the printer).

[23] The Exchange proposes to eliminate a corresponding reference in Footnote [sic] 40 to Trading Floor Printer Maintenance in light of the proposal to eliminate this fee.

pandemic and reopened its trading floor on June 15, 2020, but with a modified configuration of trading crowds in order to implement social distancing and other measures consistent with local and state health and safety guidelines to help protect the safety and welfare of individuals accessing the trading floor. As a result, the Exchange relocated and modified the physical area of certain trading crowds and also determined and reduced how many floor participants may access the trading floor. In connection with these changes, the Exchange proposed a number of modified billing changes that would remain in place for the duration of the time the Exchange operated in a modified manner. Particularly, the following fees are modified when the Exchange is operating in a modified state due to the COVID–19 pandemic:

Trading Permits	Floor trading permit fees are not be assessed on the total number of floor trading permits a TPH organization holds, and instead are based on the floor trading permits used by nominees of the TPH each day during the month using the following formula: (i) the number of floor trading permits that have a nominee assigned to it in the Customer Web Portal system (''Portal'') in a given month, multiplied by the number of trading days that the floor is open and that a nominee is assigned to each respective trading permit in that month, divided by (ii) the total number of trading days in a month. The Exchange rounds up to determine the total number of trading permits assessed the fees set forth in the Floor Trading Permit Sliding Scales.
SPX Tier Appointment Fee	The monthly fee for the SPX/SPXW Floor Market-Maker Tier Appointment Fee will be increased to $5,000 per Trading Permit from $3,000 per Trading Permit.
Inactive Nominee Status (Parking Space)	$300 Parking Space Fees is not applied.
Inactive Nominee Status Change (Trading Permit Swap)	$100 Trading Permit Swap Fee is not applied.
SPX/SPXW and SPESG Floor Brokerage Fees	SPX/SPXW and SPESG Floor Brokerage Fees are be assessed the rate of $0.05 per contract for non-crossed orders and $0.03 per contract for crossed order instead of $0.04 and $0.02, respectively.
Facility Fees	Monthly fees are waived for the following facilities fees: arbitrage phone positions and satellite tv. If a TPH is unable to utilize designated facility services while the trading floor is operating in a modified state, corresponding fees, including for standard and non-standard booth rentals, Exchangefone maintenance, single line maintenance, intra floor lines, voice circuits, data circuits at local carrier (entrance), and data circuits at in-house frame, are waived.

The Exchange notes that while the current floor still utilizes social distancing and reconfigured trading crowds (and therefore is considered to be operating in a modified manner), it does not believe it to be necessary to implement such safety measures on the new trading floor at the time of transition given recent developments relating to the COVID–19 pandemic. As such, upon moving to the new trading floor on June 6, 2022, the Exchange will no longer be operating in a modified manner and Footnote 24 would not apply. The Exchange notes that absent a proposed rule change however, the Exchange would have to apply certain billing modifications under Footnote 24 for the first three business days of the calendar month. The Exchange therefore proposes to provide in Footnote 24 that it will not apply between June 1, 2022 through June 3, 2022 in order to provide seamless billing in the month of June 2022. Accordingly, effective June 1, 2022: (1) Floor Trading Permit fees will be assessed based on the total number of floor trading permits a TPH holds each month; (2) Parking Space and Trading Swap fees will no longer be waived; and (3) SPX/SPXW and SPESG Floor Brokerage fees will be assessed $0.04 per contract for non-crossed orders (instead of $0.05 per contract) and $0.02 per contract for crossed orders (instead of $0.03 per contract). As noted above, arbitrage phone positions, satellite tv, Exchangefone maintenance, single line maintenance, intra floor lines, voice circuits, data circuits at local carrier (entrance), and data circuits at in-house frame are being eliminated as of June 1, 2022 so the Exchange proposes to also eliminate references to such fees from Footnote 24. The Exchange also proposes to maintain the current modified rate of $5,000 for the SPX Floor Tier Appointment Fee under Footnote 24 (*i.e.,* increase the fee from $3,000 per permit to $5,000 permit regardless of whether the Exchange is operating in a modified state due to COVID–19 pandemic). The Exchange notes that it has not amended the original Tier Appointment Fee since its inception almost twelve years ago in July 2010.[24]

2. Statutory Basis

The Exchange believes the proposed rule change is consistent with the Securities Exchange Act of 1934 (the ''Act'') and the rules and regulations thereunder applicable to the Exchange and, in particular, the requirements of Section 6(b) of the Act.[25] Specifically, the Exchange believes the proposed rule change is consistent with the Section 6(b)(5)[26] requirements that the rules of an exchange be designed to prevent fraudulent and manipulative acts and practices, to promote just and equitable principles of trade, to foster cooperation and coordination with persons engaged in regulating, clearing, settling, processing information with respect to, and facilitating transactions in securities, to remove impediments to and perfect the mechanism of a free and open market and a national market system, and, in general, to protect investors and the public interest. Additionally, the Exchange believes the proposed rule change is consistent with the Section 6(b)(5)[27] requirement that the rules of an exchange not be designed to permit unfair discrimination between customers, issuers, brokers, or dealers.

As discussed above, the proposed changes are prompted by the Exchange's upcoming transition from its current trading floor, which it has occupied since the 1980s, to a brand new, modern and upgraded trading floor in a new facility. The Exchange believes the build out of a new modern trading floor is consistent with its commitment to open outcry trading and focus on providing the best possible trading experience for its customers. Indeed, the new trading floor provides a state-of-the-art

[24] *See* Securities Exchange Act Release No. 62386 (June 25, 2010), 75 FR 38566 (July 2, 2010) (SR–CBOE–2010–060).

[25] 15 U.S.C. 78f(b).

[26] 15 U.S.C. 78f(b)(5).

[27] *Id.*

environment and technology and more efficient use of physical space, which the Exchange believes better reflects and supports the current trading environment. The Exchange also believes the new infrastructure provides a cost-effective, streamlined, and modernized approach to floor connectivity. As described above, the upcoming transition will render much of the Exchange's current trading floor technology and infrastructure obsolete, as it will be replaced by new infrastructure in a new location (not owned by the Exchange). As such, the Exchange believes the proposed modifications to corresponding facility fees are not only necessary, but reasonable, equitable and not unfairly discriminatory as further discussed below. The Exchange also believes the proposed rule change results in a streamlined and simplified trading floor and facility fee structure.

Booth Fees

The Exchange believes the proposed Booth Fees are reasonable as they are not a significant departure from fees currently assessed for Booths on the current trading floor (and in some instances are even lower than currently assessed). Additionally, the Booths on the new trading floor will be slightly larger than the standard Booths available on the current trading floor. The proposed fees are also in line with similar fees charged currently and historically at other exchanges with a physical trading floor.[28] The Exchange believes that the proposed booth space fee is equitable and not unfairly discriminatory because it applies uniformly to trading floor participants who choose to rent Booths (and all booths are uniform and nearly identical in size). Moreover, the use of Booths, whether located away from or in a trading crowd, are optional and not necessary in order to conduct open outcry trading on the trading floor.

The Exchange believes the proposed rule changes to the Booth Policy and Agreement make non-substantive changes that merely clarify the Policy and Agreement, make it more accurate, and alleviate potential confusion, thereby removing impediments to and perfecting the mechanism of a free and open market and a national market system, and, in general, protecting investors and the public interest. The Exchange believes that notwithstanding any of the proposed changes, the Booth Policy and Agreement continues to ensure that trading floor Booths are leased to TPH organizations on equal and non-discriminatory terms.

Line to Cboe Floor Network

The Exchange believes the proposed Line to Cboe Floor Network fee is reasonable as TPHs will not be subject to the current lines and circuit fees set forth in the Fees Schedule, including for relocation and removal, that are assessed on the current trading floor for similar connectivity to the trading floor network. Additionally, unlike the current floor which requires independent wiring be used for each line or circuit and on a per device basis, the new trading floor will allow TPHs to maintain one Line (or 2 for redundancy purposes). Moreover, as discussed above, firms will no longer need to provide network equipment to support dedicated lines to the floor, as on the new trading floor, the Exchange will be providing the network switches and local area network (LAN) lines for all firms. Accordingly, the new trading floor will provide TPHs more flexibility to move and relocate as needed and be able to do so without incurring additional relocation and removal fees. The Exchange also notes other exchanges assess a variety of facility fees relating to connectivity and equipment in order to maintain their trading floor facilities.[29] The Exchange believes the proposed installation fee is also reasonable as the Exchange is recouping costs it incurs from a third party with respect to the installation of such Lines. The proposed fee also includes a redundant Line at no additional cost. The Exchange believes the proposed monthly and installation Line fees are equitable and not unfairly discriminatory as they will apply uniformly to all trading floor participants.

Co-Location and Meet-Me-Room

The Exchange believes it is reasonable to cap all TPHs and non-TPHs to 8 ''U'' because the Exchange no longer owns the premises in which the Meet-me-Room resides and there is finite amount of space. The proposed cap however applies to all TPHs and non-TPHs uniformly. Additionally, the Exchange believes 8 ''U'' should be sufficient amount of space for any TPH or non-TPH and that with such cap in place there is sufficient space to accommodate all TPHs or non-TPHs who request co-location service. The Exchange believes it's reasonable, equitable and not unfairly discriminatory to eliminate the Co-Location of Equipment Fee for Sponsored Users as it has not had any Sponsored Users in several years. If the Exchange were to approve a Sponsored User, such participant would merely be subject to the remaining (and lower) Co-Location of Equipment Fee (*i.e.,* $200 per 4 ''U''). The Exchange believes the proposed relocation and language updates to the current Co-Location fee are reasonable as the Exchange is not proposing to change the amount assessed but is merely updating and simplifying the Fees Schedule and making it easier to read.

The Exchange believes the proposed $25 per cross-connect monthly fee is reasonable as it is a modest fee that is a pass-through of the fee the Exchange is assessed by a third-party to maintain such cross connect. Additionally, the Exchange notes third-party vendors such as telecommunication providers will no longer be subject to the $50 per month fee for ''Data Circuits from Local Carrier to Equipment Shelf''. Additionally, the Exchange believes the proposed amount is in line (and lower than) the amount assessed by another exchange for similar cross connects.[30] The proposed cross connect installation fee is also reasonable as it is intended to recoup the fees incurred by the Exchange by third-party vendors for establishing the cross connects. The Exchange believes the proposed monthly and installation cross connect fees are also reasonable, equitable and not unfairly discriminatory as they apply uniformly to similarly situated market participants.

The Exchange believes the proposed Cboe Datacenter Services fee is reasonable as it recoups the costs the Exchange incurs for providing access to the Meet-me-Room for firms for purposes such as on-site support.

[28] In 2011, Nasdaq PHLX charged a flat $300 per month fee for Trading/Administrative Booth paid by floor brokers and clearing firms. See Securities Exchange Act Release No. 34–66086 (January 3, 2012), 77 FR 1111 (January 9, 2012) (SR-Phlx-2011–181). NYSE American currently assesses $40 per linear foot per month for all booth space utilized by such Floor Broker.

[29] For example, Nasdaq PHLX assesses a Floor Facility Fee of $330 per month for such purpose. *See* Securities Exchange Act Release No 69672 (June 5, 2013), 78 FR 33873 (May 30, 2013) (SR–PHLX–2013–58). Nasdaq PHLX also assesses a variety of options trading floor fees including for equipment services and relocation requests. *See* Nasdaq PHLX Options 7 Pricing Schedule, Section 9. Other Member Fees, A. Option Trading Floor Fees. *See also* NYSE America Options Fees Schedule, Section IV, Monthly Floor Communication, Connectivity, Equipment and Booth or Podia Fees and NYSE Price List, Equipment Fees.

[30] *See* Nasdaq PHLX Options 7 Pricing Schedule, Section 9. Other Member Fees, A. Option Trading Floor Fees, Cabinet-to-Cabinet Connectivity and Cabinet-to-Cabinet MPOE Connectivity, which are both subject to a $50 per month fee.

Additionally, the Exchange proposes to waive the fee for the month of June 2022, so that visits to the Meet-me-Room to address any onboarding questions or issues that may arise during the first month in the new facility are free of charge. Moreover, as noted above, the Exchange does not anticipate that access to the Meet-me-Room will be needed on a frequent basis. The Exchange believes the proposed fee is also equitable and not unfairly discriminatory as it will apply uniformly to all market participants that request this service, and the fee will be waived for all market participants for the month of June 2022.

Trading Floor Devices

The Exchange believes the proposed changes related to the PAR fee are reasonable as the combined proposed fees for using PAR (*i.e.,* Exchange Tablet fee and PAR Access fee) are modestly higher than the fee TPHs are currently assessed for use of PAR. The Exchange notes that although TPHs that use PAR will be subject to a modestly higher fee, the PAR Workstation fee has remained unchanged for over eleven years, notwithstanding technology changes and improvements over the last decade, including for example, the ability to also access Silexx from the same tablet on which PAR is accessed.[31] Moreover, the Exchange notes the proposed fee is still lower than fees assessed at other exchanges for trading floor terminals. For example, NYSE American assesses $450 per device per month for Floor Broker Handheld and an additional $215 per month per Exchange sponsored Floor Broker order entry system.[32] The Exchange believes the proposed Exchange Tablet fee is also reasonable as TPHs may, but do not have to, use an Exchange Tablet to access Cloud9. Indeed, they may use their own TPH-owned device for purposes of accessing Cloud9 and be subject to the alternative, and lower, TPH-Owned Device Authentication Fee.

The Exchange believes the proposed PAR Access fee is equitable and not unfairly discriminatory as it applies to all TPHs using PAR. Moreover, the proposed changes enable the Exchange to offer Exchange-provided tablets for a separate monthly fee to TPHs that wish to use them for Cloud9, which is the Exchange's new telecommunications system that it will offer on the new trading floor. Currently, TPHs are subject to various communication fees including monthly fees, installation fees, relocation fees and removal fees which will no longer be assessed by the Exchange as the Exchange's current communications offerings will be rendered obsolete upon the transition to the new trading floor.[33]

The Exchange believes the proposed TPH-Owned Device Authentication Fee is reasonable as the proposed fee is lower than the proposed fee assessed for Exchange Tablets which may alternatively be used if a TPH is looking to access Silexx or Cloud9. Additionally, the Exchange believes it's reasonable to assess TPHs a monthly fee for access to its network. Moreover, the Exchange believes the new trading floor provides TPHs more flexibility to move and relocate any of their devices by eliminating the need for installation, relocation and removal of connectivity lines to devices and consequently, corresponding monthly, installation, relocation and removal fees. The proposed fee also applies to all TPHs accessing the Cboe floor Network from their own device.

Replacement Items

The Exchange believes the proposed change to increase the tablet replacement fee is reasonable as the proposed amount better reflects the approximate cost to the Exchange to provide a replacement tablet to TPHs. Additionally, the Exchange believes adopting a $100 fee for replaced access badges is reasonable as the Exchange believes it will incentivize TPHs to keep track of their access badges and reduce the need for the Exchange to expend resources to print additional replacement badges. The Exchange believes these changes are also reasonable, equitable and not unfairly discriminatory because TPHs that lose these items or damage these items from non-normal wear or tear should be responsible for the cost of replacement. The Exchange believes the proposed fees will encourage TPHs to take proper care and track of these items. Additionally, the Exchange notes that it will not charge TPHs to replace defective items (that were not the result of non-normal wear and tear).

Obsolete Fees

The Exchange believes eliminating the facility fees discussed above is reasonable as such corresponding services and architecture will be rendered obsolete upon transitioning to the new trading floor. Additionally, the Exchange believes the proposed new fee structure as compared to the fees being eliminated provides for a more streamlined and simplified approach to facility fees. The Exchange believes the proposed elimination of these fees is equitable and not unfairly discriminatory as it will apply uniformly to all TPHs. The proposal to eliminate references to these fees in Footnote 12, 24 and 50 also maintains clarity in the Fees Schedule and avoids potential confusion.

Footnote 24

The Exchange believes it's reasonable to provide that Footnote 24 will not apply during the period of June 1–June 3, 2022 in order to provide seamless billing in the month of June 2022. Particularly, as discussed above, on June 6, 2022, the Exchange will no longer be operating in a modified state due to the COVID–19 pandemic as the Exchange will no longer be maintaining a modified configuration of trading crowds to implement social distancing nor will it reduce or limit how many floor participants may access the trading floor. Accordingly, because the Exchange will not be considered to be operating in a modified configuration as of June 6, 2022, Footnote 24 will no longer be applicable and the modified billing practices will revert back to original billing. However, because the Exchange will be operating in a modified state between June 1–June 3, 2022, absent a proposed rule change, Footnote 24 would still apply thereby subjecting TPHs to disparate billing for only three trading days of the month. The Exchange therefore believes the proposed change is reasonable, especially given the short amount of time Footnote 24 would otherwise apply. The Exchange believes its proposal to maintain the current modified rate of $5,000 for the SPX Floor Tier Appointment Fee under Footnote 24 (*i.e.,* increase the fee from $3,000 per permit to $5,000 permit regardless of whether the Exchange is operating in a modified state due to COVID–19 pandemic)[34] is reasonable because the proposed amount is not significantly higher than was previously assessed. Additionally, the Exchange notes that it has not amended the Market-Maker SPX Tier Appointment Fee since such fee was adopted nearly

[31] *See* Securities Exchange Act Release No. 63701 (January 11, 2011), 76 FR 2934 (January 18, 2011) (SR–CBOE–2010–116).

[32] *See also* NYSE America Options Fees Schedule, Section IV, Monthly Floor Communication, Connectivity, Equipment and Booth or Podia Fees.

[33] *See* Cboe Options Fee Schedule, Communications Fees.

[34] The Exchange proposes to eliminate this language from Footnote 24 as it will no longer be considered a ''modified'' rate, and instead update the rate reflected in the Market-Maker Tier Appointment Fees table.

twelve years ago in July 2010.[35] The proposed change also is equitable and not unfairly discriminatory as it applies to all similarly situated TPHs.

B. Self-Regulatory Organization's Statement on Burden on Competition

The Exchange does not believe that the proposed rule change will impose any burden on competition that is not necessary or appropriate in furtherance of the purposes of the Act. The Exchange does not believe that the proposed rule changes will impose any burden on intramarket competition that is not necessary or appropriate in furtherance of the purposes of the Act because the proposed changes would be applied in the same manner to all similarly situated participants and as such, would not impose a disparate burden on competition among the same classes of market participants. As described in further detail above, the proposed fees are also applicable only to market participants that choose to avail themselves to the corresponding facility services. For example, only firms that choose to rent Booths (which are optional and not required for open-outcry trading) will be subject to the proposed Booth Fees. Similarly, only firms that choose to purchase Exchange-provided tablets are subject to the tablet fee, and firms may otherwise choose to purchase and provide their own tablets.

The Exchange does not believe that the proposed rule change will impose any burden on intermarket competition that is not necessary or appropriate in furtherance of the purposes of the Act because the proposed rule changes apply only to fees relating to the Exchange's floor facility. Further, as described in detail above, the Exchange believes its proposed facilities fees are in line with facility fees assessed at other exchanges that maintain physical trading floors. Additionally, the Exchange notes it operates in a highly competitive market. In addition to Cboe Options, TPHs have numerous alternative venues that they may participate on and director their order flow, including 15 other options exchanges (four of which also maintain physical trading floors), as well as off-exchange venues, where competitive products are available for trading. Based on publicly available information, no single options exchange has more than 16% of the market share of executed volume of options trades.[36] Therefore, no exchange possesses significant pricing power in the execution of option order flow. Moreover, the Commission has repeatedly expressed its preference for competition over regulatory intervention in determining prices, products, and services in the securities markets. Specifically, in Regulation NMS, the Commission highlighted the importance of market forces in determining prices and SRO revenues and, also, recognized that current regulation of the market system ''has been remarkably successful in promoting market competition in its broader forms that are most important to investors and listed companies.'' [37] The fact that this market is competitive has also long been recognized by the courts. In NetCoalition v. Securities and Exchange Commission, the D.C. Circuit stated as follows: ''[n]o one disputes that competition for order flow is 'fierce.' . . . As the SEC explained, '[i]n the U.S. national market system, buyers and sellers of securities, and the broker-dealers that act as their order-routing agents, have a wide range of choices of where to route orders for execution'; [and] 'no exchange can afford to take its market share percentages for granted' because 'no exchange possesses a monopoly, regulatory or otherwise, in the execution of order flow from broker dealers'. . . .''.[38] Accordingly, the Exchange does not believe its proposed changes to the incentive programs impose any burden on competition that is not necessary or appropriate in furtherance of the purposes of the Act.

C. Self-Regulatory Organization's Statement on Comments on the Proposed Rule Change Received From Members, Participants, or Others

The Exchange neither solicited nor received comments on the proposed rule change.

III. Date of Effectiveness of the Proposed Rule Change and Timing for Commission Action

The foregoing rule change is effective upon filing pursuant to Section 19(b)(3)(A) [39] of the Act and subparagraph (f)(2) of Rule 19b–4 [40] thereunder, because it establishes a due, fee, or other charge imposed by the Exchange.

At any time within 60 days of the filing of such proposed rule change, the Commission summarily may temporarily suspend such rule change if it appears to the Commission that such action is necessary or appropriate in the public interest, for the protection of investors, or otherwise in furtherance of the purposes of the Act. If the Commission takes such action, the Commission shall institute proceedings under Section 19(b)(2)(B) [41] of the Act to determine whether the proposed rule change should be approved or disapproved.

IV. Solicitation of Comments

Interested persons are invited to submit written data, views, and arguments concerning the foregoing, including whether the proposed rule change is consistent with the Act. Comments may be submitted by any of the following methods:

Electronic Comments

- Use the Commission's internet comment form (*http://www.sec.gov/rules/sro.shtml*); or
- Send an email to *rule-comments@sec.gov*. Please include File Number SR–CBOE–2022–029 on the subject line.

Paper Comments

- Send paper comments in triplicate to Secretary, Securities and Exchange Commission, 100 F Street NE, Washington, DC 20549–1090.

All submissions should refer to File Number SR–CBOE–2022–029. This file number should be included on the subject line if email is used. To help the Commission process and review your comments more efficiently, please use only one method. The Commission will post all comments on the Commission's internet website (*http://www.sec.gov/rules/sro.shtml*). Copies of the submission, all subsequent amendments, all written statements with respect to the proposed rule change that are filed with the Commission, and all written communications relating to the proposed rule change between the Commission and any person, other than those that may be withheld from the public in accordance with the

[35] *See* Securities Exchange Act Release No. 62386 (June 25, 2010), 75 FR 38566 (July 2, 2010) (SR–CBOE–2010–060).

[36] *See* Cboe Global Markets, U.S. Options Market Volume Summary by Month (May 31, 2022), available at *http://markets.cboe.com/us/options/market_share/.*

[37] *See* Securities Exchange Act Release No. 51808 (June 9, 2005), 70 FR 37496, 37499 (June 29, 2005).

[38] *NetCoalition* v. *SEC*, 615 F.3d 525, 539 (D.C. Cir. 2010) (quoting Securities Exchange Act Release No. 59039 (December 2, 2008), 73 FR 74770, 74782–83 (December 9, 2008) (SR–NYSEArca–2006–21)).

[39] 15 U.S.C. 78s(b)(3)(A).

[40] 17 CFR 240.19b–4(f)(2).

[41] 15 U.S.C. 78s(b)(2)(B).

provisions of 5 U.S.C. 552, will be available for website viewing and printing in the Commission's Public Reference Room, 100 F Street NE, Washington, DC 20549, on official business days between the hours of 10:00 a.m. and 3:00 p.m. Copies of the filing also will be available for inspection and copying at the principal office of the Exchange. All comments received will be posted without change. Persons submitting comments are cautioned that we do not redact or edit personal identifying information from comment submissions. You should submit only information that you wish to make available publicly. All submissions should refer to File Number SR–CBOE–2022–029, and should be submitted on or before July 21, 2022.

For the Commission, by the Division of Trading and Markets, pursuant to delegated authority.[42]

J. Matthew DeLesDernier,

Assistant Secretary.

[FR Doc. 2022–13943 Filed 6–29–22; 8:45 am]

BILLING CODE 8011–01–P

SOCIAL SECURITY ADMINISTRATION

[Docket No: SSA–2022–0030]

Agency Information Collection Activities: Proposed Request

The Social Security Administration (SSA) publishes a list of information collection packages requiring clearance by the Office of Management and Budget (OMB) in compliance with Public Law 104–13, the Paperwork Reduction Act of 1995, effective October 1, 1995. This notice includes revisions and one extension of OMB-approved information collections.

SSA is soliciting comments on the accuracy of the agency's burden estimate; the need for the information; its practical utility; ways to enhance its quality, utility, and clarity; and ways to minimize burden on respondents, including the use of automated collection techniques or other forms of information technology. Mail, email, or fax your comments and recommendations on the information collection(s) to the OMB Desk Officer and SSA Reports Clearance Officer at the following addresses or fax numbers.

(OMB) Office of Management and Budget, Attn: Desk Officer for SSA, Comments: *https://www.reginfo.gov/public/do/PRAMain.* Submit your comments online referencing Docket ID Number [SSA–2022–0030].

(SSA) Social Security Administration, OLCA, Attn: Reports Clearance Director, 3100 West High Rise, 6401 Security Blvd., Baltimore, MD 21235, Fax: 410–966–2830, Email address: *OR.Reports.Clearance@ssa.gov*.

Or you may submit your comments online through *https://www.reginfo.gov/public/do/PRAMain,* referencing Docket ID Number [SSA–2022–0030].

The information collections below are pending at SSA. SSA will submit them to OMB within 60 days from the date of this notice. To be sure we consider your comments, we must receive them no later than August 29, 2022. Individuals can obtain copies of the collection instruments by writing to the above email address.

1. Application for Lump Sum Death Payment—20 CFR 404.390–404.392—0960–0013. SSA uses Form SSA–8 to collect information needed to authorize payment of the lump sum death payment (LSDP) to a widow, widower, or children as defined in section 202(i) of the Social Security Act (Act). Respondents complete the application for this one-time payment through use of the paper form, or personal interview with an SSA employee either via telephone, or in a field office. For all personal interviews (either telephone or in-person), we collect the information via our electronic Modernized Claim System (MCS) screens. When a respondent completes the paper Form SSA–8, they mail it back to SSA. Respondents are applicants for the LSDP.

Type of Request: Revision of an OMB-approved information collection.

Modality of completion	Number of respondents	Frequency of response	Average burden per response (minutes)	Estimated total annual burden (hours)	Average theoretical hourly cost amount (dollars) *	Average wait time in field office or for teleservice centers (minutes) **	Total annual opportunity cost (dollars) ***
SSA–8—(MCS Version)	733,254	1	9	109,988	* $28.01	** 21	*** $10,269,222
SSA–8 –(Paper Version)	5,747	1	10	958	* $28.01		*** $26,834
Totals	739,001			110,946			*** $10,296,056

* We based this figure on the average U.S. worker's hourly wages, as reported by Bureau of Labor Statistics data (*https://www.bls.gov/oes/current/oes_nat.htm*).

** We based this figure by averaging the average FY 2022 wait times for field offices and teleservice centers, based on SSA's current management information data.

*** This figure does not represent actual costs that SSA is imposing on recipients of Social Security payments to complete this application; rather, these are theoretical opportunity costs for the additional time respondents will spend to complete the application. *There is no actual charge to respondents to complete the application.*

2. Representative Payee Evaluation Report—20 CFR 404.2065 & 416.665—0960–0069. Sections 205(j) and 1631(a)(2) of the Act state that SSA may authorize payment of Social Security benefits or Supplemental Security Income (SSI) payments to a representative payee on behalf of individuals unable to manage, or direct the management of, those funds themselves. SSA requires certain appointed representative payees to report once each year on how they used or conserved those funds. Some representative payees, such as natural or adoptive parents of minor children or spouses of beneficiaries, are generally not required to complete this report. When a representative payee fails to adequately report to SSA, SSA conducts a face-to-face interview with the payee and completes Form SSA–624–F5, Representative Payee Evaluation Report, to determine the continued suitability of the representative payee to serve as a payee. In addition to interviewing the representative payee, we also interview the recipient, and custodian (if other than the payee), to confirm the information the payee provides, and to ensure the payee is meeting the recipient's current needs. However, we do not require the interviews to be face-to-face with non-representative payees. The respondents are individuals or organizations serving as representative

[42] 17 CFR 200.30–3(a)(12).

payees for individuals receiving Title II benefits or Title XVI payments, and who fail to comply with SSA's statutory annual reporting requirement, and the recipients for whom they act as payee.

Type of Request: Revision of an OMB-approved information collection.

Modality of completion	Number of respondents	Frequency of response	Average burden per response (minutes)	Estimated total annual burden (hours)	Average theoretical hourly cost amount (dollars) *	Average wait time in field office or for teleservice centers (minutes)	Total annual opportunity cost (dollars) ****
SSA–624–F5 (Individuals)	6,537	1	30	3,269	* $28.01	** 21	**** $155,652
SSA–624–F5 (State and Local Government)	38	1	30	19	* $21.58	*** 24	**** $734
SSA–624–F5 (Businesses)	263	1	30	132	$14.80	2*** 4	**** $3,508
Totals	6,838			3,420			**** $159,894

* We based these figures on the average U.S. worker's hourly wages (*https://www.bls.gov/oes/current/oes_nat.htm*), State and Local Government Social and Human Services Assistants (*https://www.bls.gov/oes/current/oes211093.htm*), and Personal Care and Service Workers (*https://www.bls.gov/oes/current/oes399099.htm*), as reported by Bureau of Labor Statistics data.

** We based this figure by averaging the FY 2022 wait times for field offices and teleservice centers, based on SSA's current management information data.

*** We based these figures on the average FY 2022 wait times for field offices, based on SSA's current management information data.

**** This figure does not represent actual costs that SSA is imposing on recipients of Social Security payments to complete this application; rather, these are theoretical opportunity costs for the additional time respondents will spend to complete the application. *There is no actual charge to respondents to complete the application.*

3. Application for Benefits Under the Italy-U.S. International Social Security Agreement—20 CFR 404.1925—0960–0445. As per the November 1, 1978 totalization agreement between the United States (U.S.) and Italian Social Security agencies, residents of Italy filing an application for U.S. Social Security benefits directly with one of the Italian Social Security agencies must complete Form SSA–2528–IT. SSA uses Form SSA–2528–IT to establish age, relationship, citizenship, marriage, death, military service, or to evaluate a family bible or other family record when determining eligibility for U.S. benefits. The Italian Social Security agencies assist applicants in completing Form SSA–2528–IT, and then forward the application to SSA for processing. The respondents are individuals living in Italy who wish to file for U.S. Social Security benefits.

Type of Request: Revision of an OMB-approved information collection.

Modality of completion	Number of respondents	Frequency of response	Average burden per response (minutes)	Estimated total annual burden (hours)	Average theoretical hourly cost amount (dollars) *	Total annual opportunity cost (dollars) **
SSA–2528–IT	462	1	20	154	$28.01	** $4,314

* We based this figure on the average U.S. worker's hourly wages, as reported by Bureau of Labor Statistics data (*https://www.bls.gov/oes/current/oes_nat.htm*).

** This figure does not represent actual costs that SSA is imposing on recipients of Social Security payments to complete this application; rather, these are theoretical opportunity costs for the additional time respondents will spend to complete the application. *There is no actual charge to respondents to complete the application.*

4. Request for Social Security Statement—20 CFR 404.810—0960–0466. Section 205(c)(2)(A) of the Act requires the Commissioner of SSA to establish and maintain records of wages paid to, and amounts of self-employment income derived by, each individual, as well as the periods in which such wages were paid, and such income derived. An individual may complete and mail Form SSA–7004 to SSA to obtain a Statement of Earnings or Quarters of Coverage, or they may access their statement online using *my* Social Security. SSA uses the information from Form SSA–7004 to identify a respondent's Social Security earnings records; extract posted earnings information; calculate potential benefit estimates; produce the resulting Social Security statements; and mail them to the requesters. The respondents are Social Security number holders requesting information about their Social Security earnings records and estimates of their potential benefits.

Type of Request: Revision of an OMB-approved information collection.

Modality of completion	Number of respondents	Frequency of response	Average burden per response (minutes)	Estimated total annual burden (hours)	Average theoretical hourly cost amount (dollars) *	Total annual opportunity cost (dollars) **
SSA–7004	32,936	1	5	2,745	* $28.01	** $76,887

* We based this figure on the average U.S. worker's hourly wages, as reported by Bureau of Labor Statistics data (*https://www.bls.gov/oes/current/oes_nat.htm*).

** This figure does not represent actual costs that SSA is imposing on recipients of Social Security payments to complete this application; rather, these are theoretical opportunity costs for the additional time respondents will spend to complete the application. *There is no actual charge to respondents to complete the application.*

5. Agency/Employer Government Pension Offset Questionnaire—20 CFR 404.408(a)—0960–0470. When an individual is concurrently receiving Social Security spousal, or surviving spousal, benefits and a government pension, the individual may have the amount of Social Security benefits reduced by the government pension amount. This is the Government Pension Offset (GPO). SSA uses Form SSA–L4163 to collect accurate pension information from the Federal or State government agency paying the pension for purposes of applying the pension

offset provision. SSA uses this form only when (1) the claimant does not have the information; and (2) the pension-paying agency has not cooperated with the claimant. Respondents are State government agencies, which have information SSA needs to determine if the GPO applies, and the amount of offset.

Type of Request: Revision of an OMB-approved information collection.

Modality of completion	Number of respondents	Frequency of response	Average burden per response (minutes)	Estimated total annual burden (hours)	Average theoretical hourly cost amount (dollars) *	Total annual opportunity cost (dollars) **
SSA–L4163	2,911	1	3	146	* $21.13	*** $3,085

* We based this figure on the median hourly salary of State Agencies Information and Record Clerks hourly wages, as reported by Bureau of Labor Statistics data (*https://www.bls.gov/oes/current/oes434199.htm*).

** This figure does not represent actual costs that SSA is imposing on recipients of Social Security payments to complete this application; rather, these are theoretical opportunity costs for the additional time respondents will spend to complete the application. *There is no actual charge to respondents to complete the application.*

6. Beneficiary Recontact Report—20 CFR 404.703 & 404.705—0960–0502. SSA investigates recipients of disability payments to determine their continuing eligibility for payments. Research indicates recipients may fail to report circumstances that affect their eligibility. Two such cases are: (1) when parents receiving disability benefits for their child marry; and (2) the removal of an entitled child from parents' care. SSA uses Form SSA–1588–SM to ask mothers or fathers about both their marital status and children under their care, to detect overpayments and avoid continuing payment to those are no longer entitled. Respondents are recipients of mothers' or fathers' Social Security benefits.

Type of Request: Revision of an OMB-approved information collection.

Modality of completion	Number of respondents	Frequency of response	Average burden per response (minutes)	Estimated total annual burden (hours)	Average theoretical hourly cost amount (dollars) *	Total annual opportunity cost (dollars) **
SSA–1588–SM	72,565	1	5	6,047	* $28.01	** $169,376

* We based this figure on the average U.S. worker's hourly wages, as reported by Bureau of Labor Statistics data (*https://www.bls.gov/oes/current/oes_nat.htm*).

** This figure does not represent actual costs that SSA is imposing on recipients of Social Security payments to complete this application; rather, these are theoretical opportunity costs for the additional time respondents will spend to complete the application. *There is no actual charge to respondents to complete the application.*

7. Complaint Form for Allegations of Discrimination in Programs or Activities Conducted by the Social Security Administration—0960–0585. SSA uses Form SSA–437 to investigate and formally resolve complaints of discrimination based on disability, race, color, national origin (including limited English language proficiency), sex (including sexual orientation and gender identity), age, religion, or retaliation for having participated in a proceeding under this administrative complaint process in connection with an SSA program or activity. Individuals who believe SSA discriminated against them on any of the above bases may file a written complaint of discrimination. SSA uses the information to: (1) identify the complaint; (2) identify the alleged discriminatory act; (3) establish the date of such alleged action; (4) establish the identity of any individual(s) with information about the alleged discrimination; and (5) establish other relevant information that would assist in the investigation and resolution of the complaint. Respondents can submit the form or written complaint via mail or email. Respondents are individuals who believe SSA, or SSA employees, contractors, or agents, discriminated against them in connection with programs or activities conducted by SSA.

Type of Request: Revision of an OMB-approved information collection.

Modality of completion	Number of respondents	Frequency of response	Average burden per response (minutes)	Estimated total annual burden (hours)	Average theoretical hourly cost amount (dollars) *	Total annual opportunity cost (dollars) **
SSA–437	500	1	60	500	* $19.86	** $9,930

* We based this figure by averaging both the average DI payments based on SSA's current FY 2022 data (*https://www.ssa.gov/legislation/2022factsheet.pdf*), and the average U.S. worker's hourly wages, as reported by Bureau of Labor Statistics data (*https://www.bls.gov/oes/current/oes_nat.htm*).

** This figure does not represent actual costs that SSA is imposing on recipients of Social Security payments to complete this application; rather, these are theoretical opportunity costs for the additional time respondents will spend to complete the application. *There is no actual charge to respondents to complete the application.*

8. Private Printing and Modification of Prescribed Application and Other Forms—20 CFR 422.527—0960–0663. 20 CFR 422.527 of the Code of Federal Regulations requires a person, institution, or organization (third-party entities) to obtain approval from SSA prior to reproducing, duplicating, or privately printing any application or other form the agency owns. To obtain SSA's approval, entities must make their requests in writing using their company letterhead, providing the required information set forth in the regulation. SSA uses the information to: (1) ensure requests comply with the law and regulations, and (2) process requests from third-party entities who want to reproduce, duplicate, or privately print any SSA application or other SSA form. SSA employees review the requests and provide approval via email or mail to the third-party entities. The respondents are third-party entities who submit a request to SSA to reproduce, duplicate, or privately print an SSA-owned form.

Type of Request: Revision of an OMB-approved information collection.

Modality of completion	Number of respondents	Frequency of response	Average burden per response (minutes)	Estimated total annual burden (hours)	Average theoretical hourly cost amount (dollars) *	Total annual opportunity cost (dollars) **
20 CFR 422.527	10	15	10	25	* $16.17	** $404

* We based this figure on the median hourly salary of third-party Personal Care and Service occupations hourly wages, as reported by Bureau of Labor Statistics data (*https://www.bls.gov/oes/current/oes390000.htm*).
** This figure does not represent actual costs that SSA is imposing on recipients of Social Security payments to complete this application; rather, these are theoretical opportunity costs for the additional time respondents will spend to complete the application. *There is no actual charge to respondents to complete the application.*

9. Technical Updates to Applicability of the Supplemental Security Income (SSI) Reduced Benefit Rate for Individuals Residing in Medical Treatment Facilities—20 CFR 416.708(k)—0960–0758. Section 1611(e)(1)(A) of the Act specifies residents of public institutions are ineligible for SSI. However, Sections 1611(e)(1)(B) and (G) of the Act list certain exceptions to this provision, making it necessary for SSA to collect information about SSI recipients who enter or leave a medical treatment facility or other public or private institution. SSA's regulation 20 CFR 416.708(k) establishes the reporting guidelines that implement this legislative requirement. SSA uses this information collection to determine SSI eligibility or the benefit amount for SSI recipients who enter or leave institutions. SSA personnel collect this information directly from SSI recipients, or from someone reporting on their behalf. An SSI recipient who enters an institution may be unable to report; therefore, a family member sometimes makes this report on behalf of the recipient. When contacting SSA, the recipient, or family member of the recipient, provides the name of the institution, the date of admission, and the expected date of discharge. The respondents are SSI recipients who enter or leave an institution, or individuals reporting on their behalf.

Type of Request: Extension of an OMB-approved information collection.

Modality of completion	Number of respondents	Frequency of response	Average burden per response (minutes)	Estimated total annual burden (hours)	Average theoretical hourly cost amount (dollars) *	Average wait time for teleservice centers (minutes) **	Total annual opportunity cost (dollars) ***
Technical Updates Statement/ Institutional Residents Screens	225,566	1	7	26,316	* $19.86	** 19	*** $1,941,216

* We based this figure by averaging both the average DI payments based on SSA's current FY 2022 data (*https://www.ssa.gov/legislation/2022factsheet.pdf*), and the average U.S. worker's hourly wages, as reported by Bureau of Labor Statistics data (*https://www.bls.gov/oes/current/oes_nat.htm*).
** We based this figure on the average FY 2022 wait times for teleservice centers, based on SSA's current management information data.
*** This figure does not represent actual costs that SSA is imposing on recipients of Social Security payments to complete this application; rather, these are theoretical opportunity costs for the additional time respondents will spend to complete the application. *There is no actual charge to respondents to complete the application.*

10. Statement for Determining Continuing Entitlement for Special Veterans Benefits (SVB)—0960–0782. Title VIII of the Act provides for the payment of Special Veterans benefits (SVB) to certain World War II veterans who reside outside of the U.S. SSA regularly reviews individuals' claims for SVB to determine their continued eligibility and correct payment amounts. Individuals living outside the U.S. receiving SVB must report to SSA any changes that may affect their benefits. These include changes such as: (1) a change in mailing address or residence; (2) an increase or decrease in a pension, annuity, or other recurring benefit; (3) a return or visit to the U.S. for a calendar month or longer; or (4) an inability to manage benefits. SSA uses Form SSA–2010–F6, to collect this information. All beneficiaries have face-to-face interviews with the Federal Benefits Unit (FBU) every year who assist them in completing this form. Respondents are SVB beneficiaries living outside the U.S. Type of Request: Revision of an OMB-approved information collection.

Modality of completion	Number of respondents	Frequency of response	Average burden per response (minutes)	Estimated total annual burden (hours)	Average theoretical hourly cost amount (dollars) *	Total annual opportunity cost (dollars) **
SSA–2010–F6	85	1	20	28	* $28.01	** $784

* We based this figure on the average U.S. worker's hourly wages, as reported by Bureau of Labor Statistics data (*https://www.bls.gov/oes/current/oes_nat.htm*).
** This figure does not represent actual costs that SSA is imposing on recipients of Social Security payments to complete this application; rather, these are theoretical opportunity costs for the additional time respondents will spend to complete the application. *There is no actual charge to respondents to complete the application.*

11. Waiver of Supplemental Security Income Payment Continuation—20 CFR 416.1400–416.1422—0960–0783. SSI recipients who wish to discontinue their SSI payments while awaiting a determination on their appeal complete Form SSA–263, Waiver of Supplemental Security Income Payment Continuation, to inform SSA of this decision. SSA collects the information to determine whether the SSI recipient meets the provisions of the Social Security Act regarding waiver of payment continuation and as proof respondents no longer want their payments to continue. Respondents are recipients of SSI payments who wish to discontinue

receipt of payment while awaiting a determination on their appeal.

Type of Request: Revision of an OMB-approved information collection.

Modality of completion	Number of respondents	Frequency of response	Average burden per response (minutes)	Estimated total annual burden (hours)	Average theoretical hourly cost amount (dollars) *	Average wait time in field office or teleservice centers (minutes) **	Total annual opportunity cost (dollars) ***
SSA–263	3,676	1	5	306	* $11.70	** 21	*** $18,638

* We based this figure on the average DI payments based on SSA's current FY 2022 data (*https://www.ssa.gov/legislation/2022factsheet.pdf).*

** We based this figure by averaging the average FY 2022 wait times for field offices and teleservice centers, based on SSA's current management information data.

*** This figure does not represent actual costs that SSA is imposing on recipients of Social Security payments to complete this application; rather, these are theoretical opportunity costs for the additional time respondents will spend to complete the application. *There is no actual charge to respondents to complete the application.*

Dated: June 27, 2022.

Faye I. Lipsky,

Director, Office of Regulations and Reports Clearance, Social Security Administration.

[FR Doc. 2022–13998 Filed 6–29–22; 8:45 am]

BILLING CODE 4191–02–P

SOCIAL SECURITY ADMINISTRATION

[Docket No. SSA–2022–0020]

Maximum Dollar Limit in the Fee Agreement Process

AGENCY: Social Security Administration.

ACTION: Notice.

SUMMARY: We are increasing the maximum dollar amount limit for fee agreements approved under the Social Security Act (the Act) to $7,200. Effective November 30, 2022, we may approve fee agreements up to the new dollar limit, provided that the fee agreement otherwise meets the statutory conditions of the agreement process.

DATES: We will apply this notice beginning on November 30, 2022.

FOR FURTHER INFORMATION CONTACT: Mary Quatroche, Office of Vocational, Evaluation, and Process Policy in the Office of Disability Policy, Social Security Administration, 6401 Security Boulevard, Baltimore, MD 21235–6401 (410)–966–4794.

For information on eligibility or filing for benefits, call SSA's national toll-free number, 1–800–772–1213 or TTY 1–800–325–0778, or visit SSA's internet site, Social Security Online at *http://www.socialsecurity.gov.*

SUPPLEMENTARY INFORMATION: The Act provides a streamlined process for a representative to obtain approval of the fee the representative wishes to charge for representing a claimant before us.[1] To use that process, the representative(s) and the claimant must agree, in writing, to a fee that does not exceed the lesser of 25 percent of past due benefits or a prescribed dollar amount. Section 5106 of the Omnibus Budget Reconciliation Act (OBRA) of 1990, Public Law 101–508, set the initial fee amount at $4,000 and gave the Commissioner the authority to increase it periodically, provided that the cumulative rate of increase did not at any time exceed the rate of increase in the primary insurance amount (PIA) since January 1, 1991. The law further provided that notice of any increased amount shall be published in the **Federal Register**. On February 4, 2009, we published a notice raising the maximum fee to $6,000, effective June 22, 2009, which is the current maximum dollar amount for fee agreements.[2]

With this notice, we announce that the maximum dollar amount for fee agreements will increase to $7,200, effective November 30, 2022. This increase does not exceed the rate of increase provided in the OBRA of 1990. We expect that this increase will compensate representatives for their services while ensuring claimants are protected from excessive fees.

In setting the new cap, we considered a number of factors, including: feedback we received about the current fee cap, the Cost of Living Adjustment rates, PIAs, data about fees authorized under the current fee cap, increases in disability benefits, data about case backlogs, and the effects on our claimants.

Beginning November 30, 2022, decision makers may approve a fee agreement up to the new dollar limit if the fee agreement meets the statutory conditions for approval, no exceptions to the fee agreement process exist, and the favorable determination or decision is issued on or after this date. We are setting this date to ensure there is adequate time to provide training and guidance to our employees and to make necessary changes in our information technology infrastructure.

The Acting Commissioner of Social Security, Kilolo Kijakazi, Ph.D., M.S.W., having reviewed and approved this document, is delegating the authority to electronically sign this document to Faye I. Lipsky, who is the primary **Federal Register** Liaison for the Social Security Administration, for purposes of publication in the **Federal Register**.

Faye I. Lipsky,

Federal Register Liaison, Office of Legislation and Congressional Affairs, Social Security Administration.

[FR Doc. 2022–13996 Filed 6–29–22; 8:45 am]

BILLING CODE 4191–02–P

[1] 42 U.S.C. 406(a) and 1383(d)(2)(A).

[2] 74 FR 6080 (2009).

DEPARTMENT OF TRANSPORTATION

Federal Transit Administration

Early Scoping Notice for the Metropolitan Atlanta Rapid Transit Authority's (MARTA) Proposed Clifton Corridor Transit Initiative in Fulton County and DeKalb County, Georgia

AGENCY: Federal Transit Administration (FTA), Department of Transportation (DOT).

ACTION: Early scoping notice.

SUMMARY: The Federal Transit Administration (FTA) and Metropolitan Atlanta Rapid Transit Authority (MARTA) issue this early scoping notice to advise tribes, agencies, and the public that FTA and MARTA will explore potential alternatives for high-capacity, fixed-guideway transit extending from Lindbergh Center in the City of Atlanta, Fulton County, GA to the City of Decatur in DeKalb County, GA. The project would enhance mobility and accessibility by providing a more robust transit network by linking to existing heavy rail transit lines, with the potential to connect to other planned regional transit expansion projects. This notice invites the public and agency officials to help support the ongoing alternatives analysis and system planning efforts by reviewing information and commenting.

DATES: Two in-person public information open houses will be held at the following times:

- Thursday, July 14, 2022 at 6:30 p.m., at the Emory University Rollins School of Public Health Auditorium, located at 1518 Clifton Road, Atlanta, GA 30322.
- Saturday, July 16, 2022 from 11:00 a.m. to 4:00 p.m., in the atrium of MARTA Headquarters, located at 2424 Piedmont Road NE, Atlanta, GA 30324.

MARTA Headquarters is located at the western terminus of the proposed project in Atlanta's Lindbergh/Morosgo neighborhood, near the existing Lindbergh Center MARTA rail station.

Two online public early scoping meetings will be held at the following times (all times are Eastern Daylight Time):

- Tuesday, July 19, 2022 at 10:00 a.m.
- Wednesday, July 20, 2022 at 6:30 p.m.

Registration information for these public forums can be found below. Pre-registration is not required to attend the in-person forums but is recommended for planning purposes.

- Online Public Early Scoping Meeting #1—Tuesday, July 19, 2022, at 10:00 a.m.: *https://us06web.zoom.us/meeting/register/tZIqdO2grz4tHdX-yuIUdBt6HInsuDJ0GGGL*
- Online Public Early Scoping Meeting #2—Wednesday, July 20, 2022, at 6:30 p.m.: *https://us06web.zoom.us/meeting/register/tZMlfuuvpzMpGtL3bCvFQ4S649P1S_JmFwk9*
- In-person Public Information Open House #1—Emory Rollins School of Public Health Auditorium. Thursday, July 14, 2022, at 6:30 p.m.: *https://tinyurl.com/4hxxmumb*
- In-person Public Information Open House #2—MARTA Atrium. Saturday, July 16, 2022, from 11:00 a.m. to 4:00 p.m.: *https://www.surveymonkey.com/r/N8DC2RQ*

In-person or electronic scoping comments are requested by August 30, 2022, and may be mailed or emailed to the MARTA Project Manager at the address below or provided via a comment form on the project website here: *https://ConnectClifton.com.* Virtual forums will be recorded and made available via the project website.

ADDRESSES: Written or electronic comments should be sent to Bryan Hobbs, Project Manager, MARTA, 2424 Piedmont Road NE, Atlanta, GA 30324–3330 or by email to *clifton@itsmarta.com.* If submitting an electronic comment, please type ''Clifton Corridor Study Early Scoping Comment for MARTA'' in the subject line of the email. MARTA maintains social media accounts for general announcements and will notify social media followers, in conjunction with publication of this notice, to submit comments to the email address above. Registration links for the early scoping forums can be found on the project website: *https://ConnectClifton.com.*

The forums will include accessibility accommodations for persons with disabilities. If translation, closed captioning, or other special accommodations are needed, please contact the Project Manager, Bryan Hobbs at (*jhobbs@itsmarta.com* or 404–848–5733) at least two weeks before the early scoping forums.

FOR FURTHER INFORMATION CONTACT: Julia Walker, Environmental Protection Specialist, FTA Region IV, 230 Peachtree Street, NW, Suite 1400, Atlanta, GA 30303 or email: *julia.walker@dot.gov.*

SUPPLEMENTARY INFORMATION:

Early Scoping

The early scoping process is intended to support the alternatives analysis, any future National Environmental Policy Act (NEPA) scoping process, and will help streamline the future development of an Environmental Impact Statement (EIS), if warranted. In addition, it supports FTA's planning requirements associated with the Capital Investment Grants New Starts (''Section 5309'') funding program for major capital transit investments. While recent legislation has led to changes in the New Starts process, MARTA will comply with all relevant FTA requirements relating to planning and project development to help analyze and screen alternatives in preparation for the NEPA process. Early scoping is an optional step in the NEPA process that precedes NEPA scoping, which normally begins when the FTA and the grant applicant publish a Notice of Intent to prepare an EIS. Early scoping is intended to generate public and agency review and comments on the scope of a planning effort within a defined transportation corridor, which helps the agency to determine which alignment variations should receive more focused study and project development to streamline the NEPA process. Early scoping can streamline the NEPA process, but also firmly links transportation planning and NEPA; and allows the public and interested agencies the opportunity to review and provide comments on the results of the planning activities and studies that inform the NEPA process. Early scoping for the Clifton Corridor Transit Initiative is being conducted in accordance with the Council on Environmental Quality's (CEQ) and FTA's regulations and guidance for implementing NEPA (40 CFR 1501.2 through 1501.8 and through 23 CFR 771.111), which encourage federal agencies to initiate NEPA early in their planning processes. Early scoping begins as soon as there is enough information to describe the proposal so that the public and relevant agencies can participate effectively. This is particularly useful in situations when a proposed action involves a broadly defined corridor with an array of possible transit investment alternatives. This early scoping notice invites public and agency involvement with the ongoing supplementary planning activities and studies for the Clifton Corridor, including review of the (a) purpose and need, (b) the proposed alternatives, and (c) the potential environmental, transportation, and community impacts and benefits to consider during the NEPA process.

Purpose and Need for the Project

The purpose of the proposed project is to provide a high capacity, fixed-guideway transit service to the Clifton Corridor in a manner that increases the reliability and frequency of existing transit services to and within the corridor; improves access and connectivity within the Clifton Corridor; and provides alternative travel options in the event of emergencies that impair roadway travel within the corridor.

The proposed transit investment would improve accessibility, travel time reliability, and economic development by providing high-capacity transit services for commuters accessing activity centers within the Clifton Corridor and the greater Atlanta region.

The primary needs for the Clifton Corridor Transit Initiative are listed below and are supported by the existing conditions in the corridor and broader Atlanta region:

- Provide high-capacity transit to a major regional population and employment center
- Address the need for reliable and frequent transit
- Improve access and connectivity within the Clifton Corridor.

Project Description

A high-capacity, fixed-guideway transit within a corridor extending from the Lindbergh Center in the City of Atlanta, Fulton County, GA to the City of Decatur in DeKalb County, GA. Potential high-capacity, fixed-guideway alternatives would improve transit linkages and coverage within the study corridor, providing high-capacity transit and regional connectivity to one of the

metro area's major regional jobs corridors that includes the Centers for Disease Control and Prevention (CDC), Emory University and Hospital, the Atlanta Veterans Affairs (VA) Medical Center, Emory Decatur Hospital, and several clusters of growing multi-family residential, office, and commercial centers. The project would enhance mobility and accessibility to and within the study corridor by providing a more robust transit network that offers an alternative to automobile travel and would link to existing heavy rail transit lines, with the potential to connect to other planned regional transit expansion projects. The current study evaluates transit modal alternatives that would operate in or adjacent to the CSX Transportation freight rail corridor from the Lindbergh Center MARTA station area to a point near Belt Junction at the Emory-Clairmont Campus in DeKalb County. Transit service would continue east along either: (a) North Decatur Road, DeKalb Industrial Way, N Arcadia Way and E Ponce de Leon Avenue to the Avondale MARTA Station; or (b) continue along Clairemont Avenue to the Decatur MARTA Station.

Project Context and History

The Clifton Corridor Transit Initiative was initiated by MARTA in 2009, in cooperation with the Clifton Corridor Transportation Management Association (CCTMA), to identify and select a transit solution that would provide access to the CDC and Emory University and Hospital Area. An initial alternatives analysis study evaluated several alignment and transit mode alternatives and resulted in a Locally Preferred Alternative (LPA) that was adopted by the MARTA Board of Directors in 2012. Since that time, MARTA has evaluated an extensive number of additional alternatives to maximize operational efficiency and ridership potential, reduce project costs, and reduce environmental and community impacts in a highly complex study area with limited right-of-way (ROW), freight rail, established historic and residential areas, and a rapid pace of real estate development.

Next Steps

FTA and MARTA invite comments on all planning activities and developments, which include, but are not limited to, the Purpose and Need of the Project, the Project study area, potential impacts, and potential alternatives. At the end of the alternatives analysis process, FTA and MARTA anticipate identifying a preferred mode and corridor for further evaluation during the NEPA process. The classification of the NEPA documentation (Categorical Exclusion, Environmental Assessment, or Environmental Impact Statement) will be determined by FTA at the end of the alternatives analysis. If the preferred mode and alignment involve the potential for significant environmental impacts, an EIS may be required. If an EIS is required, a Notice of Intent to Prepare an EIS will be published in the **Federal Register** by FTA, and the public and interested agencies will have the opportunity to participate in a review and comment period on the scope of the EIS.

Authority: 49 CFR 622.101, 23 CFR 771.111, and 40 CFR 1501.7.

Yvette Taylor,

Regional Administrator.

[FR Doc. 2022–13947 Filed 6–29–22; 8:45 am]

BILLING CODE 4910–57–P

DEPARTMENT OF THE TREASURY

Office of the Comptroller of the Currency

Agency Information Collection Activities: Information Collection Revision; Comment Request; Annual Stress Test Rule

AGENCY: Office of the Comptroller of the Currency (OCC), Treasury.

ACTION: Notice and request for comment.

SUMMARY: The OCC, as part of its continuing effort to reduce paperwork and respondent burden, invites the general public and other Federal agencies to take this opportunity to comment on a continuing information collection as required by the Paperwork Reduction Act of 1995 (PRA). An agency may not conduct or sponsor, and respondents are not required to respond to, an information collection unless it displays a currently valid Office of Management and Budget (OMB) control number. The OCC is soliciting comment concerning the renewal of its information collection titled ''Annual Stress Test Rule.''

DATES: Comments must be submitted on or before August 29, 2022.

ADDRESSES: Commenters are encouraged to submit comments by email, if possible. You may submit comments by any of the following methods:

- *Email: prainfo@occ.treas.gov.*
- *Mail:* Chief Counsel's Office, Attention: Comment Processing, Office of the Comptroller of the Currency, Attention: 1557–0343, 400 7th Street SW, Suite 3E–218, Washington, DC 20219.
- *Hand Delivery/Courier:* 400 7th Street SW, Suite 3E–218, Washington, DC 20219.
- *Fax:* (571) 465–4326.

Instructions: You must include ''OCC'' as the agency name and ''1557–0343'' in your comment. In general, the OCC will publish comments on *www.reginfo.gov* without change, including any business or personal information provided, such as name and address information, email addresses, or phone numbers. Comments received, including attachments and other supporting materials, are part of the public record and subject to public disclosure. Do not include any information in your comment or supporting materials that you consider confidential or inappropriate for public disclosure.

Following the close of this notice's 60-day comment period, the OCC will publish a second notice with a 30-day comment period. You may review comments and other related materials that pertain to this information collection beginning on the date of publication of the second notice for this collection by the method set forth in the next bullet.

- *Viewing Comments Electronically:* Go to *www.reginfo.gov.* Hover over the ''Information Collection Review'' drop down menu, and click on ''Information Collection Review.'' From the ''Currently under Review'' drop-down menu, select ''Department of Treasury'' and then click ''submit.'' This information collection can be located by searching by OMB control number ''1557–0343'' or ''Annual Stress Test Rule.'' Upon finding the appropriate information collection, click on the related ''ICR Reference Number.'' On the next screen, select ''View Supporting Statement and Other Documents'' and then click on the link to any comment listed at the bottom of the screen.
- For assistance in navigating *www.reginfo.gov,* please contact the Regulatory Information Service Center at (202) 482–7340.

FOR FURTHER INFORMATION CONTACT: Shaquita Merritt, OCC Clearance Officer, (202) 649–5490, Chief Counsel's Office, Office of the Comptroller of the Currency, 400 7th Street SW, Washington, DC 20219. If you are deaf, hard of hearing, or have a speech disability, please dial 7–1–1 to access telecommunications relay services.

SUPPLEMENTARY INFORMATION: Under the PRA (44 U.S.C. 3501 *et seq.*), Federal agencies must obtain approval from the OMB for each collection of information that they conduct or sponsor. ''Collection of information'' is defined

in 44 U.S.C. 3502(3) and 5 CFR 1320.3(c) to include agency requests or requirements that members of the public submit reports, keep records, or disclose information to a third party. Section 3506(c)(2)(A) of title 44 requires Federal agencies to provide a 60-day notice in the **Federal Register** concerning each proposed collection of information, including each proposed revision of an existing collection of information, before submitting the collection to OMB for approval. To comply with this requirement, the OCC is publishing this notice.

Title: Annual Stress Test Rule.

OMB Control No.: 1557–0343.

Type of Review: Regular review.

Description: The annual stress test rule [1] implemented Section 165(i) of the Dodd-Frank Wall Street Reform and Consumer Protection Act [2] (''Dodd-Frank Act'') which requires certain companies to conduct annual stress tests. National banks and Federal savings associations with total consolidated assets of more than $10 billion were required to conduct annual stress tests and comply with reporting and disclosure requirements under the rule. The reporting templates for institutions with total consolidated assets of over $50 billion were finalized in 2012.[3]

Section 165(i)(2) of the Dodd-Frank Wall Street Reform and Consumer Protection Act (Dodd-Frank Act) required certain financial companies, including national banks and Federal savings associations, to conduct annual stress tests [4] and requires the primary financial regulatory agency [5] of those financial companies to issue regulations implementing the stress test requirements.[6]

Under section 165(i)(2), a covered institution was required to submit to the Board of Governors of the Federal Reserve System (Board) and to its primary financial regulatory agency a report at such time, in such form, and containing such information as the primary financial regulatory agency may require.[7]

The Economic Growth, Regulatory Relief, and Consumer Protection Act (EGRRCPA), enacted on May 24, 2018, amended certain aspects of the company-run stress testing requirement in section 165(i)(2) of the Dodd-Frank Act.[8] Specifically, section 401 of EGRRCPA raises the minimum asset threshold for financial companies covered by the company-run stress testing requirement from $10 billion to $250 billion in total consolidated assets; revises the requirement for banks to conduct stress tests ''annually'' and instead requires them to conduct stress tests ''periodically''; and no longer requires the OCC to provide an ''adverse'' stress-testing scenario, thus reducing the number of required stress test scenarios from three to two.

The OCC uses the information to assess the reasonableness of the stress test results and provide forward-looking information to the OCC regarding a covered institution's capital adequacy. The OCC also may use the results of the stress tests to determine whether additional analytical techniques and exercises could be appropriate to identify, measure, and monitor risks at the covered institution. The stress test results support ongoing improvement in a covered institution's stress testing practices with respect to its internal assessments of capital adequacy and overall capital planning.

Under 12 CFR 46.6(c), each covered institution is required to establish and maintain a system of controls, oversight, and documentation, including policies and procedures, describing the covered institution's stress test practices and methodologies, and processes for validating and updating the covered institution's stress test practices. The board of directors of the covered institution must approve and review these policies at least annually. Section 46.7(a) requires each covered institution to report the results of their stress tests to the OCC annually. Section 46.8(a) requires that a covered institution publish a summary of the results of its annual stress tests on its website or in any other forum that is reasonably accessible to the public.

The 2019 increase in the applicability threshold for these requirements [9] reduced the estimated number of respondents. In addition, the frequency of these reporting, recordkeeping, and disclosure requirements for some institutions were decreased to biennial.

Affected Public: Businesses or other for-profit.

Estimated Annual Burden: 6,240 Hours.

Frequency of Response: Annual.

Comments: Comments submitted in response to this notice will be summarized and included in the request for OMB approval. All comments will become a matter of public record. Comments are invited on:

(a) Whether the collections of information are necessary for the proper performance of the functions of the OCC, including whether the information has practical utility;

(b) The accuracy of the OCC's estimates of the information collection burden;

(c) Ways to enhance the quality, utility, and clarity of the information to be collected;

(d) Ways to minimize the burden of the collection on respondents, including through the use of automated collection techniques or other forms of information technology; and

(e) Estimates of capital or start-up costs and costs of operation, maintenance, and purchase of services to provide information.

Theodore J. Dowd,

Deputy Chief Counsel, Office of the Comptroller of the Currency.

[FR Doc. 2022–13941 Filed 6–29–22; 8:45 am]

BILLING CODE 4810–33–P

[1] October 9, 2012—Final Rule (77 FR 61238)

[2] Dodd-Frank Wall Street Reform and Consumer Protection Act, Public Law 111–203, 124 Stat. 1376 (2010).

[3] 77 FR 49485 (August 16, 2012); 77 FR 66663 (November 6, 2012).

[4] 12 U.S.C. 5365(i)(2)(A).

[5] 12 U.S.C. 5301(12).

[6] 12 U.S.C. 5365(i)(2)(C).

[7] 12 U.S.C. 5365(i)(2)(B).

[8] Public Law 115–174, 132 Stat. 1296–1368 (2018).

[9] 84 FR 54472 (October 10, 2019).

DEPARTMENT OF VETERANS AFFAIRS

[OMB Control No. 2900–0003]

Agency Information Collection Activity Under OMB Review: Application for Burial Benefits (Under 38 U.S.C. Chapter 23)

AGENCY: Veterans Benefits Administration, Department of Veterans Affairs.

ACTION: Notice.

SUMMARY: In compliance with the Paperwork Reduction Act (PRA) of 1995, this notice announces that the Veterans Benefits Administration (VBA), Department of Veterans Affairs, will submit the collection of information abstracted below to the Office of Management and Budget (OMB) for review and comment. The PRA submission describes the nature of the information collection and its expected cost and burden and it includes the actual data collection instrument.

DATES: Written comments and recommendations for the proposed information collection should be sent within 30 days of publication of this notice to *www.reginfo.gov/public/do/PRAMain.* Find this particular information collection by selecting ''Currently under 30-day Review—Open

for Public Comments'' or by using the search function. Refer to ''OMB Control No. 2900–0003.

FOR FURTHER INFORMATION CONTACT: Maribel Aponte, Office of Enterprise and Integration, Data Governance Analytics (008), 1717 H Street NW, Washington, DC 20006, (202) 266–4688 or email *maribel.aponte@va.gov.* Please refer to ''OMB Control No. 2900–0003'' in any correspondence.

SUPPLEMENTARY INFORMATION:

Authority: 38 U.S.C. 2302, 2303, 2304, 2307, and 2308.

Title: Application for Burial Benefits (Under 38 U.S.C. chapter 23), VA Form 21P–530EZ.

OMB Control Number: 2900–0003.

Type of Review: Revision of a currently approved collection.

Abstract: The major use of the form is to determine a claimant's eligibility to for monetary burial benefits, including the burial allowance, plot or interment allowance, and transportation reimbursement for a deceased Veteran.

The respondent burden has increased due to the estimated number of receivables averaged over the past year.

VA Form 21P–530EZ has been updated as follows:

- Updated instructions to reflect the regulation change and updates to the form
- Split Section I into Section I—Veteran's Information and Section II—Claimant's Information
- Moved Veteran's Information Questions to Section I
- Changed Section Titles to Section III—Veteran's Service Information; Section IV—Information Regarding Final Resting Place; Section V—Claim for Burial Allowance; Section VI—Claim for Plot and/or Transportation Allowance
- Question 18—added Tribal trust land, name of cemetery or tribal trust land and zip code
- Question 20A—removed VA Hospitalization Death/Amount paid from (now covered under non-service-connected burial allowance)
- Moved Question 20A to Section VI (now question 23)

An agency may not conduct or sponsor, and a person is not required to respond to a collection of information unless it displays a currently valid OMB control number. The **Federal Register** Notice with a 60-day comment period soliciting comments on this collection of information was published at 87 FR 23325 on April 19, 2022, pages 23325–23326.

Affected Public: Individuals or Households.

Estimated Annual Burden: 64,223.50.

Estimated Average Burden per Respondent: 30 minutes.

Frequency of Response: On occasion.

Estimated Number of Respondents: 128,447.

By direction of the Secretary.

Dorothy Glasgow,

VA PRA Clearance Officer, (Alt.) Office of Enterprise and Integration, Data Governance Analytics, Department of Veterans Affairs.

[FR Doc. 2022–14019 Filed 6–29–22; 8:45 am]

BILLING CODE 8320–01–P

DEPARTMENT OF VETERANS AFFAIRS

[OMB Control No. 2900–0718]

Agency Information Collection Activity: Yellow Ribbon Program Agreement and Principles of Excellence for Educational Institutions

AGENCY: Veterans Benefits Administration, Department of Veterans Affairs.

ACTION: Notice.

SUMMARY: Veterans Benefits Administration, Department of Veterans Affairs (VA), is announcing an opportunity for public comment on the proposed collection of certain information by the agency. Under the Paperwork Reduction Act (PRA) of 1995, Federal agencies are required to publish notice in the **Federal Register** concerning each proposed collection of information, including each proposed new collection, and allow 60 days for public comment in response to the notice.

DATES: Written comments and recommendations on the proposed collection of information should be received on or before August 29, 2022.

ADDRESSES: Submit written comments on the collection of information through Federal Docket Management System (FDMS) at *www.Regulations.gov* or to Nancy J. Kessinger, Veterans Benefits Administration (20M33), Department of Veterans Affairs, 810 Vermont Avenue NW, Washington, DC 20420 or email to *nancy.kessinger@va.gov.* Please refer to ''OMB Control No. 2900–0718'' in any correspondence. During the comment period, comments may be viewed online through FDMS.

FOR FURTHER INFORMATION CONTACT: Maribel Aponte, Office of Enterprise and Integration, Data Governance Analytics (008), 1717 H Street NW, Washington, DC 20006, (202) 266–4688 or email *maribel.aponte@va.gov.* Please refer to ''OMB Control No. 2900–0718 in any correspondence.

SUPPLEMENTARY INFORMATION: Under the PRA of 1995, Federal agencies must obtain approval from the Office of Management and Budget (OMB) for each collection of information they conduct or sponsor. This request for comment is being made pursuant to Section 3506(c)(2)(A) of the PRA.

With respect to the following collection of information, VBA invites comments on: (1) whether the proposed collection of information is necessary for the proper performance of VBA's functions, including whether the information will have practical utility; (2) the accuracy of VBA's estimate of the burden of the proposed collection of information; (3) ways to enhance the quality, utility, and clarity of the information to be collected; and (4) ways to minimize the burden of the collection of information on respondents, including through the use of automated collection techniques or the use of other forms of information technology.

Authority: Title 38 United States Code (U.S.C.) 3317 and Executive Order 13607.

Title: Yellow Ribbon Program Agreement and Principles of Excellence for Educational Institutions, VA Form 22–0839 and VA Form 22–10275.

OMB Control Number: 2900–0718.

Type of Review: Reinstatement with change.

Abstract: These forms will be used to satisfy requirements as outlined. VA Form 22–0839, Yellow Ribbon Program Agreement, is sanctioned by Public Law 110–252 which authorized the Department of Veterans Affairs (VA) to administer an education benefit program known as the Post-9/11 GI Bill. Section 3317 of title 38, United States Code, established the Yellow Ribbon G.I. Enhancement Program, referred to as the ''Yellow Ribbon Program''. The Yellow Ribbon Program allows institutions of higher Learning (IHLs) to voluntarily enter into an agreement with VA to commit to contributing towards the outstanding amount of tuition and fees not otherwise covered under the Post-9/11 GI Bill. VA will match the contribution made by the IHL not to exceed fifty percent of the total outstanding amount of tuition and fees. IHLs wishing to participate in the Yellow Ribbon Program are required to submit the Yellow Ribbon Program Agreement (VA Form 22–0839) indicating the maximum number of students that can receive this additional benefit under the program, the maximum contribution towards outstanding tuition and fees for each student based on student status (*i.e.,* undergraduate, graduate, doctoral) or

sub-element (*i.e.,* college or professional school). Title 38 U.S.C 3317 necessitates this collection of information. VA Form 22–10275, Principles of Excellence for Educational Institution is authorized by Executive Order 13607. Participating schools commit to voluntarily follow the guidelines outlined in Executive Order 13607 intended to promote transparency and student success. Currently, the VA Form 22–0839 includes the Principles of Excellence (POE) application, but because only degree granting schools can participate in the Yellow Ribbon Program, non-degree granting schools are disadvantaged. Further the Yellow Ribbon Program Participation is only solicited during an annual 'open season' from March to May, POE participation is further restricted. VA Form 22–10275 will be made available year-round. Executive Order 13607 necessitates this collection of information.

Affected Public: Individuals and households.

Estimated Annual Burden: 25,928 hours.

Estimated Average Burden per Respondent: 14 hours.

Frequency of Response: Once per form type.

Estimated Number of Respondents: 1,852.

By direction of the Secretary.

Maribel Aponte,

VA PRA Clearance Officer, Office of Enterprise and Integration/Data Governance Analytics, Department of Veterans Affairs.

[FR Doc. 2022–14017 Filed 6–29–22; 8:45 am]

BILLING CODE 8320–01–P

FEDERAL REGISTER

Vol. 87 Thursday,

No. 125 June 30, 2022

Part II

Department of Energy

10 CFR Parts 429 and 431

Energy Conservation Program: Test Procedure for Commercial Refrigerators, Refrigerator-Freezers, and Freezers; Proposed Rule

DEPARTMENT OF ENERGY

10 CFR Parts 429 and 431

[EERE–2017–BT–TP–0008]

RIN 1904–AD83

Energy Conservation Program: Test Procedure for Commercial Refrigerators, Refrigerator-Freezers, and Freezers

AGENCY: Office of Energy Efficiency and Renewable Energy, Department of Energy.

ACTION: Notice of proposed rulemaking and announcement of public meeting.

SUMMARY: The U.S. Department of Energy (''DOE'') proposes to amend the test procedures for commercial refrigerators, refrigerator-freezers, and freezers to reference the latest versions of the applicable industry standards. DOE also proposes to establish definitions and test procedures for new equipment categories, adopt test procedures consistent with recently published waivers and interim waivers, establish product-specific enforcement provisions, allow for volume determinations based on computer aided designs, specify a sampling plan for volume and total display area, and adopt additional clarifying amendments. DOE is seeking comment from interested parties on the proposal.

DATES: DOE will accept comments, data, and information regarding this proposal no later than August 29, 2022. See section [V], ''Public Participation,'' for details. DOE will hold a webinar on Monday, August 1, 2022, from 1:00 p.m. to 4:00 p.m. See section V, ''Public Participation,'' for webinar registration information, participant instructions, and information about the capabilities available to webinar participants.

ADDRESSES: Interested persons are encouraged to submit comments using the Federal eRulemaking Portal at *www.regulations.gov* under docket number EERE–2017–BT–TP–0008. Follow the instructions for submitting comments. Alternatively, interested persons may submit comments, identified by docket number EERE–2017–BT–TP–0008, by any of the following methods:

(1) *Email: CRE2017TP0008@ee.doe.gov.* Include the docket number EERE–2017–BT–TP–0008 in the subject line of the message.

(2) *Postal Mail:* Appliance and Equipment Standards Program, U.S. Department of Energy, Building Technologies Office, Mailstop EE–5B, 1000 Independence Avenue SW, Washington, DC 20585–0121. Telephone: (202) 287–1445. If possible, please submit all items on a compact disc (''CD''), in which case it is not necessary to include printed copies.

(3) *Hand Delivery/Courier:* Appliance and Equipment Standards Program, U.S. Department of Energy, Building Technologies Office, 950 L'Enfant Plaza SW, 6th Floor, Washington, DC 20024. Telephone: (202) 287–1445. If possible, please submit all items on a CD, in which case it is not necessary to include printed copies.

No telefacsimiles (''faxes'') will be accepted. For detailed instructions on submitting comments and additional information on this process, see section V of this document.

Docket: The docket, which includes **Federal Register** notices, public meeting attendee lists and transcripts (if a public meeting is held), comments, and other supporting documents/materials, is available for review at *www.regulations.gov.* All documents in the docket are listed in the *www.regulations.gov* index. However, some documents listed in the index, such as those containing information that is exempt from public disclosure, may not be publicly available.

The docket web page can be found at *www.regulations.gov/docket/EERE-2017-BT-TP-0008.* The docket web page contains instructions on how to access all documents, including public comments, in the docket. See section V for information on how to submit comments through *www.regulations.gov.*

FOR FURTHER INFORMATION CONTACT:

Dr. Stephanie Johnson, U.S. Department of Energy, Office of Energy Efficiency and Renewable Energy, Building Technologies Office, EE–2J, 1000 Independence Avenue SW, Washington, DC 20585–0121. Telephone: (202) 287–1943. Email *ApplianceStandardsQuestions@ee.doe.gov.*

Mr. Peter Cochran, U.S. Department of Energy, Office of the General Counsel, GC–33, 1000 Independence Avenue SW, Washington, DC 20585–0121. Telephone: (202) 586–9496. Email: *Peter.Cochran@Hq.Doe.Gov.*

For further information on how to submit a comment, review other public comments and the docket, or participate in a public meeting (if one is held), contact the Appliance and Equipment Standards Program staff at (202) 287–1445 or by email: *ApplianceStandardsQuestions@ee.doe.gov.*

SUPPLEMENTARY INFORMATION:

DOE proposes to maintain previously approved incorporations by reference and to incorporate by reference the following industry standards into 10 CFR part 431:

Air-Conditioning, Heating, and Refrigeration Institute (''AHRI'') Standard 1200, ''Performance Rating of Commercial Refrigerated Display Merchandisers and Storage Cabinets,'' draft version submitted to DOE with expected publication in 2022 (''AHRI 1200–202X'').

American National Standards Institute (''ANSI'')/AHRI Standard 1320, ''Performance Rating of Commercial Refrigerated Display Merchandisers and Storage Cabinets for Use With Secondary Refrigerants,'' approved 2011 (''AHRI 1320–2011'').

ANSI/American Society of Heating, Refrigerating, and Air-Conditioning Engineers (''ASHRAE'') Standard 72, ''Method of Testing Open and Closed Commercial Refrigerators and Freezers,'' second public review version with expected publication in 2022 (''ASHRAE 72–2018R'').

ASTM, International (''ASTM'') F2143–16, ''Standard Test Method for Performance of Refrigerated Buffet and Preparation Tables,'' approved 2016 (''ASTM F2143–16'').

Copies of the draft version of AHRI 1200–202X can be obtained by going to *www.regulations.gov/docket/EERE-2017-BT-TP-0008.* Copies of AHRI 1320–2011 can be obtained by going to *ahri.net.org/search-standards.* Copies of the second public review version of ASHRAE 72–2018R can be obtained by going to *www.regulations.gov/docket/EERE-2017-BT-TP-0008.* Copies of ASTM F2143–16 can be purchased at *www.astm.org/f2143-16.html.*

For a further discussion of these standards, see section IV.M of this document.

Table of Contents

I. Authority and Background
A. Authority
B. Background
C. Deviation From Appendix A
II. Synopsis of the Notice of Proposed Rulemaking
III. Discussion
A. Scope and Definitions
1. Ice-Cream Freezers
2. High-Temperature CRE
3. Convertible Equipment
B. Updates to Industry Test Standards
1. AHRI 1200
2. ASHRAE 72
3. Secondary Coolants
4. International Standards Development
C. Test Conditions for Specific CRE Categories
1. Salad Bars, Buffet Tables and Refrigerated Preparation Tables
2. Pull-Down Temperature Applications
3. Blast Chillers and Blast Freezers
4. Chef Bases and Griddle Stands

5. Mobile Refrigerated Cabinets
6. Additional Covered Equipment
D. Harmonization of Efficiency Standards and Testing With NSF 7–2019 Food Safety
E. Dedicated Remote Condensing Units
F. Test Procedure Clarifications and Modifications
1. Defrost Cycles
2. Total Display Area
G. Alternative Refrigerants
H. Certification of Compartment Volume
I. Test Procedure Waivers
J. Enforcement Provisions
K. Lowest Application Product Temperature
L. Removal of Obsolete Provisions
M. Additional Topics Raised in Comments From Interested Parties
1. Refrigerant Leakages and Life Cycle Performance
2. Refrigerant Collection for Remote Testing
3. Energy Conservation Standards
N. Sampling Plan
O. Test Procedure Costs and Harmonization
1. Test Procedure Costs and Impact
2. Harmonization With Industry Standards
P. Compliance Date and Waivers
IV. Procedural Issues and Regulatory Review
A. Review Under Executive Orders 12866 and 13563
B. Review Under the Regulatory Flexibility Act
1. Description of Reasons Why Action Is Being Considered
2. Objectives of, and Legal Basis for, Rule
3. Description and Estimate of Small Entities Regulated
4. Description and Estimate of Compliance Requirements
5. Identification of Duplication, Overlap, and Conflict With Other Rules and Regulations
6. A Description of Significant Alternatives to the Rule
C. Review Under the Paperwork Reduction Act of 1995
D. Review Under the National Environmental Policy Act of 1969
E. Review Under Executive Order 13132
F. Review Under Executive Order 12988
G. Review Under the Unfunded Mandates Reform Act of 1995
H. Review Under the Treasury and General Government Appropriations Act, 1999
I. Review Under Executive Order 12630
J. Review Under Treasury and General Government Appropriations Act, 2001
K. Review Under Executive Order 13211
L. Review Under Section 32 of the Federal Energy Administration Act of 1974
M. Description of Materials Incorporated by Reference
V. Public Participation
A. Participation in the Webinar
B. Procedure for Submitting Prepared General Statements for Distribution
C. Conduct of the Webinar
D. Submission of Comments
E. Issues on Which DOE Seeks Comment
VI. Approval of the Office of the Secretary

I. Authority and Background

Commercial refrigerators, refrigerator-freezers, and freezers (collectively, commercial refrigeration equipment, or ''CRE'') are included in the list of ''covered equipment'' for which DOE is authorized to establish and amend energy conservation standards and test procedures. (42 U.S.C. 6311)(1)(E)) DOE's energy conservation standards and test procedures for CRE are currently prescribed at subpart C of part 431 of title 10 of the Code of Federal Regulations (''CFR''). The following sections discuss DOE's authority to establish test procedures for CRE and relevant background information regarding DOE's consideration of test procedures for this equipment.

A. Authority

The Energy Policy and Conservation Act, as amended (''EPCA''),[1] authorizes DOE to regulate the energy efficiency of a number of consumer products and certain industrial equipment. (42 U.S.C. 6291–6317) Title III, Part C[2] of EPCA, added by Public Law 95–619, Title IV, section 441(a), established the Energy Conservation Program for Certain Industrial Equipment, which sets forth a variety of provisions designed to improve energy efficiency. This equipment includes CRE, the subject of this document. (42 U.S.C. 6311 (1)(E))

The energy conservation program under EPCA consists essentially of four parts: (1) testing, (2) labeling, (3) Federal energy conservation standards, and (4) certification and enforcement procedures. Relevant provisions of EPCA specifically include definitions (42 U.S.C. 6311), test procedures (42 U.S.C. 6314), labeling provisions (42 U.S.C. 6315), energy conservation standards (42 U.S.C. 6313), and the authority to require information and reports from manufacturers (42 U.S.C. 6316; 42 U.S.C. 6296).

The Federal testing requirements consist of test procedures that manufacturers of covered equipment must use as the basis for: (1) certifying to DOE that their equipment complies with the applicable energy conservation standards adopted pursuant to EPCA (42 U.S.C. 6316(a); 42 U.S.C. 6295(s)), and (2) making representations about the efficiency of that equipment (42 U.S.C. 6314(d)). Similarly, DOE must use these test procedures to determine whether the equipment complies with relevant standards promulgated under EPCA. (42 U.S.C. 6316(a); 42 U.S.C. 6295(s))

Federal energy efficiency requirements for covered equipment established under EPCA generally supersede State laws and regulations concerning energy conservation testing, labeling, and standards. (42 U.S.C. 6316(a) and 42 U.S.C. 6316(b); 42 U.S.C. 6297) DOE may, however, grant waivers of Federal preemption for particular State laws or regulations, in accordance with the procedures and other provisions of EPCA. (42 U.S.C. 6316(b)(2)(D))

Under 42 U.S.C. 6314, EPCA sets forth the criteria and procedures DOE must follow when prescribing or amending test procedures for covered equipment. EPCA requires that any test procedures prescribed or amended under this section must be reasonably designed to produce test results which reflect energy efficiency, energy use or estimated annual operating cost of a given type of covered equipment during a representative average use cycle and requires that test procedures not be unduly burdensome to conduct. (42 U.S.C. 6314(a)(2))

With respect to CRE, EPCA requires DOE to use the test procedures determined by the Secretary to be generally accepted industry standards, or industry standards developed or recognized by the American Society of Heating, Refrigerating, and Air-Conditioning Engineers (''ASHRAE'') or American National Standards Institute (''ANSI''). (42 U.S.C. 6314(a)(6)(A)(i)) With regard to self-contained CRE to which statutory standards are applicable, the required initial test procedure is the ASHRAE 117 test procedure in effect on January 1, 2005. (42 U.S.C. 6314(a)(6)(A)(ii)) Additionally, EPCA requires that if ANSI 117 is amended, the Secretary shall, by rule, amend the test procedure for the product as necessary to ensure that the test procedure is consistent with the amended ASHRAE 117 test procedure, unless the Secretary makes a determination, by rule, and supported by clear and convincing evidence, that to do so would not meet the statutory requirements regarding representativeness and burden. (42 U.S.C. 6314(a)(6)(E)) Finally, EPCA states if a test procedure other than the ASHRAE 117 test procedure is approved by ANSI, DOE must review the relative strengths and weaknesses of the new test procedure relative to the ASHRAE 117 test procedure and adopt one new test procedure for use in the standards program. (42 U.S.C. 6314(a)(6)(F)(i))[3]

[1] All references to EPCA in this document refer to the statute as amended through the Energy Act of 2020, Public Law 116–260 (Dec. 27, 2020), which reflect the last statutory amendments that impact Parts A and A–1 of EPCA.

[2] For editorial reasons, upon codification in the U.S. Code, Part C was redesignated Part A–1.

[3] In 2005, ASHRAE combined Standard 72–1998, ''Method of Testing Open Refrigerators,'' and

Continued

EPCA also requires that, at least once every 7 years, DOE evaluate test procedures for each type of covered equipment, including CRE, to determine whether amended test procedures would more accurately or fully comply with the requirements for the test procedures to not be unduly burdensome to conduct and be reasonably designed to produce test results that reflect energy efficiency, energy use, and estimated operating costs during a representative average use cycle. (42 U.S.C. 6314(a)(1))

In addition, if the Secretary determines that a test procedure amendment is warranted, the Secretary must publish proposed test procedures in the **Federal Register**, and afford interested persons an opportunity (of not less than 45 days' duration) to present oral and written data, views, and arguments on the proposed test procedures. (42 U.S.C. 6314(b)) If DOE determines that test procedure revisions are not appropriate, DOE must publish its determination not to amend the test procedures. DOE is publishing this notice of proposed rulemaking (''NOPR'') in satisfaction of the 7-year review requirement specified in EPCA. (42 U.S.C. 6314(a)(1)(A)(ii))

B. Background

DOE's current test procedure for CRE appears at 10 CFR part 431, subpart C, appendix B (''Amended Uniform Test Method for the Measurement of Energy Consumption of Commercial Refrigerators, Freezers, and Refrigerator-Freezers'').

DOE last amended the test procedure for CRE in a final rule published on April 24, 2014. (''April 2014 Final Rule''). 79 FR 22277. Specifically, DOE clarified certain terms, procedures, and compliance dates to improve repeatability and provide additional detail compared to the prior version of the test procedure. DOE noted that the amendments in the April 2014 Final Rule would not affect the measured energy use of CRE as measured under the prior version of the test procedure. 79 FR 22277, 22280–22281.

The test procedure incorporates by reference the following industry standards: (1) AHRI Standard 1200 (I–P)–2010, ''Performance Rating of Commercial Refrigerated Display Merchandisers and Storage Cabinets'' (''AHRI 1200–2010''); (2) ASHRAE Standard 72–2005, ''Method of Testing Commercial Refrigerators and Freezers'', which was approved by ANSI on July 29, 2005 (''ASHRAE 72–2005''); and (3) ANSI/Association of Home Appliances (''AHAM'') Standard HRF–1–2008, ''Energy, Performance, and Capacity of Household Refrigerators, Refrigerator-Freezers, and Freezers'' (''AHAM HRF–1–2008'') for determining refrigerated volumes for CRE.

On June 11, 2021, DOE published in the **Federal Register** an early assessment request for information (''June 2021 RFI'') seeking comments on the existing DOE test procedure for CRE. 86 FR 31182. In the June 2021 RFI, DOE requested comments, information, and data regarding a number of issues, including (1) scope and definitions, (2) updates to industry standards, (3) test conditions for specific CRE categories, (4) harmonization with food safety standards, (5) remote condensing units, (6) test procedure clarifications, (7) alternative refrigerants, (8) compartment volume certification, and (9) test procedure waivers.

DOE received comments in response to the June 2021 RFI from the interested parties listed in Table I.1.

TABLE I.1—LIST OF COMMENTERS WITH WRITTEN COMMENTS RECEIVED IN RESPONSE TO JUNE 2021 RFI

Commenter(s)	Reference in this NOPR	Commenter type
ITW-Food Equipment Group, LLC	ITW	Manufacturer.
Air-Conditioning, Heating, and Refrigeration Institute	AHRI	Trade Association.
True Manufacturing Company, Inc	True	Manufacturer.
Northwest Energy Efficiency Alliance	NEEA	Efficiency Organization.
Continental Refrigerator	Continental	Manufacturer.
Institute for Governance & Sustainable Development	IGSD	Efficiency Organization.
Pacific Gas and Electric Company, Southern California Edison, and San Diego Gas & Electric; collectively, the California Investor-Owned Utilities.	CA IOUs	Energy Utilities.
Arneg USA	Arneg	Manufacturer.
Hoshizaki America, Inc	Hoshizaki	Manufacturer.
Hussmann Corporation	Hussmann	Manufacturer.
Appliance Standards Awareness Program, American Council for an Energy-Efficient Economy, and Natural Resource Defense Council.	Joint Commenters	Efficiency Organizations.
Aarin King	King	Individual.

A parenthetical reference at the end of a comment quotation or paraphrase provides the location of the item in the public record.[4]

C. Deviation From Appendix A

In accordance with section 3(a) of 10 CFR part 430, subpart C, appendix A (''appendix A''), applicable to CRE under 10 CFR 431.4, DOE notes that it is deviating from the provision in appendix A regarding the pre-NOPR stages for a test procedure rulemaking. Section 8(b) of appendix A states that if DOE determines that it is appropriate to continue the test procedure rulemaking after the early assessment process, it will provide further opportunities for early public input through **Federal Register** documents, including notices of data availability and/or requests for information. DOE is opting to deviate from this provision due to the substantial feedback and information supplied by commenters in response to the June 2021 RFI.

As discussed in section I.B of this NOPR, the June 2021 RFI requested submission of comments, data, and information pertinent to test procedures

Standard 117–2002 and published the test method as ASHRAE Standard 72–2005, ''Method of Testing Commercial Refrigerators and Freezers,'' which was approved by ANSI on July 29, 2005.

[4] The parenthetical reference provides a reference for information located in the docket of DOE's rulemaking to develop test procedures for CRE. (Docket No. EERE–2017–BT–TP–0008, which is maintained at *www.regulations.gov*). The references are arranged as follows: (commenter name, comment docket ID number, page of that document).

for CRE. In response to the June 2021 RFI, stakeholders provided substantial comments and information, which DOE has found sufficient to identify the need to modify the test procedures for CRE. Additionally, DOE does not expect that further opportunities for early public input would result in additional substantive comments from interested parties. This NOPR discusses the comments received in response to the June 2021 RFI and considered in forming DOE's proposals to amend the CRE test procedure.

II. Synopsis of the Notice of Proposed Rulemaking

In this NOPR, DOE proposes to update subpart C of 10 CFR part 431 as follows:

(1) Establish new definitions for high-temperature refrigerator, medium-temperature refrigerator, low-temperature freezer, mobile refrigerated cabinet, and amend the definition for ice-cream freezer;

(2) Incorporate by reference the most current versions of industry standards AHRI 1200, ASHRAE 72, and AHRI 1320;

(3) Establish definitions and a new appendix C including test procedures for buffet tables and preparation tables;

(4) Establish definitions and a new appendix D including test procedures for blast chillers and blast freezers;

(5) Amend the definition for chef base or griddle stand;

(6) Specify refrigerant conditions for CRE that use carbon dioxide (''CO_2'') refrigerant;

(7) Allow for certification of compartment volumes based on computer aided design (''CAD'') models;

(8) Incorporate provisions for defrosts and customer order storage cabinets currently specified in waivers and interim waivers;

(9) Adopt product-specific enforcement provisions;

(10) Clarify use of the lowest application product temperature (''LAPT'') provisions;

(11) Remove the obsolete test procedure in appendix A; and

(12) Specify a sampling plan for volume and total display area (''TDA'').

DOE's proposed actions are summarized in Table II.1 compared to the current test procedure as well as the reason for the proposed change.

TABLE II.A—SUMMARY OF CHANGES IN PROPOSED TEST PROCEDURE RELATIVE TO CURRENT TEST PROCEDURE

Current DOE test procedure	Proposed test procedure	Attribution
Defines commercial refrigerator without delineating between units that operate at medium and high temperatures.	Defines high-temperature refrigerator and medium-temperature refrigerator to account for new high-temperature rating point.	Improves representativeness.
Defines ice-cream freezer as a type of commercial freezer.	Defines low-temperature freezer to delineate between ice-cream freezers and other commercial freezers.	Improves representativeness.
Ice-cream freezer definition refers only to ''ice cream''	Ice-cream definition refers more broadly to ''frozen desserts''.	Improves representativeness.
References AHRI 1200–2010 for rating requirements	References AHRI 1200–202X for rating requirements ...	Harmonizes with most recent industry standard.
References ASHRAE 72–2005 for test requirements	References ASHRAE 72–2018R for test requirements ..	Harmonizes with most recent industry standard.
References AHAM HRF–1–2008 for volume measurement.	References AHRI 1200–202X for volume requirements	Harmonizes with most recent industry standard.
Includes a single 38 °F rating point for commercial refrigerators.	Specifies 38 °F rating point for medium-temperature refrigerators and 55 °F rating point for high-temperature refrigerators.	Improves representativeness; harmonizes with industry standard.
Does not specify a method for testing CRE with secondary coolants.	References AHRI 1320–2011 for CRE used with secondary coolants.	Improves representativeness; harmonizes with industry standard.
Does not specify definitions or test procedures for buffet tables and preparation tables.	Defines buffet table and preparation table and establishes test procedures based on ASTM F2143–16.	Improves representativeness; harmonizes with industry standard.
Does not specify definitions or test procedures for blast chillers and blast freezers.	Defines blast chiller and blast freezer and establishes test procedures based on expected industry test method.	Improves representativeness; harmonizes with industry standard.
Chef bases and griddle stands definition does not refer to a maximum height.	Clarifies chef base and griddle stand definition by specifying a maximum height of 32 inches for this equipment.	Improves representativeness.
Does not provide procedures for CRE with no automatic defrost or with long duration defrost cycles.	References ASHRAE 72–2018R for test instructions for units with no automatic defrost and adopts optional two-part test for CRE with defrost cycles longer than 24 hours.	Addresses existing waiver; harmonizes with industry standard.
Includes conflicting instructions regarding TDA calculation.	Corrects errors in current test procedure by reference to AHRI 1200–202X.	Improves representativeness, repeatability, and reproducibility; harmonizes with industry standard.
Provides refrigerant conditions that applicable to common refrigerants.	Specifies refrigerant conditions to allow for testing with carbon dioxide refrigerant.	Improves representativeness; harmonizes with existing waiver.
Requires determining volume based on testing	Allows the use of computer-aided design (''CAD'') models to certify volume.	Reduces test burden.
Specifies a single door opening sequence	Defines customer order storage cabinet equipment category and specifies an alternate door opening sequence for this equipment.	Improves representativeness; harmonizes with existing waiver.
Does not specify product-enforcement provisions	Includes product-enforcement provisions for determining volume and TDA.	Improves clarity.

TABLE II.A—SUMMARY OF CHANGES IN PROPOSED TEST PROCEDURE RELATIVE TO CURRENT TEST PROCEDURE—Continued

Current DOE test procedure	Proposed test procedure	Attribution
Specifies LAPT instructions for temperatures above target test temperature.	Clarifies use of LAPT provisions for operating temperatures below the target test temperature.	Improves clarity.
Includes obsolete appendix A and current appendix B test procedures.	Removes obsolete appendix A; adds new appendix C for testing buffet tables and preparation tables, and new appendix D for testing blast chillers and blast freezers.	Improves readability.
Does not specify a sampling plan for volume and TDA ...	Specifies that volume and TDA be determined based on the mean of the test sample.	Improves representativeness, repeatability, and reproducibility.

DOE has tentatively determined that the proposed amendments described in section III of this NOPR would not alter the measured efficiency of CRE currently subject to energy conservation standards and would not require retesting or recertification solely as a result of DOE's adoption of the proposed amendments to the test procedures, if made final. Additionally, DOE has tentatively determined that the proposed amendments, if made final, would not increase the cost of such testing. Additionally, for buffet tables and preparation tables, and blast chillers and blast freezers, testing according to the proposed test procedure would not be required until the compliance date of any energy conservation standards for that equipment. To the extent manufacturers of these CRE are making voluntary representations regarding energy use, they would experience costs associated with retesting. DOE provides a discussion of these testing costs in section III.O.1 of this NOPR. Discussion of DOE's proposed actions are addressed in detail in section III of this NOPR.

III. Discussion

A. Scope and Definitions

''Commercial refrigerator, freezer, and refrigerator-freezer'' means refrigeration equipment that is not a consumer product (as defined in 10 CFR 430.2); is not designed and marketed exclusively for medical, scientific, or research purposes; operates at a chilled, frozen, combination chilled and frozen, or variable temperature; displays or stores merchandise and other perishable materials horizontally, semi-vertically, or vertically; has transparent or solid doors, sliding or hinged doors, a combination of hinged, sliding, transparent, or solid doors, or no doors; is designed for pull-down temperature applications or holding temperature applications; and is connected to a self-contained condensing unit or to a remote condensing unit. 10 CFR 431.62.

For the purpose of determining applicability of certain test procedure provisions, DOE is proposing to amend certain existing definitions and to establish certain new definitions, as discussed in the following paragraphs. DOE discusses additional equipment definitions and test procedures for specific equipment categories in section III.C of this NOPR.

1. Ice-Cream Freezers

DOE defines certain categories of CRE, including ''ice-cream freezer.'' DOE defines an ''ice-cream freezer'' as a commercial freezer that is designed to operate at or below −5 °F (±2 °F) (−21 °C ± 1.1 °C) and that the manufacturer designs, markets, or intends for the storing, displaying, or dispensing of ice cream. 10 CFR 431.62.

In the June 2021 RFI, DOE requested comment on the technical features that characterize ice-cream freezers and distinguish them from other categories of commercial freezers capable of operating at or below −5 °F. 86 FR 31182, 31184.

ITW commented that in general, ice-cream freezers are standard ''commercial freezers'' operating at a modified storage temperature. (ITW, No. 2, p. 1) True commented that when considering vertical freezers, there are no features that would distinguish a freezer storing ice cream from a standard commercial freezer, since both are designed to maintain the same integrated average temperature (''IAT'').[5] (True, No. 4, p. 2) However, True commented that there are significant differences between a CRE able to maintain an IAT of −15 °F and one that is only designed to maintain an IAT of 0 °F. (True, No. 4, p. 2)

ITW commented that dipping cabinets (*i.e.,* cabinets intended for ice cream service) are the obvious model type that can be easily distinguished from other freezers and are generally characterized by product visibility and accessories sold with the unit. (ITW, No. 2, p. 1)

Hussmann, AHRI, and Continental commented that ice-cream freezers often have a manual defrost to maintain frozen products, which may be a distinguishing feature for most ice-cream freezers. (AHRI, No. 3, p. 2; Hussmann, No. 14, p. 2; Continental, No. 6, p. 1) Hussmann, AHRI, and Continental commented that many of these models are of a cold wall design rather than forced air evaporation. (AHRI, No. 3, p. 2; Hussmann, No. 14, p. 2; Continental, No. 6, p. 1) Hussmann and AHRI stated that in ice cream applications it is imperative to avoid formation of ice crystals by maintaining temperature, particularly surrounding defrost cycles. (AHRI, No. 3, p. 2; Hussmann, No. 14, p. 2) Continental commented that features such as manual defrost and cold wall evaporators minimize temperature fluctuations. (Continental, No. 6, p.1)

Dipping cabinets are one configuration of CRE that likely is readily understood to be an ice-cream freezer; however, not all ice-cream freezers are dipping cabinets. As such DOE is not proposing to limit the definition of ''ice-cream freezer'' to those units. Additionally, while ice-cream freezers may implement manual defrosts or cold wall evaporators, DOE is aware of these equipment designs in other commercial freezers, such that they do not uniquely distinguish ice-cream freezers. DOE has not identified any technical features that would allow for distinguishing ice-cream freezers from other commercial freezers capable of operating at low temperatures and is therefore not proposing to include any additional equipment characteristics in the ice-cream freezer definition.

DOE notes that the equipment term and definition reference ''ice cream,'' but ''ice cream'' is not defined. DOE understands that other frozen products may be similarly stored and displayed. For example, gelato, frozen yogurt, sorbet, and other ice-cream-like

[5] Integrated average temperature means the average temperature of all test package measurements taken during the test. 10 CFR 431.62.

products are typically displayed, stored, and dispensed in the same manner as ice-cream. The CRE used for these food products is likely similar, if not identical, to equipment used to store, display, or dispense ice cream. In the June 2021 RFI, DOE requested comment on whether further specificity is needed for the term ''ice-cream.'' 86 FR 31182, 31184.

ITW commented that ice-cream and ice-cream like products can be divided into 3 temperature classes: (1) −5 °F to 5 °F, equipment designed to hold ice cream for immediate consumption; (2) −10 °F to −15 °F, equipment designed to hold ice cream for short term storage or retail sale; (3) −20 °F to −40 °F, equipment designed to hold ice cream for long term storage. (ITW, No. 2, p. 1)

Hussmann and AHRI agreed that the term ''ice cream'' does not exclusively apply to products that are designed to and tested at −15 °F, and that simply including or excluding the term ''ice cream'' does not accurately distinguish the appropriate product category. (Hussmann, No. 14, p. 2–3; AHRI, No. 3, p. 2) AHRI and Hussmann stated that they do not support the removal of the term ''ice cream,'' but support differentiating temperature categories for the various uses of ice-cream applications. (Hussmann, No. 14, p. 2–3; AHRI, No. 3, p. 2)

Hussmann and AHRI commented that the product category should be based on the designed, marketed, and intended use of the equipment. (Hussmann, No. 14, p. 2–3; AHRI, No. 3, p. 2) Hussmann and AHRI commented that there is an important distinction between many products that operate in the 0 °F to −5 °F range that are not designed to operate at −15 °F. (Hussmann, No. 14, p. 2–3; AHRI, No. 3, p. 2)

True commented that the use of the term ''ice-cream'' to distinguish a different equipment category does not make sense given the range of operating temperatures for different types of ice-cream and ice-cream like products, and that more generic terms should be used such as ''commercial low temperature freezer'' (IAT of 0 °F) and ''commercial lower temperature freezer'' (IAT of −15 °F). (True, No. 4, p. 2–3)

DOE recognizes that the reference to ''ice cream'' in the ice-cream freezer definition does not itself distinguish this equipment from other commercial freezers, and that the additional descriptors specified in the definition (*i.e.,* designed to operate at or below −5 °F) together classify a unit as an ice-cream freezer. However, to clarify the equipment classification and to avoid a potential understanding that the term is limited to equipment associated with ice cream and not other similar products, DOE is proposing to amend the ice-cream freezer definition to refer to equipment designed, marketed, or intended for the storing, displaying, or dispensing of ''frozen desserts,'' rather than ice cream specifically. DOE does not expect this proposal to affect testing or certifications for existing CRE because equipment designed for frozen desserts other than ice cream that otherwise meets the ice-cream freezer definition are likely already tested and certified as an ice-cream freezer.

DOE requests comment on the proposed amended definition of ice-cream freezer, and on whether any additional characteristics may better differentiate this equipment from other commercial freezers.

Appendix B requires testing all ice-cream freezers to an IAT of −15 °F. However, the term ''ice-cream freezer'' includes a variety of equipment with a range of typical operating temperatures during normal use. For example, certain ice-cream freezers are designed to operate considerably below −5 °F (sometimes referred to as ''hardening'' cabinets and specifically designed for ice cream storage), while other ice-cream freezers are designed to operate closer to 0 °F during typical use (*e.g.,* ''dipping cabinets'' and other equipment used to hold ice cream intended for immediate consumption). Ice-cream freezers intended for higher-temperature operation are often not capable of achieving an IAT of −15 °F. In such an instance, appendix B requires testing the units to the LAPT.

If certain ice-cream freezers not capable of reaching an IAT of −15 °F should instead be tested at an IAT of 0 °F, there may be an opportunity to better distinguish between ice-cream freezers and other freezers, as discussed earlier in this section. For example, the ice-cream freezer definition could be revised to refer to any freezer capable of operating at an IAT of −15 °F, regardless of the intended end use of the equipment. Any other equipment currently meeting the ice-cream freezer definition but not capable of reaching an IAT of −15 °F could instead be classified and tested as freezers, rather than ice-cream freezers. Such an approach would use the measured IAT of the equipment as the basis for this equipment definition, thus eliminating the reliance on manufacturer intent or the end use of the equipment.

In the June 2021 RFI, DOE requested comment on whether equipment that meets the current ice-cream freezer definition but cannot operate at an IAT of −15 °F ± 2 °F should be tested at an IAT of 0 °F ± 2 °F instead of the LAPT. 86 FR 31182, 31184. DOE additionally requested comment on whether the ice-cream freezer definition should refer only to equipment that is capable of achieving an IAT of −15 °F ± 2 °F without reference to the manufacturer's designed, marketed, or intended use. *Id.*

The Joint Commenters, True, and NEEA supported changing the definition of ''ice-cream freezer'' to refer to operating capabilities instead of design intent, or replacing ''ice-cream'' with a more generic term, to remove ambiguity of equipment classes and ensure a standardized temperature (−15 °F or 0 °F). (Joint Commenters, No. 8, p. 1; True, No. 4, p. 3; NEEA, No. 5, p. 4) ITW, NEEA, and CA IOUs further supported testing at standard IATs instead of LAPT to create a more direct comparison of daily energy consumption. (ITW, No. 2, p. 1; NEEA, No. 5, p. 4–5) True commented that the test procedure, in specifying IATs of 0 °F and −15 °F, is acceptable. True also commented that CRE capable of maintaining an IAT of −15 °F should have a greater energy allowance than CRE only capable of maintaining an IAT of 0 °F. (True, No. 4, p. 3)

Hussmann, AHRI, Hoshizaki, and True agreed that ''ice-cream'' freezers that are not designed, marketed, and intended to operate at −15 °F could be tested at an IAT of 0 °F ± 2 °F instead of the LAPT. (Hussmann, No. 14, p. 2–3; AHRI, No. 3, p. 2; Hoshizaki, No. 13, p. 1; True, No. 4, p. 3) Hussmann, AHRI, Hoshizaki, and Continental disagreed that the ice-cream freezer definition should only refer to equipment that can achieve an IAT of −15 °F ± 2 °F without reference to the manufacturer's designed, marketed, or intended use, asserting that the product category and definition should be based on these factors. (Hussmann, No. 14, p. 2–3; AHRI, No. 3, p. 2, Hoshizaki, No. 13, p. 1; Continental, No. 6, p. 1) Continental added that this terminology is commonly used by manufacturers and dealers to identify the appropriate equipment for these applications. (Continental, No. 6, p. 1)

NEEA commented that as of July 16, 2021, there were 434 commercial ice-cream freezers listed in DOE's compliance certification database, with 410 rated for operation at either −10 °F or −15 °F, and the remaining 24 units with an LAPT of −5 °F. (NEEA, No. 5, p. 4) NEEA added that the 24 units rated at −5 °F were all service over counter (''SOC'') units, demonstrating that their intended use is for immediate consumption, whereas the other 410 units' primary function was for hardening. (NEEA, No. 5, p. 4) The CA IOUs commented on this same dataset;

however, they noted that 88 percent (382 units) of models were tested at −15 °F, with the remaining 12 percent (52 units) tested at −5 °F or −10 °F. (CA IOUs, No. 10, p. 5)

NEEA commented that DOE should define ice-cream freezers as those able to operate at −10 °F, and that −10 °F is appropriate for both testing and the definition, since it is more representative of field usage and is low enough to achieve ice cream hardening. (NEEA, No. 5, p. 4–5) NEEA commented that the definitions in both 10 CFR 431.62 and ENERGY STAR define ice-cream freezers as designed to operate at or below −5 °F, further supporting a temperature higher than −15 °F for testing, and that this higher temperature (*i.e.,* −10 °F) would capture a greater number of units under one definition and test. (*Id.*)

The CA IOUs commented that there are two distinct uses for ice-cream freezers: ice cream storage cabinets (with a cold holding temperature of −15 °F) and ice cream dipping cabinets (which provide malleable ice cream serving at −5 °F). (CA IOUs, No. 10, p. 5) The CA IOUs commented that in their investigation they found that models tested at non-standard temperatures (*i.e.,* above −15 °F) occurred primarily in horizontal closed solid (''HCS'') equipment, of which 30 percent of products were tested at −10 °F; and service over counter equipment, of which 51 percent of products were tested at −5 °F. (CA IOUs, No. 10, p. 5–6). The CA IOUs commented that the DOE should consider renaming the HCS ice-cream freezers to ''solid door ice cream dipping cabinet'' and SOC ice-cream freezer to ''glass door ice cream dipping cabinet'' to better align with industry terms and differentiate between products tested at −15 °F. (*Id.)* The CA IOUs suggested testing these two equipment classes for ice cream dipping applications at −5 °F. *(Id.)*

DOE participated in the committee meetings to consider updates to AHRI 1200–2013, eventually leading to the development of AHRI 1200–202X. During these meetings, the committee discussed ice-cream freezer rating temperatures and considered additional or alternate rating temperatures for ice-cream freezer applications. The committee determined that the existing rating points for commercial freezers (*i.e.,* −15 °F for ice-cream freezers and 0 °F for freezers) are appropriate rating points for the range of typical commercial freezer operation and maintained these rating points in section 3.15 ''Product Temperature'' of AHRI 1200–202X. Consistent with the latest industry rating standard, DOE is not proposing to amend the commercial freezer target IATs for testing.

Of the 418 ice-cream freezer models certified to DOE,[6] 50 are rated based on LAPTs higher than −15 °F, including 24 models with a rating temperature of −5 °F. Many of these models have a horizontal or service over counter configuration and are intended to hold ice cream for immediate consumption.

DOE recognizes that testing and rating certain commercial freezers to 0 °F may be more appropriate than testing and rating to −15 °F. DOE already requires a 0 °F rating temperature for commercial freezers. Based on comments from interested parties and a review of the commercial freezer market, DOE has tentatively determined that ice-cream freezers that meet the current ice-cream freezer definition but cannot operate as low as an IAT of −15 °F ± 2 °F can be tested at an IAT of 0 °F ± 2 °F. Therefore, DOE is proposing to amend the ice-cream freezer definition in this NOPR to specify that the designed operating temperature is required to be at or below −15.0 °F (±2.0 °F), upon the compliance date(s) of any amended energy conservation standard(s) for ice-cream freezers.

To clarify which commercial freezers are required to test at an IAT of 0 °F according to appendix B, DOE is proposing to define the term ''low-temperature freezer'' to mean a commercial freezer that is not an ice-cream freezer.

DOE requests comment on the proposed amended definition for ice-cream freezer and the proposed definition for low-temperature freezer.

2. High-Temperature CRE

DOE defines ''commercial refrigerator as'' a unit of commercial refrigeration equipment in which all refrigerated compartments in the unit are capable of operating at or above 32 °F (±2 °F). 10 CFR 431.62.

Section 2.1 of appendix B requires testing commercial refrigerators to an IAT of 38 °F ± 2 °F. DOE is aware of equipment that meets the definition of a commercial refrigerator but is capable of operating only at temperatures above the 38 °F ± 2 °F IAT required for testing. Examples of these types of equipment include CRE designed for storing or displaying chocolate and/or wine, with typical recommended storage temperatures around 55 °F. Consistent with the current test procedure, manufacturers certify such equipment using the LAPT setting. LAPT can vary by model, so this approach which does not rely on a uniform operating temperature can result in measured energy consumptions that are not necessarily comparable between models.

In the June 2021 RFI, DOE stated that it was considering adding a definition for ''high-temperature refrigerator'' to better delineate commercial refrigerators not capable of operating at the IAT required for testing a commercial refrigerator. 86 FR 31182, 31184.

The Joint Commenters, NEEA, CA IOUs, AHRI, and Hussmann supported DOE establishing a new definition for ''high-temperature refrigerator'' and separate test requirements for this equipment. (Joint Commenters, No. 8, p. 1–2; NEEA, No. 5, p. 6; CA IOUs, No. 10, p. 5; AHRI, No. 3, p. 3; Hussmann, No. 14, p. 4)

AHRI and Hussmann commented that they support a higher temperature category and requested that it be representative of the higher temperature ranges used in the marketplace (*e.g.,* floral, wine, cigars, meat aging, etc.). (AHRI, No. 3, p. 3; Hussmann, No. 14, p. 4)

ITW commented that it is desirable to maintain consistent testing criteria between DOE equipment families to eliminate errors and misunderstandings between nationally recognized testing laboratories (''NRTLs''), DOE, manufacturers, and consumers. (ITW, No. 2, p. 2) ITW commented that changes to the test procedure for high-temperature refrigerators would account for only nominal differences in the measured energy consumption rate, while adding complexity. (*Id.*)

NEEA commented that DOE should develop a definition and test procedure for high temperature commercial cabinets as a parallel to DOE's definition of residential high temperature refrigerators, and stated that there is a the potential for energy savings in this equipment category. (NEEA, No. 5, p. 6–7)

DOE is aware of certain commercial refrigerators that are intended for use only at IATs higher than the 38 °F ± 2 °F required by the existing DOE test procedure. For example, 133 models of single-compartment commercial refrigerators are rated at LAPTs at or above 40 °F. By definition, these models are not capable of operating at the required test integrated average temperature. 10 CFR 431.62. As indicated in comments from interested parties, categorizing these commercial refrigerators in a separate high-temperature category would allow DOE to consider test procedures for this

[6] Based on review of DOE's Compliance Certification Database, available at *www.regulations.doe.gov/certification-data* (accessed February 1, 2022).

equipment that may better represent actual use.

To allow for differentiating typical commercial refrigerators from commercial refrigerators that operate only at higher temperature, DOE proposes to define ''high-temperature refrigerator'' as a commercial refrigerator that is not capable of operating with an integrated average temperature as low as 38.0 °F (±2.0 °F). DOE recognizes that certain commercial refrigerators may be capable of operating with IAT of 38.0 °F (±2.0 °F) but are intended for use at higher storage temperatures. However, DOE is proposing to define ''high-temperature refrigerator'' based on operating capability rather than intended use to ensure consistent application of DOE's definitions and to ensure that CRE currently tested and rated with IATs of 38.0 °F (±2.0 °F) would continue to be categorized, tested, and rated at that operating condition.

To clarify the classification of commercial refrigerators overall, DOE is also proposing to define the term ''medium-temperature refrigerator'' to refer to commercial refrigerators capable of operating with IATs of 38.0 °F (±2.0 °F) or lower. As discussed further in section III.B.1.b of this document, DOE is proposing to require testing high-temperature refrigerators according to AHRI 1200–202X, which requires an IAT of 55 °F ± 2.0 °F. Under the proposed approach, a commercial refrigerator would be tested and rated as either a medium-temperature refrigerator (if capable of operating with an IAT of 38.0 °F (±2.0 °F)) or as a high-temperature refrigerator (if not capable of operating with an IAT as low as 38.0 °F (±2.0 °F)).

DOE recognizes that certain commercial refrigerators may be capable of operating at both IATs of 38 °F (±2.0 °F) and 55 °F (±2.0 °F). In the April 2014 Final Rule, DOE stated that CRE capable of operating at IATs that span multiple equipment categories must be certified and comply with DOE's regulations for each applicable equipment category. 79 FR 22277, 22291. The proposed definition of high-temperature refrigerator would exclude CRE capable of operating at medium temperatures (*i.e.,* an IAT of 38 °F), and therefore would exclude models capable of operating at both IATs. Thus, as proposed, a unit of CRE capable of operating at both IATs of 38 °F and 55 °F would meet the definition of only a medium-temperature refrigerator.

As an alternative to the proposed definition, DOE could instead define high-temperature refrigerator based only on the capability of a commercial refrigerator to operate at IATs of 55 °F (±2.0 °F). Under such an alternate approach, a unit of CRE capable of operating at both IATs of 38 °F and 55 °F would meet the definition of both a medium-temperature refrigerator and a high-temperature refrigerator.

DOE requests comment on the proposed definitions for high-temperature refrigerator and medium-temperature refrigerator, including whether the terms should be mutually exclusive or constructed such that equipment could be considered to meet both definitions.

DOE discusses proposed test requirements for this equipment in section III.B.1.b of this NOPR.

3. Convertible Equipment

In the April 2014 Final Rule, DOE noted that some basic models of CRE may have operating characteristics that include an operating temperature range that spans multiple equipment classes and subsequently required that self-contained equipment or remote condensing equipment with thermostats capable of operating at IATs that span multiple equipment categories be certified and comply with DOE's regulations for each applicable equipment category. 79 FR 22277, 22291. Similarly, DOE adopted requirements for remote condensing equipment without a thermostat that specify that if a given basic model of CRE is marketed, designed, or intended to operate at IATs spanning multiple equipment categories, the CRE basic model must be certified and comply with the relevant energy conservation standards for all applicable equipment categories. *Id.*

DOE is proposing to specify in 10 CFR 429.42 the requirements from the April 2014 Final Rule that require basic models of CRE that operate in multiple equipment classes to certify and comply with the energy conservation standards for each applicable equipment class. This proposal is consistent with the notice of petition for a test procedure waiver that DOE published on May 26, 2017, for AHT Cooling Systems GmbH and AHT Cooling Systems USA Inc. (''AHT'') in which DOE declined to grant AHT an interim waiver that would allow for testing only in the ice-cream freezer equipment class for AHT's specified multi-mode CRE basic models. 82 FR 24330.

DOE requests comment on the proposal to specify the requirements from the April 2014 Final Rule regarding basic models of CRE that operate in multiple equipment classes.

B. Updates to Industry Test Standards

DOE's test procedure for CRE currently adopts through reference certain provisions of AHRI 1200–2010, ASHRAE 72–2005, and AHAM HRF–1–2008. 10 CFR 431.63. With regard to the provisions relevant to the DOE test procedure, AHRI 1200–2010 references certain provisions of ASHRAE 72–2005 and AHAM HRF–1–2008.

Since establishing the DOE test procedure in appendix B, AHRI, ASHRAE, and AHAM have published updated versions of the referenced test standards. On October 1, 2013, ANSI approved an updated version of AHRI 1200, ANSI/AHRI Standard 1200 (I–P), ''2013 Standard for Performance Rating of Commercial Refrigerated Display Merchandizers and Storage Cabinets,'' (''AHRI 1200–2013''). On August 1, 2018, ANSI approved an updated version of ASHRAE 72, ANSI/ASHRAE Standard 72–2018, ''Method of Testing Open and Closed Commercial Refrigerators and Freezers,'' (''ASHRAE 72–2018''). AHAM more recently approved and published an updated version of its industry test standard, AHAM HRF–1–2019, ''Energy and Internal Volume of Refrigerating Appliances,'' (''AHAM HRF–1–2019''). For each of these industry test standards, DOE has initially determined that the changes within these updated industry test standards are either editorial, improve clarity, better harmonize with the DOE test procedure, or not relevant to CRE (*e.g.,* relevant to products such as consumer refrigerators). Based on DOE's initial assessment, the changes in the updated versions of the industry test standards would not impact the measured energy consumption, volume, or TDA of CRE, as applicable.

DOE is also aware of updates being considered for AHRI 1200–2013 and ASHRAE 72–2018. DOE has participated in the industry committee meetings in which updates to these industry standards are being developed. Based on these meetings, the changes being considered by the industry committee appear intended largely to improve the clarity, consistency, and representativeness of the industry test methods. DOE discusses these changes further in sections III.B.1 and III.B.2 of this NOPR.

In the June 2021 RFI, DOE requested comment on whether it should reference the most recent versions of AHRI 1200 or ASHRAE 72 and whether any of the updates to these standards would have an impact on the measured energy consumption of CRE, and if so, how. 86 FR 31182, 31185. DOE additionally

requested comment on whether the CRE test procedure should reference the most current version of AHAM HRF–1 and whether any of the updates to that standard would have an impact on measured volume, and if so, how. *Id.*

Hoshizaki and Continental commented in support of referencing AHRI 1200–2013 and ASHRAE 72–2018. (Hoshizaki, No. 13, p. 1; Continental, No. 6, p. 1) The CA IOUs commented in support of referencing ASHRAE 72–2018. (Hoshizaki, No. 13, p. 1; Continental, No. 6, p. 1CA IOUs, No. 10, p. 2) ITW commented that the DOE should only consider the ANSI approved versions of AHRI 1200–2013, ASHRAE 72–2018, and AHAM HRF–1–2008 [7] standards, stating that any reference to standards not yet approved would be premature and would not consider the final impact. (ITW, No. 2, p. 2) AHRI and Hussmann commented that DOE should incorporate by reference the upcoming versions of AHRI 1200 and ASHRAE 72. (AHRI, No. 3, p. 3–4; Hussmann, No. 14, p. 5) AHRI and Hussmann commented that both draft standards are in the review phase and that draft copies were available to DOE upon request. (*Id.*)

AHRI and Hussmann commented that the AHAM HRF–1–2008 volume calculations have been incorporated into the latest version of AHRI 1200 and ASHRAE 72 and that the appropriate volume requirements are covered in appendix C of AHRI Standard 1200 to avoid referencing a standard that does not specifically apply to industry equipment. (AHRI, No. 3, p. 3–4; Hussmann, No. 14, p. 5) AHRI and Hussmann also commented that appendix C of AHRI 1200 encourages the use of computer models to determine measured volumes. (*Id.*)

Hoshizaki and Continental commented that DOE should not require retesting and recertification of already certified products, as doing so would create additional burden on manufacturers. (Hoshizaki, No. 13, p. 1; Continental, No. 6, p. 1) AHRI and Hussmann commented that DOE would need to evaluate if the updated standards would require retesting of already certified equipment or reevaluation of energy efficiency metrics and levels. (AHRI, No. 3, p. 3–4; Hussmann, No. 14, p. 5)

DOE is aware that revisions to AHRI 1200–2013 and ASHRAE 72–2018 are underway. Specifically, DOE expects the ongoing revision to AHRI 1200–2013 to be near complete and has considered a draft version [8] of the updated standard for the purposes of the proposals in this NOPR (referred to as ''AHRI 1200–202X'' to distinguish this from existing versions of the standard). Similarly, DOE expects that the ongoing revision to ASHRAE 72 is also nearly complete. On April 22, 2022, ASHRAE published a second public review draft of the revision to ASHRAE 72–2018 (referred to as ''ASHRAE 72–2018R'').

DOE is proposing to incorporate by reference the most current versions of AHRI 1200 and ASHRAE 72, as discussed in the following sections. For the purposes of this NOPR, DOE references AHRI 1200–202X and ASHRAE 72–2018R to indicate the language in the available draft updates. DOE has participated in the committee processes to develop the revised standards for both AHRI 1200 and ASHRAE 72. Based on this participation, DOE does not expect that substantive revisions will be made to AHRI 1200–202X and ASHRAE 72–2018R in the final published versions of the standards. DOE's intent is to adopt the final versions of these industry standards (with deviations as proposed in this NOPR) when they are available, to the extent that they are consistent with the review drafts discussed in this document. DOE will review and consider the final published versions of each standard when available.

DOE acknowledges that the versions of the industry test standards proposed for incorporation by reference in this NOPR are not yet ANSI approved. However, DOE has tentatively determined that these standards provide an appropriate basis for testing that would produce test results which reflect energy use of CRE during a representative average use cycle and would not be unduly burdensome to conduct as required by 42 U.S.C. 6314(a)(2).

The following sections discuss the revisions made in each of these industry test standards and DOE's proposed adoption of certain provisions of the industry standards into the DOE test procedure.

1. AHRI 1200

As stated in the June 2021 RFI, the 2013 revision to AHRI 1200 provides editorial, clarifying, or harmonizing updates that would not impact the measured energy consumption, volume, or TDA of CRE as compared to the current test procedure. 86 FR 31182, 31184. As compared to AHRI 1200–2013, DOE has tentatively determined that the revisions in AHRI 1200–202X are largely to improve clarity of the test standard. These draft updates address application of the standard and its use in relation to other industry standards (*i.e.,* ASHRAE 72–2018). Specifically, AHRI 1200–202X includes the following updates: harmonized definitions for consistency with ASHRAE 72–2018 and DOE's existing regulations; updated definitions for consistency with the use of the rating standard; removal of test requirements that were duplicative with ASHRAE 72–2018; clarified measurement requirements and the use of calculations; inclusion of direct refrigerated volume measurement instructions (rather than referencing the AHAM test standard); and detailed total display area requirements and examples.

DOE is proposing to incorporate by reference AHRI 1200–202X for use in the DOE test procedure because DOE has tentatively determined that the updates compared to AHRI 1200–2013 would improve the clarity of the test standard, ensure consistent testing, and as a result would improve reproducibility of the test procedure. As stated, AHRI 1200–202X includes procedures for measuring refrigerated volume rather than referring to the AHAM standard (although the procedures are consistent between these standards). Therefore, DOE is proposing to remove the incorporation by reference of AHAM HRF–1–2008 and instead refer to AHRI 1200–202X directly for refrigerated volume measurement. Based on DOE's review of AHRI 1200–202X, the updates included in the standard are primarily editorial and are not expected to change test results as compared to the existing test procedure, except for the specific updates as discussed in the following paragraphs. Therefore, DOE has tentatively determined that any existing test data for CRE currently available on the market are expected to be consistent with the proposed test procedure.

[7] ITW and other commenters did not reference a specific ANSI approved version of AHRI 1200, ASHRAE 72, and AHAM HRF–1. DOE assumed commenters referenced the most recent ANSI approved versions of these standards—AHRI 1200–2013 and ASHRAE 72–2018—unless otherwise specified by the commenter. DOE assumed commenters referenced the ANSI approved version of AHAM HRF–1 (*i.e.,* HRF–1–2008) referenced by ASHRAE 72–2018 and AHRI 1200–2013, unless otherwise specified by the commenter.

[8] On August 17, 2021, AHRI shared with DOE a draft version of AHRI 1200 for the purposes of referencing. AHRI indicated an expected publication date by the end of 2021. The updated AHRI 1200 has not yet published, so DOE is referencing the draft standard in this NOPR. As indicated in the AHRI correspondence, AHRI Standard 1200–202X is in draft form and its text was provided to the Department for the purposes of review only during the drafting of this NOPR. Free copies of published AHRI Standards and a listing of documents open for Public Comment are available on the AHRI website. The draft of AHRI 1200 is available in the docket for this proposed rulemaking on *regulations.gov.*

DOE requests comment on the proposal to incorporate by reference AHRI 1200–202X and on whether the use of the updated test method would impact CRE ratings based on the current DOE test procedure.

In addition to the clarifying revisions that would not substantively change testing as compared to the current approach using the DOE test procedure and AHRI 1200–2013, AHRI 1200–202X also includes two substantive additions: addressing the use of high glide refrigerants and providing an additional temperature rating point for ''high temperature'' applications. DOE is proposing to adopt these provisions in its test procedure, as discussed in the following sections.

a. High Glide Refrigerants

For remote condensing CRE, AHRI 1200 provides calculations to estimate the compressor energy consumption necessary to provide the cooling to the refrigerator or freezer. These calculations are based on the dew point of the refrigerant during testing, which is intended to be representative of the evaporator temperature. See Table 1 and Section 5.2.1 of AHRI 1200–2013 and AHRI 1200–202X.

For certain refrigerants, the saturated vapor temperature (*i.e.,* the dew point) can be different from the saturated liquid temperature at a given pressure, in which case the refrigerant is considered to have ''glide.'' AHRI 1200–202X includes a definition for ''high glide refrigerant'' as a zeotropic refrigerant blend whose temperature glide is greater than 2 °F. ASHRAE defines ''glide'' as the absolute value of the difference between the starting and ending temperatures of a phase-change process by a refrigerant within a component of a refrigerating system, exclusive of any subcooling or superheating. This term usually describes condensation or evaporation of a zeotrope.[9]

For high glide refrigerants, the refrigerant dew point is not necessarily representative of the overall evaporator temperature. AHRI 1200–202X specifies that for high glide refrigerants, the temperature used to calculate compressor energy consumption is based on an adjusted mid-point evaporator temperature rather than an adjusted dew point temperature.

Because the evaporator provides cooling to the CRE over the entire heat exchanger surface, using the evaporator mid-point temperature would ensure that the temperature used to calculate compressor energy consumption is more representative of the overall evaporator temperature. DOE has initially determined that the AHRI 1200–202X approach of using the evaporator mid-point temperature rather than refrigerant dew point is more representative of actual remote condensing CRE use for which the equipment uses high glide refrigerants and would improve consistency of remote testing using different refrigerants. Additionally, this approach would improve consistency when testing a given remote condensing CRE model with either high glide or low glide refrigerants by ensuring that the evaporator mid-point temperature for a high glide refrigerant is similar to the refrigerant dew point for a low glide refrigerant.

DOE is proposing to adopt through reference the high glide refrigerant provisions of AHRI 1200–202X. Because the existing DOE test procedure, by reference to AHRI 1200–2013, only references adjusted dew point for calculating compressor energy consumption, this proposed amendment would result in different test results for remote condensing CRE models tested with a high glide refrigerant. However, DOE expects that current remote condensing CRE models are typically tested and rated using low glide refrigerants (most commonly R–404A); therefore, DOE has tentatively determined that this proposed test procedure amendment is not expected to result in changes to rated energy consumption for any currently available remote CRE models.

DOE requests comment on the proposal to incorporate by reference AHRI 1200–202X, including the new provisions regarding high glide refrigerants. DOE also requests information on whether any remote condensing CRE are currently tested and rated using high glide refrigerants and whether the proposed test procedure would impact the rated energy consumption for such models.

b. High Temperature Applications

As discussed in section III.A.2 of this NOPR, DOE is proposing a definition for ''high-temperature refrigerator.'' In the context of consumer refrigeration products, DOE established the miscellaneous refrigeration product category to capture similar consumer products, with ''coolers'' tested at a standardized cabinet temperature of 55 °F.[10]

In the June 2021 RFI, DOE requested comment on whether an IAT of 55 °F ± 2 °F is an appropriate test condition for high-temperature CRE and data on the typical operating temperatures for this equipment. 86 FR 31182, 31184. DOE also requested comment on whether any additional clarifications to the test procedure are needed (*i.e.,* appropriate loading and door-opening requirements for high-temperature CRE). *Id.*

AHRI, Hussmann, NEEA, and CA IOUs commented that an IAT of 55 °F ± 2 °F is an appropriate test condition for commercial high-temperature refrigerators. (AHRI, No. 3, p. 4; Hussmann, No. 14, p. 3; NEEA, No. 5, p. 7; CA IOUs, No. 10, p. 5) AHRI and Hussmann commented that this test condition was incorporated into the latest draft version of AHRI Standard 1200. (AHRI, No. 3, p. 4; Hussmann, No. 14, p. 4)

NEEA also commented that higher-temperature CRE are sometimes designed to have a highly specific end use such as the following: high humidity floral cabinets (~35 °F), wine chillers (~55 °F), low humidity chocolate cabinets (~65 °F), higher humidity (~70 percent relative humidity) cigar cabinets (~70 °F). (NEEA, No. 5, p. 7) NEEA commented in support of the 55 °F IAT, but encouraged DOE to identify whether more than one IAT is needed to effectively represent higher-temperature CRE. (*Id.)* The CA IOUs also commented in support of the DOE testing high temperature CRE products at a consistent operating temperature rather than at an LAPT. (CA IOUs, No. 10, p. 5)

AHRI and Hussmann commented that the door openings and loadings outlined in the ASHRAE 72–2018 are an adequate representation of high temperature CRE systems. (AHRI, No. 3, p. 3; Hussmann, No. 14, p. 4)

NEEA recommended that DOE evaluate if the International Electrotechnical Commission (''IEC'') standard 62552:2015, ''Household refrigerating appliances—Characteristics and test methods'' (''IEC 62552:2015'') can be used with high temperature CRE. (NEEA, No. 5, p. 6–7)

Section 3.15.1 of AHRI 1200–202X specifies that CRE intended for high temperature applications shall have an integrated average temperature of 55 °F ± 2.0 °F. As stated, DOE requires testing high-temperature consumer refrigeration products (*i.e.,* ''coolers'') at a standardized cabinet temperature of 55 °F. 10 CFR part 430, subpart B, appendix A.

Based on consideration of comments from interested parties, the industry rating method, and the analogous existing test procedure for consumer refrigeration products, DOE is proposing

[9] See ASHRAE's glossary of defined terms at *xp20.ashrae.org/terminology/.*

[10] *See* 10 CFR part 430, subpart B, appendix A.

to require testing high-temperature refrigerators according to AHRI 1200–202X, which requires an integrated average temperature of 55 °F ± 2.0 °F.

As noted by commenters, high-temperature refrigerators may serve many distinct applications, each with specific intended storage conditions. However, DOE has initially determined that the IAT specified in AHRI 1200–202X is most representative of high-temperature refrigerator operating conditions overall because the high-temperature refrigerators that DOE identified have operating temperature ranges which include 55 °F and allows for consistent measurements of energy use for equipment in this category.

In referencing AHRI 1200–202X, the DOE test procedure would also require that high-temperature refrigerators be tested according to the same procedure as other CRE, other than the IAT. Supported by comments from AHRI and Hussmann, DOE has tentatively determined that the door opening and loading procedures in ASHRAE 72–2018R are appropriate for high-temperature refrigerators. Following the proposed test approach would also ensure consistent test methods across CRE categories, albeit at different IATs.

In response to NEEA's comment regarding the use of IEC 62552:2015 for high-temperature refrigerators, DOE notes that IEC 62552:2015 is intended for testing household refrigerating appliances. Additionally, DOE's test procedures for consumer refrigeration products do not follow the approach in IEC 62552:2015 and instead reference AHAM HRF–1–2019. See 10 CFR part 430, subpart B, appendix A and appendix B. Based on available industry standards and for consistency with existing DOE test procedures, DOE has tentatively determined that testing according to AHRI 1200–202X would be more appropriate for high-temperature CRE than IEC 62552:2015.

DOE requests comment on the proposal to adopt a rating point of 55 °F ± 2.0 °F for high-temperature refrigerators by adopting through reference certain provisions of AHRI 1200–202X.

Because the proposed test procedure for high-temperature refrigerators would amend the current test approach for certain commercial refrigerators (*i.e.,* those currently rated using the LAPT), DOE is proposing that the high-temperature refrigerator provisions in AHRI 1200–202X would not be required for use until the compliance date of any energy conservation standards established for high-temperature refrigerators based on the proposed test procedure. Under this approach, CRE that would be defined as high-temperature refrigerators would continue to be tested and rated at the LAPT and subject to the current DOE energy conservation standards for CRE.

2. ASHRAE 72

As stated in the June 2021 RFI, the 2014 and 2018 revisions to ASHRAE 72 provide editorial, clarifying, or harmonizing revisions that would not impact the measured energy consumption, volume, or TDA of CRE as compared to the existing DOE test procedure. 86 FR 31182, 31184.

The revisions in ASHRAE 72–2018R as compared to the most recent 2018 version are largely to improve clarity of the test standard and include substantial re-organization of the test standard. Specifically, the foreword to ASHRAE 72–2018R states that the revision reorganizes the standard to make it easier to read and use; includes updates in the loading of test simulators and filler material; revises the sequence of operations during the test; provides instructions for certain measurements; and adds provisions for roll-in racks. The following paragraphs describe these revisions in more detail.

The reorganization of the test standard in ASHRAE 72–2018R is not expected to substantively change any test requirements as compared to the current test procedure. DOE understands that the intent of the reordering was to more closely align the test standard with the order of operations that a test facility would follow when conducting testing.

The updates to the loading of test simulators (a small package with temperature measuring device) and filler material (material loaded between test simulators for additional product mass, intended to approximate food product loading) in ASHRAE 72–2018R revise certain requirements included in ASHRAE 72–2005. These updates change certain instructions regarding loading, but DOE has tentatively determined that these updates are either clarifying in nature or more closely align ASHRAE 72 with the capability of test facilities to conduct testing. Specifically, ASHRAE 72–2018R would improve the clarity of the simulator loading location instructions, more clearly define net usable volume to determine the loaded volume, and adjust the fill volumes from 70 to 90 percent of the net usable volume to 60 to 80 percent. See Section 5.4 of ASHRAE 72–2018R.

DOE has tentatively determined that in principle the update to the fill volume requirement would be a substantive change to the current DOE test procedure. However, DOE understands that ASHRAE implemented this revision because test facilities currently may have difficulty loading to more than 80 percent of the net usable volume. Based on this difficulty, DOE expects that most tests are currently conducted with loads between 70 to 80 percent of the net usable volume. Additionally, the revision to allow loading as low as 60 percent of net usable volume would allow additional flexibility for test facilities when loading equipment for testing and any impact on measured energy use is expected to be minimal. DOE also expects that to the extent that testing with a lower load percentage would have any impact on measured energy use, it would likely increase measured energy use as CRE with doors would have more internal compartment volume occupied by air rather than the test load, allowing for more internal air to exchange with warm ambient air during the test procedure's door opening period. Therefore, DOE has tentatively determined that this proposed amendment to the test procedure would not allow any CRE not currently complying with DOE's energy conservation standards to become compliant.

Section 7.1 of ASHRAE 72–2018R specifies the sequence of operations for conducting a test. The overall sequence requires conducting two tests, Test A and Test B, to verify stability of the unit under test. Both Test A and Test B would be conducted in the same way—starting with a defrost and with door or drawer openings, night curtains, and lighting occupancy sensors and controls, as applicable—as specified in Section 7.3 of ASHRAE 72–2018R. The test is determined to be stable if the average temperature of simulators during Test B is within 0.4 °F of the average measured temperature during Test A. *See* Section 7.5 of ASHRAE 72–2018R. As compared to the current DOE test procedure and ASHRAE 72–2005, the 2018R version provides specificity for how to determine that a test is stable. ASHRAE 72–2005 currently requires steady-state conditions for the test (section 7.1.1) and a stabilization period during which the CRE operates with no adjustment to controls for at least 12 hours (section 7.4). Section 3 of ASHRAE 72–2005 defines steady-state as the condition in which the average temperature of all test simulators changes less than 0.4 °F from one 24-hour period or refrigeration cycle to the next. ASHRAE 72–2005 does not specify whether the 24-hour periods used to determine steady-state conditions

include door openings, which are required to be performed during the 24-hour performance test. Additionally, the temperatures maintained over a 24-hour period with door openings may differ from a 24-hour period with no door openings. If steady-state is determined without door openings, the door openings during a test may increase simulator temperatures outside of the desired range for a test, requiring a change to the temperature setting and re-starting the steady-state determination prior to another test period.

Whereas, the approach included in ASHRAE 72–2018R specifies that Test A and Test B are conducted in the same way, and therefore the temperatures used to determine stability would also be at the target temperatures for the test. DOE has determined that this approach provides clarity to the existing test procedure while limiting burden by reducing the need for re-tests (*i.e.,* by maintaining target temperatures during the stability determination). Because the sequence of operations in ASHRAE 72–2018R is generally consistent with ASHRAE 72–2005 but with added specificity, DOE does not expect that the updated sequence of operations would impact current CRE ratings based on the current DOE test procedure.

Additionally, ASHRAE 72–2018R more explicitly specifies test conditions and data collection requirements in a new appendix A: ''Measurement Locations, Tolerances, Accuracies, and Other Characteristics.'' This appendix includes a table that presents the measurements required during testing, the measurement location (if applicable), the period of time the measurement is taken (*e.g.,* once per minute throughout Test A and Test B, once before Test B, and once after Test B, *etc.*), the required measurement accuracy, and the required value (*i.e.,* the test condition, if applicable). The measurement instructions and requirements in appendix A to ASHRAE 72–2018R are generally consistent with those required by the current DOE test procedure, by reference to ASHRAE 72–2005, but with added specificity to clarify the applicable requirements. Because the measurement instructions in ASHRAE 72–2018R are generally consistent with ASHRAE 72–2005 but with added specificity, DOE does not expect that the updated requirements in appendix A would impact current CRE ratings based on the current DOE test procedure.

ASHRAE 72–2018R also adds provisions for testing CRE used with roll-in racks. Sections 5.4.1 and 5.4.5 of ASHRAE 72–2018R provide loading instructions for CRE used with roll-in racks. These sections are generally consistent with the existing test requirements for CRE, but with additional clarification specific to roll-in racks to describe the determination of net usable volume and loading of test simulators. Whereas, ASHRAE 72–2005 includes roll-in racks within the scope of the test standard (see section 9.1) but does not provide additional test instructions for these models. Because the instructions for testing CRE used with roll-in racks in ASHRAE 72–2018R are generally consistent with ASHRAE 72–2005 but with added specificity, DOE does not expect that the updated requirements in appendix A would impact current CRE ratings based on the current DOE test procedure.

As discussed, the test procedure in ASHRAE 72–2018R is generally consistent with the existing DOE test procedure, which references ASHRAE 72–2005. The updates included in ASHRAE 72–2018R are generally editorial, clarifying, or harmonizing revisions. Additionally, the substantive revisions in ASHRAE 72–2018R provide additional specificity to the existing test procedure requirements and would improve repeatability, reproducibility, and representativeness of the test procedure while limiting test burden. For these reasons, DOE is proposing to incorporate by reference ASHRAE 72–2018R into the DOE test procedure. For these same reasons, DOE has tentatively determined that any test data for CRE currently available on the market are expected to be consistent with the proposed test procedure.

DOE requests comment on its proposal to incorporate by reference ASHRAE 72–2018R, including on whether the updates included in the industry test standard would impact the measured energy consumption of any CRE currently available.

In response to the June 2021 RFI, Hoshizaki recommended that the ASHRAE 72 committee review the testing with drawers and determine the requirements for loading of drawers, opening of drawers, and sequence of such actions. (Hoshizaki, No. 13, p. 3) DOE understands that the ASHRAE 72 committee is reviewing test procedures for CRE with drawers to consider whether additional direction is needed.

Section 1.3.16 of appendix B of the DOE test procedure specifies that drawers are to be treated as identical to doors when conducting the DOE test procedure, and that drawers should be configured with the drawer pans that allow for the maximum packing of test simulators and filler packages without the filler packages and test simulators exceeding 90 percent of the refrigerated volume. Packing of test simulators and filler packages must be in accordance with the requirements for commercial refrigerators without shelves, as specified in Section 6.2.3 of ASHRAE 72–2005. Section 1.3.16 of appendix B.

CRE with drawers are typically configured to hold standardized food pans for food storage. Pans loaded into the drawers are not typically filled with food above the top edge of the pan to prevent spilling or interfering with other drawers. Additionally, these CRE may require the space above the pans to be unloaded to allow for air circulation within the cabinet.

The current DOE test procedure instructions do not specify any test simulator or filler package load limits for the pans, other than not exceeding 90 percent of the refrigerated volume. For other CRE tests, ASHRAE 72–2005 and ASHRAE 72–2018R specify test simulator and filler package loading based on net usable volume (*i.e.,* the volume of interior usable space intended for refrigerated storage or display, specifically consisting of the usable interior volume within the claimed load limit boundaries; see Section 3 of ASHRAE 72–2005) rather than refrigerated volume. See Section 5.4.2 of ASHRAE 72–2018R and Section 6.2.5 of ASHRAE 72–2005. Loading based on the net usable volume accounts for load limits within the CRE and would prevent overloading a CRE to the extent that could impact airflow circulation within the cabinet.

To ensure consistent testing for CRE with drawers, and to allow for testing that is most representative of typical use, DOE is proposing to specify in appendix B that CRE with drawers be tested according to the existing requirements with the additional instruction that, for the purposes of loading pans in drawers, the net usable volume is the storage volume of the pans up to the top edge of the pan.

The drawer loading instructions in appendix B reference Section 6.2.3 of ASHRAE 72–2005, which specifies instructions for loading compartments without shelves. Specifically, section 6.2.3 requires situating test simulators at the left and right ends (*i.e.,* sides), at the front and back, and top and bottom locations of the compartment. To make explicit the application of this instruction to standardized food pans, DOE is proposing to require that test simulators be placed at the corner locations of each pan. For any pans not wide or deep enough to allow for test simulators at each corner (*i.e.,* less than 7.5 inches wide or deep, based on the 3.75 inch test simulator width), DOE is

proposing that the test simulators would be centered along the width or depth accordingly. Similarly, for any pans not tall enough to allow for test simulators at the specified top and bottom locations (*i.e.,* pans less than 4 inches tall, based on the 2 inch test simulator height), DOE is proposing that a test simulator only be loaded at the specified top location within the standardized food pan.

DOE requests comment on the proposed additional instructions regarding loading drawers. DOE requests information on whether the proposed approach is consistent with any future industry standard revisions to address this issue. DOE requests comment on whether other instructions for CRE with drawers should be revised (*e.g.,* fully open definition for drawers) or if additional instructions are needed.

3. Secondary Coolants

Certain CRE are installed for use with a secondary coolant. In this configuration, a remotely cooled fluid (*e.g.,* a propylene glycol solution) is supplied to the cabinet and absorbs heat from the cabinet without the secondary coolant undergoing a phase change.

AHRI publishes a rating standard that is applicable to CRE that use a secondary coolant or refrigerant, AHRI Standard 1320 (I–P), ''2011 Standard for Performance Rating of Commercial Refrigerated Display Merchandisers and Storage Cabinets for Use With Secondary Refrigerants,'' (''AHRI 1320–2011''), approved by ANSI on April 17, 2012. AHRI 1320–2011 is applicable to CRE that are equipped and designed to work with electrically driven, medium-temperature, single-phase secondary coolant systems, but excludes equipment used for low-temperature applications, secondary coolants involving a phase change (*e.g.,* ice slurries or carbon dioxide), and self-contained CRE. AHRI 1320–2011 includes similar rating temperature conditions as those in AHRI 1200–2013 and references ASHRAE 72–2005 and AHAM HRF–1–2008 for the measurement of energy consumption and calculation of refrigerated volume, respectively. The only substantive differences between AHRI 1200–2013 and AHRI 1320–2011 are the inclusion of secondary refrigerant circulation pump energy consumption in the calculation of total daily energy consumption and revised coefficients of performance to determine compressor energy consumption.

In the June 2021 RFI, DOE requested comment on whether AHRI 1320–2011 would be an appropriate test method to measure the total daily energy consumption of CRE that use a secondary refrigerant circuit, and whether it would provide representative measurements of energy use. 86 FR 31182, 31185. DOE also sought information and data on CRE designed to work with electrically driven, medium-temperature, single-phase secondary coolant systems, including the typical field installations and operating conditions. *Id.*

AHRI and Hussmann commented that AHRI 1320–2011 is due to begin revisions as soon as the updated AHRI 1200–202X completes the review cycle, and that the updated AHRI 1320 standard will then cover the applicable secondary coolant systems and would be an appropriate test method to measure the total daily energy consumption of CRE that use a secondary refrigerant circuit. (AHRI, No. 3, p. 4; Hussmann, No. 14, p. 5)

DOE also requested comment on whether manufacturers sell or plan to sell CRE with secondary coolant that would be outside the stated applicability of AHRI 1320–2011, including low-temperature equipment or CRE using secondary coolants with a phase change (*e.g.,* ice slurries or carbon dioxide), and on whether any other existing test standards are appropriate for rating such equipment. *Id.*

Hussmann commented that they are not aware of any equipment with secondary coolant that would be outside the stated applicability of AHRI 1320–2011. (Hussmann, No. 14, p. 6)

IGSD commented in support of DOE considering AHRI 1320–2011 for secondary coolant systems, stating that studies have found that these systems can consume just as much or less energy than systems that do not, with the added benefit of using low-global warming potential (''GWP'') refrigerants. (IGSD, No. 7, p. 1)

AHRI and Arneg commented that the use of secondary coolants is requested by few end users and diminishing in number sold on the market, including for phase change systems using CO_2. (AHRI, No. 3, p. 4; Arneg, No. 12, p. 1) Arneg commented that regulatory emphasis should be placed on other types of equipment. AHRI commented that it is not aware of any standards that measure the energy use of CO_2 with pumped overfeed phase change systems. (Id.)

AHRI commented that regardless of the cooling medium, the display case will generally require the same amount of cooling. (AHRI, No. 3, p. 4)

While CRE cooled by secondary coolants are less common than self-contained or remote CRE, DOE is proposing to incorporate by reference AHRI 1320–2011 to provide a method for testing and rating the energy use of such CRE. As stated, the only substantive difference between AHRI 1200–2013 and AHRI 1320–2011 is the inclusion of secondary refrigerant circulation pump energy consumption in the calculation of total daily energy consumption.

DOE is proposing to incorporate by reference AHRI 1320–2011 for testing CRE used with secondary coolants and to reference only the specific sections within the standard that apply to CRE tested with secondary coolants (*i.e.,* those referring to pump energy and coolant flow) and to otherwise reference the applicable requirements in AHRI 1200–202X. DOE understands that AHRI 1320–2011 may be updated consistent with the updates in AHRI 1200–202X. DOE would consider the updated version of AHRI 1320–2011 if it is available at the time of any subsequent final rule to establish amended DOE test procedures for CRE.

Because CRE cooled by secondary coolants are not currently subject to DOE's test procedure, DOE is proposing that the test procedure referencing AHRI 1320–2011 would not be required for use until the compliance date of any amended energy conservation standards for CRE that consider such testing. DOE is aware that direct-expansion remote CRE may also be capable of being installed with a secondary coolant. Under this proposal, such equipment would continue to be tested and rated using the approach currently required for remote condensing CRE. The test procedure for secondary coolants proposed in this NOPR would be applicable to equipment only capable of being installed with secondary coolants, should any such models become available.

DOE requests comment on the proposal to incorporate by reference AHRI 1320–2011 for CRE used with secondary coolants, including the proposal to only reference the industry standard for provisions specific to secondary coolants and to otherwise reference AHRI 1200–202X, as proposed for other CRE.

4. International Standards Development

IGSD commented that the United for Efficiency public private partnership, under the leadership of the United Nations Environment Program, developed model regulation guidelines for CRE,[11] which IGSD suggested may

[11] Available at *united4efficiency.org/resources/model-regulation-guidelines-for-energy-efficient-and-climate-friendly-commercial-refrigeration-equipment/.*

contain information of interest to DOE. (IGSD, No. 7, p. 3)

DOE has reviewed the model regulation guidelines for CRE and recognizes the potential benefit of international harmonization and of providing an example framework for regulations to facilitate establishing them for jurisdictions where they are not yet in place. The model regulation guidelines include scope of coverage, definitions, test procedures, energy consumption requirements, additional equipment regulations, and verification guidelines. The definitions and test procedures referenced in the guidelines are not consistent with the scope, definitions, and test procedures established by DOE under EPCA. DOE has tentatively determined that requiring the approach as specified in the model regulation guidelines would represent a significant burden to the CRE industry while not resulting in test procedures that are more representative of average use of CRE.

DOE is additionally proposing to define certain CRE and applicable test procedure provisions for equipment that is outside of the scope of the model regulation guidelines—*e.g.,* high-temperature refrigerators, blast chillers and blast freezers. The model regulation guidelines do not present an opportunity to harmonize test procedures with such CRE.

For the reasons stated in the preceding paragraph, DOE is not proposing to adopt the model regulation guidelines.

DOE requests comment on the model regulation guidelines and on whether there are opportunities for DOE to harmonize its regulations with other regulations in place for CRE.

C. Test Conditions for Specific CRE Categories

DOE has identified specific categories of CRE that are not currently subject to the DOE test procedure or that the current test procedure may not produce results that are representative of their use. Additionally, the U.S. Environmental Protection Agency (''EPA'') ENERGY STAR program considered three of these equipment categories for scope expansion and test method development during the Version 5.0 Specification development process: Refrigerated preparation and buffet tables; chef bases or griddle stands; and blast chillers and freezers.[12] DOE has considered information gathered through the ENERGY STAR process when developing the proposals included in this NOPR.

In response to the June 2021 RFI, the Joint Commenters and CA IOUs commented in support of developing test methods for salad bars, buffet tables, and refrigerated preparation tables; blast chillers and blast freezers; chef bases and griddle stands; and mobile refrigerated cabinets. (Joint Commenters, No. 8, p. 2; CA IOUs, No. 10, p. 1) The Joint Commenters commented in support of the test methods to allow for comparable efficiency information across models and to allow the consideration of both DOE and ENERGY STAR specifications for this equipment. (Joint Commenters, No. 8, p. 2) NEEA recommended that DOE align CRE test methods for these categories with the ENERGY STAR Commercial Refrigerators and Freezers Specification Version 5.0.[13] (NEEA, No. 5, p. 3)

DOE discusses each of these categories in the following sections.

1. Salad Bars, Buffet Tables and Refrigerated Preparation Tables

Salad bars, buffet tables, and other refrigerated holding and serving equipment, including refrigerated preparation tables,[14] are CRE that store and display perishable items temporarily during food preparation or service. These units typically have design attributes, such as easily accessible or open bins that allow convenient and unimpeded access to the refrigerated products, which make them unique from CRE designed for storage or retailing. In the April 2014 Final Rule, DOE did not establish test procedures for this equipment, but maintained that this equipment meets the definition of CRE and is covered equipment that could be subject to future test procedures and energy conservation standards. 79 FR 22277, 22281. In the June 2021 RFI, DOE considered definitions and test procedures applicable to salad bars, buffet tables, and refrigerated preparation tables. DOE also requested information on other refrigerated holding and serving equipment, including definitions and appropriate test procedures.

NEEA and the CA IOUs commented generally in support of DOE developing test procedures for refrigerated salad bars, buffet tables, and preparation tables. (NEEA, No. 5, p. 3; CA IOUs, No. 10, p. 3)

a. Definitions

In the June 2021 RFI, DOE noted that ASTM International F2143–16 ''Standard Test Method for Performance of Refrigerated Buffet and Preparation Tables'' (''ASTM F2143–16'') provides the following definitions for refrigerated buffet and preparation tables:

- *Refrigerated buffet and preparation table*—equipment designed with a refrigerated open top or open condiment rail.
- *Refrigerated buffet table or unit*—equipment designed with mechanical refrigeration that is intended to receive refrigerated food and maintain food product temperatures and is intended for customer service such as a salad bar. A unit may or may not be equipped with a lower refrigerated compartment.
- *Refrigerated food preparation unit*—equipment designed with a refrigerated open top or open condiment rail such as refrigerated sandwich units, pizza preparation tables, and similar equipment. The unit may or may not be equipped with a lower refrigerated compartment.

86 FR 31182, 31185–31186. DOE noted that certain terms used within these definitions are undefined (*e.g.,* condiment rails, food product temperatures). *Id.* DOE additionally noted that it was not aware of any other industry standard definitions for these equipment. *Id.*

DOE additionally notes that the California Code of Regulations (''CCR'')[15] defines ''buffet table'' and ''preparation table'' as follows:

- ''Buffet table'' means a commercial refrigerator, such as a salad bar, that is designed with mechanical refrigeration and that is intended to receive refrigerated food, to maintain food product temperatures, and for customer service; and
- ''Preparation table'' means a commercial refrigerator with a countertop refrigerated compartment with or without cabinets below, and with self-contained refrigeration equipment. 20 CCR § 1602.

[12] Information and materials for ENERGY STAR's Specification Version 5.0 process are available at *www.energystar.gov/products/spec/commercial_refrigerators_and_freezers_specification_version_5_0_pd.*

[13] EPA's ENERGY STAR program released a Final Draft Version 5.0 Eligibility Criteria for commercial refrigerators and freezers on January 19, 2022. For information on the Version 5.0 specification development, see *www.energystar.gov/products/spec/commercial_refrigerators_and_freezers_specification_version_5_0_pd.*

[14] While the April 2014 Final Rule did not specifically refer to refrigerated preparation tables, DOE is including them in this category because they have similar features to salad bars and buffet tables. Each of these equipment categories includes an open top area for holding refrigerated pans and is used during food preparation and service.

[15] California's regulations for buffet tables and preparation tables refer to the 2001 version of ASTM F2143. DOE has reviewed ASTM F2143–16 for this NOPR as it is the most current version of the standard.

Furthermore, EPA's ENERGY STAR program's Final Draft Version 5.0 Eligibility Criteria for commercial refrigerators and freezers includes a definition for ''preparation or buffet table'' as a commercial refrigerator, freezer, or refrigerator-freezer with a food condiment rail designed to hold open perishable food and may or may not be equipped with a lower compartment that may or may not be refrigerated.

In the June 2021 RFI, DOE requested information on the suitability of the ASTM F2143–16 definitions for refrigerated buffet and preparation tables (and also their applicability to salad bars) as potential regulatory definitions for this equipment. 86 FR 31182, 31186. DOE also requested comment on whether any further delineation would be necessary to account for the range of performance related features available in this equipment (*e.g.,* presence of pan covers, refrigerated storage compartments, and any other unique configurations or features that may require consideration for any potential test procedures). DOE further requested comment on the specific features and equipment capabilities that should be included in definitions for refrigerated salad bars, buffet tables, and preparation tables. *Id.* For example, DOE sought information on the factors that would differentiate this equipment from other typical CRE. *Id.* DOE also requested comment on whether potential definitions should specify temperature operating ranges, and if so, what the appropriate ranges would be. *Id.*

In the June 2021 RFI, DOE also noted that the configuration of salad bars, buffet tables, and refrigerated preparation tables may raise questions as to whether a unit is commercial hybrid refrigeration equipment. *Id.* DOE defines ''commercial hybrid refrigeration equipment'' as a unit of CRE (1) that consists of two or more thermally separated refrigerated compartments that are in two or more different equipment families, and (2) that is sold as a single unit. 10 CFR 431.62.

DOE discussed in the June 2021 RFI that additional detail may be necessary to distinguish between a unit that is a salad bar, buffet table, or refrigerated preparation table and a unit that is commercial hybrid equipment that includes a salad bar, buffet table, or refrigerated preparation table. 86 FR 31182, 31186. Refrigerated salad bars, buffet tables, and preparation tables typically have removable pans or bins that directly contact the chilled air in the refrigerated compartment of the unit. With that configuration, the entirety of the chilled compartment and surface pans would potentially be considered a refrigerated salad bar, buffet table, or preparation table. In contrast, if a unit includes solid partitions between the chilled compartment and the pans or bins on top of the unit, such a configuration would potentially be considered thermal separation and the unit would be considered a commercial hybrid consisting of a refrigerated salad bar, buffet table, or preparation table with a refrigerator and/or freezer.

DOE requested comment on whether the presence of thermally separating partitions should be considered as a factor to differentiate between (a) refrigerated salad bars, buffet tables, and preparation tables; and (b) commercial hybrid units consisting of a refrigerated salad bar, buffet table, or preparation table with a refrigerator and/or freezer. *Id.*

AHRI commented that salad bars and buffet tables are generally self-service equipment, whereas preparation tables are store-service equipment, stating that service could be either employee or customer operated for salad bars, condiment rails, *etc.* (AHRI, No. 3, p. 5)

AHRI and Continental commented that buffet and preparation tables often have upsized refrigeration systems with larger compressors, larger evaporators, additional fans, and modified or specialized air flow patterns to maintain food-safe temperatures in the open pans. (AHRI, No. 3, p. 5; Continental, No. 6, p. 2) ITW commented that long-term stability required by operators increases the demand for refrigeration system capacity. (ITW, No. 2, p. 3)

AHRI and Hussmann commented that the definition for ''Refrigerated Buffet and Preparation Table'' should be split to better define each unique case type, with ''open top'' and ''open condiment rail'' also being defined. (AHRI, No. 3, p. 4–5; Hussmann, No. 14, p. 6) AHRI and Hussmann commented that the definition for ''refrigerated food preparation unit'' should be clearly defined since the definition is similar to ''refrigerated buffet and preparation table.'' (*Id.*)

AHRI and Hussmann further commented that the ASTM definition for ''refrigerated buffet table or unit'' states that the unit is intended to receive refrigerated food and maintain food product temperatures and is intended for customer service such as a salad bar, and that the ''refrigerated food'' temperature should be included in the definition as well as the temperature at which the food must be maintained and for an expected duration. (AHRI, No. 3, p. 4–5; Hussmann, No. 14, p. 6)

Hoshizaki commented that the ability to have cooled products in pans on the top and a refrigerated section below the pans in one unit is a feature of preparation tables. (Hoshizaki, No. 13, p. 1) Hoshizaki commented that refrigerated preparation tables are already defined in NSF International (''NSF'') [16]/ANSI 7–2019, ''Commercial Refrigerators and Freezers,'' (''NSF 7–2019'') and ASTM F2143–16 and suggested that DOE utilize the current definitions of those products.[17] (*Id.*)

True, ITW, and Continental commented in support of using NSF 7–2019 (defined within NSF/ANSI 170–2019,[18] ''Glossary of Food Equipment Terminology,'' (''NSF 170–2019'')), ''Commercial Refrigerators and Freezers'' definitions, which defines ''Refrigerated Buffet Units'' and ''Refrigerated Food Preparation Units'' with ''open display area'' and also ''open-top refrigerated equipment.'' (True, No. 4, p 6–7; ITW, No. 2, p. 2–3; Continental, No. 6, p. 1)

ITW recommended the definitions based on NSF 7–2019 for: ''refrigerated buffet units (salad bars),'' ''refrigerated food preparation units (tables).'' (ITW, No. 2, p. 2–3) ITW commented that refrigerated buffet units (salad bars) could be viewed as open-top storage ''like'' cabinets with modifiable features, but that food preparation units (tables) are designed around specific applications (*e.g.,* salads, pizzas, sandwiches, grilling, *etc.*), such that a single overarching cabinet design cannot meet the specific needs of the end user. (ITW, No. 2, p. 3) ITW questioned if there is any value in regulating units without an integrated storage compartment, stating that there is minimal power consumption, installation base, and shorter daily operating hours for such units. (ITW, No. 2, p. 7)

Regarding whether potential definitions should specify temperature operating ranges, and if so, what the appropriate ranges would be, ITW, AHRI, True, and Continental

[16] Founded in 1944 as the National Sanitation Foundation, the organization changed its name to NSF International in 1990.

[17] Hoshizaki did not include a specific version of NSF 7 in their comments. DOE assumes Hoshizaki was referencing the latest version available at the time of comment (*i.e.,* the 2019 version).

[18] A specific version of NSF 170 was not referenced by commenters. DOE assumed commenters referenced the 2019 version of NSF 170 associated with NSF 7–2019. DOE notes there is an updated 2021 version that published September 1, 2021, after the June 2021 RFI comment period ended, but DOE determined there are no updates in this version that would impact the comments received.

commented that the food safety temperature is between 33 °F and 41 °F (further specified for open pan versus lower refrigerated area in NSF 7–2019) with the lids open and covers removed for a specified period of time, which AHRI noted is 4 hours per NSF 7–2019. (ITW, No. 2, p. 3; AHRI, No. 3, p. 5; True, No. 4, p. 8; Continental, No. 6, p. 2)

Regarding whether the presence of thermally separated compartments differentiates units that are refrigerated salad bars, buffet tables, and preparation tables from units that are commercial hybrid units, the CA IOUs commented that a single-compressor, self-contained condenser product with top and bottom compartments that are not thermally separated are the predominant configuration for refrigerated preparation tables, as they can be used in a variety of kitchen and food service environments. (CA IOUs No. 10, p. 3)

AHRI commented that some systems may share a coil between a prep or buffet station and a display or storage case already covered by DOE regulations. (AHRI, No. 3, p. 5) Hussmann commented that ''multi-zone'' units should be defined for a clear understanding of equipment that may/may not share a coil between the prep/buffet section of a case and another section of the case that is already covered under an existing DOE category. (Hussmann, No. 14, p. 7) Hussmann and AHRI commented that the ''lower refrigerated compartment'' should be clearly defined as having either the same or separate coil. (Hussmann, No. 14, p. 6; AHRI, No. 3, p. 4–5)

Hussmann, AHRI, True, and ITW commented that thermally separating partitions should not be considered a factor in differentiating equipment type. (Hussmann, No. 14, p. 8; AHRI, No. 3, p. 5–6; True, No. 4, p. 8; ITW, No. 2, p. 3) ITW commented that thermally separating partitions do improve temperature stability between two areas but do not significantly change the heat load on the cabinet. (ITW, No. 2, p. 3)

True commented that a unit should contain a complete refrigeration [unit] for each section for it to be considered ''commercial hybrid.'' (True, No. 4, p. 8) True commented that a unit containing two thermally separated refrigerated compartments with one common condensing unit should not be considered a hybrid unit. (*Id.*)

Regarding whether any further delineation is necessary to account for the range of performance related features available in this equipment, Hussmann commented that there should be definitions for different types of hybrid equipment, including: refrigerated buffet or prep table sharing a coil with a refrigerated compartment that is already covered by the DOE; refrigerated equipment that may split a single cooling zone between condiment rails, prep surfaces, pans with lids, pans without lids, non-critical temperature wells, etc.; equipment with wells that can switch from refrigerated to heated; and equipment intended to be used with different sized pans on the same rail. (Hussmann, No. 14, p. 7)

Hussmann commented that the condiment and self-service zones may not be thermally separated but should still be considered a hybrid unit. (Hussmann, No. 14, p. 8) AHRI commented that equipment can incorporate frozen, cold, and hot food storage without thermally separated compartments and these systems should be considered hybrid refrigeration units. (AHRI, No. 3, p. 5–6) Hussmann commented that further definition would be needed for refrigerated preparation tops that require colder temperatures such as sushi or ice cream. (Hussmann, No. 14, p. 6–7)

ITW commented that the thermal heat load of open-top refrigeration equipment with an integral storage compartment is influenced by its physical characteristics, including the following: (1) condiment pan area (TDA) and configuration (slope vs flat, cold wall vs forced air vs glycol), (2) lid or cover design, (3) storage cabinet volume, (4) door or drawer design and configuration, and (5) the flow path of room air entering and leaving the condenser coil. (ITW, No. 2, p. 3) ITW also commented that refrigerated buffet tables and food preparation tables require equipment categorization by how their contents are displayed, either horizontal or semi-vertical. (*Id.*) ITW commented that this presentation angle affects the stability of the chilled air blanket above the product, with a greater angle causing a decrease in stability and increase in energy consumption. (*Id.*) ITW further commented that refrigerated food preparation units (tables) should be subcategorized by end application use and their ability to hold potentially hazardous food items at food safe temperatures. (*Id.*)

The comments from interested parties in response to the June 2021 RFI generally indicated support either for the definitions in the ASTM F2143–16 standard, as presented earlier in this section, or based on NSF 7–2019 (by reference to NSF 170–2019). Comments from interested parties; existing industry, State, and Federal definitions; and DOE's review of equipment available on the market indicate that the primary characteristic that differentiates salad bars, buffet tables, and refrigerated preparation tables from other types of CRE is the open-top refrigerated area (with or without lids) that allows access to pans or other removable containers that display or store merchandise and other perishable materials for customers or food preparation staff during food preparation or service. The merchandise and other perishable materials are only displayed or stored in pans or other removable containers when loaded into the open-top refrigerated area of this equipment (*i.e.,* the open-top refrigerated area does not provide for any display or storage outside of the pans or other removable containers). Additionally, the equipment can include other refrigerated compartments, either as an integrated combined refrigerated space (*i.e.,* the pans or other removable containers loaded in the open-top refrigerated area are in direct contact with the refrigerated compartment), or with thermal separation between the open-top refrigerated area and refrigerated compartments.

To delineate this equipment from other types of CRE, DOE is proposing to define the term ''buffet table or preparation table''. DOE is proposing a definition for this term that combines elements of the existing industry and ENERGY STAR definitions, includes language for consistency with DOE's existing CRE definitions, and includes further specificity regarding the characteristics of this equipment. Specifically, DOE is proposing to define this term as follows:

''Buffet table or preparation table'' means a commercial refrigerator with an open-top refrigerated area, that may or may not include a lid, for displaying or storing merchandise and other perishable materials in pans or other removable containers for customer self-service or food production and assembly. The unit may or may not be equipped with a refrigerated storage compartment underneath the pans or other removable containers that is not thermally separated from the open-top refrigerated area.

DOE is not proposing to define the term ''salad bar,'' as this equipment would be captured within the proposed definition of ''buffet table or preparation table.'' DOE has tentatively determined that additional equipment definitions are not necessary for the purposes of testing buffet tables and preparation tables as proposed in this NOPR.

Additionally, DOE has not proposed any reference to temperature storage temperature or duration in the proposed buffet table or preparation table

definition. DOE recognizes that these are important aspects of the equipment operation but has tentatively determined that they are not necessary for the purpose of defining the equipment to establish test procedures. By specifying that such units are commercial refrigerators, buffet tables and preparation tables would be units capable of operating at or above 32 °F (±2 °F).

As discussed, CRE may include single refrigeration systems to provide cooling to multiple compartments or areas within a unit. Additionally, CRE may include multiple distinct refrigeration systems or evaporator coils to individually cool separate compartments or refrigerated areas. DOE's proposed definition would include units both with and without a refrigerated storage compartment underneath the pans or other removable containers. The proposed definition, however, specifies that units including a refrigerated storage compartment underneath the pans or other removable containers may not be thermally separated from the open-top refrigerated area.

DOE notes that while industry may use the term ''hybrid'' to refer to different combinations of equipment capabilities and configurations, the term ''commercial hybrid'' is specifically defined by DOE in 10 CFR 431.62 as discussed earlier in this section. Currently, CRE with refrigerated storage compartments thermally separated from the open-top refrigerated area of the buffet table or preparation table are ''commercial hybrid'' CRE and must be tested in accordance with the applicable test procedures and comply with the applicable standards. Such equipment would continue to be tested as currently required to determine compliance with the existing energy conservation standards applicable to the non-buffet table or preparation table element. As noted, DOE has not established energy conservation standards for CRE covered under the proposed definition of buffet table or preparation table. DOE discussed in the April 2014 Final Rule that because only the refrigerated storage compartment is subject to current energy conservation standards, the unit would be tested with the buffet table or preparation table portion disabled and not included in the determination of energy consumption. 79 FR 22277, 22289. If the same refrigeration system serves both the refrigerated compartment and the open-top refrigerated area and refrigeration of the open-top area cannot be disabled, manufacturers may apply for a test procedure waiver for such equipment if the measured energy use would not be representative of the portion of the unit that is not a buffet table or preparation table of the CRE basic model. *Id.*

Many of the comments received from interested parties reference the impact on buffet table or preparation table design on overall measured energy use. DOE acknowledges that the configuration, capability, and operation of this equipment can vary depending on application. However, for the purposes of proposing test procedures, DOE has initially determined that additional equipment definitions are not necessary. The definition for buffet table or preparation table as proposed in this NOPR would identify the equipment subject to the proposed test procedure, which, as discussed in the following section, would include general instructions for test setup and conduct that would be applicable to the equipment configurations identified in comments from interested parties.

To the extent that the equipment configurations and capabilities of buffet tables or preparation tables may impact measured energy use, DOE would consider such impacts were it to consider energy conservation standards for such equipment. Specifically, a rule prescribing an energy conservation standard for a type (or class) of covered products must specify a level of energy use or efficiency higher or lower than that which applies (or would apply) for such type (or class) for any group of covered products which have the same function or intended use, if the Secretary determines that covered products within such group—(A) consume a different kind of energy from that consumed by other covered products within such type (or class); or (B) have a capacity or other performance-related feature which other products within such type (or class) do not have and such feature justifies a higher or lower standard from that which applies (or will apply) to other products within such type (or class). (42 U.S.C. 6316(e)(1); 42 U.S.C. 6295(q)) In making a determination concerning whether a performance-related feature justifies the establishment of a higher or lower standard, the Secretary must consider such factors as the utility to the consumer of such a feature, and such other factors as the Secretary deems appropriate. (*Id.*)

DOE requests comment on the proposed definition for buffet table or preparation table. DOE requests information on whether any additional definitions are necessary for the purposes of testing this equipment, or whether any additional equipment characteristics are necessary to differentiate this equipment from other categories of CRE.

b. Test Methods

In considering potential test methods for buffet tables and preparation tables, DOE reviewed ASTM F2143–16 and identified several differences between this test method and DOE's current test procedure for CRE, as discussed in the June 2021 RFI. 86 FR 31182, 31186–31188. DOE requested comment on specific test procedure provisions in ASTM F2143–16 and how they relate to other requirements in the current DOE test procedure. 86 FR 31182, 31188. As discussed in the following paragraphs, DOE received comments on the general test approaches that may be appropriate for buffet tables and preparation tables.

NEEA and the CA IOUs commented that a report created by Southern California Edison discussed testing on eight different refrigerated preparation tables from six manufacturers using ASTM F2143–16 that showed a range of performance, with the least efficient product tested using twice as much energy per day per volume. (NEEA, No. 5, p. 3–4; CA IOUs, No. 10, p. 3)

Hoshizaki commented that it has utilized ASTM F2143–16 for its preparation tables to list with the California Energy Commission (''CEC'') and support DOE adoption of this standard. (Hoshizaki, No. 13, p. 1)

AHRI commented that there are many customizable appurtenances for this equipment, and that ASTM F2143–16 captures the base model distinctions to some degree but does not clearly distinguish between product categories and may lead to overlap between categories. (AHRI, No. 3, p. 4–5) AHRI also commented that self-contained versus remote applications would need to be considered. (AHRI, No. 3, p. 5)

Hussmann commented that ASTM F2143–16 includes only self-contained products and seeks clarification from DOE whether remote cases are intended to be covered as buffet tables and preparation tables. (Hussmann, No. 14, p. 7)

True commented that ASTM F2143–16 is not the correct industry standard to reference for buffet tables and preparation tables, asserting that it is not used by the food service industry, would add additional burden to overextended labs, and is not robust enough to withstand scrutiny. (True, No. 4, p. 6–7) True commented that NSF 7–2019 is the correct standard to be used instead of ASTM F2143–16 because, for at least the last 30 years, the three categories (refrigerated buffet and preparation table, refrigerated buffet table or unit, refrigerated food prep unit)

have been defined and tested according to NSF 7–2019 (defined within NSF 170–2019) and it is the standard followed by the CRE industry. (*Id.*) True commented that state and local health departments enforce health codes based on NSF 7–2019 when they test for food safety. (*Id.*)

DOE reviewed both ASTM F2143–16 and NSF 7–2019 in considering test methods for buffet tables and preparation tables. As described in section 1 of ASTM F2143–16 (''Scope''), that test method covers evaluation of the energy consumption of refrigerated buffet and preparation tables and allows food service operators to use this evaluation to select a refrigerated buffet and preparation table and understand its energy performance. The foreword to NSF 7–2019 specifies that the purpose of the industry testing standard is to establish minimum food protection and sanitation requirements for the materials, design, construction, and performance of commercial refrigerators and freezers.

The general test approach in ASTM F2143–16 is to load the unit with distilled water in pans and no load in any refrigerated compartment, operate the unit to confirm stability, then conduct testing for 24 hours, with an eight hour ''active period'' with lid and door openings followed by a 16 hour ''standby period'' with no door openings. DOE understands that this test is intended to represent unit operation and energy consumption over a day.

The NSF 7–2019 test approach requires loading the unit pans with refrigerated food-simulating test media (a specified mixture of water, salt, and hydroxypropyl methylcellulose) and no load in any refrigerated compartment and operating the unit for four hours to determine whether temperatures at all measured locations are within the acceptable range. DOE understands that this test is intended to evaluate the ability of a unit to maintain the temperature of refrigerated pans (and any compartments) during a four-hour period.

While these two industry test methods contain certain similarities—*e.g.,* loading pans but not compartments, ambient temperature conditions—DOE has initially determined that ASTM F2143–16 provides the more appropriate basis for an energy consumption test that is representative of typical use. As discussed in more detail in the following sub-sections, DOE has initially determined that 24-hours of maintaining stable temperatures, as required in the ASTM F2143–16 method, is representative of average use for this equipment. DOE has also tentatively determined that the stabilization and operating periods specified in ASTM F2143–16 would ensure that units are maintaining temperatures on a consistent basis during testing and would allow for comparative energy use measurements across units. NSF 7–2019 provides a basis for determining whether a unit is capable of maintaining certain temperatures over a shorter period, but without additional instructions to ensure energy consumption testing on a consistent basis—*i.e.,* the temperatures maintained over the shorter test period may not necessarily be stable.

For these reasons, DOE is proposing to reference ASTM F2134–16 as the basis for testing buffet tables and preparation tables. Consistent with the scope of ASTM F2134–16, DOE is proposing test procedures only for self-contained buffet tables and preparation tables. While DOE is proposing to base the test procedure for buffet tables and preparation tables on ASTM F2134–16, DOE is also proposing certain additional and different requirements for test conditions, setup, and conduct, to ensure the representativeness of the test procedure, as discussed in the following sections.

To avoid confusion regarding testing of other CRE, DOE is also proposing to establish the test procedure for buffet tables and preparation tables as a new appendix C to subpart C of 10 CFR part 431. DOE is also proposing to refer to the proposed appendix C as the test procedure for buffet tables and preparation tables in 10 CFR 431.64.

DOE requests comment on its proposal to adopt through reference certain provisions of ASTM F2143–16 as the basis for testing buffet tables and preparation tables. DOE also seeks comment on the proposal to specify test procedures only for self-contained buffet tables and preparation tables, consistent with ASTM F2143–16.

Test Conditions

ASTM F2143–16 specifies different rating conditions for test room dry-bulb temperature and moisture content than the current DOE test procedure. NSF 7–2019 also specifies test conditions similar to those in ASTM F2143–16. Table III.1 summarizes these differences.

TABLE III.1—TEST ROOM DRY-BULB TEMPERATURE & MOISTURE CONTENT STANDARDS COMPARISON

Equipment type	Test standard	Test room dry bulb temperature	Wet bulb temperature (relative humidity)	Moisture content (lb/lb dry air)
Currently Covered CRE	ASHRAE 72 (2005 and 2018R)	75.2 °F ± 1.8 °F	64.4 °F ± 1.8 °F (49–62 percent)	0.009–0.011.
Buffet and Preparation Tables	ASTM F2143–16	86 °F ± 2 °F	66.2 °F ± 1.8 °F (30–40 percent)	0.008–0.010.
Buffet and Preparation Tables	NSF 7–2019	86 °F ± 2 °F	Max 72 °F (based on max 50 percent).	Max 0.013.

In the June 2021 RFI, DOE requested comment and supporting data on test room dry-bulb temperature and moisture content typically experienced by buffet tables and preparation tables operating in the field. 86 FR 31182, 31186. DOE requested comment on whether these conditions are significantly different from those encountered by conventional CRE and would justify adopting separate rating conditions for buffet tables and preparation tables. *Id.*

ITW and Hussmann commented in support of the current ASHRAE 72–2018 test condition. (ITW, No. 2, p. 4; Hussmann, No. 14, p. 8) Hussmann commented that adopting ASTM F2143–16 would add burden on manufacturers, who would be required to test at two different dry-bulb temperatures for hybrid equipment. (Hussmann, No. 14, p. 8) ITW commented that manufacturers and test laboratories have invested significant effort to assemble laboratories and environmental chambers to hold tight tolerances around the ASHRAE 72–2018 test conditions. (ITW, No. 2, p. 4)

The CA IOUs commented in support of DOE aligning with the higher temperature and more humid ambient test conditions used in ASTM F2143–16 for refrigerated preparation and buffet tables, stating that these products are

often found in similar spaces as chef bases, including commercial kitchens. (CA IOUs, No. 10, p. 3–4)

ITW commented that the performance requirements and installation sites for refrigerated buffet (salad bars) and food preparation tables are comparable to existing CRE and do not require different environmental conditions for a representative energy evaluation. (ITW, No. 2, p. 4) ITW commented that most units are in proximity to the customer dining area, where ambient conditions are controlled at or below the ASHRAE 72–2018 specification, stating that dew points typically fall into the mid-40s °F and dry bulb temperatures average 72 °F. (*Id.*)

Hoshizaki commented that ambient temperature, moisture content, and elevation vary across the country, with ambient temperatures ranging from 70 to 100 °F and humidity ranging from 30 to 80 percent. (Hoshizaki, No. 13, p. 1) Arneg commented that field conditions vary widely, but that restaurants and supermarkets consistently maintain the 75 °F (dry bulb) and 55 °F (wet bulb) condition; and convenience stores usually have higher ambient conditions (*i.e.,* 80 °F dry bulb). (Arneg, No. 12, p. 1)

True and AHRI commented in support of the NSF 7–2019 test conditions (86 °F ± 2 °F, maximum relative humidity of 50 percent). (True, No. 4, p. 9; AHRI, No. 3, p. 6) True argued there is no such thing as a ''real world'' energy test. (True, No. 4, p. 13) True stated that they currently test vertical closed refrigerators and freezers at ASHRAE 72–2005 test conditions (75 °F ambient temperature, 55 percent relative humidity), but that commercial kitchens operate at 90–100 °F with 60–70 percent relative humidity. (*Id.*) True commented that in this case, the ASHRAE 72–2005 test works as a ''baseline'' or ''marker'' comparison point between units. (*Id.*)

Continental suggested that the NSF 7–2019 test conditions should be evaluated for the suitability of energy testing. (Continental, No. 6, p. 2) AHRI and Continental commented that refrigerated preparation tables in particular are often subject to high ambient temperatures and additional loads, similar to other conventional reach-in CRE, since they are used by kitchen staff and in close proximity to commercial kitchens. (AHRI, No. 3, p. 6; Continental, No. 6, p. 2) AHRI commented that salad bars and buffet tables have shorter operating windows but are open to ambient conditions that can differ from conventional CRE and commented that the NSF 7–2019 definition for these units state they are intended for ''customer self-service.'' (AHRI, No. 3, p. 6) Continental encouraged DOE to work with ASHRAE, AHRI, and ASTM to develop suitable test procedures for any additional product categories. (Continental, No. 6, p. 2)

NEEA and the CA IOUs commented in support of using ASTM F2143–16 for refrigerated buffet and preparation tables. (NEEA, No. 5, p. 4; CA IOUs, No. 10, p. 3) NEEA commented that many of the factors DOE is seeking information on are addressed in detail within the ASTM F2143–16 standard. (NEEA, No. 5, p. 4) The CA IOUs commented that DOE should leverage the work completed by the ASTM Committee F26 on Food Service equipment and related ASTM F2143–16 to serve as the starting point for the test procedure. (CA IOUs, No. 10, p. 3) NEEA commented that DOE should consider aligning test procedure with EPA ENERGY STAR to reduce manufacturer burden and establish consistency in the industry. (*Id.*)

As previously described, the apparent purpose of the NSF 7–2019 test is to determine the capability of a unit to maintain refrigerated temperature in the conditions specified by the industry testing standard. The ASTM F2143–16 ambient conditions match those in NSF 7–2019. However, DOE has initially determined that these conditions are not necessarily the most representative of typical use. As indicated in comments, buffet tables and preparation tables are typically installed in locations similar to other CRE (*e.g.,* food service areas, supermarkets, commercial kitchens) and would be subject to the same ambient conditions during typical use. DOE acknowledges that while the ambient conditions at the point of installation may vary, DOE has determined that the conditions in ASHRAE 72 (in both the currently referenced 2005 version and the 2018R version proposed for use in this NOPR) are appropriately representative of the average use of CRE. 79 FR 22277, 22283. For consistency with other CRE testing, DOE is proposing that the ambient conditions specified in ASHRAE 72–2018R also apply for testing buffet tables and preparation tables.

For measuring these ambient conditions, ASHRAE 72–2018 and ASTM F2143–16 specify the same measurement locations; however, the locations may require further specificity depending on the configuration of the refrigerated buffet table or preparation table under test. For example, the specified measurement location based on the highest point of the unit under test as provided in ASTM F2143–16 could be based on the height of the refrigerated table surface and pan openings or on the height of any lid or cover over the pans, if included. Additionally, the specified measurement location at the center of the unit as provided in ASTM F2143–16 could be based on the geometric center of the unit determined from the height of the open pan surfaces or on the geometric center of any door openings (for those units with refrigerated compartments below the pan area).

In the June 2021 RFI, DOE requested comment on the appropriate locations for recording ambient conditions when testing buffet tables and preparation tables to ensure repeatable and reproducible testing for a range of equipment configurations. 86 FR 31182, 31186.

Hussmann, AHRI, Arneg, and ITW commented in support of using ASHRAE 72–2018 for ambient temperature measurement locations. (Hussmann, No. 14, p. 8; AHRI, No. 3, p. 6; Arneg, No. 12, p. 1; ITW, No. 2, p. 4) AHRI and Hussmann commented in support of consistency with testing of other CRE categories wherever possible, and AHRI suggested that DOE work with ASHRAE to incorporate measurement locations into ASHRAE 72–2018 or a new method of test. (AHRI, No. 3, p. 6; Hussmann, No. 14, p. 8) ITW provided measurement location options for DOE consideration based on the configuration and geometries of the test equipment. (ITW, No. 2, p. 4)

Continental commented that ambient temperature locations are prescribed in ASTM F2143–16 and ASHRAE 72–2018 and that DOE should work with ASHRAE, AHRI, and ASTM to evaluate the suitability of testing buffet tables and refrigerated preparation tables. (Continental, No. 6, p. 2)

Hoshizaki commented that ASTM F2143–16 provides ambient measurement locations and that no changes are needed to them. (Hoshizaki, No. 13, p. 1)

True commented that ambient measurement locations should follow NSF 7–2019 because buffet tables and preparation tables are short-term holding units, such that the NSF 7–2019 test procedure would best capture the energy use of these units. (True, No. 4, p. 9)

As described, DOE is proposing to incorporate by reference ASTM F2143–16 rather than NSF 7–2019 as the basis of testing buffet tables and preparation tables. The ASTM F2143–16 ambient measurement locations are generally consistent with those in the current DOE test procedure and the provisions

in ASHRAE 72–2018R proposed for adoption in this NOPR, but ASHRAE 72–2018R includes additional specificity regarding ambient measurement locations. To ensure appropriate measurement locations, DOE is proposing to reference ASHAE 72–2018R rather than ASTM F2143–16 for ambient condition measurement locations. To provide additional specifications for thermocouple placement to accommodate different buffet table and preparation table configurations, DOE is proposing to add instruction that the ''highest point'' of the buffet table or preparation table is determined as the highest point of the open-top refrigerated area of the buffet table or preparation table, without including the height of any lids or covers. DOE is also proposing to specify that the geometric center of the buffet table or preparation table is: for buffet tables or preparation tables without refrigerated compartments, the geometric center of the top surface of the open-top refrigerated area; and for buffet tables or preparation tables with refrigerated compartments, the geometric center of the door opening area for the refrigerated compartment. DOE is proposing this specification because the geometric center of the unit is used to measure ambient temperature gradient. For units with refrigerated compartments, this instruction referencing the center of the door opening area would ensure that the air entering the compartment during door openings is within the allowable temperature range.

Regarding electrical supply requirements and measurements, appendix A to ASHRAE 72–2018R provides greater specificity for testing as compared to ASTM F2143–16. To improve test repeatability and reproducibility, DOE is proposing to reference the electric supply and measurement requirements specified in appendix A to ASHRAE 72–2018R for testing buffet tables and preparation tables.

DOE is similarly proposing to adopt through reference certain provisions in ASHRAE 72–2018R rather than ASTM F2143–16 for instrumentation requirements for consistency with other CRE testing and with the proposed test conditions (*e.g.,* wet-bulb temperature as specified in ASHRAE 72–2018R rather than relative humidity as specified in ASTM F2143–16).

DOE requests comment on the proposal for testing buffet tables and preparation tables with test conditions (*i.e.,* test chamber conditions, measurement location, and electric supply conditions) consistent with ASHRAE 72–2018R, with additional detail specific to buffet tables and preparation tables.

Test Setup

Section 9.1 of ASTM F2143–16 specifies installation of the buffet table or preparation table for testing according to the manufacturer's instructions, with 6 inches of rear clearance, at least 12 inches of clearance to any side wall or partition, and at least 3 feet of clearance from the front of the unit. Section 5.2 of ASHRAE 72–2018R specifies that the test unit be installed next to a wall or vertical partition in the direction of (a) the exhaust, (b) the intake, or (c) both the exhaust and the intake at the minimum clearance, ±0.5 inches, as specified in the installation instructions; if the installation instructions do not provide a minimum clearance, the vertical partition or wall shall be located 4 ± 0.5 inches from the sides or rear of the cabinet and extend at least 12 inches beyond each side of the cabinet from the floor to at least 12 inches above the top of the cabinet.

DOE has initially determined that the installation instructions in ASHRAE 72–2018R are more representative of actual use, as they require testing according to the minimum manufacturer-specified clearance in the direction of air exhaust or intake rather than a constant 6 inches. DOE expects that CRE are typically installed with minimum installation clearances due to the space-constrained locations in which they operate (*e.g.,* commercial kitchens or food service areas). DOE is proposing to reference the installation requirements in Section 5.2 of ASHRAE 72–2018R for buffet table and preparation table testing to represent typical use and to ensure consistency with appendix B test requirements.

Sections 5.1 and 5.3 of ASHRAE 72–2018R also provide additional instructions regarding test unit installation and setup that are not addressed in ASTM F2143–16. Specifically, section 5.1 provides instructions regarding test unit installation within the test facility and section 5.3 specifies test requirements for components and accessories. While these provisions were established for conventional CRE, DOE has initially determined that they are also applicable to buffet table and preparation table installation and use due to both categories having similar installation locations and similar accessories available for use. DOE is proposing to also reference these Sections in ASHRAE 72–2018R for buffet table and preparation table testing to ensure consistent testing that is representative of actual use.

DOE requests comment on the proposal for testing buffet tables and preparation tables with test setup instructions consistent with ASHRAE 72–2018R rather than ASTM F2143–16.

Test Load

ASTM F2143–16 specifies that temperature measurements for preparation tables or buffet tables be taken from standardized pans filled with distilled water. ASTM F2143–16 also specifies measuring the temperature in any chilled compartments for refrigerated buffet and preparation tables using three thermocouples in an empty, unloaded compartment. DOE's current test procedure for CRE requires that integrated average temperature measurements be taken from test simulators consisting of a plastic container filled with a sponge saturated with a 2-percent mixture of propylene glycol and distilled water. *See* ASHRAE 72–2005, section 6.2.1. Additionally, the DOE test procedure requires 70 to 90 percent of the compartment net usable volume to be loaded with filler material and test simulators for testing (60 to 80 percent as proposed in this NOPR by referencing Section 5.4.8 of ASHRAE 72–2018R). *See* ASHRAE 72–2005, section 6.2.5. Buffet tables and preparation tables may not typically be loaded to 70 percent of their net usable volume due to their use for service rather than long-term storage, but testing with the refrigerated compartment entirely empty also may not be representative of average use.

In the June 2021 RFI, DOE requested comment on the appropriateness of using only distilled water as the test medium to represent thermo-physical properties of foods that are typically stored in the surface pans of buffet tables and preparation tables. 86 FR 31182, 31187.

AHRI commented that DOE should work with the ASHRAE committee to consider revisions to ASHRAE 72 to incorporate appropriate requirements if they are unique enough to warrant a separate ASHRAE method of test. (AHRI, No. 3, p. 6)

ITW, Hussmann, and Hoshizaki commented in support of DOE using distilled water as the test medium because it is cost effective and easy to replicate. (ITW, No. 2, p. 5; Hussmann, No. 14, p. 9; Hoshizaki, No. 13, p. 2) Hoshizaki commented that they tested preparation tables with the glycol mixture and distilled water and did not see a difference of pan temperature. (Hoshizaki, No. 13, p. 2) ITW

commented that open-top refrigeration equipment is designed to hold foods of all types (liquids, solids, loosely filled combinations of both, *etc.*) with varying thermo-physical properties, but that in general all variations are composed of mostly water. (ITW, No. 2, p. 5) ITW commented that distilled water has the advantages of providing a consistent and readily available medium that closely approximates the properties of most food types under the specified test conditions; allowing for bulk containers to be filled and pre-chilled; and allowing for food pans regardless of shape or dimensions to be ''quickly'' and evenly filled. (ITW, No. 2, p. 5) ITW also stated that pre-marking each pan one half inch below the top rim minimizes the total pan loading time as compared to the ''balance scale'' method outlined in the ASTM F2143–16 standard, sections 10.4.3.5 through 10.4.3.7. (*Id.*)

Arneg and True commented that distilled water should not be used as the test medium. (Arneg, No. 12, p. 1; True, No. 4, p. 9) Arneg commented that although food temperatures are typically above 32 °F, depending on the type of food, the intended product temperature could be below 32 °F. (Arneg, No. 12, p. 1) True commented that the test media in NSF 7–2019 (methocel) should be used to represent foods. (True, No. 4, p. 9, 11) True commented that using distilled water is a problem because the pan temperature cannot be properly measured if testing below 32 °F since the water temperature will only change once completely solidified into ice. (*Id.*) CA IOUs commented that a 2014 study from Pacific Gas and Electric (''PG&E'') showed some units periodically dropping below 32 °F and suggested DOE explore alternatives to distilled water to validate if any alternatives would be warranted when weighing the added test complexity and costs. (CA IOUs, No. 10, p. 3)

Hussmann commented that DOE should allow the use of methocel as an alternative to align with NSF 7–2019. (Hussmann, No. 14, p. 9)

DOE has initially determined that the distilled water pan loading as specified in ASM F2143–16 provides a representative test load for the open-top refrigerated areas of buffet tables and preparation table, while limiting test burden, and is consistent with the filler material specified in both ASHRAE 72–2005 and ASHRAE 72–2018R (*i.e.,* filler material that consists of water, a 50/50 mixture (±2%) of distilled water and propylene glycol, or wood blocks with an overall density not less than 480 kg/m^3 (30 lb/ft^3). As stated in the ITW comment, typical food loads are composed mostly of water, such that water is a representative test medium. Additionally, distilled water does not require any additional preparation by the test laboratory, limiting test burden and ensuring a consistent test medium across different test facilities.

DOE acknowledges that using water would not accommodate testing at conditions at and below 32 °F. However, ASTM F2143–16 specifies pan temperature to be within 33 °F and 41 °F for a valid test. As discussed later in this section, DOE is proposing that the integrated average pan temperature be 38 °F ± 2 °F for buffet table and preparation table testing. At these temperatures, the distilled water would be liquid and would not result in the testing issues associated with freezing. Additionally, DOE observed during investigative testing that individual pans filled with distilled water did not reach temperatures lower than 33 °F when tested with an integrated average pan temperature of 38 °F ± 2 °F.

In addition to proposing the water test load, DOE is proposing that pans for testing be loaded to within one half inch of the top of the pan. For pans that are not configured in a horizontal orientation, DOE is proposing that only the lowest side of the pan be loaded to within one half inch of the top of the pan. ASTM F2143–16 specifies a pan loading procedure based on the weight of water needed to load pans to one half inch of the top of the pan. DOE expects a loading method based on marking pans or measuring distance from the water to the top of the pan would limit test burden as compared to the weight-based method in ASTM F2143–16 and that both the loads and loading methods would be substantively the same.

ASTM F2143–16 specifies the pans for holding water to be standard 4-inch deep ⅙-size metal steam table pans with a weight of 0.70 ± 0.07 lb. ASTM F2143–16 allows for manufacturer-specified pans if the unit is designed specifically for such pans. DOE notes that manufacturers typically specify pan dimensions or provide pans for their units, but some manufacturers do not provide a pan depth or may specify a range of possible pan depths. DOE also notes that pan materials can vary and are not always specified by the manufacturer.

In the June 2021 RFI, DOE requested comment on whether pan dimensions should be standardized if testing buffet tables and preparation tables is required, or whether these units should be tested with pans meeting manufacturer-recommended pan dimensions. 86 FR 31182, 31187. If pans were standardized, DOE requested comment on whether the dimensions described in ASTM F2143–16 are appropriately representative of what is used, or whether another set of dimensions or materials would be more appropriate. *Id.* DOE also requested information on whether the pan material should be defined in greater detail, recognizing that ASTM F2143–16 specifies only that the pans be ''metal.'' *Id.*

True commented that the ⅙ metal steam table pans have a larger surface area (to product or media) than the ½ size metal steam table pans in NSF 7–2019, and suggested the following based on NSF 7–2019: ''standard half-size hotel (4 in [102 mm]) shall be used unless the equipment being evaluated is specifically and permanently designed to hold alternate size pans,'' ''stainless steel pans shall be used unless otherwise specified by the manufacturer.'' (True, No. 4, p. 10)

ITW, AHRI, Hussmann, Hoshizaki, Arneg, and Continental commented that a standardized pan size should not be used due to the variety of pan sizes and configurations across different manufacturers. (ITW, No. 2, p. 5; AHRI, No. 3, p. 7; Hussmann, No. 14, p. 9; Hoshizaki, No. 13, p. 2; Arneg, No. 12, p. 1; Continental, No. 6, p. 2) Hoshizaki commented that manufacturers should specify what pan size they require for testing their unit as part of their test setup instructions. (Hoshizaki, No. 13, p. 2) AHRI and Hussmann commented that the pan(s) size should only be required to fill the pan opening in the unit and of a material offered by the manufacturer. (AHRI, No. 3. p. 7; Hussmann, No. 14, p. 9) ITW commented that a standardized food pan/pan configuration should only be used if the manufacturer does not supply food pans with their equipment or provide a list of acceptable pans with specifications to be used with their equipment. (ITW, No. 2, p. 5)

Based on a review of buffet tables and preparation tables available on the market, manufacturers typically allow for a range of pan configurations in the open top refrigerated area. These configurations can nearly always accommodate the ⅙ size steam table pans referenced in ASTM F2143–16. To ensure consistent testing for units that offer multiple pan configurations, DOE is proposing to reference the pan instructions in ASTM F2143–16. If a buffet table or preparation table cannot be loaded with the specified standard pans, DOE is proposing to test with the pans that are consistent with the manufacturer installation instructions and with the dimensions as close to the standard pans as is available, consistent

with the ASTM F2143–16 loading instructions.

In the June 2021 RFI, DOE requested comment on the feasibility of requiring temperature measurements in closed refrigerated compartments of buffet tables and preparation tables using test packages as specified in ASHRAE 72 (specified in the 2005, 2018, and 2018R versions), and whether the compartments should be loaded with any filler packages (and to what percent of the net usable volume) for testing. 86 FR 31182, 31187. DOE requested comment on alternatives that should be used if the test packages are not appropriate for measuring compartment temperatures (*e.g.,* thermocouples located in pans filled with distilled water, thermocouples as specified in ASTM F2143–16, or weighted thermocouples [19]). *Id.*

As discussed in section III.C.1 of this document, under the current test procedure a thermal separation would be required between the buffet table or preparation table and a refrigerated compartment for the refrigerated compartment to be subject to the testing requirements, which include test simulators and loading requirements. Buffet tables and preparation tables may include refrigerated compartments that are not thermally separated from the open-top refrigerated area, and DOE considered whether different loads (or no load) would be appropriate for testing such compartments.

AHRI commented that DOE should work with ASHRAE SSPC 72 to incorporate appropriate requirements for these units or determine if they are unique enough to warrant a separate ASHRAE method of test. (AHRI, No. 3, p. 6)

Hussmann and Hoshizaki commented that the method to measure compartment temperature should follow the locations specified in ASTM F2143–16. (Hussmann, No. 14, p. 9; Hoshizaki, No. 13, p. 2) Hussmann commented that the thermocouples could be as stated in ASTM F2143–16 or brass slugs, as specified in NSF 7–2019. (Hussmann, No. 14, p. 9) Hoshizaki commented that this measurement of the refrigerated cabinet is the same as the NSF 7–2019 test in which three slugs are positioned at different parts of the cabinet. (Hoshizaki, No. 13, p. 2) Hoshizaki recommended testing with only slugs, as currently shown in ASTM F2143–16. (Hoshizaki, No. 13, p. 2)

True and Continental commented in support of using weighted thermocouples, as prescribed in NSF 7–2019, for air temperature measurements in closed refrigerated compartments. (True, No. 4, p. 10; Continental, No. 6, p. 2) Continental commented that requiring filler packages in the storage compartment would add significant unnecessary testing burden on manufacturers. (Continental, No. 6, p. 2)

True and Hoshizaki commented that the addition of filler packages would add a thermal mass that will decrease the cooling requirements by helping to stabilize the temperature once stabilization temperature is reached for the closed refrigeration compartment, such that NSF 7–2019 would offer the worst case for energy use and would decrease test and stabilization time. (True, No. 4, p. 10; Hoshizaki, No. 13, p. 2)

DOE is proposing that any refrigerated compartment of a buffet table or preparation table (*i.e.,* any refrigerated compartment that is not thermally separated from the open-top refrigerated area) be tested with no load. DOE is proposing to reference the ASTM F2143–16 requirements, which specifies placing three thermocouples in specific locations within the empty refrigerated compartment. DOE has tentatively determined that this approach would limit test burden by not requiring additional test simulator preparation or loading of filler materials. Additionally, DOE expects that the refrigerated compartments of buffet tables and preparation tables are typically used for short-term storage of items used during food service and food preparation (*i.e.,* with additional pans of prepared food or ingredients for food preparation) rather than long-term storage, and that therefore an unloaded cabinet would be more representative of typical usage. This is also consistent with the DOE test procedures for consumer refrigeration products, which measure internal compartment temperatures with no load. See 10 CFR part 430, subpart b, appendix A and appendix B.

ASTM F2143–16 does not specify whether the internal compartment thermocouples are weighted or unweighted. For consistency with the NSF 7–2019 approach, DOE is proposing that the thermocouples be weighted—*i.e.,* in thermal contact with the center of a 1.6-oz (45-g) cylindrical brass slug with a diameter and height of 0.75 in. The brass slugs shall be placed at least 0.5 in from any heat-conducting surface. While ASHRAE 72–2018R requires internal compartment temperatures to be measured using test simulators, ambient temperature measurements are similarly made by thermocouples in contact with cylindrical brass slugs with the same specifications.

DOE requests comment on the proposed test loads and temperature measurement locations for buffet tables and preparation tables—*i.e.,* distilled water in pans for the open-top refrigerated area and no load in any refrigerated compartment—consistent with the approach in ASTM F2143–16.

Test Conduct—Defrosts

ASTM F2143–16 does not provide specific instructions for addressing defrost cycles when testing buffet tables and preparation tables, other than indicating in the test report whether a defrost cycle occurred. Section 7.3 of ASHRAE 72–2018R directs that the test period begins with a defrost cycle. This section also requires that for refrigerators with manual defrost or off-cycle defrost, the test is started at the beginning of a refrigeration system off cycle (if the off-cycle defrost is not identifiable); or, if the refrigeration system never cycles off, the test is started at any point during refrigeration system operation.

Defrost cycles can increase the energy consumption of refrigeration equipment as compared to stable operation; however, DOE has observed that most buffet tables and preparation tables often incorporate off-cycle defrosts, which melt frost accumulation by running the evaporator fan during a compressor off-cycle. This method of defrost does not actively introduce heat to melt the accumulated frost and may occur during the compressor's normal cycling operation. With this defrost approach, there may not be an identifiable defrost occurrence in the measured test data.

In the June 2021 RFI, DOE requested comment on whether a possible test procedure should consider defrost cycles for buffet tables and preparation tables, and if so, how. 86 FR 31182, 31188.

Hussmann, AHRI, Hoshizaki, and True commented that the test procedure should not include defrost cycles. (Hussmann, No. 14, p. 12; AHRI, No. 3, p. 9; Hoshizaki, No. 13, p. 3; True, No. 4, p. 13) AHRI commented these units have shorter operating windows than typical CRE, with manual defrost often conducted overnight outside the operating window. (AHRI, No. 3, p.9) Hussmann commented that if the defrost interval is less than 4 hours, then it could be considered. (Hussmann, No. 14, p. 12) Hoshizaki commented that a truncated test should not address defrost cycles if the goal is to test for a given time because designing a test around defrost cycles, as done in the

[19] ASHRAE 72–2018R describes a weighted thermocouple as a thermocouple in thermal contact with the center of a 45 g (1.6 oz) cylindrical brass slug with a diameter and height of 19 mm (0.75 in).

ASHRAE 72–2018 24-hour test, would be time consuming and would provide negligible insight to actual energy use. (Hoshizaki, No. 13, p. 3)

ITW commented that refrigerated salad bars, buffet tables, and preparation tables that include an integrated storage compartment typically operate on a 24-hour daily cycle and should have their defrost cycles considered, but units without this storage compartment do not need to include the defrost cycle in the energy evaluation since they typically operate on shorter schedules. (ITW, No. 2, p. 7)

ITW commented that for units with a refrigerated storage compartment, the start of the defrost cycle should initiate the testing cycle in order to have a consistent methodology and to provide information on the characteristics of different defrost types. (ITW, No. 2, p. 7)

DOE has initially determined that to the extent that buffet tables or preparation tables incorporate automatic electric or hot gas defrosts (*i.e.,* heating the evaporator to melt frost accumulation), or any automatic extended off-cycle defrost (*i.e.,* off-cycle defrost with a duration longer than a compressor off-cycle), the energy consumption of these defrosts should be captured in the test period to measure energy use representative of typical use. DOE observed during investigative testing that automatic extended off-cycle defrost is used in both buffet tables and preparation tables. To incorporate this energy use and ensure consistent testing of buffet tables and preparation tables, DOE is proposing to require that test periods for buffet tables and preparation tables account for any defrosts consistent with the requirements in ASHRAE 72–2018R. This would require capturing a defrost at the start of the test period or starting the test period at the beginning of a refrigeration off-cycle if there is no identifiable defrost (or at any point during refrigeration system operation if the refrigeration system never cycles off).

DOE requests comment on the proposal to account for defrosts when testing buffet tables and preparation tables, consistent with the approach in ASHRAE 72–2018R.

Test Conduct—Moving Pans

Section 10.5.6 of ASTM F2143–16 specifies that if it is possible to control cooling to the display area independently of the refrigerated cabinet, the cooling to the display area is turned off and all pans are to be moved from the display area to the refrigerated cabinet underneath after the active period. The ability to control cooling in both the display area and the refrigerated cabinet independently of each other suggests that this language applies to units with thermally-separated compartments and pan areas.

In the June 2021 RFI, DOE requested comment on whether moving pans from the display area to the refrigerated compartment as specified in Section 10.5.6 of ASTM F2143–16 is appropriate for testing buffet tables and preparation tables. 86 FR 31182, 31187. DOE further requested feedback on whether storing pans in a refrigerated compartment is typical only for those units with certain configurations—*e.g.,* thermal separation between the compartment and refrigerated pan area or closable covers for the pan area. *Id.*

AHRI and Hussmann commented that the open pan area testing in NSF 7–2019 should be considered for possible incorporation into industry test standards, and that ASHRAE 72–2018 has provisions for storage compartment testing methods. (AHRI, No. 3, p. 7; Hussmann, No. 14, p. 10)

Hoshizaki and True commented that requiring the movement of pans to refrigerated sections during the test should not be considered as part of an energy test standard. (Hoshizaki, No. 13, p. 2; True, No. 4, p. 11) Hoshizaki commented that the movement of pans is only a suggestion in ASTM F2143–16 and suggested that manufacturers specify that as part of their test setup instructions. (Hoshizaki, No. 13, p. 2)

Continental, AHRI, and Hussmann commented that equipment with the ability to turn off the open-top refrigeration system should have pans moved to the refrigerated storage compartment if it conforms with the manufacturer's instructions for unloading the display area at night. (Continental, No. 6, p. 2; AHRI, No. 3, p. 7; Hussmann, No. 14, p. 10)

ITW commented that equipment with the ability to turn off the open-top refrigeration system should not move the food pans to the storage compartment. (ITW, No. 2, p. 5–6) ITW commented that food pans should not be removed during the evaluation period because it would introduce variations or inconsistencies between test laboratories and manufacturers because the time to complete the activity would be inconsistent. (*Id.*)

ITW commented that removing food pans from the open-top ''rail'' after 8 hours changes the thermodynamic load placed on the refrigeration system, and movement to the integral storage compartment is dependent on the unit's ability to switch off the cooling for the ''rail.'' (ITW, No. 2, p. 5–6) ITW commented that DOE has consistently indicated that all manually operated on/off switches that increase energy consumption should be in the on position throughout the evaluation period, such that switching off the ''rail'' refrigeration system after 8 hours would be inconsistent with DOE's previous position. (*Id.*)

AHRI and Hussmann commented that the open pan area testing in NSF 7–2019 should be considered for possible incorporation into industry test standards, and that ASHRAE 72–2018 has provisions for storage compartment testing methods. (AHRI, No. 3, p. 7; Hussmann, No. 14, p. 10)

DOE currently provides test procedures for any refrigerated compartments that are combined with buffet tables and preparation tables and that are thermally separate from the open-top refrigerated area. DOE is not proposing to amend the test requirements for such thermally separate refrigerated compartments.

As discussed earlier in this section, DOE is proposing to reference ASTM F2143–16 rather than NSF 7–2019 as the basis for buffet table and preparation table testing. Section 10.5.6 of ASTM F2143–16 specifies moving pans from the display area to the refrigerated cabinet underneath after the active period if it is possible to control cooling to the display area independently of the refrigerated cabinet. As stated, the separate cooling control suggests thermal separation between the open-top area and the refrigerated cabinet. Because DOE is not proposing changes to the current test requirements for any thermally separated refrigerated cabinets, DOE is proposing that all buffet tables and preparation tables be tested with the pans in the display area for the entire test, including the ''standby period'' specified in Section 10.5.6 of ASTM F2143–16.

DOE has initially determined that this proposed approach would limit test burden and variability by avoiding moving pans during the test period, which could introduce varying heat loads depending on how the movement is conducted. Additionally, DOE expects that the proposed test procedure is representative of typical buffet table and preparation table use. As previously discussed, DOE expects that buffet tables and preparation tables are used for short-term storage during food service and food preparation. Therefore, it is unlikely that these units would be used for storage in the refrigerated compartment without any pans loaded in the open-top pan area.

DOE requests comment on its proposal to require loading pans in the open-top refrigerated area and not

moving them to a refrigerated compartment, if applicable, during testing.

Test Conduct—Operating Periods and Door/Lid Openings

As described, buffet tables and preparation tables temporarily store and display perishable items during food preparation or service. Because buffet tables and preparation tables are used only during food preparation or service, these equipment types may not be used for the same 24-hour duration used to characterize performance for other categories of CRE. Sections 10.5.5 and 10.5.6 of ASTM F2143–16 specify a 24-hour test, with an active period of 8 hours and a standby period of 16 hours. The active period specified in section 10.5.5 contains instructions for a cover, if equipped (open for 2 hours, then closed for 4 hours, then open for 2 hours), and a door opening sequence for any refrigerated compartments (every 30 minutes, each cabinet door or drawer, or both, shall be fully opened sequentially, one at a time, for 6 consecutive seconds; for units with pass-thru doors, only the doors on one side of the unit are opened).

In the June 2021 RFI, DOE requested comment on the typical daily usage of buffet tables and preparation tables. 86 FR 31182, 31187. Additionally, DOE requested feedback on whether these CRE are used for long-term storage of food or only short-term storage during food preparation or service periods. *Id.* DOE also requested comment on whether the daily use of this equipment varies depending on configuration or other technical characteristics. *Id.*

AHRI, Hussmann, Arneg, and True commented that the typical use is only during service operating hours (approximately 8–12 hours), such that the typical use is short-term during food preparation or service periods rather than long-term food storage. (AHRI No. 3, p. 8; Hussmann, No. 14, p. 10–11; Arneg, No. 12, p. 1; True, No. 4, p. 11) Hoshizaki commented that preparation table units are typically used for a period of 11 hours for restaurants with active food prep areas. (Hoshizaki, No. 13, p. 2) Arneg and True commented that it is common to store foods in salad bars and buffet tables for short periods of time during ''rush periods'' (*i.e.,* breakfast, lunch, dinner, bar closing time). (Arneg, No. 12, p. 1; True, No. 4, p. 11) Arneg commented that if food safety time-temperature relations are used, depending on how long the food is displayed, the cabinets may not need to be refrigerated. (Arneg, No. 12, p. 1) True commented that most food service operators use walk-in coolers for overnight storage, not the storage section of these CRE models. (True, No. 4, p. 11) True commented the NSF 7–2019 test procedure provides the worst case for energy use during a four-hour period with the covers open. (True, No. 4, p. 11) True commented that ASTM F2143–16 is not appropriate for food safety nor performance testing and suggests the use of NSF 7–2019, which covers the performance requirements for these types of units and encompasses food safety. (True, No. 4, p. 13) True suggested multiplying the four-hour NSF 7–2019 test for energy consumption by six to get a 24-hour energy consumption ''baseline'' number that could be used as a comparison. (True, No, 4, p. 7)

Continental commented that refrigerated preparation tables are designed and utilized for continued storage of products whenever the facility is operating, which can be 24 hours a day. (Continental, No. 6, p. 2)

ITW, AHRI, Hussmann, and Hoshizaki commented that there is no typical daily use of this equipment and that it will vary based on the configuration of the equipment and design characteristics (*e.g.,* if the equipment is provided with a storage compartment), and that usage applications can vary from small sandwich shops to high volume 24-hour fast food chains. (ITW, No. 2, p. 6; AHRI, No. 3, p. 8; Hussmann, No. 14, p. 10–11; Hoshizaki, No. 13, p. 2)

ITW provided common operational characteristics among all applications depending on equipment configurations, including 24-hour unit operation and various pan/lid operating durations. (ITW, No. 2, p. 6)

Based on comments from interested parties, DOE has tentatively determined that buffet tables and preparation tables are typically used for food service and food preparation rather than longer term food storage. As described earlier in this section, DOE is proposing to test this equipment with pans loaded into the open-top display areas for the duration of the test, which DOE has tentatively determined represents typical use during food service and food preparation.

DOE recognizes that the duration of use per day varies based on application and installation location for this equipment. Based on comments from interested parties, buffet tables and preparation tables can be used for up to 24 hours per day. DOE has initially determined that a 24-hour test period as specified in ASTM F2143–16 incorporates the likely aspects of buffet table and preparation table operation—*i.e.,* an active door-opening period and a period of stable operation. While the actual durations of use may vary based on end use application, the measured energy use in kWh/day is representative of the energy use of a unit operated in 24 hours and allows for consistent energy use comparisons among models. DOE is proposing to require a 24-hour test period for buffet tables and preparation tables as specified in ASTM F2143–16. The proposed 24-hour test period is consistent with the industry test procedure, the test procedure for other CRE, limits test burden and variability by allowing for stable operation over a longer period, and incorporates the door openings and stable operation expected during typical usage.

DOE requests comment on the proposed 24-hour test period, which is consistent with the approach in ASTM F2143–16.

In the June 2021 RFI, DOE requested comment on the applicability of the ASTM F2143–16 door and cover opening specifications. 86 FR 31182, 31187. DOE requested comment on whether the door-opening requirements specified in ASHRAE 72–2018 are appropriate for buffet tables and preparation tables. *Id.*

The CA IOUs commented that the door opening methodology in ASTM F2143–16 was developed specifically for units that have an open-top refrigerated area connected to a refrigerated bottom compartment, and that they understand this to be the most common configuration for these products. (CA IOUs, No. 8, p. 3) The CA IOUs commented that this methodology implements product loading and door opening that mirrors field observations from a 2014 PG&E study. (*Id.*) AHRI and Hussmann commented that further evaluation is needed for door opening provisions. (ASTM F2143–16 methods and target IATs). (AHRI, No. 3, p. 8; Hussmann, No. 14, p. 11)

Hoshizaki commented in support of a longer cover opening time, stating that 2 hours up, 4 hours down, and 2 hours up is adequate but unrealistic. (Hoshizaki, No. 13, p. 2) Hoshizaki suggested running a modified NSF 7–2019 test in which the lids are up for 4 hours and then closed for 4 hours, with the 8 hour energy consumption test scaled to get a daily usage value. (*Id.*)

ITW commented that due to variability in end use, the cover opening period should reflect usage time and pattern claimed by the manufacturer. (ITW, No. 2, p. 6)

True and ITW commented that there is no typical use case for door openings, and True stated that no door openings should occur during testing. (True, No.

4, p. 11–12; ITW, No. 2, p. 6) ITW commented that if DOE were to adopt the door opening period, frequency, and length specified in ASHRAE 72–2018 (for the storage compartment), the simulated product loading requirements specified in the standard should also be adopted. (ITW, No. 2, p. 6)

As discussed, ASTM F2143–16 includes an eight hour ''active period'' which includes instructions for any open-top display area covers (two hours open, four hours closed, and two hours open) and any refrigerated compartment doors and/or drawers (fully opened sequentially for six seconds every 30 minutes). DOE recognizes that the actual use of buffet tables and preparation tables can vary depending on application. The cover and door opening requirements in ASTM F2143–16 were developed by an industry committee with the intent of evaluating energy performance. While the door-openings specified in ASTM F2143–16 are less frequent than those required in ASHRAE 72–2018R, DOE expects that any refrigerated compartments in buffet tables or preparation tables are accessed less frequently than in other CRE because maintaining the refrigerated temperature of food items held in the open-top pan area is the primary function of buffet tables or preparation tables during operation. Additionally, the eight-hour ''active period'' during which door openings occur is consistent with the eight-hour period of door openings required in ASHRAE 72–2018R. Based on the foregoing, DOE has tentatively determined that the cover and door opening provisions of ASTM F2143–16 are appropriately representative.

Accordingly, DOE is proposing to incorporate the ''active period'' requirements for cover and door and/or drawer openings as specified in Section 10.5.5 of ASTM F2143–16.

DOE requests comment on the proposed door and cover opening procedures, which are consistent with the approach specified in ASTM F2143–16. DOE requests data and information on representative usage of buffet tables and preparation tables, including door and cover openings.

Test Conduct—Stabilization

Sections 10.3 and 10.4 of ASTM F2143–16 require that the unit be operated with empty pans and open covers for at least 24 hours, that the unit operate with empty pans for at least 2 hours, that water be pre-cooled before being loaded into the pans, and, once the water has been loaded into the pans, that the thermostat be calibrated until the pan temperatures are never outside of 33 °F to 41 °F for any 15-minute period over a 4-hour measurement period. In contrast, the current CRE test procedure, by reference to ASHRAE 72–2005, generally provides that the unit be loaded with test simulators and filler packages prior to pre-cooling, operated to establish steady-state conditions over consecutive 24-hour periods or refrigeration cycles, and, once steady-state conditions have been achieved, continue to operate for at least 12 hours without any adjustment to the controls.

In the June 2021 RFI, DOE requested comment on the appropriate stabilization method to use when testing buffet tables and preparation tables. 86 FR 31182, 31187.

AHRI and Hussmann commented that further evaluation is needed regarding stabilization provisions. (AHRI, No. 3, p. 11; Hussmann, No. 14, p. 8)

AHRI, Hussmann, Continental, and True commented that covers should be closed during the stabilization period, as prescribed in NSF 7–2019. (AHRI, No. 3, p. 11; Hussmann, No. 14, p. 8; Continental, No. 6, p. 2; True, No. 4, p. 12) Continental commented that ASTM F2143–16 Section 10.3.3 prescribes placing pans in the open top area and leaving covers open for a 24-hour stabilization period, which Continental stated is not representative of typical use. (Continental, No. 6, p. 2) True commented that deviation from the NSF 7–2019 standard for loading and stabilization requirements of product and filler pans would cause additional test burden since handling of pans and probes can lead to errors and the need to repeat tests. (True, No. 4, p. 11–12)

Hoshizaki commented that the 24-hour stabilization period specified in ASTM F2143–16 is appropriate for their units, as they observe temperatures stabilizing in that period, and the 24-hour period helps with scheduling. (Hoshizaki, No. 13, p. 2) Hoshizaki commented that the ASTM F2143–16 requirement for the unit to operate with empty pans for at least 2 hours poses an access challenge, since most manufacturers prefer to use a door opener mechanism, which would prevent clear access to the pans and front of the machine. (*Id.*)

As discussed, DOE is proposing generally to reference ASTM F2143–16 rather than NSF 7–2019 for buffet table and preparation table testing. However, the stabilization and thermostat calibration requirements in Sections 10.3 and 10.4 of ASTM F2143–16 may require an iterative process of thermostat adjustment and recalibration to achieve stability and then to ensure that appropriate conditions are maintained during the test period. The recent update to ASHRAE 72–2018R specifies provisions for other CRE that require stability to be confirmed over two test periods with identical operation in order to avoid the need for an iterative process. DOE is proposing to reference sections 7.1 through 7.5 (excluding sections 7.2.1, 7.2.2, 7.3.1, 7.3.2, 7.3.3, and 7.3.4, as those sections would not be applicable to self-contained buffet tables or preparation tables because those sections are intended for CRE with remote condensing units, CRE without doors, CRE with different door opening sequences, and CRE with lighting occupancy sensors and controls) of ASHRAE 72–2018R for determining stabilization and specifying the testing sequence for testing buffet tables and preparation tables. The preparation period under Section 7.2 of ASHRAE 72–2018R would include loading the pans with water and adjusting the necessary controls to maintain the specified temperatures. For the purposes of determining stability as specified in Section 7.5 of ASHRAE 72–2018R, the average temperatures of measured pans would be used to compare Test A and Test B rather than the temperatures of test simulators. DOE has tentatively determined that this approach would ensure stability over the test period and limit test burden by avoiding an iterative approach to determine stability and test conditions. This approach would also maintain consistency with the procedures used for testing other CRE.

DOE requests comment on the proposed stabilization approach for buffet table and preparation table testing, which would reference the approach specified in ASHRAE 72–2018R.

Test Conduct—Target Temperatures

ASTM F2143–16 instructs that if a buffet table or preparation table is equipped with a refrigerated compartment, the compartment air temperature is to be between 33 °F and 41 °F. Likewise, the water temperature in each of the pans placed in the display area also is to be between 33 °F and 41 °F. The DOE test procedure for other CRE requires IATs of 38 °F ± 2.0 °F for medium temperature applications.

Through preliminary research, DOE has found that buffet and preparation tables use a variety of refrigeration methods for cooling the pans in the display area and the refrigerated compartment. In some configurations, units might not be able to maintain all pans and the refrigerated compartment within the specified temperature range. For example, units with a single

refrigeration system and thermostat control for temperatures in either the refrigerated compartment or in the pan area would control for temperature in either the pan area or refrigerated compartment, and both may not be within the target range. As a result, certain equipment may maintain only the refrigerated compartment or the pan area, but not both, within a specified temperature range during operation.

In the June 2021 RFI, DOE requested comment on appropriate temperature ranges for all pans and compartments during testing, and whether the test temperature should be specified as an allowable range or as a target IAT with a specified tolerance. 86 FR 31182, 31188. Additionally, if a target IAT is appropriate, the pans and any refrigerated compartment IAT could be measured separately from each other, or all temperature measurement locations within the refrigerated compartment and pans could be averaged together to determine a single IAT. If separate IATs of the pans and the compartment should be used, DOE requested comment on which IAT should be used to determine the appropriate thermostat control (if the unit has only one overall temperature control). *Id.*

AHRI commented that further evaluation is needed to incorporate the appropriate IAT provisions into industry test standards. (AHRI, No. 3, p. 8) AHRI also commented that preparation or service of cold temperature foods (*e.g.,* sushi or ice cream) would need to be considered. (AHRI, No. 3, p. 5)

True, Hoshizaki, and Continental commented in support of the NSF 7–2019 standard. (True, No. 4, p. 12; Hoshizaki, No. 13, p. 2; Continental, No. 6, p. 3) True commented that during the NSF 7–2019 test, the product is moved from a separate holding cabinet (*e.g.,* a reach in refrigerator or walk in cooler). (True, No. 4, p. 12) Hoshizaki and Continental commented in support of the moving box car average temperature (*i.e.,* a data treatment method that replaces a group of consecutive data points with its average) for open-top pans, along with the maximum and minimum temperature range for thermocouples, stating that this approach would provide a good indicator of maintaining temperatures over an extended period of time. (Hoshizaki, No. 13, p. 2; Continental, No. 6, p. 3)

Hussmann and Continental commented in support of an IAT of below 41 °F with a specified tolerance for the storage compartment. (Hussmann, No. 14, p. 11; Continental, No. 6, p. 3)

ITW commented in support of a target temperature range of 35 °F in the open-top for consistency and repeatability. (ITW, No. 2, p. 7) ITW commented that this would represent the best approach, assuming that distilled water pre-cooled to 35 °F in bulk is used in filling empty food pans already placed in the open-top pans at the initiation of the evaluation, that the environmental conditions for the evaluation match those found in the ASHRAE 72–2018 standard, and that the temperatures of the simulated product held within the storage compartment are recorded but not specified. (*Id.*)

As discussed, ASTM F2143–16 and NSF 7–2019 both specify a pan and compartment temperature range of 33 °F to 41 °F for testing. The current DOE test procedure for CRE requires testing to an IAT within 2 °F of the specified target temperature. DOE expects that this smaller allowable temperature range would limit test variability as compared to the 8 °F allowable range specified in ASTM F2143–16 and NSF 7–2019.

The ASTM F2143–16 and NSF 7–2019 temperature ranges apply to all measured pan and compartment temperatures, whereas DOE's current temperature specifications apply to the IAT—*i.e.,* the average of all test simulator temperature measurements over the test period. DOE has tentatively determined that the temperature specification based on an average temperature rather than individual temperature measurements would limit test burden by limiting the need for re-tests in the case of individual temperature measurements being outside of the required range. Additionally, DOE has initially determined that the average temperature approach would allow for testing buffet tables and preparation tables with configurations not capable of maintaining all temperature measurements within the required range. For example, if the refrigerated compartment provides cooling to the open-top pan area, the refrigerated compartment temperature measurements may be colder than the pan temperatures and not necessarily within a specified range. Additionally, certain temperature measurement locations may be warmer or colder than others depending on proximity to the evaporator or refrigerated areas, resulting in ''hot'' or ''cold'' spots. Testing to a specified average temperature would consider the overall average measured temperature and would allow for testing such configurations.

Based on these initial determinations, DOE is proposing to require testing buffet tables and preparation tables to a specified average temperature rather than an allowable range. DOE is proposing that the average temperature be calculated over the test period separately for the pan temperature measurements (*i.e.,* the average of temperatures measured throughout the test period at each pan measurement location specified in ASTM F2143–16) and the temperature measurements in any refrigerated compartment (*i.e.,* the average of temperatures measured throughout the test period at each of the three compartment measurement locations specified in ASTM F2143–16). DOE is proposing that the average temperature of all refrigerated pans be 38 °F ± 2 °F. This temperature is consistent with the current DOE test procedure for medium temperature CRE and is within the allowable range specified in ASTM F2143–16 and NSF 7–2019. Testing to a lower average temperature, such as 35 °F as recommended in the ITW comment, could increase the likelihood of refrigerated pans freezing during the test period. DOE is similarly proposing that the average temperature of any refrigerated compartment also be 38 °F ± 2 °F. If the buffet table or preparation table configuration does not allow independent control of the refrigerated compartment and both the pan average temperature and refrigerated compartment average temperature cannot be maintained within 38 °F ± 2 °F over the test period, DOE is proposing that the refrigerated compartment be tested to the average temperature necessary to maintain the pan average temperature within the specified range. Similar to the existing LAPT provision in section 2.2 of appendix B, DOE also proposes that if a unit is not capable of maintaining average pan temperatures within the specified range, the unit would be tested at the LAPT.

DOE requests comment on the proposed approach for testing buffet tables and preparation tables based on separate pan and compartment average temperatures. DOE also requests feedback on the proposed target temperature of 38 °F ± 2 °F for each average temperature.

Test Conduct—Capacity Metrics

ASTM F2143–16 specifies the reporting of ''production capacity,'' which is defined as the total volume of the pans when each pan is filled within one-half inch of the rim. Energy consumption of refrigerated buffet and preparation tables likely varies with pan volume as well as the volume of any closed refrigerated compartments. Therefore, both values are of interest

when considering metrics that define energy performance. Pan surface area could be another possible metric for evaluating energy performance, similar to TDA for horizontal open equipment classes. Reliance on pan surface area may eliminate the variability with different test pan dimensions.

In the June 2021 RFI, DOE requested comment on the potential methodologies for determining pan volume, pan surface area, and pan TDA, as well as refrigerated compartment volume for buffet tables and preparation tables in a potential test procedure for this equipment. 86 FR 31182, 31188. DOE additionally requested comment on which parameter(s) (*e.g.,* total pan volume, pan surface area, TDA, or a combined metric), may best represent the useful ''capacity'' of this equipment. *Id.*

AHRI and Hussmann commented that because these units are highly customizable, the volume, surface area, and TDA should be used as specified by the manufacturer. (AHRI, No. 3, p. 9; Hussmann, No. 14, p. 12)

ITW commented that DOE has already specified measuring storage compartment volume in accordance with AHAM HRF–1–2008 for units for which the open-top refrigeration system can be turned off, and that this should be applied to all units regardless of the on/off feature or the existence of a thermally separating barrier. (ITW, No. 2, p. 7) Hoshizaki commented that computer-aided design (''CAD'') is a good way to calculate compartment volume. (Hoshizaki, No. 13, p. 2)

ITW commented that the pan surface area or TDA provides a more accurate representation of the heat load placed on open-top refrigeration units than total food pan volume because the environmental energy introduced into the system crosses the horizontal plane at the pan surface, not along the vertical sides or bottom representing the pan volume. (ITW, No. 2, p. 7) Hoshizaki commented that pans come in standard sizes with designated volumes, such that it would make for an easy calculation of total pan volume by selecting the number and size of pans. (Hoshizaki, No. 13, p. 2)

DOE has tentatively determined that pan storage volume, pan display area, and refrigerated volume may all contribute to the capacity and energy consumption of a buffet table or preparation table; therefore, DOE is proposing that the test procedure include measures of these three metrics. DOE is proposing to define and measure ''pan volume'' consistent with the production capacity specified in ASTM F2143–16. DOE is proposing to refer to pan volume rather than production capacity to avoid confusion with the other relevant capacity metrics.

DOE is proposing that the refrigerated volume of buffet table and preparation table refrigerated compartments be tested in accordance with AHRI 1200–202X, consistent with the method proposed for use with other CRE. To avoid double counting of refrigerated pan volumes, DOE is proposing that the refrigerated compartment volume would not include any volume occupied by the pans loaded in the open-top display area for testing. DOE discusses volume measurements based on CAD drawings in section III.H of this NOPR.

DOE is proposing that pan display area be defined and measured as the surface area of the test pan when filled to within one half inch of the rim. This surface area measurement would ensure that the pan display area would be consistent with the pan storage volume (*i.e.,* both measurements would be based on the pans as filled for testing). Additionally, the measurement based on the surface area of the water as loaded for testing would ensure that the surface area measurement accounts for the actual food storage area and excludes any areas not providing refrigerated storage for food service or food preparation.

DOE requests comment on the proposed capacity metrics of pan storage volume, compartment volume, and pan display area. DOE requests feedback on the proposed methods for measuring each and the extent to which these metrics are relevant capacity metrics for buffet tables and preparation tables.

2. Pull-Down Temperature Applications

As defined, CRE is equipment that is designed for holding temperature applications [20] or pull-down temperature applications. 10 CFR 431.62 (*see also* 42 U.S.C. 6311(9)(A)(vi)). ''Pull-down temperature application'' is a commercial refrigerator with doors that, when fully loaded with 12-ounce beverage cans at 90 °F, can cool those beverages to an average stable temperature of 38 °F in 12 hours or less. 10 CFR 431.62 (42 U.S.C. 6311(9)(D)). CRE within this definition are typically known as beverage merchandisers or beverage coolers because of their use in displaying individually packaged beverages for sale, and their ability to pull-down temperatures of such beverages. Pull-down temperature applications with transparent doors and a self-contained condensing unit are the only pull-down temperature applications currently subject to DOE's energy conservation standards specified at 10 CFR 431.66(e).

DOE's current CRE test procedure does not include specific provisions related to the performance criteria in the pull-down temperature application definition. For example, the test procedure does not provide instructions for the starting conditions of the equipment (*e.g.,* whether the equipment begins the test in a pre-cooled state or at ambient temperature conditions), loading of the cans (*e.g.,* whether the equipment must be loaded to full within a certain amount of time), or a method to measure the temperature of the cans to confirm cooling to 38 °F. The current CRE test procedure specifies that commercial refrigerators designed for pull-down applications be tested at steady state (see 10 CFR 431.64(b), and appendix B section 2.1), consistent with testing other covered CRE categories.

In the June 2021 RFI, DOE sought information on whether CRE that provides pull-down temperature applications is sufficiently differentiated from other types of CRE. 86 FR 31182, 31188. If not, DOE sought comment on how manufacturers currently determine whether a model meets the pull-down temperature application criteria. *Id.* DOE also requested comment on appropriate starting conditions, loading methods, and other necessary specifications for a potential test method to verify the pull-down performance of a commercial refrigerator. *Id.* Additionally, DOE requested comment and data on the energy consumption associated with pull-down operation and steady-state operation for CRE designed for pull-down temperature applications, and on whether a modified test method would be appropriate to represent the energy consumption of such equipment. *Id.*

AHRI commented that AHRI members and working group participants discussed pull down applications during AHRI 1200–202X revisions. (AHRI, No. 3, p. 9–10) AHRI commented that requirements for pull down temperatures vary greatly based on product, end use, and stocking, and that the industry does not have a test method for these systems. (*Id.*) AHRI commented that based on the varied conditions, customized nature, and small market segment, the working group determined not to address pull down units at this time, and suggested this may need to be addressed separately from CRE or alongside blast

[20] ''Holding temperature application'' means a use of commercial refrigeration equipment other than a pull-down temperature application, except a blast chiller or freezer. 10 CFR 431.62 (*see also* 42 U.S.C. 6311(9)(B)).

chillers and freezers given the unique application. (*Id.*)

True commented that 75 °F ambient temperature, 55 percent relative humidity, and pull down of 90 °F products is typical. (True, No. 4, p. 14) True commented that this category is irrelevant if the models meet the DOE energy conservation standards for holding temperature applications, and that this category should not exist. (*Id.*)

The Joint Commenters expressed support for DOE developing a test procedure to verify pull-down performance. (Joint Commenters, No. 8, p. 2) The Joint Commenters stated that the test procedure contains a definition for ''pull-down temperature application,'' but that there is no procedure to verify whether a unit meets that definition, such that it would make sense to develop a pull-down test procedure to verify performance so that a manufacturer, DOE, or third party can determine if a unit meets the ''pull-down temperature application'' definition. (*Id.*)

While DOE defines ''pull-down temperature application'' and has established energy conservation standards for self-contained commercial refrigerators with transparent doors for pull-down temperature applications, no models are currently certified to DOE in this equipment class.[21] DOE has not established energy conservation standards for other categories of CRE for pull-down temperature applications.

DOE recognizes that manufacturers may represent their models as for use in pull-down temperature applications rather than holding temperature applications. To ensure appropriate application of DOE's definitions, DOE is proposing a method to determine whether a model meets the definition of ''pull-down temperature application.'' Specifically, DOE is proposing to include product-specific enforcement provisions for CRE, as discussed further in section III.J of this NOPR, and proposes to include a section to specify how DOE would confirm whether a commercial refrigerator meets the definition of pull-down temperature application.

As stated, the pull-down temperature application definition requires that a model be capable of cooling a full load of 12 ounce beverage cans from 90 °F to an average stable temperature of 38 °F in 12 hours or less. To confirm this capability, DOE is proposing to specify in 10 CFR 429.134 that a classification as pull-down temperature application is valid based on meeting the pull-down temperature application definition by:

(1) measuring the temperatures of 12-ounce beverage cans loaded into the commercial refrigerator at locations consistent with those specified in ASHRAE 72–2018R (*i.e.,* those temperature measurement locations required for test simulators during DOE testing of other commercial refrigerators);

(2) operating the commercial refrigerator under the required commercial refrigerator test conditions (*e.g.,* 75.2 °F ± 1.8 °F dry-bulb temperature) and at the control setting necessary to achieve a stable integrated average temperature of 38 °F, prior to loading;

(3) fully loading the commercial refrigerator with 12-ounce beverage cans maintained at 90 °F ± 2 °F;

(4) determining the duration of pull-down (which must be 12 hours or less) starting from closing the commercial refrigerator door after completing the 12-ounce beverage can loading until the integrated average temperature reaches 38 °F ± 2 °F; and

(5) determining an average stable temperature of 38 °F by operating the commercial refrigerator for an additional 12 hours after initially reaching 38 °F ± 2 °F with no changes to control settings, and determining an integrated average temperature of 38 °F ± 2 °F at the end of the 12 hour stability period.

The proposed product-specific enforcement provisions are consistent with the existing definition of pull-down temperature application, but would provide additional clarity regarding how DOE would determine whether a commercial refrigerator could be classified as such.

DOE requests comment on the proposed product-specific enforcement provisions regarding how DOE would determine whether a model meets the pull-down temperature application definition. DOE also requests data and comment on whether the proposed product-specific enforcement provisions sufficiently differentiate pull-down temperature applications from holding temperature applications.

3. Blast Chillers and Blast Freezers

As stated, CRE is equipment that, in part, is designed for holding temperature applications. (42 U.S.C. 6311(9)(A)(vi)) EPCA defines ''holding temperature application'' as use of commercial refrigeration equipment other than a pull-down temperature application, except a blast chiller or freezer. (42 U.S.C. 6311(9)(B)) Per the definition, ''holding temperature application'' includes blast chillers and blast freezers, even if such equipment meets the criteria of ''pull down temperature application.''

In general, blast chillers and blast freezers are commercial refrigeration equipment with solid doors intended for the rapid temperature pull-down of hot-food products.

Blast chiller and blast freezer operation is typically characterized by three cycles. The first cycle pulls the air temperature within the unit down until it reaches a target air temperature set by the manufacturer (*e.g.,* 0 °F for blast chillers and −28 °F for blast freezers). This target air temperature within the unit is maintained until the food reaches a certain temperature, set by the manufacturer, as measured by the unit's temperature probe. Once the food reaches a certain temperature, the second cycle begins by allowing the air temperature within the unit to drift up until it reaches the same temperature as the target food temperature (*e.g.,* 38 °F for blast chillers and 0 °F for blast freezers). Once the food reaches the target food temperature, the last cycle begins by proceeding to a holding pattern during which the blast chiller or blast freezer behaves similar to a typical CRE—*i.e.,* cycling the refrigeration system to maintain a target temperature.

Within the general sequence of operations, many blast chillers and blast freezers provide users options to alter the specific pull down profile based on the food load. For example, a ''soft chill'' mode may provide a slower temperature pull-down intended for more delicate food, as compared to a ''hard chill'' mode that cools food as quickly as possible.

ASHRAE has established a standard project committee (''SPC'') to consider the development of an industry test standard for this equipment: SPC 220P, *Method of Testing for Rating Small Commercial Blast Chillers, Chiller-Freezers, and Freezers* (''ASHRAE 220'').[22] DOE is participating in this process and is aware of a draft test standard underway that contains certain definitions, requirements, and procedure. DOE will consider referencing the final version of the SPC 220P standard when it is made publicly available.

a. Definitions

DOE does not define blast chiller or blast freezer. The California Code of

[21] Based on DOE's Compliance Certification Database (accessed January 23, 2022), available at *www.regulations.doe.gov/certification-data/#q=Product_Group_s%3A*.

[22] See *www.ashrae.org/technical-resources/standards-and-guidelines/project-committee-interim-meetings.*

Regulations provides the following definition for a blast chiller:

• *Blast chiller*—a refrigerator designed to cool food products from 140 °F to 40 °F within four hours. (CCR, Title 20, section 1602)

The SPC for ASHRAE 220 has provided the following tentative definitions for blast chiller and blast freezer, and a related term:

• *Blast chiller*—a rapid pull down cooler designed to cool food to a safe refrigerated temperature (typically between 32 °F and 41 °F), but not freeze it.

• *Blast freezer*—a rapid pull down cooler designed to freeze food.

• *Rapid pull down cooler*—commercial refrigeration equipment intended for the rapid intermediate chilling or freezing of hot food products within a specified time period and holding the food at a safe temperature when not engaged in the chilling or freezing process.

NSF 7–2019 provides the following performance specification for rapid pull-down refrigerators and freezers:

• *Rapid pull-down refrigerators and freezers*—capable of reducing the internal temperature of their contents from 135 °F to 40 °F within a period of 4 hours or in the time specified by the manufacturer, whichever is less.

In the June 2021 RFI, DOE requested comment on whether definitions are needed for blast chillers and blast freezers to further delineate the equipment subject to the DOE test procedures and standards. 86 FR 31182, 31188. If definitions are needed, DOE requested comment on the appropriate definitions for blast chillers and blast freezers, including how to differentiate such equipment from CRE currently subject to testing and compliance with DOE's energy conservation standards. 86 FR 31182, 31188–31189.

NEEA commented in support of DOE establishing a definition for blast chillers and blast freezers. (NEEA, No. 5, p. 3) NEEA commented that the scope of the pull-down temperature application definition is better suited to focus exclusively on beverage merchandisers and coolers, due to the differences in intended operation of blast chillers and freezers. *Id.* NEEA commented that delineating both the definition and test procedure to highlight the different use cases of pull-down equipment and blast chillers will lead to more representative energy use projections. *Id.*

The Joint Commenters stated that blast chillers and blast freezers have oversized refrigeration systems compared to other CRE, such that blast chillers and freezers use more energy compared to other equipment with similar volumes. (Joint Commenters, No. 8, p. 2)

Based on the comments from interested parties and DOE's review of existing State definitions, tentative and established industry definitions, and equipment available on the market, DOE has tentatively determined that the characteristic of blast chillers and blast freezers that differentiate this equipment from other categories of CRE are the oversized refrigeration systems that allow for the rapid temperature pull-down of hot food products within a specified time period. Blast chillers and blast freezers specifically differ from other types of CRE intended for pull-down temperature applications because of the intended product (hot food product for blast chillers and blast freezers versus 12 ounce beverage cans for pull-down temperature applications), initial product temperature (minimum 135 °F [23] for blast chillers and blast freezers versus 90 °F for pull-down temperature applications), and intended product storage duration (minimal storage duration for blast chillers and blast freezers versus long-term storage duration for pull-down temperature applications).

As discussed, blast chillers and blast freezers provide rapid cooling to ensure hot food is quickly pulled down to safe refrigerated storage temperatures. DOE tentatively identified the capability to pull down hot food from 135 °F to 40 °F within four hours as the primary operating characteristic of blast chillers and blast freezers. This is consistent with the performance specification for rapid pull-down refrigerators and freezers specified in NSF 7–2019, the California definition, and tentative definitions provided by the SPC for ASHRAE 220. Although DOE is not proposing to test blast chillers and blast freezers according to NSF 7–2019, as discussed in the following section, DOE expects that any blast chiller or blast freezer meeting the NSF 7–2019 performance specification would be capable of pulling down hot food from 135 °F to 40 °F within four hours when tested as proposed in this NOPR. As discussed in section III.C.1.b, DOE is proposing a lower ambient temperature condition than the ambient temperature condition specified in NSF 7–2019.

To delineate blast chillers and blast freezers from other categories of CRE, including from CRE designed for pull-down temperature applications, DOE is proposing to define the terms ''blast chiller'' and ''blast freezer.'' DOE is proposing definitions for these terms that combine parts of existing definitions, add language for consistency with DOE's existing CRE definitions, and include further specificity regarding the characteristics of this equipment. Specifically, DOE is proposing to add the following definitions to 10 CFR 431.62:

''Blast chiller'' means commercial refrigeration equipment, other than a blast freezer, that is capable of the rapid temperature pull-down of hot food products from 135 °F to 40 °F within a period of four hours, when measured according to the DOE test procedure.

''Blast freezer'' means commercial refrigeration equipment that is capable of the rapid temperature pull-down of hot food products from 135 °F to 40 °F within a period of four hours and capable of achieving a final product temperature of less than 32 °F, when measured according to the DOE test procedure.

DOE seeks comment on the proposed definitions of ''blast chiller'' and ''blast freezer.''

b. Test Methods

DOE has reviewed the ASHRAE 220 test method in development to determine the suitability of the test method for a DOE test procedure. The draft ASHRAE 220 test method determines the pull-down energy consumption per pound of food product, hot food product temperature pull-down performance, and other performance factors for self-contained commercial blast chillers and blast freezers that have a refrigerated volume of up to 500 ft^3. DOE understands that the ASHRAE 220 test method has certain deviations from DOE's current CRE test procedures and ASHRAE 72–2018R.

In the June 2021 RFI, DOE stated that it was not aware of any existing test methods for assessing the energy performance of blast chillers and blast freezers but acknowledged the ongoing industry work to develop ASHRAE 220. 86 FR 31182, 31189. DOE requested information on typical blast chiller and blast freezer operation to evaluate any eventual test methods available for this equipment. *Id.*

NEEA commented in support of collaboration between DOE and EPA regarding test procedures for blast chillers and freezers. (NEEA, No. 5, p. 3) The CA IOUs commented that DOE should work with the ASHRAE 220 committee to finalize an approach for evaluating the performance of blast chillers and freezers that will be consistent with DOE's statutory

[23] See NSF/ANSI 7—2019, ''Commercial Refrigerators and Freezers''.

requirements for a test procedure. (CA IOUs, No. 10, p. 4) The CA IOUs commented that ASHRAE 220 was expected to be published in late 2021, and that International Organization for Standardization (''ISO'') 22042:2021, (''ISO 22042:2021''), ''Blast chiller and freezer cabinets for professional use—Classification, requirements and test conditions was published in March 2021. *Id.* The CA IOUs provided a comparison of the two standards. *Id.*

NEEA commented that DOE's test procedure for pull-down temperature application is only reflective of steady state operation and does not account for energy usage in pull-down mode or percentage of time in each of the two modes. (NEEA, No. 5, p. 3) NEEA commented that DOE should study pull-down conditions of blast chillers and blast freezers to ensure the test procedure represents actual usage. (*Id.*)

The CA IOUs commented that DOE should focus on self-contained blast chillers and freezers, stating that the ASHRAE 220 test method is geared toward this equipment configuration, and that this is the predominant configuration in terms of market share in food service applications. (CA IOUs, No. 10, p. 5)

DOE has tentatively determined that test procedures that account for the pull-down operation of blast chillers and blast freezers are appropriate. As discussed in section III.C.3.a, the primary function of blast chillers and blast freezers is the rapid cooling of hot food product and minimal storage duration rather than long-term storage duration. Consistent with comments from interested parties, DOE has considered the draft ASHRAE 220 standard as the basis for many of the test procedure proposals.

DOE has also reviewed the ISO 22042:2021 test standard. Many of the provisions in the ISO 22042:2021 method are similar to those included in the draft ASHRAE 220 (*e.g.,* ambient temperature, starting food load temperature, final blast freezer temperature). DOE has tentatively determined that the provisions in draft ASHRAE 220 provide a more representative basis for testing (*e.g.,* blast chiller target temperature of 38 °F rather than 50 °F) and would limit test variability as compared to ISO 22042:2021 (*e.g.,* using a well-defined food simulator test load rather than actual food and defining door openings for pan loading).

DOE has also participated in EPA's specification review process to establish version 5.0 Eligibility Criteria for commercial refrigerators and freezers. EPA considered including blast chillers and blast freezers as part of the version 5.0 Eligibility Criteria,[24] but did not include them in the specification due to the lack of a standardized test procedure.

Consistent with the tentative scope of ASHRAE 220, DOE is proposing test procedures for self-contained commercial blast chillers and blast freezers that have a refrigerated volume of up to 500 ft^3. DOE is proposing to incorporate certain provisions from draft ASHRAE 220 and certain deviations, as discussed in the following sections. DOE understands that, to the extent feasible, ASHRAE 220 will likely harmonize with requirements included in ASHRAE 72–2018R. For this reason, DOE is proposing to refer to ASHRAE 72–2018R for certain test requirements rather than using the approach in the ongoing draft ASHRAE 220. The intent of these proposals is to harmonize with the eventual ASHRAE 220 final test standard approach.

To avoid confusion regarding testing of other CRE, DOE is also proposing to establish the test procedure for blast chillers and blast freezers as a new appendix D to subpart C of 10 CFR part 431. DOE is also proposing to refer to the proposed appendix D as the test procedure for blast chillers and blast freezers in 10 CFR 431.64.

DOE seeks comment on the proposal to establish test procedures for self-contained commercial blast chillers and blast freezers that have a refrigerated volume of up to 500 ft^3.

DOE seeks comment on the proposal to incorporate certain provisions from the draft ASHRAE 220 and certain deviations for the blast chillers and blast freezers test procedures.

Instruments

DOE reviewed the latest version of the draft ASHRAE 220 standard and compared it to ASHRAE 72–2018R, as shown in Table III.2, to determine appropriate instrument requirements for blast chiller and blast freezer testing.

TABLE III.2—INSTRUMENTATION REQUIREMENTS COMPARISON BETWEEN ASHRAE 220 AND ASHRAE 72–2018R

	ASHRAE 220	ASHRAE 72–2018R
Calibration	Instruments shall be calibrated traceable to National Institute of Standards and Technology (''NIST'') standards annually.	Measurements from the instruments shall be traceable to primary or secondary standards calibrated by NIST (or other rating standards). Instruments shall be re-calibrated on regular intervals that do not exceed the intervals prescribed by the instrument manufacturer, and with an interval no longer than 1 year.
Temperature	Accuracy of temperature measurements shall be within ±1.4 °F. Accuracy of temperature-difference measurements shall be within ±0.2 °F. Temperature measurements not specified shall be made per ANSI/ASHRAE Standard 41.1.2.	Required Accuracy: ±1.4 °F. Temperature measurement methods and instruments shall be applied and used in accordance with ASHRAE Standard 41.1–2020.
Time	Time measurements shall be made with an accuracy of ±0.5% of the time period being measured.	Required Accuracy: ±0.5% of time period measured.
Energy	Electrical energy measurements shall be made with instruments accurate to ±2% of the quantity measured.	Required Accuracy: must be measured with an integrating watt-hour meter with accuracy ±2.0% of the quantity measured and graduated to 0.01 kWh.
Electrical supply potential and supply frequency.	None specified	Required Accuracy: ±2.0% of the quantity measured.

Generally, ASHRAE 72–2018R has the same instrumentation requirements as draft ASHRAE 220. DOE understands that ASHRAE 220 intends to harmonize with ASHRAE 72–2018R to the extent possible to maintain consistent test

[24] *See* the Version 5.0 Specification and Test Method Discussion Guide, December 2020, at *www.energystar.gov/sites/default/files/ENERGY%20STAR%20Commercial%20Refrigerators%20and%20Freezers%20V5.0%20Discussion%20Guide.pdf.*

requirements across similar equipment types. Because ASHRAE 72–2018R provides greater detail on the instrumentation requirements, and DOE expects that the final ASHRAE 220 standard will likely adopt the ASHRAE 72–2018R requirements, DOE is proposing to reference section 4 and the relevant portions of Appendix A of ASHRAE 72–2018R for blast chiller and blast freezer instrumentation requirements. ASHRAE 72–2018R provides additional requirements for instruments that are not necessary for testing blast chillers and blast freezers (*e.g.,* air velocity, radiant heat, dry-bulb temperature gradient, and test chamber illuminance). DOE is proposing to incorporate requirements only for instruments necessary to test blast chillers and blast freezers (*i.e.,* those listed in Table III.2).

DOE seeks comment on the proposal to reference section 4 and the relevant portions of Appendix A of ASHRAE 72–2018R for instrumentation requirements for the blast chiller and blast freezer test procedures.

Test Conditions

Blast chillers and blast freezers are typically intended for use only in commercial kitchens, as compared to other categories of CRE, which are typically used in either commercial kitchens or in customer-facing environments.

In the June 2021 RFI, DOE requested comment and supporting data on the typical ambient conditions experienced by blast chillers and blast freezers. 86 FR 31182, 31189.

NEEA commented that ASHRAE 220 is working to answer some of the questions posed by DOE, including establishing starting food temperatures, blast chiller temperatures, and ambient temperatures. (NEEA, No. 5, p. 3)

ASHRAE 220 specifies different test conditions for testing blast chillers and blast freezers compared to the current DOE CRE test procedures, as illustrated in Table III.3.

TABLE III.3—AMBIENT TEMPERATURE AND HUMIDITY TEST CONDITIONS COMPARISON

	ASHRAE 220	DOE's current CRE test procedure
Dry Bulb	Measured at point T_A; Average: 86.0 °F ± 1.8 °F; Individual: 86.0 °F ± 3.6 °F.	Measured at point T_A for open; CRE and T_B for closed CRE; Average: 75.2 °F ± 1.8 °F; Individual: 75.2 °F ± 3.6 °F.
Humidity	No test condition specified	*Wet Bulb* measured at point T_A for open CRE and T_B for closed CRE; Average: 64.4 °F ± 1.8 °F; Individual: 64.4 °F ± 3.6 °F.

The dry-bulb is required to be measured in ASHRAE 220 at the same point (T_A) as specified in Section 6.1 of ASHRAE 72–2018R. ASHRAE 220 does not specify the type of thermocouple to be used when taking dry-bulb measurements. ASHRAE 72–2018R specifies that the thermocouples used to measure dry-bulb temperatures shall be in thermal contact with the center of 1.6 ounces cylindrical brass slug with a diameter and height of 0.75 inches. The brass slugs shall be placed at least 0.50 inches from any heat-conducting surface.

DOE has tentatively determined that the test conditions specified in ASHRAE 220 are more representative of actual blast chiller and blast freezer operation as compared to the existing CRE test procedure conditions. As stated, blast chillers are typically only used in commercial kitchens, whereas other conventional CRE are used in a range of environments.

In response to the June 2021 RFI, the CA IOUs referenced a 2012 ASHRAE research project [25] benchmarking the thermal conditions in 100 commercial kitchens in the United States that found the average temperature in preparation areas ranged from 72 °F to 79 °F, while the average temperature in cooking areas ranged from 79 °F to 93 °F. (CA IOUs, No. 10, p. 2–3) The conditions specified in ASHRAE 220 are consistent with the commercial kitchen data in the ASHRAE report.

DOE recognizes that harmonizing test conditions across different CRE categories may provide users with measures of energy use that can be compared on a consistent basis. However, given the particular application of blast chillers and blast freezers in rapidly lowering the temperature of hot food products, it is not expected that other CRE would serve as a substitute for blast chillers and blast freezers (and vice versa). Moreover, as indicated by the 2012 ASHRAE report, the test conditions in the draft ASHRAE 220 are more representative for blast chillers and blast freezers than the test conditions applicable to CRE generally.

Because blast chillers and blast freezers experience different ambient conditions than other types of CRE, and because the proposed test procedures for blast chillers and blast freezers would use a different energy use and capacity metric, DOE is proposing to require the representative dry-bulb temperatures specified in the tentative ASHRAE 220 draft. DOE is also proposing to incorporate section 6.1 and Figure 6 of ASHRAE 72–2018R to specify the point T_A where the dry-bulb temperatures are to be measured and to specify the dry-bulb thermocouple setup.

DOE seeks comment on the proposal to require the dry-bulb temperatures specified in the tentative ASHRAE 220 draft and incorporate section 6.1 and Figure 6 of ASHRAE 72–2018R to specify the point T_A where the dry-bulb temperatures are to be measured and the type of thermocouple to use when measuring dry-bulb in the blast chillers and blast freezers test procedures.

ASHRAE 220 specifies the same requirements for the power supply, voltage and frequency, as ASHRAE 72–2018R. Specifically, ASHRAE 220 specifies that the rated voltage be maintained at an average of ± 2.0 percent over the duration of the test and individual recorded voltages be within ± 4.0 percent of the rated voltage. ASHRAE 220 specifies that the rated frequency be maintained within ±1 percent. Because ASHRAE 72–2018R specifies the same requirements for voltage and frequency, DOE is proposing to incorporate the portions of Appendix A in ASHRAE 72–2018R, which specify the requirements for voltage and frequency.

DOE seeks comment on the proposal to incorporate the portions of Appendix A in ASHRAE 72–2018R which specify the requirements for voltage and frequency in the blast chillers and blast freezers test procedures.

ASHRAE 72–2018R specifies additional test conditions that ASHRAE 220 does not specify. These include requirements for air currents, radiant

[25] ASHRAE RP–1469, ''Thermal Comfort in Commercial Kitchens,'' Final Report, January 6, 2012, page 24.

heat, dry-bulb temperature gradient, and test chamber illuminance. DOE expects that these requirements in ASHRAE 72–2018R are primarily intended to limit variability of testing for CRE without doors or with transparent doors. DOE is only aware of blast chillers and blast freezers with solid doors, and therefore has tentatively determined that the additional test conditions in ASHRAE 72–2018R are not necessary for blast chiller and blast freezer testing, consistent with the draft of ASHRAE 220.

DOE seeks comment on whether any additional test conditions are appropriate for blast chiller and blast freezer testing, including those specified in sections 6.2, 6.3, and Appendix A in ASHRAE 72–2018R.

Test Setup, Capacity, and Loading

The ASHRAE 220 draft specifies certain test unit setup instructions for components and accessories, electrical loads, condensate pan heaters and pumps, and crankcase heaters which are based on Sections 5.3, 5.3.1, 5.3.5, and 5.3.15 in ASHRAE 72–2018R. DOE notes that Sections 5.3 and 5.3.5 of ASHRAE 72–2018R contain minor differences from the draft ASHRAE 220. Section 5.3 of ASHRAE 72–2018R refers to installing all necessary components and accessories prior to loading the storage and display areas with test simulators and filler material, whereas ASHRAE 220 does not use test simulators and filler material. Section 5.3.5 of ASHRAE 72–2018R refers to a self-contained refrigerator instead of a blast chiller or blast freezer and does not specify that the condensate pan shall be emptied before testing (this instruction is provided in Section 7.2.3 of ASRHAE 72–2018R) and that if a condensate heater is used during the test, it shall be recorded.

ASHRAE 220 specifies that the manufacturer's recommendation on clearances shall be followed on all sides with a minimum of 3 feet on the door(s) opening sides. The current DOE CRE test procedures do not specify any clearance requirements. Section 5.2 and Appendix A of ASHRAE 72–2018R specify that there must be greater than or equal to 59.1 inches ± 1 inch of clearance from the front of the unit under test and a vertical partition or wall shall be located at the minimum clearance, ± 0.5 inches, as specified in the installation instructions. Section 5.2 also provides that if the installation instructions do not provide a minimum clearance, the vertical partition or wall shall be located 4 ± 0.5 inches from the sides or rear of the cabinet and extend at least 12 ± 0.5 inches beyond each side of the cabinet from the floor to not less than 12 ± 0.5 inches above the top of the cabinet.

DOE has tentatively determined that because ASHRAE 72–2018R provides similar, equal, or greater detail on the installation and settings, clearance, and components and accessories requirements as compared to the draft of ASHRAE 220, the ASHRAE 72–2018R instructions are appropriate for DOE testing. DOE also understands that, to the extent feasible, ASHRAE 220 intends to harmonize with ASHRAE 72–2018R requirements, and therefore will likely adopt similar instructions in the final version of the standard. DOE is proposing to incorporate Sections 5.1, 5.2, 5.3 (including sub-Sections 5.3.1 to 5.3.17), and the relevant portions of Appendix A of ASHRAE 72–2018R for testing blast chillers and blast freezers with the following deviations:

- The term ''refrigerator'' shall instead refer to ''blast chiller'' or ''blast freezer,'' as applicable.
- For Section 5.3 of ASHRAE 72–2018R, replace ''all necessary components and accessories shall be installed prior to loading the storage and display areas with test simulators and filler material'' with ''all necessary components and accessories shall be installed prior to precooling the unit under test.''
- Section 5.3.5 would be included with the additional requirement that the condensate pan be emptied before precooling the unit under test.

DOE seeks comment on the proposal to incorporate Sections 5.1, 5.2, 5.3 (including sub-sections 5.3.1 to 5.3.17), and the relevant portions of Appendix A of ASHRAE 72–2018R, with the proposed deviations, for the blast chillers and blast freezers test procedures.

Appendix A of ASHRAE 72–2018R specifies electrical measurements at the equipment terminals. ASHRAE 220 specifies the following electrical measurement locations: at the plug-in location for units with a standard wall plug, or at the terminal box for units that are hard wired to the building electrical system. Because the electrical measurement location in Appendix A of ASHRAE 72–2018R is similar to ASHRAE 220, DOE expects that the ASHRAE 72–2018R approach is the likely final approach to be used in the eventual final ASHRAE 220 standard. For that reason, DOE is proposing to incorporate the relevant portions of Appendix A of ASHRAE 72–2018R for the electrical measurement locations.

DOE seeks comment on the proposal to incorporate the relevant portions of Appendix A of ASHRAE 72–2018R for the electrical measurement locations for the blast chillers and blast freezers test procedures.

ASHRAE 220 provides instructions for measuring the gross refrigerated volume of blast chillers and blast freezers. The gross refrigerated volume is calculated by multiplying the internal length, width, and height of the cabinet excluding panels and space occupied by the evaporator or evaporator fan. Appendix C of AHRI 1200–202X specifies instructions for determining the refrigerated volume of display merchandisers and storage cabinets. DOE has reviewed the instructions in AHRI 1200–202X for determining refrigerated volume and has initially determined that the instructions can be applied to blast chillers and blast freezers because of the similar construction of these CRE. Based on this initial determination, DOE is proposing to refer to AHRI 1200–202X for measuring the refrigerated volume of blast chillers and blast freezers.

DOE seeks comment on the proposal to reference AHRI 1200–202X for measuring the refrigerated volume of blast chillers and blast freezers.

ASHRAE 220 specifies that the standard product vessel shall be a 12 inch by 20 inch by 2.5 inch 22 gauge or heavier and 300 series stainless steel pan. ASHRAE 220 states that if the test unit is not capable of holding the standard product pan, the manufacturer's recommended pan size is used, conforming as closely as possible to the standard product load. Based on a review of blast chillers and blast freezers available on the market, DOE observed that all units are intended for use with food pans, and nearly all units available can accommodate the specified standard pan sizes. DOE has tentatively determined that the pans as specified in ASHRAE 220 are representative of typical use and is proposing to incorporate the standard product pan specifications included in the draft of ASHRAE 220.

DOE seeks comment on the proposal to incorporate the standard product pan specifications in ASHRAE 220 for the blast chillers and blast freezers test procedures.

ASHRAE 220 specifies that the manufacturer's recommended maximum 12 inch by 20 inch by 2.5 inch pan capacity should be used for testing. DOE has reviewed the ASHRAE 220 specifications and equipment available on the market. Based on DOE's review, additional specifications may be needed to determine how many standard product pans are used in the test unit. The number of standard product pans that would be used for testing is

dependent on the specified product capacity of the test unit based on food weight. The ASHRAE 220 committee tentatively determined that having a uniform food simulator thickness across all standard product pans is important for repeatable and comparable results, manufacturer design parameters, and consistency with European blast chiller and blast freezer testing requirements.[26] The ASHRAE 220 committee tentatively concluded that a uniform food simulator thickness of 2 inches in the standard product pan (*i.e.,* filled to within 0.5 inch of the top of the pan) is appropriate. Based on this conclusion, the number of pans required for testing blast chillers and blast freezers would be determined by the number of standard product pans filled with the standard food simulator load to 2 inches deep that can fit in the blast chiller or blast freezer without exceeding the manufacturer's recommended capacity. Because this approach could potentially require the tested capacity to be smaller than the manufacturer's stated capacity, if the stated capacity is not evenly divisible by the number of pans, the ASHRAE 220 committee considered allowing for one additional pan that has a thickness less than 2 inches which would make up the difference to meet the manufacturer's rated capacity but that this additional pan would not require temperature measurement. Based on the discussion from the ASHRAE 220 committee, DOE proposes that the number of pans required for testing blast chillers and blast freezers be determined by the number of standard product pans filled to 2 inches deep with food simulator product that can be loaded into the blast chiller or blast freezer without exceeding the manufacturer's stated food load capacity by weight, plus one additional standard product pan, if needed, to meet the manufacturer's stated food load capacity.

DOE seeks comment on the proposed method to determine the number of pans required for testing blast chillers and blast freezers.

ASHRAE 220 specifies that the tested product capacity is determined based on loading the test unit with the maximum number of pans with food product up to the manufacturer's recommended maximum food product weight capacity. The food product weight does not include the weight of the pans.

Consistent with the comment from the CA IOUs, the ASHRAE 220 committee determined that blast chiller and blast freezer capacity based on food product weight is relevant in addition to refrigerated volume because the throughput of food product by weight is the primary function provided to users, as compared to long-term refrigerated storage volume for typical CRE. Blast chillers and blast freezers with the same volume may have different pull-down capacities by weight depending on the design of the cooling system.

Based on participation in the ASHRAE 220 committee, DOE expects that manufacturers specify capacity by food weight based on the maximum food load that can be loaded into the blast chiller or blast freezer while meeting the performance requirement of NSF 7–2019. DOE has reviewed the ASHRAE 220 specifications and equipment available on the market and tentatively determines that additional specifications may be needed to determine the product capacity used during the test. DOE is proposing that when determining the product capacity, all manufacturer literature that is included with the unit would be reviewed, and the largest product capacity stated in the literature would be used. If the unit is able to operate as both a blast chiller and a blast freezer in different operating modes and the literature specifies different product capacities for blast chilling and blast freezing, the largest capacity stated for the respective operating mode during the test would be used.

If no product capacity is stated in the manufacturer literature, DOE is proposing that the product capacity be represented by the maximum number of 12 inch by 20 inch by 2.5 inch pans that can fit in the test unit with each pan filled 2 inches deep with product, consistent with the ASHRAE 220 approach, with capacity determined as the sum of the food weights within the individual pans loaded for testing. As discussed further in a subsequent section, DOE is proposing use of a food simulator. The tested capacity would not include the weight of the pans, temperature sensors, or wires. If upon testing a blast chiller or blast freezer with no stated product capacity is not capable of pulling down temperatures from 135 °F to 40 °F within a period of four hours with the load specified in the proposed test procedure, DOE proposes that one pan be removed until the unit achieves the specified pull-down operation.

To ensure repeatability of testing, DOE is proposing that the tested capacity (determined as the sum of the food weights for individual pans loaded for testing) be within ±5 percent or ±2 pounds of the rated capacity, whichever is less. DOE acknowledges that the actual weight of food simulator may be slightly different in each pan because each pan may not be loaded with food simulator to the exact same specified thickness. Specifying a tolerance on the overall tested capacity would ensure that the total food load by weight is consistent from test to test.

DOE seeks comment on the proposal to determine the tested product capacity for the blast chillers and blast freezers test procedures.

ASHRAE 220 specifies where to place the standard product pans in the blast chiller or blast freezer if a full load of pans is not needed to meet the manufacturer's stated capacity. ASHRAE 220 specifies that if there are fewer pans than there are rack spaces in the unit, the pans shall be placed evenly in the unit with top and bottom shelves occupied. If not all shelves are occupied by pans, the pan locations shall be recorded. The ASHRAE 220 committee has also discussed specifying that pans would be loaded without pans nesting on each other and without touching the top and the bottom of the cabinet. DOE has reviewed the ASHRAE 220 specifications, ASHRAE 220 committee discussions, and equipment available on the market. Based on DOE's review, additional specifications may be needed to determine where to place the standard product pans. DOE proposes that once the number of standard product pans needed for the test has been determined, the pans should be spaced evenly throughout each vertical column of rack positions in the test unit without the pans touching any other pans and without the pans touching the top and the bottom of the cabinet. For test units that have an additional pan with a product thickness of less than 2 inches, DOE proposes to require placing the additional pan as close to the middle rack position as possible while maintaining an even distribution of all pans. DOE also proposes that if not all rack positions are occupied by pans, the pan locations shall be recorded.

DOE seeks comment on the proposed method for distributing the pans within the test unit's cabinet for testing blast chillers and blast freezers.

ASHRAE 220 specifies that if multiple pans are used per level (*i.e.,* pans can be loaded side-by-side at the same level), only one pan needs to be measured with product temperature sensors per level. ASHRAE 220 provides a figure illustrating an example for test units with multiple pans per level, indicating which pans would include thermocouples. In the figure, each level includes two side-by-side pans, and the thermocouple location is staggered such that it alternates between the left and right pan at each level, and such that

[26] *See* ISO 22042:2021.

each vertical column does not have two measured pans in sequential levels.

DOE has reviewed the draft ASHRAE 220 pan loading approach and has tentatively determined that it provides a representative measure of food load temperature within the blast chiller or blast freezer while limiting test burden. DOE acknowledges that food temperatures within the cabinet may vary depending on proximity to the evaporator or airflow pathway through the cabinet but expects that measuring one pan per level and staggering the measured pans would ensure a representative food temperature average would be measured during testing. DOE has also initially determined that this approach would limit test burden by avoiding the need for every pan to include a thermocouple, thereby avoiding the setup of the thermocouple within the pan and the routing of additional thermocouple wires from inside the cabinet.

Based on the review of ASHRAE 220, DOE proposes to incorporate the ASHRAE 220 approach with additional instructions. DOE proposes that if multiple standard product pans are used per level, only one pan per level be measured with a temperature sensor. DOE proposes to specify that the pan measured should alternate vertical columns so that each vertical column does not have two measured pans in sequential levels and that if a test unit uses an additional pan that has a thickness less than 2 inches, this additional pan would not be measured for product temperature.

DOE seeks comment on the proposed method to determine which standard product pans would include temperature measurement sensors for the blast chillers and blast freezers test procedures.

ASHRAE 220 specifies measuring the product temperature in the geometric center of any measured pans and provides an example figure illustrating the temperature sensor location in a measured pan and, in particular, showing the unweighted thermocouple as being placed ⅝ inch above the bottom of the pan. ASHRAE 220 provides that temperature sensor leads must allow for the transfer of pans from the heating compartment to the test unit cabinet.

DOE proposes to incorporate this approach with additional instruction to specify explicitly details that are shown visually in the example figure in ASHRAE 220. DOE proposes that product temperature shall be measured in the geometric center of the product pan, ⅝ inches above the bottom of the pan, that the temperature sensor shall be unweighted, and that the temperature sensor leads shall be secured to the bottom of the pan while also allowing for the transfer of the pan from the heating source into the test unit's cabinet.

DOE seeks comment on the proposed method of measuring the product temperature in the measured pans for the blast chillers and blast freezers test procedures.

ASHRAE 220 specifies instructions to prepare the product medium mixture to be placed in the standard product pans as follows:

(a) Determine the manufacturer's recommended maximum food product weight capacity.

(b) Prepare a 20 percent by volume propylene glycol (1,2-Propanediol) mixture in water.

(c) In each pan, pour the propylene glycol mixture over #20 mesh southern yellow pine sawdust to create a 22 percent to 78 percent by mass slurry. Mixture must be pre-portioned for each individual pan to avoid large batch component separation.

(d) Mix until the sawdust becomes completely saturated and leave uncovered in the pan. The weight of the mixture shall correspond with the determined weight. Record the weight of each pan, weight of the mixture, and number of pans to be loaded. Weight of the thermocouples shall be omitted.

Note: Acceptable Sawdust Specification Example: American Wood Fibers brand, #20 Mesh Pine Sawdust (50 lbs bags), Item # 30020205018

(e) Verify that the pan thermocouple is fully submerged in the mixture, reposition the thermocouple in the geometric center of the mixture if it is not.

The ASHRAE 220 committee developed the food simulator specifications based on the food load specified in NSF 7–2019 for rapid pull-down refrigerators and freezers. Because this test load is already in use for this equipment, and because its heat transfer characteristics are similar to actual food loads, DOE has tentatively determined that the food simulator load specified in the ASHRAE 220 draft is representative for testing blast chillers and blast freezers.

DOE proposes to incorporate the ASHRAE 220 approach with additional specifications to ensure repeatability. As stated, each pan would be loaded to 2 inches of food load thickness (*i.e.,* depth) within the pan and an additional pan would be loaded as needed to meet the manufacturer's stated capacity. DOE is proposing that each pan shall be weighed prior to heating, before and after the food product simulator is added. A cumulative total of the product weight shall be calculated and the pans shall continue to be loaded with the product mixture until the cumulative total reaches the manufacturer's stated capacity (the total product weight shall be within ± 5 percent or ± 2 pounds of the manufacturer's stated capacity, whichever is less).

DOE seeks comment on the proposed method for preparing the product medium mixture to be placed in the standard product pans for the blast chillers and blast freezers test procedures.

Test Conduct

In response to the June 2021 RFI, DOE received a comment from the CA IOUs stating that test engineers at Southern California Edison's Foodservice Technology Center indicated that production kitchens that use blast chillers or blast freezers are often designed to maximize throughput of hot food products (usually cooked in combination ovens or rack ovens) through the blast chiller or blast freezer, and then once the food is cooled it is typically placed in standard refrigerators or freezers for long term storage. (CA IOUs, No. 10, p. 5)

The overall test approach in the ASHRAE 220 draft includes pre-cooling the blast chiller's or blast freezer's cabinet to a pre-set or controlled operating temperature, loading of hot food pans into the blast chiller or blast freezer, and pull-down of the hot food pans to the target temperature. The ASHRAE 220 committee also considered including an operating period in which the blast chiller or blast freezer would maintain the food load at the target temperature (*i.e.,* a ''holding period''). However, consistent with the comment from the CA IOUs, the ASHRAE 220 committee determined that the primary function of the blast chiller or blast freezer is to pull-down hot food temperatures and that the prioritization of throughput through the blast chiller or blast freezer would result in less operation in holding periods. DOE has tentatively determined that the ASHRAE 220 approach is appropriate for blast chiller and blast freezer testing and is proposing to only include pre-cooling and pull-down operation within the test.

DOE seeks comment on the proposal to include pre-cooling and pull-down operating in the blast chiller and blast freezer test procedure and to not include any holding periods during testing.

ASHRAE 220 specifies that all measurements shall be continuously

recorded during the test in intervals no greater than 10 seconds. The current DOE CRE test procedures require that measurement intervals do not exceed three minutes and ASHRAE 72–2018R requires certain measurements at one-minute intervals. Because the blast chiller and blast freezer test procedure is not conducted at stable cabinet temperature conditions, as is the case for other CRE testing, DOE has tentatively determined that a shorter measurement interval is appropriate to accurately identify unit performance (*e.g.,* determining when all pans reach the target temperatures). Therefore, DOE proposes to incorporate the ASHRAE 220 approach requiring data acquisition at 10 second intervals.

DOE seeks comment on the proposed data recording rate for the blast chillers and blast freezers test procedures.

ASHRAE 220 specifies that data would be recorded once a steady-state condition is established. ASHRAE 220 specifies that the test unit stabilize at ambient temperatures for at least 24 hours before pre-cooling and that the prepared product be heated for a minimum of 8 hours in the standard product pans at the required temperature prior to loading into the blast chiller or blast freezer. Consistent with these requirements, DOE proposes that the test unit stabilize at ambient temperatures for at least 24 hours, and then data acquisition would be recorded prior to the pre-cool period. For the prepared product in the standard product pans, DOE proposes that data acquisition begin prior to the minimum 8 hour heating period.

DOE seeks comment on the proposed data collection periods for the blast chillers and blast freezers test procedures.

ASHRAE 220 specifies a procedure for pre-cooling the test unit from ambient conditions prior to pull-down operation. The test unit is to remain in the required ambient conditions for at least 24 hours before pre-cooling. The test unit's pre-cooling cycle is used, if available. For test units with more than one pre-cool cycle, the cycle used is recorded. For units without a pre-cooling cycle, an empty blast cycle should be run in its entirety. During the pre-cool cycle, the test unit's sensing probe will remain in its default or holstered position. Pre-cool is deemed complete when the test unit's pre-cool notification reports. If the test unit does not have a pre-cool cycle or pre-cool completion notification, the pre-cool is deemed complete when the compressor first cycles off. The pre-cool data to be recorded is the selected cycle name, pre-cool duration, temperature, and energy consumed.

Because the main function of a blast chiller or blast freezer is to pull down the product temperature of hot food, DOE has tentatively determined that measuring performance during the pre-cool period is not necessary, other than to determine when pre-cooling is complete. However, because pull-down testing is initiated after the completion of pre-cooling, operation during pre-cooling may impact pull-down performance. Based on DOE's review of ASHRAE 220, additional specifications regarding pre-cooling may be needed.

DOE proposes that the pre-cool cycle may be initiated on blast chillers and blast freezers once the test unit has been maintained at ambient temperatures without operating for at least 24 hours. Rather than selecting and recording any pre-cooling cycle, DOE is proposing that the fastest pre-cooling cycle be selected. DOE proposes to specify that the pre-cool cycle is complete when the test unit notifies the user that the pre-cool is complete, consistent with ASHRAE 220, but that if the test unit does not notify the user that the pre-cool cycle is complete, the pre-cool will be deemed complete when the test unit reaches 40 °F or 2 °F based on the test unit's sensing probe for blast chillers and blast freezers, respectively. DOE has tentatively determined that this approach would ensure a consistent starting point for pull-down testing from unit to unit rather than the first compressor off cycle.

For test units without any defined pre-cooling cycles, DOE is proposing that the fastest blast chilling or blast freezing cycle shall be run with an empty cabinet until the test unit reaches 40 °F or 2 °F based on the test unit's sensing probe. Consistent with ASHRAE 220, during the pre-cool cycle, the test unit's sensing probe will remain in its default or holstered position. The pre-cool test data to be recorded are the ambient conditions, pre-cool cycle selected, pre-cool duration, and final pre-cool cabinet temperature based on the test unit's sensing probe.

As stated, DOE is proposing that test procedures for blast chillers and blast freezers are to measure the energy consumed by the product temperature pull-down operation. Additionally, blast chillers and blast freezers may run multiple pull-down cycles consecutively without the need for individual pre-cooling cycles. However, DOE acknowledges that the energy consumed during the pre-cool period may be relevant to the overall energy consumption of blast chillers and blast freezers and requests comment on whether pre-cooling energy use should be measured and considered in the overall energy consumption metric for blast chillers and blast freezers.

DOE seeks comment on the proposed method to conduct the pre-cool cycle for the blast chillers and blast freezers test procedures.

ASHRAE 220 specifies instructions for loading the prepared standard product pans into the test unit. Measured standard product pans are maintained at an average temperature of 160.0 ± 1.8 °F and an individual pan temperature tolerance of 160 ± 10 °F for a minimum of 8 hours prior to being loaded into the test unit. Non-measured pans are also required to be heated for a minimum of 8 hours. The test unit door is opened for loading at 4 ± 1 minutes after the test unit completes its pre-cool cycle. ASHRAE 220 specifies that the door remain open to load all of the standard product pans for the entirety of the loading procedure. ASHRAE 220 further specifies that the door is open for 20 seconds per roll-in rack and 15 seconds per pan for roll-in and standard test units, respectively. The test unit's sensing probe is inserted into the geometric center of a standard product pan in the center level of the cabinet. If the center level has capacity for multiple pans, the probed pan should be furthest away from the evaporator. The probe must not touch the bottom of the pan or be exposed to the air. The location of the pan with the probe is recorded. The factory probe is placed so that it does not interfere with the test thermocouple measurement. The door remains closed for the remainder of the test.

DOE proposes to adopt ASHRAE 220's approach with additional specifications and certain deviations to ensure consistent testing. DOE proposes that while maintaining the temperature of the measured standard product pans prior to loading into the blast chiller or blast freezer, the non-measured standard product pans shall be placed in alternating positions with the measured standard product pans in the heating device for a minimum of 8 hours prior to being loaded into the test unit to ensure consistent product temperatures. The test unit door would be opened for loading at the specified time in ASHRAE 220, but DOE is proposing to specify more precise values, *i.e.,* 4.0 ± 1.0 minutes. DOE is proposing that the total door open period for loading pans would have a tolerance of ± 5 seconds to account for different test lab operation. DOE is proposing that the door would be fully open, based on the definition of ''fully open'' in ASHRAE 72–2018R, for the duration specified in

ASHRAE 220 to ensure test repeatability. DOE is proposing that the test unit's sensing probe would be inserted into the geometric center of the standard product pan approximately 1 inch deep in the product mixture at the median pan level in the test unit, which adds greater specificity for test repeatability. If the standard product pan at the median level is the additional pan with less than 2 inches of product thickness, DOE is proposing to specify that the closest pan or pan level that is farthest away from the evaporator fan would be used to insert the test unit's sensing probe, consistent with the ASHRAE 220 approach. DOE is proposing to add that the product temperature sensor wiring not affect energy performance, consistent with section 5.4.9 of ASHRAE 72–2018R.

DOE seeks comment on the proposed method to load the prepared standard product pans into the test unit for the blast chillers and blast freezers test procedures.

In the June 2021 RFI, DOE requested comment and supporting data on the typical usage settings for blast chillers and blast freezers and how different set-point modes affect energy performance. 86 FR 31182, 31189. For units with multiple temperature settings within the refrigerator or freezer temperature range, DOE requested comment on which setting is appropriate for testing. *Id.* Additionally, for units with settings that affect the pull-down duration, DOE requested comment on whether the fastest or slowest setting (or any other setting if more than two settings are provided) should be used for testing. *Id.*

NEEA commented that ASHRAE 220 is working to answer some of the questions posed by DOE, including establishing starting food temperatures, blast chiller temperatures, and ambient temperatures. (NEEA, No. 5, p. 3)

ASHRAE 220 specifies instructions to operate the blast chilling or blast freezing cycle. A blast chilling or blast freezing cycle is selected for blast chilling and blast freezing tests, respectively. ASHRAE 220 specifies that the cycle selected should provide the most rapid product cooldown designed for the densest food product as stated in manufacturer literature. ASHRAE 220 provides that a manufacturer may provide additional clarification on cycle selection. ASHRAE 220 specifies that the selected cycle name and settings are recorded.

ASHRAE 220 further specifies the following: Temperature and energy measurement starts once the first pan is loaded in the unit; the selected cycle continues until all individual measured pan temperatures are below the final temperatures of 40 °F and 2 °F for blast chilling and blast freezing tests, respectively; if the selected cycle program terminates prior to all product temperatures reaching below the test's prescribed final temperature, the standard product pans remain in the unit until it does so; if the temperature does not reach below the test's prescribed temperature after two additional hours, unit temperature settings are adjusted to achieve the desired final temperature; temperature and energy measurements end once the door is opened to remove the standard product pans; and energy consumption, temperature, and time is reported starting with the first pan loaded in the unit and ending with the final pan reaching the prescribed final temperature.

Based on DOE's review of ASHRAE 220, DOE has initially determined that additional specifications and certain deviations may be needed to improve test repeatability and reproducibility. Consistent with the integrated average temperature requirements from the current DOE CRE test procedures, DOE proposes that a blast chilling cycle with a target temperature of 38 °F and a blast freezing cycle with a target temperature of 0 °F be selected for blast chilling and blast freezing tests, respectively. Consistent with ASHRAE 220, the cycle selected would be the cycle with the most rapid product temperature pulldown that is designed for the densest food product, as stated in the test unit's manufacturer literature. Ambient conditions and time measurements would be recorded from the pre-cool cycle. Product temperature measurements from the measured standard product pans would be recorded from the 8-hour period of heating prior to being loaded into the test unit to ensure that pull-down performance data is recorded. Voltage, frequency, and energy consumed would start to be recorded as soon as the test unit door is opened to load the standard product pans so that blast chiller and blast freezer tests are started at a consistent point across all tests. Once the test unit door is closed, the blast chilling or blast freezing cycle would be selected and initiated as soon as is practicable. The blast chilling or blast freezing cycle selected would be recorded. The blast chilling or blast freezing test period would continue from the door opening until all individual measured pan temperatures are at or below 40.0 °F or 2.0 °F for blast chiller and blast freezer tests, respectively, regardless of whether the selected cycle program has terminated. If all individual measured pan temperatures do not reach 40.0 °F or 2.0 °F for blast chiller and blast freezer tests, respectively, two hours after the selected cycle program has terminated, the test would be repeated and the target temperature would be lowered by 1 °F until all individual measured pan temperatures are at or below 40.0 °F or 2.0 °F for blast chiller and blast freezer tests, respectively, at the conclusion of the test. The duration of the blast chiller or blast freezer test would be recorded.

DOE seeks comment on the proposed method to conduct the blast chilling or blast freezing test.

Calculations

In response to the June 2021 RFI, the CA IOUs commented that the primary factors for energy use are the weight of the food to be chilled, starting temperature, and ending temperatures of the food; therefore, the CA IOUs suggested that DOE choose an energy use metric based on energy use per weight of food and degrees cooled (*i.e.,* the active pull-down mode). (CA IOUs, No. 10, p. 4)

ASHRAE 220 specifies calculations used to report the energy consumed during the test. The measured energy consumption is divided by the test product capacity in pounds, averaged for 3 repeated tests. DOE proposes to incorporate the ASHRAE 220 approach (and to specify that the measured energy consumption is reported in kilowatt-hours) except that only one test would be needed in order to limit test burden. ASHRAE test standards do not generally provide requirements for multiple tests, as sampling plans are typically established by the rating programs that reference the ASHRAE test standard. However, DOE already provides sampling plans for the determination of CRE represented energy or efficiency values at 10 CFR 429.42(a). Accordingly, DOE has initially determined that the three tests considered for the ASHRAE 220 standard are not necessary for representations, and DOE is not planning to incorporate ASHRAE's method of averaging over three tests.

DOE seeks comment on the proposed method for calculating the reported energy use metric for blast chillers and blast freezers.

4. Chef Bases and Griddle Stands

DOE defines ''chef base or griddle stand'' as CRE that is designed and marketed for the express purpose of having a griddle or other cooking appliance placed on top of it that is capable of reaching temperatures hot enough to cook food. 10 CFR 431.62.

As discussed in the April 2014 Final Rule, the explicit categorization of griddle stands covers equipment that experiences temperatures exceeding 200 °F. 79 FR 22277, 22282. As explained, this was to distinguish between equipment that experience cooking temperatures and equipment that experiences temperatures at which food is kept warm. *Id.* However, DOE notes that the current definition for chef bases and griddle stands does not specify a quantitative temperature and instead states ''hot enough to cook food.''

DOE stated in the April 2014 Final Rule that chef bases and griddle stands are able to be tested according to the DOE test procedure, but that their refrigeration systems require larger compressors to provide more cooling capacity per storage volume than equipment with compressors that are appropriately sized for conventional CRE and more typical room temperature conditions. 79 FR 22277, 22281–22282. However, the definition does not include specifications for the refrigeration systems to differentiate this equipment from typical CRE.

In the June 2021 RFI, DOE requested comment on whether the definition for chef bases and griddle stands should be modified to include a specific temperature requirement for cooking appliances placed on top of chef bases and griddle stands, or other such specification. 86 FR 31182, 31189. DOE requested feedback on quantifiable characteristics of chef bases and griddle stands that differentiate this equipment from other CRE, including information on appropriate temperature ranges and refrigeration system characteristics that could be used to classify equipment as chef bases and griddle stands. *Id.*

In the June 2021 RFI, DOE also requested comment on whether modifications to the current CRE test procedure would be appropriate for testing chef bases and griddle stands to better represent real-world use conditions. *Id.* DOE specifically requested supporting data on the time per day that top-mounted cooking equipment is active, as well as typical temperatures of the cooking equipment when active, to gain an understanding of the magnitude of the resulting thermal loads. *Id.* DOE also requested comment on whether the existing DOE test procedure is appropriate for measuring the energy use of this equipment. *Id.*

True, Hoshizaki, NEEA, and the CA IOUs commented in support of using the ASHRAE 72–2018 test procedure for chef bases and griddle stands to prevent additional burden of a new test procedure. (True, No. 4, p. 15; Hoshizaki, No. 13, p. 3; NEEA, No. 5, p. 2; CA IOUs, No. 10, p. 1–2) The CA IOUs commented that utility programs for this equipment would benefit from uniform test procedures and definitions to document the rated energy performance for both baseline and efficient products. (CA IOUs, No. 10, p. 1–2) NEEA commented in support of collaboration with EPA to ensure market consistency. (NEEA, No. 5, p. 2)

Hoshizaki commented that the ASHRAE 72 committee should be given the chance to review whether a heat load should be added to the top of the units to represent heating equipment (*e.g.,* fryers, griddles, hot pads, *etc.*). (Hoshizaki, No. 13, p. 3) NEEA commented that an ASHRAE investigation added an electric griddle to the top of chef bases to emulate real world conditions; however, that version of ASHRAE 72 was abandoned when there was insufficient variation in the data to demonstrate the effectiveness of thermal breaks between the surface and refrigerated compartments beneath. (NEEA, No. 5, p. 2) The CA IOUs commented that PG&E and Southern California Edison (''SCE'') commissioned and conducted testing including a griddle at 350 °F and a broiler at 600 °F to evaluate heat loads typically found near chef bases and found negligible impact on the daily energy consumption of the chef base.[27] (CA IOUs, No. 10, p. 2) The CA IOUs commented that the six door openings per day in ASHRAE 72–2018 may not be representative of field use and encouraged DOE to work with industry stakeholders to establish a more representative door opening schedule. (CA IOUs, No. 10, p. 2)

The Joint Commenters stated that preliminary EPA research found significant variation in energy performance between preparation tables and work top tables, which have similar designs to chef bases. (Joint Commenters, No. 8, p. 2) NEEA commented that SCE tested six different chef bases using ASHRAE 72–2014 without modification and that results indicated wide variation in energy performance in the market, suggesting chef bases could be tested using ASHRAE 72–2014. (NEEA, No. 5, p. 2)

ITW commented that UL Standard 197, ''Commercial Electric Cooking Appliances'' generally covers the cooking appliances and does not refer to any minimum cooking or appliance surface temperature, such that DOE's definition appears correct. (ITW, No. 2, p. 8)

AHRI commented that chef bases and griddle stands are highly customizable, with the following characteristics that may differ from typical CRE: additional insulation below the high temperature surface, modified temperature operation for easily spoilable product, shortened operating windows for loading only during business hours, drawer configurations, and attributes for the high ambient conditions. (AHRI, No. 3, p. 15) AHRI commented that none of these characteristics are distinguishing features and can be custom built based on the end user's needs. (*Id.*)

True commented that DOE should not regulate food safety and should limit its regulations to energy consumption. (True, No. 4, p. 15) True commented that chef bases and griddle stands are known to operate with higher heat loads due to cook tops, grills, etc. (*Id.*) True commented that their reach-in equipment within the VCS.SC.M/L equipment classes (used to hold frozen fries or refrigerated meat, poultry, or fish) are commonly installed next to fryers and grills in hot kitchens, but that they perform ASHRAE 72–2018 for energy consumption and NSF 7–2019 for food safety and performance testing. (*Id.*)

AHRI commented that the current test procedure does not account for the high ambient conditions, added thermal load from the cook top, or customized operating windows. (AHRI, No. 3, p. 10) AHRI commented that the time per day that top mounted equipment is active varies based on the application (*e.g.,* breakfast diner operating a griddle during breakfast hours only versus a 24-hour diner using the grill continuously). (*Id.*)

The CA IOUs and Joint Commenters commented that DOE should establish higher ambient temperature and relative humidity conditions for evaluating the performance of chef bases. (CA IOUs, No. 10, p. 2–3; Joint Commenters, No. 8, p. 2) The CA IOUs recommended adopting conditions from ASTM F2143–16 or the emerging ASHRAE Standard 220, which have an ambient temperature of 86 °F ± 2 °F and relative humidity of 35 percent ± 5 percent. (CA IOUs, No. 10, p. 2–3) The CA IOUs commented that these elevated kitchen temperatures are supported by a 2012 ASHRAE research project benchmarking the thermal conditions in 100 commercial kitchens in the United States, which found that the average temperature in preparation areas ranged from 72 °F to 79 °F, while the average temperature in cooking areas ranged from 79 °F to 93 °F. (*Id.*) The CA IOUs

[27] *See www.caetrm.com/media/reference-documents/ET15SCE1010_Chef_Bases_Report_final2.pdf.*

commented that a 2014 PG&E study investigated refrigerated prep tables at eleven different sites in California, finding that the ambient temperatures over a two-week period ranged from 70 °F to 78 °F during a cold month in February and between 82 °F and 84 °F during a two-week period during a warmer fall season, and that both studies found consistently elevated ambient temperatures in kitchens compared to the existing 75 °F ambient temperature requirement in ASHRAE 72–2018. (*Id.*)

ITW and True commented that the test procedure should not change and would create an unnecessary burden. (ITW, No. 2, p. 8; True, No. 4, p. 16)

ITW commented that UL 197 Section 50.1.3, ''Normal Temperature Test,'' assumes an ambient temperature of 77 °F, which is within the ASHRAE 72–2018 temperature specification, such that no change is needed. (ITW, No. 2, p. 8) ITW commented that a radiant panel could be added or held above (at a 4 foot to 6 foot clearance) the top surface to simulate a ''worst case'' cooking appliance, but that the panel would need to evenly raise the surface temperature to a maximum of 194 °F (see UL 197, Table 50.1). (*Id.*)

Since publication of the June 2021 RFI, EPA has published a Final Draft Version 5.0 Eligibility Criteria for the ENERGY STAR program for commercial refrigerators and freezers.[28] This final draft specification includes a definition for ''chef base or griddle stand'' consistent with DOE's current definition and would require testing according to the existing DOE test procedure in place for CRE.

DOE has considered whether additional detail regarding the characteristics of chef bases or griddle stands would better differentiate it from other CRE. As discussed, chef bases or griddle stands are designed for use with cooking equipment placed on top of the unit. Typical chef bases or griddle stands may include oversized refrigeration systems and additional cabinet insulation to ensure the unit can maintain cold storage temperatures with the additional heat load from the cooking equipment. However, these characteristics may not be readily identifiable in a given chef base or griddle stand. For example, manufacturers may not offer CRE in the a different CRE equipment class with similar designs to any chef base or griddle stand, in which case there would not be a point of comparison available to determine whether the chef base or griddle stand includes more insulation or an oversized refrigeration system.

While EPA's Final Draft Version 5.0 Eligibility Criteria includes a definition of chef base or griddle stand consistent with DOE's definition, it also includes definitions for similar equipment types; *i.e.,* worktop and undercounter[29] CRE. Both of these definitions include a minimum height requirement of 32 inches. Chef bases or griddle stands have similar construction to worktop and undercounter equipment but are typically shorter to allow for installing cooking equipment above the refrigerated cabinet at a normal working height. Consistent with the ENERGY STAR definitions for worktop and undercounter, DOE is proposing to amend the definition for chef base or griddle stand to specify that the equipment has a maximum height of 32 inches, including any legs or casters.

DOE requests comment on the proposed amendment to the definition for chef base or griddle stand, which specifies a maximum height of 32 inches for this equipment. DOE requests information on any other identifiable equipment characteristics that may differentiate chef bases and griddle stands from other similar CRE.

Regarding testing for chef bases or griddle stands, DOE has initially determined that the existing DOE test procedure provides an appropriate basis for measuring the energy consumption of this equipment. DOE recognizes that chef bases or griddle stands can be installed and used in ambient environments that are different from other CRE, but DOE proposes to test this equipment in the same conditions because DOE has tentatively determined that the additional heat loads of cooking equipment do not affect measured energy use. Additionally, this proposal would maintain a consistent testing basis for similar equipment. Specifically, testing chef bases or griddle stands according to the same test procedure as other CRE would allow end users to compare energy consumptions among chef bases or griddle stands and other currently covered equipment.

Additionally, DOE conducted testing similar to the PG&E and SCE testing to investigate whether cooking equipment operation would impact chef base or griddle stand energy use during typical operation, as illustrated in Table III.4. DOE tested chef base or griddle stand refrigerators and freezers to the current DOE CRE test procedure with and without an active griddle installed on top of the test unit. During the tests with an active griddle installed, the griddle was turned on three hours after the start of the defrost period and maintained a target griddle surface temperature of 185 °F for 8 hours, concurrent with the door opening period. After the 8-hour period of griddle operation, the griddle was turned off for the remainder of the test.

TABLE III.4—CHEF BASE OR GRIDDLE STAND ENERGY CONSUMPTION COMPARISON WITH AND WITHOUT AN ACTIVE GRIDDLE

Test unit	Refrigerated volume (ft^3)	Energy consumption with griddle installed (kWh/day)	Energy consumption without griddle installed (kWh/day) (percent)	Energy consumption difference
Refrigerator #1	5.21	0.97	0.96	−0.5
Refrigerator #2	9.17	1.04	1.03	−0.5
Refrigerator #3	9.72	1.59	1.58	−0.1
Freezer #1	6.56	7.28	7.29	+0.2

[28] For information on the Version 5.0 specification development, see *www.energystar.gov/products/spec/commercial_refrigerators_and_freezers_specification_version_5_0_pd.*

[29] Undercounter: A vertical closed commercial refrigerator or freezer that has no surface intended for food preparation. The equipment is intended for installation under a separate counter or workspace. This equipment may have doors or drawers and shall have a minimum height of 32-inches, including legs or casters.

Worktop: A vertical closed commercial refrigerator or freezer that has a surface intended for food preparation that is incapable of supporting cooking equipment. This equipment may have doors or drawers and shall have a minimum height of 32-inches, including legs or casters.

TABLE III.4—CHEF BASE OR GRIDDLE STAND ENERGY CONSUMPTION COMPARISON WITH AND WITHOUT AN ACTIVE GRIDDLE—Continued

Test unit	Refrigerated volume (ft^3)	Energy consumption with griddle installed (kWh/day)	Energy consumption without griddle installed (kWh/day) (percent)	Energy consumption difference
Freezer #2	11.31	8.58	8.70	+1.4

* DOE tested an additional freezer that is not shown in the table due to inconsistent issues with the evaporator icing during testing.

Consistent with the findings in the PG&E and SCE report, DOE observed that chef bases or griddle stands consumed similar amounts of energy with and without cooking equipment operating above the unit. DOE has been unable to determine why Freezer #2 consumed slightly more energy without a griddle installed. For these reasons, DOE is proposing to maintain the existing CRE test procedure for testing chef bases or griddle stands (with the additional proposals as discussed in this NOPR). DOE has tentatively determined that this approach would allow for measuring energy consumption representative of typical use, provide a consistent basis for comparing energy consumption across similar equipment types, and would limit test burden.

DOE requests comment on its proposal to test chef bases and griddle stands according to the test procedure used for other CRE.

5. Mobile Refrigerated Cabinets

DOE does not currently define or specify test procedure provisions specific to other categories of refrigerated holding and serving equipment, such as certain mobile refrigerated cabinets. Specifically, mobile refrigerated cabinets chill the refrigerated compartment before being unplugged from power and taken to a remote location to hold food products while maintaining cooling. Such equipment meets the definition of CRE as defined at 10 CFR 431.62; however, unlike typical CRE, mobile refrigerated cabinets are not continuously connected to a power supply. As discussed in the April 2014 Final Rule, DOE determined that such other categories of refrigerated holding and serving equipment meet the definition of CRE and could be subject to future test procedures and energy conservation standards. 79 FR 22277, 22281. To better distinguish mobile refrigerated cabinets from other defined categories of CRE, DOE is considering developing a definition for this equipment.

In the June 2021 RFI, DOE sought information on the design features and operating characteristics of mobile refrigerated cabinets that would differentiate this equipment from other CRE or buffet tables and preparation tables. 86 FR 31182, 31189. DOE also requested comment on appropriate test conditions (*e.g.,* temperature, moisture content) and conduct (*e.g.,* stabilization, door openings, duration connected and disconnected from power supply) for such equipment. 86 FR 31182, 31189–31190.

AHRI requested further clarification on what DOE considers to be a mobile refrigerated cabinet, stating that it is unclear how this product category differs from the others discussed in the previous rulemaking and the June 2021 RFI. (AHRI, No. 3, p. 11) The Joint Commenters commented that mobile refrigeration cabinets are often placed outdoors and often exposed to higher ambient temperatures than other CRE. (Joint Commenters, No. 8, p. 2)

The CA IOUs commented that these products should be referred to as ''refrigerated storage lockers'' and supported a method of test using a modified version of ASHRAE 72–2018. (CA IOUs, No. 10, p. 6–7) The CA IOUs commented that several petitions for test procedure waivers have been submitted by manufactures. The CA IOUs supported the door opening methodology granted in those waivers, asserting that an 8-second door opening cycle once every 2 hours for 10 hours seems more representative of real-world operation than door opening cycles once every 10 minutes for eight hours, as specified in ASHRAE 72–2018). (*Id.*)

The focus of the request for information regarding mobile cabinets was CRE that that typically operate without a continuous connection to a power supply. Examples of this equipment include refrigerated cabinets used to hold cold merchandise for vending outdoors during the day without connection to a power supply while outdoors, or storage cabinets to hold food at temperature while being delivered for service (*e.g.,* delivered to hospital rooms).

The CA IOUs' comment in response to the June 2021 RFI appears to refer to customer order storage cabinets, discussed further in section III.C.5 of this NOPR, and not mobile refrigerated cabinets. It is not clear whether the Joint Commenters also intended to refer to customer order storage cabinets or mobile refrigerated cabinets. DOE recognizes that mobile refrigerated cabinets can be used outdoors, as in the case of vending refrigerated merchandise, but are often used indoors, as in the case of refrigerated storage for food service.

Based on a review of mobile refrigerated cabinets available on the market, the operation and use of this equipment is subject to varied end-use applications, which may be specific to individual models. DOE did not identify data or information that would inform development of representative test conditions for such equipment. As such, DOE is not proposing to establish test procedures for mobile refrigerated cabinets in this NOPR.

To better distinguish mobile refrigerated cabinets from other defined categories of CRE, DOE proposes to add the following definition to 10 CFR 431.62 for mobile refrigerated cabinets:

A ''mobile refrigerated cabinet'' means commercial refrigeration equipment that is designed and marketed to operate only without a continuous power supply.

CRE that allow the user to choose whether to operate with or without a continuous power supply do not meet the definition of a mobile refrigerated cabinet.

Although DOE is not proposing to establish test procedure provisions specific to mobile refrigerated cabinets, CRE that do not meet the definition of a mobile refrigerated cabinet are subject to DOE's test procedure at appendix B and energy conservation standards under the applicable CRE equipment class.

DOE requests comment on the proposed definition for mobile refrigerated cabinet. DOE also requests comment on the proposal to not

establish test procedures for mobile refrigerated cabinets.

6. Additional Covered Equipment

In the June 2021 RFI, DOE requested feedback on other CRE that may be available on the market and that may warrant separate equipment category definitions and test procedures. 86 FR 31182, 31190. Specifically, DOE sought information on the relevant equipment features and utilities that would require separate equipment categories, as well as the impact of those features and utilities on energy use and whether the current test procedure would provide results of those impacts. *Id.* DOE also requested any available information on potential definitions, test procedures, and usage data (specifically, how the typical daily energy use of the unique design compares to energy use of a unit of the most similar CRE equipment class) for these equipment categories. *Id.* DOE also requested comment on whether it should establish a definition for ''other refrigerated holding and serving equipment'' to clearly delineate equipment not currently subject to DOE's test procedure. *Id.* DOE sought feedback on an appropriate definition, and on the types of equipment it should cover. *Id.*

AHRI commented that there is not a need for additional equipment classes at this time. (AHRI, No. 3, p. 11)

AHRI and Hussmann commented that creating additional definitions for niche models not currently subject to the DOE test procedure would create confusion in the regulated community that outweighs any potential benefits. (AHRI, No. 3, p. 11–12; Hussmann, No. 14, p. 12) AHRI and Hussmann commented that models outside the scope or unable to achieve the efficiency standards should use the test procedure waiver process, asserting that there will always be gaps between covered equipment and the list of ''other refrigerated holding and serving equipment.'' (AHRI, No. 3, p. 11–12; Hussmann, No. 14, p. 12) True commented that the existing test procedure should be used for these additional equipment categories. (True, No. 4, p. 17)

AHRI and Hussmann commented that any alternate testing should be handled through waiver requests or specific supplemental instructions on a case-by-case basis. (AHRI, No. 3, p. 12; Hussmann, No. 14, p. 13)

DOE provided examples of potential CRE that may require additional test procedure provisions in the June 2021 RFI. 86 FR 31182, 31190. DOE has initially determined that additional test procedure provisions to account for what is likely unique equipment operation or usage are not needed at this time. The existing DOE test procedure is reasonably designed to produce test results which reflect energy efficiency and energy use of the CRE subject to the test procedure during a representative average use cycle, and is not be unduly burdensome to conduct. In that the test procedure provides a representative average use cycle, DOE is unable to account for every combination of operating conditions and usage without the resulting test procedures being unduly burdensome. If the test procedure cannot be conducted for certain equipment, or if the test procedure results in measures of energy consumption so unrepresentative of the equipment's true energy consumption characteristics as to provide materially inaccurate comparative data, manufacturers may petition DOE for a test procedure waiver under the provisions of 10 CFR 431.401. Section III.I of this NOPR discusses waivers currently in place for CRE, including for equipment with typical usage patterns different from the current test procedure approach.

D. Harmonization of Efficiency Standards and Testing With NSF 7–2019 Food Safety

NSF 7–2019 establishes minimum food protection and sanitation specifications for the materials, design, manufacture, and performance of commercial refrigerators and freezers and their related components. Section 2.3 of appendix B in the CRE test procedure provides that for CRE that is also tested in accordance with NSF test procedures (Type I and Type II),[30] integrated average temperatures and ambient conditions used for NSF testing may be used in place of the DOE-prescribed integrated average temperatures and ambient conditions provided they result in a more stringent test. To that end, the ambient temperature may be higher, but not lower than the DOE test condition; and the IAT may be lower, but not higher, than that measured at the DOE ambient test condition. *Id.* The test conditions, and possible different thermostat settings, under NSF 7–2019 may result in measured energy use that is more representative of average use in applications for which users prioritize food safety over energy efficiency. Permitting the use of the NSF 7–2019 test conditions may also reduce testing burden for manufacturers.

In the June 2021 RFI, DOE requested comment on ways in which the DOE test procedure may be modified to better harmonize with NSF 7–2019, if appropriate. 86 FR 31182, 31190. DOE specifically requested comment on potential test requirements related to food safety that could be specified to ensure that equipment is tested as it would operate in the field. *Id.*

ITW, AHRI, Arneg, and True commented that the DOE test procedure is appropriate and that test procedures changes are not needed to harmonize with NSF 7–2019. (ITW, No. 2, p. 9; AHRI, No. 3, p. 12; Arneg, No. 12, p. 2; True, No. 4, p. 18) ITW commented that the typical restaurant, kitchen, and dining area all have air conditioning set to temperatures lower than those specified in the ASHRAE 72–2018 standard, and that DOE should make no changes or introduce any new environmental conditions. (ITW, No. 2, p. 9) AHRI commented that NSF 7–2019 applies only to self-contained medium temperature units. (AHRI, No. 3, p. 12)

Hussmann commented that rather than referring to NSF 7–2019 (which only applies to SC.M units), Hussmann would support DOE standardizing testing for energy efficiency using product temperatures that better resemble the temperatures that a display case must run to preserve perishable food product for all equipment classes. (Hussmann, No. 14, p. 13–14)

DOE is not proposing any additional amendments to the test procedures to further reference or harmonize with NSF 7–2019 testing. The existing test procedure instructions in section 2.3 of appendix B allow for the use of NSF 7–2019 test data, subject to certain requirements, to be used for DOE testing. DOE recognizes that NSF 7–2019 testing is not applicable or appropriate for all equipment types. For those equipment types, the DOE test procedure provides the required test instructions, including additional IAT rating temperatures, and reference to NSF 7–2019 is not needed. DOE maintains that the DOE test procedure (and proposed in this NOPR), by reference to AHRI 1200–202X and ASHRAE 72–2018R for conventional CRE, provides a measure of energy use of CRE during a representative average use cycle and is not unduly burdensome to conduct. The optional NSF 7–2019 test provides a means to further reduce test burden in certain instances, but it not required for DOE testing.

E. Dedicated Remote Condensing Units

DOE is aware of remote condensing CRE models for which specific dedicated condensing units are

[30] Type I equipment is designed to operate in 75 °F ambient conditions and Type II equipment is designed to operate in 80 °F ambient conditions.

intended for use with specific refrigerated cases. For certain of these models, the remote condensing units are intended to be installed on or near the refrigerated case within the same conditioned space. For other models, the remote condensing units are intended to be installed outdoors, but the refrigerated case is intended to be used specifically with the designated remote condensing unit.

For this equipment, the combined refrigerated case and condensing unit refrigeration system would effectively operate as if it were a CRE with a self-contained condensing unit. Under the current DOE test procedure, remote CRE energy consumption is determined from the energy use of components in the refrigerated case plus a calculated compressor energy consumption based on the enthalpy change of refrigerant supplied to the case at specified conditions. The compressor energy use calculation is based on typical reciprocating compressor energy efficiency ratios (''EERs'') at a range of operating conditions. *See* Table 1 in AHRI 1200–2010. For CRE used with dedicated condensing units, the actual compressor used during normal operation is known (*i.e.,* the compressor in the dedicated condensing unit). Accordingly, testing the whole system using the same approach as required for a self-contained CRE may produce energy use results that are more representative of how this equipment actually operates in the field. Additionally, testing such a system as a complete system rather than using the test procedures for remote condensing units may be less burdensome because it would not require use of a test facility capable of maintaining the required liquid and suction line refrigerant conditions as currently required for testing remote CRE (*i.e.,* the refrigerant conditions consistent with the ASHRAE 72–2005 requirements and at the conditions necessary to maintain the appropriate case temperature for testing).

In the June 2021 RFI, DOE sought feedback on whether CRE with dedicated remote condensing units should be tested to evaluate the performance of the paired condensing unit and refrigerated case, rather than assuming a condensing unit EER as specified in the AHRI 1200 standards. 86 FR 31182, 31191. DOE also requested information on how to identify whether testing with a dedicated remote condensing unit is appropriate for a particular system (rather than the typical remote CRE testing under the existing approach). *Id.*

ITW commented that testing the paired condensing unit and refrigerated case is an excellent option or alternative. (ITW, No. 2, p. 9)

Arneg commented that display case manufacturers are not necessarily the same as the condensing unit manufacturers, and that condensing units and refrigerated cases are installed by a third party and there is no control over the installation, such that evaluating the performance of the paired unit would not be practical. (Arneg, No. 12, p. 2) Arneg commented that dedicated condensing units are selected based on the product temperature requirements, ambient temperature, elevation, and the distance between the display case and condensing unit. (Arneg, No. 12, p. 2)

AHRI and Hussmann commented that the use of refrigeration racks and condensing units are determined by application specific factors, and that there are no significant model characteristics that differentiate between whether the system should be used with a rack condensing system or a dedicated remote condensing unit. (AHRI, No. 3, p. 13; Hussmann, No. 14, p. 14) AHRI and Hussmann commented that most remote units are designed to accommodate either a condenser rack or dedicated condensing unit because units are dependent on user constraints, and manufacturers are not involved in the discussion (*i.e.,* distributors typically work with customers). (*Id.*) AHRI and Hussmann commented that multiple cases can often use a single condensing unit. (*Id.*)

AHRI and Hussmann requested further clarification from DOE on when a condensing unit would be considered specifically dedicated in order to further evaluate if there are unique situations where the outlined approach should be considered. (AHRI, No. 3, p. 13; Hussmann, No. 14, p. 14) AHRI and Hussmann do not believe the term ''dedicated remote condensing unit'' is applicable. (*Id.*)

The Joint Commenters stated that if DOE pursued the approach of testing complete systems only when a complete system is specified by the manufacturer, it could potentially create market distortions (*e.g.* a manufacturer of a display case who currently specifies a specific dedicated remote condensing unit may choose to discontinue that practice, depending on the implications for their equipment). (*Id.*)

NEEA commented that CRE models exist connected to remote multi-compressor rack systems and remote dedicated condensing units, and recommended that DOE test CRE with dedicated remote condensing units as self-contained units to enhance the representativeness of testing. (NEEA, No. 5, p. 6) NEEA commented that testing, instead of using the AHRI 1200–2013 EER table, would encourage increased efficiency of the entire unit and not default to assumptions about the remote equipment. (NEEA, No. 5, p. 6) NEEA commented that units designed and sold with a dedicated remote condensing unit may already experience increased test burden due to required changes at the testing facility to accommodate that CRE. (*Id.*) NEEA commented that in these instances, testing remote CRE with a dedicated condensing unit would be more representative of daily energy consumption, less burdensome to test, and increase the scope of products subject to efficiency standards. (*Id.*)

The CA IOUs commented in support of testing CRE dedicated remote condensing units together as a matched pair, asserting that it would be more representative of actual energy use as well as being comparable to self-contained units. (CA IOUs, No. 10, p. 7–8)

AHRI and Hussmann commented that they do not believe that strictly ''dedicated'' condensing units are applicable. (AHRI, No. 3, p. 13; Hussmann, No. 14, p. 15) AHRI and Hussmann commented that remote cases are already held to energy requirements and are paired with condensing units based on end-user requirements. (AHRI, No. 3, p. 13; Hussmann, No. 14, p. 15)

Arneg commented that the role of an application engineer is to do the performance comparison and make a professional judgement for the most practical solution, such that there is no need for standards for this process. (Arneg, No. 12, p. 2)

AHRI and Hussmann commented that dedicated remote condensing units should be further discussed at the industry test standard level. (AHRI, No. 3, p. 13–14; Hussmann, No. 14, p. 15) AHRI and Hussmann commented that some units may be designed as packaged pairs, when installation conditions differ, but that an end user may choose only one side of the system to pair with another manufacturer's condensing unit. (AHRI, No. 3, p. 13–14; Hussmann, No. 14, p. 15)

Through participation in the industry test standard committees to consider updates to AHRI 1200 and ASHRAE 72, DOE understands that remote CRE are most commonly installed with rack condensing systems and that installations with dedicated condensing units represent a very small portion of the remote CRE market. Additionally,

DOE has not identified a method to determine whether a remote CRE unit would be installed with a dedicated condensing unit rather than a rack condensing system. DOE is not aware of any remote CRE that are capable of installations only with a dedicated remote condensing unit (*i.e.,* DOE expects that all remote CRE may be installed with rack condensing systems).

DOE has tentatively determined that an amended test procedure to account for remote CRE installed with dedicated remote condensing units is not appropriate. While remote CRE can be installed with dedicated remote condensing units, the existing test procedure is representative of the most common installations (*i.e.,* installations with a rack condensing system) for remote CRE and therefore measures the energy use of this equipment during a representative average use cycle. Additionally, DOE has not identified any remote CRE capable of use only with dedicated remote condensing units, and therefore has tentatively determined that the existing test procedure is applicable to all remote CRE.

For remote CRE that can be installed with dedicated condensing units, manufacturers do not always specify dedicated remote condensing units to match with the remote cabinet. Having performance information for both the refrigerated cases and separate dedicated remote condensing units would allow users to compare the performance of both parts of the system when matched.

In the June 2021 RFI, DOE requested comment on whether, and if so how, users of CRE consider the energy performance of the system in instances in which a specific dedicated remote condensing unit is not identified for a refrigerated case. 86 FR 31182, 31191. DOE also requested comment on potential approaches to evaluate the energy performance of dedicated remote condensing units independent of their use with specific refrigerated cases. *Id.*

Arneg commented that every condensing unit would have a specific EER based on design condition. (Arneg, No. 12, p. 2) AHRI and Hussmann commented that appropriate EER values can be obtained from the condensing unit manufacturer if the matched pair needs to be calculated separately from the specified condensing unit. (AHRI, No. 3, p. 13–14; Hussmann, No. 14, p. 15)

The Joint Commenters stated that manufacturers often do not specify a specific dedicated remote condensing unit for use with a specific refrigerated case and that it would be preferable to develop an approach to allow for independently measuring the performance of all dedicated remote condensing units, regardless of how they are sold. (Joint Commenters, No. 8, p. 3) The Joint Commenters stated that DOE should consider an approach for treating dedicated remote condensing units similar to the approach for walk-in coolers and freezers, which allows for rating both a matched pair (*i.e.,* unit cooler and dedicated remote condensing unit) and either a unit cooler or a dedicated remote condensing unit by itself (with assumptions for the performance of the other piece of equipment). (*Id.*) The Joint Commenters stated that this approach could be applied to CRE to allow for rating both a complete system (*e.g.,* display case and dedicated remote condensing unit) and either a display case or dedicated remote condensing unit by itself. (*Id.*)

The CA IOUs commented that DOE should consider using a test methodology similar to AHRI Standard 1250–2020 to serve as the starting point for developing a test method for dedicated remote condensing units, and specifically that the ''Room Calorimeter Method'' in AHRI 1250 could serve as a starting point with representative outdoor temperatures of 35 °F, 59 °F, and 95 °F. (*Id.*)

DOE is not aware of dedicated condensing units that are intended for use only with CRE. Many of the dedicated condensing units available for use with remote CRE are also used with other equipment and subject to DOE testing and energy conservation standards, such as walk-in coolers and walk-in freezers and automatic commercial ice makers. Because of the relatively small portion of the remote CRE market that is installed connected to a dedicated remote condensing unit, the applicability of other DOE test procedures and energy conservation standards to condensing units that may be used with CRE, and because DOE is not aware of any dedicated condensing units intended for use specifically with CRE, DOE is not proposing definitions or test procedures that would directly assess performance of CRE dedicated condensing units.

In summary, DOE is not proposing to amend the existing approach for testing remote CRE, which represents the performance of remote CRE as installed with a remote compressor rack condensing system.

DOE requests comment on its tentative determination to not propose amended test procedures for dedicated remote condensing units.

F. Test Procedure Clarifications and Modifications

1. Defrost Cycles

The test period requirements in ASHRAE 72–2005, incorporated by reference in the current CRE test procedure, and in ASHRAE 72–2018 require a 24-hour test period, which begins with a defrost after steady-state conditions are achieved.[31] Use of a fixed 24-hour test period can provide for a degree of variability in the measured energy consumption, depending on when additional defrost cycles occur after the initial defrost cycle. (*e.g.,* the test period may capture only a portion of a defrost cycle at the end of the test period rather than a complete number of defrost cycles). Typically, if multiple complete defrost cycles occur within the 24-hour period, the impact of capturing partial defrost cycles would be small. Similarly, if the defrost cycle duration is slightly greater than 24-hours, the impact of capturing a partial defrost cycle would be small. However, the impact may be more substantial if the defrost cycle duration is very long (*i.e.,* multiple days between defrost) or if the defrost cycle is slightly less than 24 hours (*i.e.,* the test period would capture two defrost occurrences but only one period of ''normal'' operation between defrosts). DOE also notes that ASHRAE 72–2005 does not have any specific provisions for CRE with variable defrost control schemes (*i.e.,* defrosts that may be triggered based on conditions or other parameters rather than only a timer) and does not account for CRE with no automatic defrost (*i.e.,* manual defrost).

DOE has addressed similar issues in the test procedures for consumer refrigeration products. The test procedures for those products apply a two-part test period (one period for steady-state operation and one period to capture events related to the defrost cycle) to account for defrost energy consumption for products with long defrost cycle durations or with variable defrost control. The energy use calculations then weight the performance from each test period based on the known compressor runtime between defrosts or based on a calculated average time between defrosts in field operation that is based on the control parameters for variable defrosts. *See* appendices A and B to subpart B of 10 CFR part 430.

[31] ASHRAE 72–2005 and ASHRAE 72–2018 define steady state as the condition in which the average temperature of all test simulators changes less than 0.4 °F from one 24-hour period or refrigeration cycle to the next.

Additionally, DOE has addressed testing of certain CRE models that do not have automatic defrost in a waiver granted to AHT published on October 30, 2018. 83 FR 54581 (''October 2018 Waiver''). For the basic models subject to the waiver, the test period begins after steady state conditions occur (instead of beginning with a defrost cycle) and the door-opening period begins 3 hours after the start of the test (instead of 3 hours after a defrost cycle). 83 FR 54581, 54583. DOE also granted AHT an interim waiver for testing certain models with defrost cycles longer than 24 hours. 82 FR 24330 (May 26, 2017; ''May 2017 Interim Waiver'').[32] The interim waiver required that AHT test the specified models using a two-part test method similar to the method for consumer refrigerators, with the first part capturing normal compressor operation between defrosts, including an 8-hour period of door openings, and the second part capturing all operation associated with a defrost, including any pre-cooling or temperature recovery following the defrost. 82 FR 24330, 24332–24333.

In the June 2021 RFI, DOE requested comment on the impact of the potential defrost cycle variability and whether the test period should be revised to minimize the effects of defrost cycle duration for certain equipment. 86 FR 31182, 31191. DOE additionally requested comment and supporting data on how incorporating a two-part test procedure may impact measured energy consumption, test burden, and repeatability and reproducibility. *Id.* Additionally, DOE requested information on the availability of equipment with variable defrost control and the control schemes employed in those models, if any are available. *Id.* DOE requested comment on whether the approach granted to AHT in the May 2017 Interim Waiver may better measure the representative energy use of CRE over complete defrost cycles compared to the current 24-hour test period. *Id.*

AHRI and Hussmann commented that the ASHRAE SSPC 72 committee has discussed defrost cycles and is considering changes to the test procedure to address variability in future revisions, and suggested that DOE bring this topic to the industry test standard discussions for further considerations. (AHRI, No. 3, p. 14; Hussmann, No. 14, p. 16)

True and ITW commented in support of the current DOE test procedure length of 24 hours, which they stated captures the defrosts by starting the test at the beginning of a defrost cycle such that all energy evaluations experience at least one defrost cycle. (True, No. 4, p. 20; ITW, No. 2, p. 10) ITW commented that if DOE finds it necessary to restructure the test procedure, the evaluation period should be increased in steps of 24 hours, with the 8-hour door opening cycle repeating during each 24 hour period, to dilute any concerns of defrost variability and maintain a constant load per 24 hour period. (ITW, No. 2, p. 10)

The CA IOUs commented that defrost energy can represent a significant contribution to energy use of CRE and that equipment with frost build up on their refrigeration coils suffer from reduced efficiency compared to a clean coil. (CA IOUs, No. 8, p. 9)

For testing CRE with no automatic defrost, ASHRAE 72–2018R incorporates instructions for starting the test period and door openings that are consistent with those provided in the October 2018 Waiver (*i.e.,* the instructions do not require a defrost occurrence). Therefore, DOE's proposal to incorporate by reference ASHRAE 72–2018R would address this test issue.

For testing CRE with variable defrost, DOE has tentatively determined that the existing 24-hour test period represents typical operation during a day, including a period of door openings and a period of closed-door operation, and is not proposing any additional test requirements in this NOPR. Units with variable defrost controls may initiate more frequent defrosts in response to door openings, which is captured by the current test procedure.

The 24-hour test period specified in ASHRAE 72–2018 provides a representative basis for measuring energy consumption of most CRE, capturing the defrost occurrences and door opening periods expected for a 24-hour period. Most CRE include multiple defrosts during a 24-hour test period, and any incomplete defrost cycle captured in the test period does not significantly impact measured energy consumption. DOE is not proposing to amend the 24-hour test to require that the test procedure capture complete defrost cycles in situations where the defrost interval is less than 24 hours.

DOE has tentatively determined that for CRE with defrost cycles longer than 24 hours, the 24-hour test period would overestimate the actual average defrost energy contribution during a day. Therefore, DOE is proposing to allow the use of a two-part test for CRE with defrost cycles longer than 24 hours. DOE is proposing the two-part test approach, consistent with the approach in the May 2017 Interim Waiver, for such equipment—rather than extending the existing test period in 24-hour increments—in order to limit test burden. For the basic models addressed in the May 2017 Interim Waiver, testing in 24-hour increments would require three 24-hour periods (*e.g.,* the duration between defrosts is 3.5 days, and introducing a fourth 24-hour period would result in the test period capturing two defrosts). Additionally, the 24-hour increment approach would continue to overestimate energy consumption associated with defrosts, albeit to a lesser extent, for defrost intervals that are not exact multiples of 24 hours (as is the case with the basic models covered by the May 2017 Interim Waiver). The two-part test approach eliminates the need for multiple door opening periods and may allow for much shorter overall test durations while accounting for defrost occurrences based on actual defrost interval durations.

Also consistent with the May 2017 Interim Waiver, DOE is proposing that the two-part test would be optional because it would increase test duration compared to the existing approach (by requiring both a 24-hour test plus a defrost test), and manufacturers may determine that the existing test procedure may be more appropriate their models, even if the models incorporate defrost intervals longer than 24 hours.

Specifically, DOE is proposing to allow for testing equipment with defrost intervals greater than 24 hours using a two-part test in which the first part is a 24-hour period of stable operation, including door openings as specified in ASHRAE 72–2018R, but without any defrost operation. Stability for the first part of the test would be determined according to Section 7.5 in ASHRAE 72–2018R, by comparing temperatures determined during Test A and Test B (and a defrost may occur during the test alignment period, as defined in Section 7.4 of ASHRAE 72–2018R, between Test A and Test B). The second part of the test would capture a defrost cycle, including any pre-cooling and temperature recovery associated with a defrost. Rather than referencing the consumer refrigeration product test procedures (as done in the May 2017 Interim Waiver approach), DOE is proposing to require that the start and end of the test period be determined as the last time before and first time after a defrost occurrence, when the measured average simulator temperature (*i.e.,* the instantaneous average of all test simulator temperature measurements) is within 0.5 °F of the IAT as measured

[32] On June 2, 2021, AHT sent a letter to DOE requesting that this interim waiver be withdrawn. See *www.regulations.gov/document/EERE-2017-BT-WAV-0027-0015.*

during the first part of the test. This would ensure that the defrost part of the test captures any pre-cooling operation and temperature recovery following a defrost while limiting the overall duration of the second part of the test.

The May 2017 Interim Waiver includes certain parameters specific to the models covered by the waiver, namely the duration between defrosts. DOE granted the interim waiver based on the minimum defrost interval possible for the equipment; *i.e.,* 3.5 days. To generalize the May 2017 Interim Waiver approach for other CRE models, DOE is proposing that the two-part calculation be applied based on the minimum duration between defrosts permitted by the unit's controls as shown in the following equation.

$$DEC = ET1 \times \frac{(1{,}440 - t_{NDI})}{1{,}440} + \frac{ET2}{t_{DC}}$$

$$t_{NDI} = \frac{t_{DI}}{t_{DC}}$$

Where DEC is the daily energy consumption in kWh/day; ET1 is the energy consumed during the first part of the test, in kWh/day; ET2 is the energy consumed during the second part of the test, in kWh; t_{NDI} is the normalized length of defrosting time per day, in minutes; t_{DI} is the length of time of the defrosting test period, in minutes; t_{DC} is the minimum time between defrost occurrences, in days; and 1,440 is a conversion factor, in minutes per day.

DOE recognizes that the two-part test approach could result in slightly less door-opening energy contribution as the first part of the test, with no defrost and 8 hours of door openings, would be combined with the defrost portion of the test by a calculation. To investigate this impact, DOE conducted testing on equipment with defrost intervals longer than 24 hours and compared results of the existing test procedure (24-hour test period, starting with a defrost), the May 2017 Interim Waiver approach (two-part test, as proposed in this NOPR), and a full-duration approach (multiple 24-hour periods, each with door opening periods, through a complete defrost cycle) as illustrated in Table III.5.

TABLE III.5—THE MAY 2017 INTERIM WAIVER APPROACH INVESTIGATIVE TESTING

HCT.SC.I	Total display area (ft²)	Current DOE CRE test procedure (kWh/day)	May 2017 interim waiver approach (kWh/day)	Full defrost cycle duration approach (kWh/day)
Unit #1	12.72	7.12	6.66	6.66
Unit #2	14.84	6.12	5.61	5.62

DOE's testing showed that the two-part waiver test approach provides an accurate representation of energy consumption when measured over a full defrost cycle (and therefore representative of average use). Additionally, the testing showed that the existing test procedure approach can overestimate measured energy use for CRE with defrost cycles longer than 24 hours.

Based on DOE's investigative testing, DOE has tentatively determined that the May 2017 Interim Waiver approach, and the approach proposed in this NOPR, is representative of a full defrost cycle duration approach for equipment with defrost intervals greater than 24 hours.

With regard to CRE models with multiple evaporators (and therefore, potentially multiple defrosts) connected to a single or multi-stage condensing unit, ASHRAE 72–2005 does not specify which evaporator should be used to determine the defrost cycle that initiates the test. Additionally, if the defrost cycles for multiple evaporators do not activate at the same time during the test, ASHRAE 72–2005 does not specify which defrost cycle should be used to determine the start of the 24-hour test period. ASHRAE 72–2005 also does not explicitly address the treatment of defrost cycles for multi-compartment CRE models (*i.e.,* hybrid CRE) with different evaporator temperatures and defrost sequences.

In the June 2021 RFI, DOE requested information regarding the types of defrost systems that exist in CRE available on the market and how manufacturers currently select test periods for models with multiple evaporators with non-synchronous defrost cycles. 86 FR 31182, 31192. DOE requested comment on any potential modifications that could be made to the CRE test procedure in order to increase representativeness and provide additional detail for testing these units, including whether the two-part approach, as described earlier in this section, would be appropriate. *Id.*

AHRI and Hussmann commented that self-contained units with differing defrost systems would have no impact on the measured energy use. (AHRI, No. 3, p. 14; Hussmann, No. 14, p. 16) AHRI and Hussmann commented that remote hybrid systems, for which there could be a self-service case and a storage/service area with differing defrost systems, the two defrost systems would be tested to the current test procedure individually and would be required to meet the current DOE energy consumption requirements. (*Id.*) ITW commented the ASHRAE 72–2018 evaluation for hybrid equipment should start with the defrost cycle of the storage compartment experiencing the greatest time interval between defrosts. (ITW, No. 2, p. 10)

ITW commented that some controls may be able to interlock the initial defrost at the start of the energy evaluation with subsequent defrost

cycles occurring at intervals determined by the control's operation strategy. (ITW, No. 2, p. 10) ITW suggested increasing the evaluation period from 24 to 48 hours (or longer) but keeping the evaluation process simple to eliminate errors and confusion. (*Id.*) AHRI and Hussmann commented that modifications are not necessary for this situation. (AHRI, No. 3, p. 14; Hussmann, No. 14, p. 16)

AHRI and Hussmann commented that if further clarification is needed, the discussion should be taken to the ASHRAE SSPC 72 committee. (AHRI, No. 3, p. 14; Hussmann, No. 14, p. 16)

As discussed earlier in this section, CRE with automatic defrost typically include multiple defrost occurrences per day. DOE expects that any multi-evaporator CRE with multiple unique defrost cycle durations would similarly defrost multiple times per day, and therefore no change to the existing test procedure is necessary. However, to ensure that the 24-hour test period captures a representative number of defrosts for each evaporator's defrost, DOE is proposing to specify that for CRE with multiple unique defrost intervals for multiple evaporators, the test period as specified in ASHRAE 72–2018R would start with a defrost occurrence for the evaporator defrost having the longest interval between defrosts.

DOE requests comment on the proposed approach to account for long duration defrost cycles using an optional two-part test procedure consistent with the existing waiver approach granted for such models. DOE also requests comment on whether any additional provisions are necessary to account for different defrost operation or controls, and on DOE's proposed approach in which the test period would start with the defrost occurrence having the longest interval between defrosts.

2. Total Display Area

Section 3.2 of appendix B provides instructions regarding the measurement of TDA. That section specifies that TDA is the sum of the projected area(s) of visible product, expressed in square feet (''ft^2'') (*i.e.,* portions through which product can be viewed from an angle normal, or perpendicular, to the transparent area).

For certain CRE configurations, merchandise is not necessarily located at an angle directly normal, or perpendicular, to the transparent area despite the transparent area being intended for customer viewing. For example, for service over counter ice-cream freezers, the ice cream containers may be placed within the chest portion of the refrigerated case, with a glass display panel on the front and glass rear doors located above the merchandise storage area. If the glass display areas are nearly vertical, the ice cream containers may be positioned low enough in the case that they are not at a viewing angle perpendicular to the glass. However, during typical use, customers would stand close enough to the display glass that the ice cream would be visible from other angles not perpendicular to the glass.

In the June 2021 RFI, DOE requested feedback on whether the TDA definition and test instructions should account for display areas in which the merchandise is not at a location normal to the display surface. 86 FR 31182, 31192. If so, DOE requested information on how to define the revised display area. *Id.* DOE also requested comment on other CRE applications or configurations for which the TDA, as currently defined, may not adequately represent the display functionality of the equipment. *Id.*

Arneg commented that an amended TDA definition is needed because merchandise is not always at a location normal to the display, such as service over counter cases. (Arneg, No. 12, p. 2) True commented that TDA should not account for display areas in which the merchandise is not at a location normal to the display surface, and that the testing standard should only use the display visibility as defined in AHRI 1200–2013. (True, No. 4, p. 21)

AHRI and Hussmann asked DOE to further clarify the units being described by ''display areas in which the merchandise is not at a location normal to the display surface,'' specifically, if DOE is referring to deli counter type cases with display areas outside the doors themselves. (AHRI, No. 3, p. 15; Hussmann, No. 14, p. 17)

DOE participated in the committee discussions to consider updates to AHRI 1200–2013. These discussions included TDA and whether any additional updates would be appropriate. The industry committee determined to maintain the existing definition and approach, which is based on the visibility of merchandise at a location normal to the display surface, but to include additional diagrams to clarify the determination of TDA. *See* Appendix D to AHRI 1200–202X. Figure 10 in AHRI 1200–202X appendix D shows a service over counter unit similar to the example described earlier in this section. The food load is included only in the lowest portion of the refrigerated cabinet, and as a result, only portions of the transparent areas are considered for the TDA (*i.e.,* the portions through which the food load is visible at an angle normal to the transparent area).

Consistent with the updated version of AHRI 1200–202X, DOE is not proposing revisions to the current TDA. As discussed, DOE is proposing to incorporate by reference AHRI 1200–202X, which includes the new Appendix D to provide clarification on how to apply the current TDA approach to different CRE configurations.

DOE is aware that the current DOE test procedure includes conflicting instructions regarding the calculation of TDA for CRE with transparent and non-transparent areas over the length of the case. The instructions in section 3.1 of appendix B specify determining the length of the display area as the interior length of the CRE model, provided no more than 5 inches of that length consists of non-transparent material, or, for those cases with greater than 5 inches of non-transparent area, the length shall be determined as the projected linear dimension(s) of visible product plus 5 inches. Figures A3.4 and A3.5 of appendix B show a similar approach, but instead reference 10 percent of the total length as the threshold of non-transparent area rather than 5 inches. The captions for these figures reference 5 inches, consistent with section 3.1. The April 2014 Final Rule established these TDA provisions in appendix B. 79 FR 22277, 22300–22301. In the final rule, DOE stated that the 10-percent approach rather than the 5-inch approach would allow for more consistent application of the TDA requirements across CRE models. *Id.*

In addition, DOE incorrectly applied the 10-percent threshold approach as shown in Figures A3.4 and A3.5 of appendix B. As discussed, DOE intended to provide a consistent TDA approach for cases with transparent and non-transparent area. The equation for length shown in Figure A3.5 shows that length equals the total transparent dimension, multiplied by 1.10. As a result, the non-transparent area would represent 10 percent of the transparent dimension, not 10 percent of the total length. The correct application would have length equal to the transparent dimension divided by 0.9—resulting in a non-transparent area representing 10 percent of the total length.

Section D.1.1.1 of AHRI 1200–202X appendix D includes correct equations regarding TDA and case length as intended in the April 2014 Final Rule. Specifically, AHRI 1200–202X applies the 10 percent threshold approach for non-transparent area and correctly calculates the length of the CRE for cases with non-transparent areas greater than 10 percent of the length of the case.

As discussed, DOE is proposing to incorporate by reference AHRI 1200–202X, which would correct these errors regarding TDA calculations currently included in appendix B.

G. Alternative Refrigerants

DOE's current test procedure for remote condensing CRE requires the estimation of compressor EER from Table 1 of AHRI 1200–2010. The EER ratings in the table are based on performance of reciprocating compressors and were developed based on refrigerants that historically have been commonly used for CRE (*i.e.,* R–404A).

Certain remote CRE installations can use carbon dioxide (''CO_2'') as the refrigerant; however, the existing remote CRE test procedure does not address the unique operation for these systems. For example, the current DOE test procedure requires an inlet refrigerant liquid temperature of 80 °F with a saturated liquid pressure corresponding to a condensing temperature of 89.6 °F to 120.2 80 °F. *See* ASHRAE 72–2005, Sections 4.3.2 and 4.3.3. CO_2 has a critical point of 87.8 °F and 1,070 pounds per square inch (''psi''), above which it is a supercritical fluid. Accordingly, CO_2 cannot be a liquid at the specified condensing temperature conditions (*i.e.,* it would either be a gas or supercritical fluid, depending on pressure). Additionally, CO_2 systems typically include multiple stages of compression and cooling, resulting in liquid supplied to the refrigerant cases at conditions not necessarily defined by the typical condensing unit conditions. DOE has recently granted a waiver for specific models of CRE to address CO_2 operating conditions for testing walk-in cooler and walk-in freezer unit coolers. 86 FR 14887 (March 19, 2021; ''March 2021 Waiver''). The March 2021 Waiver requires for testing of the specified basic models liquid inlet saturation temperature and liquid inlet subcooling of 38 °F and 5 °F, respectively. 86 FR 14887, 14889. The March 2021 Waiver also maintains the existing compressor energy consumption determination based on an approach consistent with the CRE remote calculations using AHRI 1200–2010 (the walk-in requirements instead refer to the walk-ins rating standard, AHRI 1250–2009, which includes the same EER table as AHRI 1200–2010). *Id.*

In the June 2021 RFI, DOE requested information on the typical conditions for remote CRE intended for use with CO_2 refrigerant. 86 FR 31182, 31192. DOE requested comment and data on the applicability of the EER values in Table 1 of AHRI 1200–2010 to the typical compressor EERs for CO_2 refrigerant systems. *Id.* DOE also requested information and supporting data on whether the existing test procedure is appropriate for any other alternative refrigerants that may be used for remote CRE. *Id.* DOE requested feedback on whether the operating conditions specified in ASHRAE 72–2005 or the standardized EER values in Table 1 of AHRI 1200–2010 should be revised to account for operation with any other alternative refrigerants. *Id.* DOE also requested usage data regarding the range of refrigerants in the remote CRE market. *Id.*

Hussmann and AHRI commented that OEMs with CO_2 systems use the EER values in AHRI 1200–2013 to provide comparison of products and energy consumption based on typical operating conditions, and as the use of CO_2 systems evolve the industry test standard organizers will research whether changes are necessary to the EER tables. (Hussmann, No. 14, p. 17; AHRI, No. 3, p. 15) Regarding the use of other refrigerants, AHRI and Hussmann commented that the EER values in Table 1 of AHRI 1200–2013 are representative of use agnostic to the refrigerant because the values would vary little for specific alternative refrigerants. (AHRI, No. 3, p. 15; Hussmann, No. 14, p. 18) AHRI and Hussmann commented that AHRI 1200–202X provides additional clarifications to address the glide of the newer alternative refrigerants. (AHRI, No. 3, p. 15; Hussmann, No. 14, p. 18)

Arneg commented that DOE should wait for an update to ASHRAE 72 to address CO_2 because the ASHRAE 72 committee will be considering the issue of typical conditions for CO_2 remote CRE. (Arneg, No. 12, p. 2)

NEEA asserted that Table 1 of AHRI 1200–2013 is not representative of CO_2 refrigeration systems, and recommended that DOE adopt representative EER tables for natural refrigerants. (NEEA, No. 5, p. 5–6)

NEEA commented that DOE should review current test procedures to ensure applicability to CRE with natural refrigerants. (NEEA, No. 5, p. 5) NEEA commented that the American Innovation and Manufacturing Act would reduce the use of hydrofluorocarbons (''HFCs'') by 85 percent by 2035, and that natural refrigerants such as CO_2 and propane (R–290) are already widely used in commercial refrigeration. (*Id.*)

NEEA commented that DOE should consider establishing test procedures that account for the unique operation and energy use of systems that use natural refrigerants, such as secondary refrigerant loops and trans critical booster systems typical of CO_2 based systems. (NEEA, No. 5, p. 5) NEEA commented that DOE could use documentation such as the National Renewable Energy Lab's (''NREL'') Refrigeration Playbook [33] as a resource. (*Id.*) NEEA commented that ASHRAE has discussed technical challenges related to natural refrigerants and encouraged DOE to explore ASHRAE 15–2019 to determine appropriate testing considerations. (*Id.*) NEEA commented to refer to case studies suggesting that CO_2 refrigerants can increase the efficiency of CRE systems up to 27 percent. (*Id.*) NEEA commented that DOE's test procedures should reflect actual energy use, even in cases where energy usage increases. (*Id.*)

For all remote CRE, the DOE test procedure requires measuring energy consumption of the refrigerated case and the heat gain of the refrigerant providing cooling to the remote case. AHRI 1200–2010 specifies a calculation of compressor energy consumption based on the heat gain measured for the test refrigerant. DOE is aware that manufacturers may specify the use of multiple refrigerants for a single remote CRE cabinet and that the current test procedure allows for consistent testing of such equipment regardless of refrigerant used for testing. As indicated by Hussmann and AHRI, manufacturers are already testing and rating systems that can use CO_2, likely by testing with non-CO_2 refrigerants under the existing test conditions, according to the existing approach, which references AHRI 1200–2010. DOE expects that any ratings for current CO_2 systems are based on testing with another refrigerant capable of maintaining the conditions specified in ASHRAE 72–2005.

Based on a review of CRE that are capable of using CO_2 refrigerant, DOE has observed that many of these models also may be installed for use with other refrigerants that can be tested under the existing approach. However, any remote CRE that are intended for use only with CO_2 refrigerant would not be able to be tested according to the current DOE test procedure due to the specified liquid conditions specified in ASHRAE 72–2005. To allow for testing remote CRE with CO_2 refrigerant, DOE is proposing to adopt alternate refrigerant conditions consistent with those granted in the March 2021 Waiver for walk-in cooler and walk-in freezer unit coolers with CO_2 refrigerant. DOE is proposing that

[33] NREL ''Refrigeration Playbook: Natural Refrigerants. Selecting and Designing Energy Efficient Commercial Refrigeration Systems That Use Low Global Warming Potential Refrigerants''.

for remote CRE tested with direct expansion CO_2, the liquid inlet saturation temperature be 38 °F with liquid inlet subcooling of 5 °F.

DOE research into the performance of different configurations of CO_2 booster systems indicates that enhanced CO_2 cycles can match conventional refrigerants in average efficiency. Even though the EER values included in AHRI 1200–202X for remote compressors were initially established for conventional refrigerants, DOE has tentatively determined that they are also appropriate for determining compressor energy consumption of CO_2 remote systems. DOE recognizes that the actual compressor energy consumption of a specific remote system will vary based on a number of parameters (ambient conditions, refrigerant conditions necessary for the remote cases, *etc.*), but has tentatively determined that the values included in AHRI 1200–202X are appropriate for determining the energy consumption of an average use cycle for all remote CRE as tested under the proposed test procedure.

In addition to CO_2, DOE has tentatively determined that the EER table in AHRI 1200–202X is appropriate for other alternative refrigerants. DOE similarly researched compressor EERs at a range of operating conditions for refrigerants other than R–404A, including R–407A, R–407F, and R–507A, and found the existing EERs to be representative based on expected operating conditions. Additionally, AHRI 1200–202X further improves the consistency of the EER approach by including additional instructions regarding the use of high-glide refrigerants, as discussed in section III.B.1.a of this NOPR. DOE is not proposing additional amendments to address alternative refrigerants other than CO_2 in this NOPR.

DOE requests comment on the proposed alternate refrigerant conditions to be used for testing remote CRE with CO_2 refrigerant. DOE requests comment on whether any other aspects of the current test procedure require amendment to allow for testing with CO_2 or any other alternative refrigerants.

H. Certification of Compartment Volume

DOE's current test procedure incorporates by reference AHAM HRF–1–2008 to measure compartment volume. DOE acknowledges that manufacturers often use computer aided designs (''CAD'') in designing their equipment. However, the current test procedure and certification provisions for CRE do not provide for using CAD drawings to determine compartment volume. Using the CAD as the basis for determining compartment volumes may be particularly helpful when the geometric designs of the CRE make physical measurements in accordance with AHAM HRF–1–2008 difficult. Currently, DOE's certification requirements in 10 CFR part 429 include provisions for certifying volume for basic models of consumer refrigeration products, commercial gas-fired and oil-fired instantaneous water heaters, and hot water supply boilers using CAD drawings. 10 CFR 429.72(c), (d), and (e).

In the June 2021 RFI, DOE requested comment on whether allowing manufacturers to certify compartment volumes for CRE basic models using CAD drawings would introduce any testing or certification issues. 86 FR 31182, 31192. DOE also requested information on the extent to which the use of CAD drawings may reduce manufacturer test burden. *Id.*

ITW, AHRI, Arneg, True, and Hussmann commented in support of using CAD drawings to ensure appropriate volume measurements and minimize any errors. (ITW, No. 2, p. 11; AHRI, No. 3, p. 15; Arneg, No. 12, p. 2; True, No. 4, p. 22; Hussmann, No. 14, p. 18) AHRI and Hussmann commented that AHRI Standard 1200–202X has allowances for CAD drawings to illustrate volumes. (AHRI, No. 3, p. 15; Hussmann, No. 14, p. 18) Arneg commented that CRE cases can be manufactured to have curvature, such that the only accurate way of calculating volume would be to use CAD software. (Arneg, No. 12, p. 2) True commented that there should be a validation or verification process since this type of measurement depends on the CAD application user. (True, No. 4, p. 22)

DOE has tentatively determined that calculating volume according to CAD drawings would reduce manufacturer test burden and may allow for more accurate measurements of volume for complicated cabinet designs. DOE is proposing to adopt provisions in 10 CFR part 429 to allow for certifying volume for basic models of CRE using CAD drawings. To ensure that volumes determined based on CAD drawings are consistent with testing actual production models, DOE proposes certain enforcement provisions in section III.J of this NOPR.

I. Test Procedure Waivers

A person may seek a waiver from the test procedure requirements for a particular basic model of a type of covered equipment when the basic model for which the petition for waiver is submitted contains one or more design characteristics that: (1) Prevent testing according to the prescribed test procedure, or (2) cause the prescribed test procedures to evaluate the basic model in a manner so unrepresentative of its true energy consumption characteristics as to provide materially inaccurate comparative data. 10 CFR 431.401(a)(1).

In addition to the test procedure waivers discussed, DOE has granted test procedures waivers to address certain CRE designed for specialized applications. Specifically, on September 12, 2018, DOE published a test procedure waiver for ITW for testing specified basic models of grocery and general merchandise system (*i.e.,* refrigerated storage allowing for order storage and customer pickup). 83 FR 46148 (''September 2018 Waiver''). The specified basic models have characteristics that include floating suction temperatures for individual compartments, different typical door-opening cycles, and a high-temperature ''ambient'' compartment. 83 FR 46148, 46149. DOE has similarly granted Hussmann an interim waiver for testing CRE intended for short-term storage and designed for loading and retrieving product a limited number of times per day. 86 FR 40548 (July 28, 2021; ''July 2021 Interim Waiver'').

In the June 2021 RFI, DOE requested feedback on whether the test procedure waiver approach required under the September 2018 Waiver, which includes the same door opening approach as required in the July 2021 Interim Waiver, is generally appropriate for testing basic models with these features. 86 FR 31182, 31193.

AHRI, Hussmann, and ITW commented that the test procedure waivers are appropriate for testing basic models of CRE addressed by the waivers. (AHRI, No. 3, p. 16; Hussmann, No. 14, p. 19; ITW, No. 2, p. 11) ITW commented that the basic models outlined have little market penetration, availability, and appear to be single sourced, such that further effort is unwarranted. (ITW, No. 2, p. 11)

The CA IOUs commented that several petitions for test procedure waivers have been submitted by manufactures and support the door opening methodology granted in those waivers. The CA IOUs asserted that an 8-second door opening cycle once every two hours for 10 hours seems more representative of real-world operation than door opening cycles once every 10 minutes for eight hours in ASHRAE 72–2018). (CA IOUs, No. 10, p. 6–7)

The CA IOUs review of product data for these units found these units are designed to operate in outdoor

conditions or have configurations designed for outdoor environments and referenced the ASHRAE standard for testing beverage vending machines, which includes a test condition at 90 °F and 65 percent relative humidity to account for outdoor installations. (CA IOUs, No. 10, p. 6–7)

DOE is proposing to adopt test procedure provisions to address the equipment characteristics at issue in the September 2018 Waiver and the July 2021 Interim Waiver. For both waiver cases, the subject basic models are intended for short-term storage of refrigerated merchandise and limited door opening cycles per day; *e.g.,* for holding customer orders and maintaining refrigerated temperatures until customer pickup. DOE understands that this equipment includes individual secured compartments that are accessible only to the customer for order retrieval—*e.g.,* by providing the customer with a unique unlocking function to access the compartment. DOE also conducted a review of the market of this type of equipment and found similar characteristics and features in currently available models (*e.g.,* contactless pick-up of customer orders using digital locks). Therefore, DOE is proposing to define this equipment as ''customer order storage cabinets'' to differentiate it from other CRE. DOE is proposing to define ''customer order storage cabinets'' as CRE that store customer orders and include individual, secured compartments with doors that are accessible to customers for order retrieval.

Consistent with the waiver and interim waiver, DOE is proposing that customer order storage cabinets be tested according to the conventional CRE test procedure, except that the door openings be conducted by opening each door to the fully open position for 8 seconds, once every 2 hours, for 6 door-opening cycles. DOE has tentatively determined that this proposed approach, which is consistent with the September 2018 Waiver and the July 2021 Interim Waiver, is representative of typical use of this equipment.

DOE requests comment on the proposed definition and term ''customer order storage cabinet'' to describe the equipment currently addressed in the September 2018 Waiver and the July 2021 Interim Waiver. DOE requests comment on the proposal to test such equipment with reduced door openings, consistent with the waiver and interim waiver approach.

In addition to the door opening cycles, the September 2018 Waiver specifies testing provisions for other characteristics of the specified basic models, including floating suction temperatures for individual compartments and the presence of a high-temperature ''ambient'' compartment. 83 FR 46148, 46149–46152.

To address the floating suction temperature aspect of the basic models subject to the September 2018 Waiver, DOE requires the use of an alternate test approach for testing and rating the equipment in a manner similar to the remote CRE test procedure. 83 FR 46148, 46151. Specifically, DOE requires that this equipment be tested using an inverse refrigeration load test (*i.e.,* a reverse heat leak method). *Id.* This test allows for determining the thermal load of the cabinet at the specified storage temperatures without requiring refrigerant to be supplied to the unit (as refrigerant is supplied from an integral condensing unit). The September 2018 Waiver specifies calculating energy consumption associated with the thermal load based on assumed EERs, consistent with those specified in AHRI 1200–2010. 83 FR 46148, 46151–46152. The calculations also account for component energy consumption and heat loads. *Id.* DOE is proposing to adopt this alternate test procedure for any customer order storage cabinets that supply refrigerant to multiple individual secured compartments and that allow the suction pressure from the evaporator in each individual secured compartment to float based on the temperature required to store the customer order in that individual secured compartment.

For the high-temperature ''ambient'' compartments in the basic models specified in the September 2018 Waiver, DOE requires that testing be based on a 75 °F storage temperature for these compartments and that the ambient compartment be treated as a medium temperature compartment at 75 °F. 83 FR 46148, 46150. The September 2018 Waiver also requires that all volume and energy consumption calculations be included within the medium temperature category and summed with other medium temperature compartment(s) calculations. *Id.* The September 2018 Waiver further requires that compartments that are convertible between ambient and refrigerator temperature ranges be tested at the refrigerator temperature (38 °F) and that compartments that are convertible between refrigerator and freezer (0 °F) temperature ranges be tested at both temperatures. *Id.* DOE is proposing to adopt the existing waiver instructions for customer order storage cabinets that have at least one individual secured compartment that is not capable of maintaining an IAT below the ambient dry-bulb temperature (*i.e.,* the individual secured compartments may include refrigeration systems to ensure proper storage temperatures but are only intended to operate at an IAT of 75 °F ± 2 °F and not at a LAPT or the specified refrigerator or freezer temperatures). Additionally, with the proposed introduction of high-temperature refrigerators, as discussed in sections III.A.1 and III.B.1.b of this NOPR, DOE is proposing that such compartments would be treated as high-temperature refrigerators rather than refrigerators upon the compliance date of any new energy conservation standards for high-temperature refrigerators.

DOE requests comment on the additional proposed test procedure amendments that would allow for reverse heat leak testing of customer order storage cabinets with floating suction pressures for multiple different temperature compartments.

J. Enforcement Provisions

Subpart C of 10 CFR part 429 establishes enforcement provisions applicable to covered products and covered equipment, including CRE. Product-specific enforcement provisions are established in 10 CFR 429.134. Various provisions in 10 CFR 429.134 specify which ratings or measurements DOE will use to determine compliance with applicable energy or water conservation standards. Generally, DOE provides that the certified metric is used for enforcement purposes (*e.g.,* calculation of the applicable energy conservation standard) if the average value measured during assessment and enforcement testing is within a specified percent of the rated value. Otherwise, the average measured value would be used.

Section 10 CFR 429.134 currently does not contain product-specific enforcement provisions for CRE. However, DOE does currently provide product-specific enforcement provisions for refrigerated bottled or canned beverage vending machines, specifying that the certified refrigerated volume will be considered valid only if the measurement(s) (either the measured refrigerated volume for a single unit sample or the average of the measured refrigerated volumes for a multiple unit sample) is within five percent of the certified refrigerated volume. 10 CFR 429.134(j)(1). The test procedure for measuring volume of beverage vending machines is consistent with the procedure required for CRE, and vending machines typically have volumes similar to those for CRE.

Because of the same test methods and similar equipment sizes, DOE is proposing consistent product-specific enforcement provisions for CRE. Specifically, DOE proposes to add a new product-specific enforcement provision section stating that the certified volume for CRE will be considered valid only if the measurement(s) (either the measured volume for a single unit sample or the average of the measured volumes for a multiple unit sample) is within five percent of the certified volume; otherwise, the measured volume would be used as the basis for determining the applicable energy conservation standard.

DOE has also established product-specific enforcement provisions for transparent areas of beverage vending machines. 10 CFR 429.134(j)(2). However, display area is only used to determine equipment class for beverage vending machines and TDA is not a metric used to determine applicable energy conservation standards. For consistency with the volume approach, DOE is proposing for CRE that the certified TDA for CRE will be considered valid only if the measurement(s) (either the measured TDA for a single unit sample or the average of the measured TDAs for a multiple unit sample) is within five percent of the certified TDA. If the certified TDA is found to not be valid, the measured TDA would be used to determine the applicable energy conservation standard.

DOE requests comment on the proposed product-specific enforcement provisions for CRE.

K. Lowest Application Product Temperature

Section 2.2 of appendix B specifies that if a unit is not able to be operated at the specified IAT, the unit is tested at the LAPT, which is defined in 10 CFR 431.62 as the lowest IAT at which a given basic model is capable of consistently operating (*i.e.,* maintaining so as to comply with the steady-state stabilization requirements specified in ASHRAE 72–2005 for the purposes of testing under the DOE test procedure). Section 2.2 of appendix B specifies that for units equipped with a thermostat, LAPT is the lowest thermostat setting; for remote condensing equipment without a thermostat or other means of controlling temperature at the case, the LAPT is the temperature achieved with the dew point temperature (as defined in AHRI Standard 1200–2010) set to 5 degrees colder than that required to maintain the manufacturer's lowest specified application temperature.

DOE's compliance certification database [34] lists all CRE models certified to DOE, including the LAPT used for rating each model, if applicable. Of the 28,478 single-compartment individual models included in the compliance certification database at the time of this analysis, 460 individual models are rated at LAPTs. Of these individual models, 77 are rated at LAPTs below the required test IAT. For example, multiple refrigerator models are rated at an IAT of 34 °F (instead of 38 °F ± 2 °F), and multiple freezer models are rated at an IAT of –7 °F (instead of 0 °F ± 2 °F).

DOE is proposing to maintain the current LAPT provisions and add an additional provision for testing CRE that are only capable of maintaining temperatures below the specified IAT (or for buffet tables or preparation tables, the average pan temperature of all measurements taken during the test) range. For these units, DOE proposes to test at the highest thermostat setting. This would allow for testing the CRE under the setting closest to the required IAT (or for buffet tables or preparation tables, the average pan temperature of all measurements taken during the test). DOE proposes to amend the definition of LAPT in 10 CFR 431.62 to the following:

''Lowest application product temperature'' means the integrated average temperature (or for buffet tables or preparation tables, the average pan temperature of all measurements taken during the test) at which a given basic model is capable of consistently operating that is closest to the integrated average temperature (or for buffet tables or preparation tables, the average pan temperature of all measurements taken during the test) specified for testing under the DOE test procedure.

For testing, DOE is proposing to specify that if a unit is not able to operate at the integrated average temperature specified for testing, or average pan temperature, as applicable, test the unit at the LAPT, as defined in § 431.62. DOE is proposing that for units equipped with a thermostat, LAPT is the lowest thermostat setting (for units that are only able to operate at temperatures above the specified integrated average temperature or average pan temperature) or the highest thermostat setting (for units that are only able to operate at temperatures below the specified integrated average temperature or average pan temperature). DOE is proposing that for remote condensing equipment without a thermostat or other means of controlling temperature at the case, the LAPT is the temperature achieved with the dew point temperature, or mid-point evaporator temperature for high-glide refrigerants (as defined in AHRI Standard 1200–202X), set to 5 degrees colder than that required to maintain the manufacturer's specified application temperature closest to the specified integrated average temperature or average pan temperature.

DOE has tentatively determined that this proposal would not affect current CRE ratings or testing costs because the models currently available on the market that would be tested under the newly proposed provision are already and testing and rating in accordance with the proposed approach.

L. Removal of Obsolete Provisions

The DOE test procedure in appendix B is required for testing CRE manufactured on or after March 28, 2017, and appendix A applies to CRE manufactured prior to that date. As such, appendix A is now obsolete for new units being manufactured. Therefore, DOE is proposing to remove appendix A. DOE is not proposing to redesignate appendix B as appendix A in order to avoid confusion regarding the appropriate version of the test procedure required for use.

Additionally, the title to appendix B is currently ''Amended Uniform Test Method for the Measurement of Energy Consumption of Commercial Refrigerators, Freezers, and Refrigerator-Freezers.'' To avoid confusion with the other test procedure amendments proposed in this NOPR, DOE is proposing to amend the title to appendix B to remove the word ''amended.''

DOE is also proposing to remove outdated standards incorporated by reference in 10 CFR 431.63 that would no longer be referenced under the proposed test procedure. Specifically, DOE proposes to remove reference to ANSI/AHAM HRF–1–2004, AHAM HRF–1–2008, and ASHRAE 72–2005. DOE would maintain the listing of standards referenced in 10 CFR 431.66 (''Energy conservation standards and their effective dates'') and would consider removing those referenced standards when proposing any amendments to that section of the CFR as part of any future amended energy conservation standards.

M. Additional Topics Raised in Comments From Interested Parties

In response to the June 2021 RFI, DOE received comments from interested parties on topics not raised in the RFI and not specifically related to the

[34] Available at *www.regulations.doe.gov/certification-data.*

proposals presented in this NOPR. DOE summarizes and addresses these comments in the following sections.

1. Refrigerant Leakages and Life Cycle Performance

IGSD commented that the CRE test procedure should account for the energy performance impact of refrigerant leakages. (IGSD, No. 7, p. 1) IGSD commented that a typical supermarket refrigeration system has an average annual leak rate of 25 percent, according to the EPA. (*Id.*) IGSD commented that these leak rates must be known to accurately estimate the performance of CRE, since high leak rates result in undercharged refrigerant systems that significantly deteriorate energy efficiency. (*Id.*) IGSD asserted that this can result in up to 138 percent efficiency impact of annual energy consumption over a 15-year lifespan, increasing electricity use and electricity related emissions. (*Id.*) IGSD commented that use of leak detection and energy monitoring in one supermarket chain reduced electricity use by 23 million kWh per year. (*Id.*)

IGSD commented that DOE should account for the greenhouse gas emissions associated with refrigerant leaks and that large commercial refrigeration units using common refrigerants (*e.g.,* R–404A) have lifetime emissions over 22,000 tonnes of CO_2 equivalent using 100-year GWPs and 35,000 tonnes using 20-year GWPs.[35] (IGSD, No. 7 at p. 2) IGSD commented that this inclusion would encourage the adoption of leak reduction strategies, thus improving energy efficiency and presents potential to capture large electricity savings and electricity-related GHG emissions. (*Id.*)

IGSD further commented that the CRE test procedure should inform the lifecycle energy and climate performance of regulated equipment as sustainable procurement practices are becoming more widespread and information on CRE energy and climate performance is increasingly in demand. (IGSD, No. 7, p. 2)

IGSD commented that in 2016, the International Institute for Refrigeration (''IIR'') released guidelines to harmonize life-cycle climate performance (''LCCP'') calculations for refrigeration systems and under these guidelines, emissions in LCCP assessments account for refrigerant charge, the average unit lifetimes, the annual leakage rates, and the end-of-life leakage rates, annual energy consumption, and the amount of CO_2 emitted per kWh. IGSD commented the test requirements in the AHRI 1320–2011 or AHRI 1200–2010 should be collected to inform LCCP assessments that can be made using the IIR guidelines by DOE and its partner laboratories. (*Id.*)

IGSD further commented that the CRE test procedure should inform refrigeration design requirements similar to those found in the European Union's Eco-Design Directive (Directive 2009/1255/EC), which recognizes the larger environmental impact of CRE, especially during servicing activities where refrigerant leakages are most likely to occur and should be developed in the US as well. (IGSD, No. 7 at p. 3)

As discussed previously in this NOPR, the DOE test procedure for remote CRE assesses the thermal load of a refrigerated unit and estimates the compressor energy consumption associated with that thermal load based on Table 1 in AHRI 1200–2010. Refrigerant leakage is an aspect of refrigeration system design outside of the individual CRE model performance. Refrigerant charging, leak mitigation, and the associated energy consumption impacts are aspects of the overall refrigeration system based on installation, rather than metrics that can be quantified for basic models of CRE.

DOE is not proposing to account for remote refrigerant leakages in its CRE test procedure. However, to the extent that refrigerant leakage could impact compressor efficiencies as specified in Table 1 in AHRI 1200–2010 and AHRI 1200–202X, DOE welcomes additional information on whether different EER values would better represent actual operation for remote CRE.

2. Refrigerant Collection for Remote Testing

King commented, regarding remote testing, that DOE should establish a listing for non-profit organization recollection and distribution of refrigerants used during applicable testing and for finalized system sealant. (King, No. 9, p. 1) Refrigerant recovery and recycling requirements are established by EPA,[36] not DOE. To the extent that third-party or manufacturer test facilities require the use of refrigerants to test remote CRE, it is the responsibility of the test facility to ensure proper use and collection of the refrigerants.

3. Energy Conservation Standards

In response to the June 2021 RFI, DOE received multiple comments from interested parties on topics related to the CRE test procedures, but more directly applicable to the consideration of new or amended energy conservation standards for CRE. Specifically, DOE received comments regarding topics related to energy conservation standards from the Joint Commenters, ITW, True, NEEA, AHRI, Hussmann, IGSD, CA IOUs, and Continental. (Joint Commenters, No. 8, p. 1–2; ITW, No. 2, p. 1–6; True, No. 4, p. 3–23; NEEA, No. 5, p. 2–7; AHRI, No. 3, p. 3–15; Hussmann, No. 14, p. 5–10; IGSD, No. 7, p. 3; CA IOUs, No. 10, p. 3–9; Continental, No. 6, p. 2) DOE will consider those comments as part of any subsequent rulemaking document related to energy conservation standards for CRE.[37]

N. Sampling Plan

DOE's current certification requirements mandate reporting of the chilled or frozen compartment volume in cubic feet, the adjusted volume in cubic feet, or the TDA (as appropriate for the equipment class). 10 CFR 429.42(b)(2)(iii). However, the sampling plan requirements in 10 CFR 429.42(a) do not specify how to determine the represented value of volume or TDA for each basic model based on the test results from the sample of individual models tested. Similar to the requirements for other covered products and commercial equipment, DOE is proposing that any represented value of volume or TDA for the basic model be determined as the mean of the measured volumes or TDAs for the units in the test sample, based on the same tests used to determine the reported energy consumption. Although not currently specified in 10 CFR 429.42, DOE expects manufacturers are currently certifying CRE performance based on the tested volume and TDA. Therefore, this proposed amendment would clarify the certification requirements but not impose any additional burden on manufacturers.

DOE seeks comment on the proposed sampling plan for CRE volume and TDA.

O. Test Procedure Costs and Harmonization

1. Test Procedure Costs and Impact

In this NOPR, DOE proposes to amend the existing test procedure for CRE to:

[35] Values calculated using the California Air Resources Board's (''CARB'') Refrigerant Calculator.

[36] See *www.epa.gov/section608/refrigerant-recovery-and-recycling-equipment-certification.*

[37] DOE has published a **Federal Register** notice undertaking an early assessment review for amended energy conservation standards for CRE to determine whether to amend applicable energy conservation standards for this equipment. 86 FR 37708 (July 16, 2021). Documents related to this action are available in docket ID EERE–2017–BT–STD–0007, available at *www.regulations.gov/docket/EERE-2017-BT-STD-0007.*

(1) Establish new definitions for high-temperature refrigerator, medium-temperature refrigerator, low-temperature freezer, and amend the definition for ice-cream freezer.

(2) Incorporate by reference the most current versions of industry standards AHRI 1200, ASHRAE 72, and AHRI 1320–2011.

(3) Establish definitions and test procedures for buffet tables and preparation tables.

(4) Establish definitions and test procedures for blast chillers and blast freezers.

(5) Amend the definition for chef base or griddle stand.

(6) Specify alternate conditions for alternative refrigerants.

(7) Allow for certification of compartment volumes based on CAD drawings.

(8) Incorporate provisions for defrosts and customer order storage cabinets currently specified in waivers and interim waivers.

(9) Adopt product-specific enforcement provisions.

(10) Clarify use of the LAPT provisions.

(11) Remove the obsolete test procedure in appendix A.

(12) Specify a sampling plan for volume and TDA.

DOE has tentatively determined that the proposed amendments to the test procedure for CRE currently subject to testing would not impact testing costs and manufacturers would be able to rely on data generated under the current test procedure should any of these additional proposed amendments be finalized.

DOE is proposing to establish test procedures for additional categories of CRE not currently subject to the DOE test procedure: buffet tables or preparation tables, and blast chillers and blast freezers. If a manufacturer chooses to make representations of the energy consumption of this equipment, beginning 360 days after a final rule, were DOE to finalize the proposal, manufacturers would be required to test according to the proposed test procedure. (42 U.S.C. 6314(d)). DOE discusses the costs associated with testing this equipment, if a manufacturer chooses to make representations of the energy consumption, in the following paragraphs.

In a 2010 NOPR, DOE estimated CRE testing costs to be approximately $5,000 per unit. 75 FR 71596, 71607 (November 24, 2010). Based on testing at third-party test facilities, DOE has tentatively determined that $5,000 is still a representative CRE test cost based on the existing DOE test procedure. DOE has also tentatively determined that $5,000 is a representative per-test cost for the new test procedures proposed for the additional CRE categories (*i.e.,* buffet tables or preparation tables, blast chillers, and blast freezers).

For buffet tables and preparation tables, the overall test duration would be similar to the test duration for CRE currently subject to the test procedure. The test would be a 24-hour test and DOE is proposing stabilization requirements consistent with CRE currently subject to the test procedure. The proposed test setup would not require the use of test simulators or test filler materials loaded in any refrigerated compartments, but would require loading pans with distilled water and identifying the appropriate control setting to maintain the specified average temperatures. DOE expects the overall test burden associated with loading and determining appropriate control settings to be similar for testing buffet tables and preparation tables, as proposed, and other CRE currently subject to the test procedure. While DOE has not quantified the differences in test burden, DOE has initially determined that the test burden and duration for buffet and preparation tables is similar to CRE currently subject to the test procedure, and therefore the $5,000 per-test cost is appropriate.

For blast chillers and blast freezers, the overall duration of a test as proposed would be shorter than the 24-hour test period and stabilization period required for CRE currently subject to the test procedure. As proposed, blast chiller and blast freezer testing would require the preparation of food simulator material, heating of that material to the specified temperature, loading of the heated test pans, and then conducting the test procedure as specified (DOE estimates approximately an 8-hour test duration per test). While DOE has not quantified the differences in test burden, DOE expects the increased test burden and decreased test burden to be comparable. Therefore, DOE has tentatively determined that $5,000 is a representative per-unit test cost for blast chillers and blast chillers, based on the test procedure proposed in this NOPR.

Under the proposed test procedures, were a manufacturer to choose to make representations of the energy consumption of buffet tables or preparation tables, blast chillers, or blast freezers beginning 360 days after a final rule, were DOE to finalize the proposal, manufacturers would be required to base such representations on the DOE test procedure. (42 U.S.C. 6314(d))

Based on a review of blast chillers and blast freezers available on the market, DOE has determined that manufacturers make no claims regarding the energy consumption of their models.

After establishing any test procedure for blast chillers and blast freezers, DOE expects that the manufacturers currently electing to make no claims regarding energy consumption would continue to do so. Therefore, DOE has tentatively determined that the proposed test procedure for blast chillers and blast freezers would not impact testing costs should the proposed test procedure be finalized.

Buffet tables and preparation tables are currently subject to test procedures under the California Code of Regulations. DOE observed that to the extent that buffet table and preparation table manufacturers make representations regarding the energy consumption of their models, they do so in accordance with the California Code of Regulations. EPCA prescribes that, if DOE amends a test procedure, all representations of energy efficiency and energy use, including those made on marketing materials and product labels, must be made in accordance with that amended test procedure, beginning 360 days after publication of such a test procedure final rule in the **Federal Register**. (42 U.S.C. 6314(d)(1)) Therefore, the manufacturers currently making representations of the energy consumption of buffet tables and preparation tables would be required to re-test according to the proposed test procedure beginning 360 days after the final rule, should DOE finalize the proposal, and may incur some re-testing costs associated with their buffet table and preparation table models.

For any manufacturers not currently making representations of the energy use of buffet tables or preparation tables, blast chillers, or blast freezers, testing according to the proposed test procedure would not be required (other than if making voluntary representations of energy consumption) until the compliance date of any energy conservation standards for that equipment, should DOE adopt such standards.

2. Harmonization With Industry Standards

DOE's established practice is to adopt relevant industry standards as DOE test procedures unless such methodology would be unduly burdensome to conduct or would not produce test results that reflect the energy efficiency, energy use, water use (as specified in EPCA) or estimated operating costs of that product during a representative

average use cycle. 10 CFR 431.4; Section 8(c) of appendix A 10 CFR part 430 subpart C. In cases where the industry standard does not meet EPCA statutory criteria for test procedures DOE will make modifications through the rulemaking process to these standards as the DOE test procedure.

The test procedures for CRE at 10 CFR 431.63 incorporates by reference AHRI 1200–2010 for definitions, test rating conditions, and calculations; ASHRAE 72–2005 for test conditions, equipment, measurements, and test conduct; and AHAM HRF–1–2008 for the volume measurement method.

The industry standards DOE proposes to incorporate by reference via amendments described in this notice are discussed in further detail in section IV.N. DOE requests comments on the benefits and burdens of the proposed updates and additions to industry standards referenced in the test procedure for CRE.

AHRI 1200–2010 has been updated to AHRI 1200–202X to provide additional direction regarding application of the standard and to provide volume measurement instructions (eliminating the need to reference AHAM HRF–1–2008). ASHRAE 72–2005 has similarly been updated in ASHRAE 72–2018R to reorganize the standard, provide updated setup instructions, revise the test sequence, and provide additional instructions for some test measurements. DOE has tentatively determined that these updates provide additional detail for testing but would otherwise not impact energy consumption measurements compared to the current approach. DOE is also proposing to incorporate by refence an existing industry standard for testing buffet tables and preparation tables: ASTM F2143–16. This standard provides instructions regarding setup and test conduct.

DOE is also aware of the CRE industry standard NSF/ANSI 7–2021,[38] which establishes minimum food protection and sanitation requirements for the materials, design, manufacture, construction, and performance of CRE and CRE components.

P. Compliance Date and Waivers

EPCA prescribes that, if DOE amends a test procedure, all representations of energy efficiency and energy use, including those made on marketing materials and product labels, must be made in accordance with that amended test procedure, beginning 360 days after publication of such a test procedure final rule in the **Federal Register**. (42 U.S.C. 6314(d)(1)) To the extent the modified test procedure proposed in this document is required only for the evaluation and issuance of updated efficiency standards, use of the modified test procedure, if finalized, would not be required until the compliance date of updated standards. 10 CFR 431.4; Section 8(d) of appendix A 10 CFR part 430 subpart C.

Upon the compliance date of test procedure provisions of an amended test procedure, should DOE issue a such an amendment, any waivers that had been previously issued and are in effect that pertain to issues addressed by such provisions are terminated. 10 CFR 431.401(h)(3). Recipients of any such waivers would be required to test the products subject to the waiver according to the amended test procedure as of the compliance date of the amended test procedure. The amendments proposed in this document pertain to issues addressed by waivers and interim waivers granted to AHT (Case Nos. CR–006, 2017–007, 2020–023, 2020–025, 2022–001, and 2022–002), ITW (Case No. CR–007), and Hussmann (Case No. 2020–003). See sections III.F.1 and III.I of this NOPR for a discussion of the proposals to address the issues in the existing waivers and interim waivers. Were DOE to finalize the amendments pertaining to these waivers and interim waivers, at such time as testing were required according to the amended test procedure, the waivers and interim waivers granted to AHT, ITW, and Hussmann would terminate and they would be required to make representations based on the amended test procedure.

IV. Procedural Issues and Regulatory Review

A. Review Under Executive Orders 12866 and 13563

Executive Order (''E.O.'')12866, ''Regulatory Planning and Review,'' as supplemented and reaffirmed by E.O. 13563, ''Improving Regulation and Regulatory Review, 76 FR 3821 (Jan. 21, 2011), requires agencies, to the extent permitted by law, to (1) propose or adopt a regulation only upon a reasoned determination that its benefits justify its costs (recognizing that some benefits and costs are difficult to quantify); (2) tailor regulations to impose the least burden on society, consistent with obtaining regulatory objectives, taking into account, among other things, and to the extent practicable, the costs of cumulative regulations; (3) select, in choosing among alternative regulatory approaches, those approaches that maximize net benefits (including potential economic, environmental, public health and safety, and other advantages; distributive impacts; and equity); (4) to the extent feasible, specify performance objectives, rather than specifying the behavior or manner of compliance that regulated entities must adopt; and (5) identify and assess available alternatives to direct regulation, including providing economic incentives to encourage the desired behavior, such as user fees or marketable permits, or providing information upon which choices can be made by the public. DOE emphasizes as well that E.O. 13563 requires agencies to use the best available techniques to quantify anticipated present and future benefits and costs as accurately as possible. In its guidance, the Office of Information and Regulatory Affairs (''OIRA'') in the Office of Management and Budget (''OMB'') has emphasized that such techniques may include identifying changing future compliance costs that might result from technological innovation or anticipated behavioral changes. For the reasons stated in the preamble, this proposed regulatory action is consistent with these principles.

Section 6(a) of E.O. 12866 also requires agencies to submit ''significant regulatory actions'' to OIRA for review. OIRA has determined that this proposed regulatory action does not constitute a ''significant regulatory action'' under section 3(f) of E.O. 12866. Accordingly, this action was not submitted to OIRA for review under E.O. 12866.

B. Review Under the Regulatory Flexibility Act

The Regulatory Flexibility Act (5 U.S.C. 601 *et seq.*) requires preparation of an initial regulatory flexibility analysis (''IRFA'') for any rule that by law must be proposed for public comment, unless the agency certifies that the rule, if promulgated, will not have a significant economic impact on a substantial number of small entities. As required by Executive Order 13272, ''Proper Consideration of Small Entities in Agency Rulemaking,'' 67 FR 53461 (Aug. 16, 2002), DOE published procedures and policies on February 19, 2003, to ensure that the potential impacts of its rules on small entities are properly considered during the DOE rulemaking process. 68 FR 7990. DOE has made its procedures and policies available on the Office of the General

[38] In response to the June 2021 RFI, interested parties commented in reference to NSF 7–2019. NSF 7–2021 was published after the June 2021 RFI comment period ended. DOE did not observe any changes from the 2019 to 2021 version that would impact the comments received or DOE's proposal to reference other industry standards rather than NSF 7–2019 or NSF 7–2021.

Counsel's website: *www.energy.gov/gc/office-general-counsel.*

DOE reviewed this proposed rule to amend the test procedures for CRE under the provisions of the Regulatory Flexibility Act and the policies and procedures published on February 19, 2003.

1. Description of Reasons Why Action Is Being Considered

DOE is proposing to amend the existing DOE test procedures for Commercial Refrigerators, Refrigerator-Freezers, and Freezers (''CRE''). EPCA, as amended,[39] requires that, at least once every 7 years, DOE evaluate test procedures for each type of covered equipment, including CRE, to determine whether amended test procedures would more accurately or fully comply with the requirements for the test procedures to not be unduly burdensome to conduct and be reasonably designed to produce test results that reflect energy efficiency, energy use, and estimated operating costs during a representative average use cycle. (42 U.S.C. 6314(a)(1)) DOE is publishing this NOPR in satisfaction of the 7-year review requirement specified in EPCA. (42 U.S.C. 6314(a)(1)(A)(ii))

2. Objectives of, and Legal Basis for, Rule

With respect to CRE, EPCA requires DOE to use the test procedure determined by the Secretary to be generally accepted industry standard, or industry standards developed or recognized by American Society of Heating, Refrigerating and Air-Conditioning Engineers (''ASHRAE'') or American National Standards Institute (''ANSI''), and the initial test procedures for self-contained CRE shall be the ASHRAE 117 test procedure that is in effect on January 1, 2005. (42 U.S.C. 6314(a)(6)(A)) Additionally, EPCA requires DOE to address whether to amend its test procedures if ASHRAE amends this standard. (42 U.S.C. 6314(a)(6)(E)–(F)) Finally, EPCA states if a test procedure other than the ASHRAE 117 test procedure is approved by ANSI, a review of the relative strengths and weaknesses of the new test procedure relative to the ASHRAE 117 test procedure and adopt one new test procedure for use in the standards program. (42 U.S.C. 6314(a)(6)(F)(i))[40]

EPCA also requires that, at least once every 7 years, DOE evaluate test procedures for each type of covered equipment, including CRE, to determine whether amended test procedures would more accurately or fully comply with the requirements for the test procedures to be reasonably designed to produce test results that reflect energy efficiency, energy use, and estimated operating costs during a representative average use cycle and not be unduly burdensome to conduct. (42 U.S.C. 6314(a)(1))

DOE is publishing this NOPR in satisfaction of the 7-year review requirement specified in EPCA. (42 U.S.C. 6314(a)(1)(A)(ii))

3. Description and Estimate of Small Entities Regulated

DOE uses the Small Business Administration (''SBA'') small business size standards to determine whether manufacturers qualify as ''small businesses,'' which are listed by the North American Industry Classification System (''NAICS'').[41] The SBA considers a business entity to be small business if, together with its affiliates, it employs less than a threshold number of workers specified in 13 CFR part 121.

CRE manufacturers, who produce the equipment covered by this proposed rule, are classified under NAICS code 333415, ''Air-conditioning and Warm Air Heating Equipment and Commercial and Industrial Refrigeration Equipment Manufacturing.'' The SBA sets a threshold of 1,250 employees or fewer for an entity to be considered a small business for this category. This employee threshold includes all employees in a business's parent company and any other subsidiaries.

DOE conducted a focused inquiry into manufacturers of equipment covered by this rulemaking. DOE accessed its Compliance Certification Database (''CCD''),[42] California Energy Commission's Modernized Appliance Efficiency Database System (''MAEDbS''),[43] and other public sources, including manufacturer websites, to create a list of companies that produce, manufacture, import, or private label the CRE covered by this rulemaking. DOE then consulted other publicly available data, such as manufacturer specifications and product literature, import/export logs (*e.g.,* bills of lading from Panjiva[44]), and basic model numbers, to identify original equipment manufacturers (''OEMs'') of the equipment covered by this rulemaking. DOE further relied on public sources and subscription-based market research tools (*e.g.,* Dun & Bradstreet reports[45]) to determine company location, headcount, and annual revenue. DOE screened out companies that do not offer equipment covered by this proposed rulemaking, do not meet the SBA's definition of a ''small business,'' or are foreign-owned and operated.

DOE initially identified 85 OEMs of CRE for the U.S. market. Of the 85 OEMs identified, DOE estimates that 30 qualify as small OEMs and are not foreign-owned and operated.

4. Description and Estimate of Compliance Requirements

In this NOPR, DOE proposes to amend the existing test procedure for CRE to:

(1) Establish new definitions for high-temperature refrigerator, medium-temperature refrigerator, low-temperature freezer, and amend the definition for ice-cream freezer.

(2) Incorporate by reference the most current versions of industry standards AHRI 1200, ASHRAE 72, and AHRI 1320–2011.

(3) Establish definitions and test procedures for buffet tables and preparation tables.

(4) Establish definitions and test procedures for blast chillers and blast freezers.

(5) Amend the definition for chef base or griddle stand.

(6) Specify alternate conditions for alternative refrigerants.

(7) Allow for certification of compartment volumes based on computer aided design (''CAD'') models.

(8) Incorporate provisions for defrosts and customer order storage cabinets currently specified in waivers and interim waivers.

(9) Adopt product-specific enforcement provisions.

(10) Clarify use of the lowest application product temperature (''LAPT'') provisions.

(11) Remove the obsolete test procedure in appendix A.

(12) Specify a sampling plan for volume and total display area (''TDA'').

DOE has tentatively determined that the proposed amendments to the test procedure for CRE currently subject to

[39] All references to EPCA in this document refer to the statute as amended through Energy Act of 2020, Public Law 116–260 (Dec. 27, 2020).

[40] In 2005, ASHRAE combined Standard 72–1998, ''Method of Testing Open Refrigerators,'' and Standard 117–2002 and published the test method as ASHRAE Standard 72–2005, ''Method of Testing Commercial Refrigerators and Freezers,'' which was approved by ANSI on July 29, 2005.

[41] Available at: *www.sba.gov/document/support-table-size-standards.*

[42] DOE's CCD is available at *www.regulations.doe.gov/certification-data* (Last accessed January 26, 2022).

[43] California Energy Commission's MAEDbS is available at *cacertappliances.energy.ca.gov/Pages/Search/AdvancedSearch.aspx* (Last accessed January 26, 2022).

[44] Panjiva Supply Chain Intelligence is available at: *panjiva.com/import-export/United-States.*

[45] The Dun & Bradstreet Hoovers subscription login is available online at *app.dnbhoovers.com/.*

testing would not increase third-party lab testing costs per unit relative to the current DOE test procedure, which DOE estimates to be $5,000. Furthermore, DOE has tentatively concluded that manufacturers would be able to rely on data generated under the current test procedure should any of these additional proposed amendments be finalized. Accordingly, DOE does not expect that manufacturers would be required to re-test or re-certify existing CRE models as a result of the proposals in this NOPR.

For the proposed new test procedures for additional categories of CRE not currently subject to testing according to the DOE test procedure (*i.e.,* buffet tables or preparation tables, blast chillers, or blast freezers), testing would not be required (other than making voluntary representations of energy consumption) until the compliance date of any energy conservation standards for equipment in these categories. DOE has initially determined that $5,000 is a representative per-unit test cost for blast chillers, blast freezers and buffet and preparation tables. Based on a review of commercially available blast chillers and blast freezers, DOE has determined that manufacturers make no claims regarding the energy consumption of their models. To the extent that buffet table and preparation table manufacturers make claims regarding the energy consumption of their models, DOE observed that they do so in accordance with the California Code of Regulations. The manufacturers currently making representations of the energy consumption of buffet tables and preparation tables would be required to test according to the proposed test procedure beginning 360 days after the final rule, should DOE finalize the proposal.

DOE reviewed California Energy Commission's MAEDbS and identified two small domestic OEMs currently making representations of the energy consumption of buffet table or preparation table models. According to MAEDbS, one small OEM makes claims regarding the energy consumption of 26 buffet table or preparation table models and the other small OEM makes claims regarding the energy consumption of 20 buffet table or preparation table models. Based on Dun & Bradstreet reports, both small OEMs have an estimated annual revenue of over $100 million. As previously discussed, DOE estimates a per-unit test cost of $5,000. Therefore, DOE estimates that the potential costs associated with re-testing would be minimal, accounting for approximately 0.1 percent of annual revenue for both small businesses.

DOE does not anticipate that the proposed test procedure amendments would result in increased testing costs for the vast majority of manufacturers, including small manufacturers. DOE estimates that two small businesses may incur some re-testing costs associated with their buffet table and preparation table models, should DOE adopt the proposed rule. However, DOE's research indicates these costs would account for approximately 0.1 percent of annual revenue for both small OEMs identified. Therefore, DOE tentatively concludes that the proposed rule would not have a significant impact on a substantial number of small entities.

DOE requests comment on its initial conclusion that the amendments detailed in this NOPR would not have a significant impact on a substantial number of small entities.

5. Identification of Duplication, Overlap, and Conflict With Other Rules and Regulations

DOE is not aware of any rules or regulations that duplicate, overlap, or conflict with the rule being considered in this action.

6. A Description of Significant Alternatives to the Rule

DOE does not expect that the proposals detailed in this NOPR will increase the test burden on manufacturers, including small businesses. Under EPCA, DOE is required to adopt generally accepted industry test standards, or industry test standards developed or recognized by the American Society of Heating, Refrigerating, and Air-Conditioning Engineers (''ASHRAE'') or American National Standards Institute (''ANSI''). (42 U.S.C. 6314(a)(6)(A)(i)) It is also DOE's established practice to adopt relevant industry standards as DOE test procedures unless such methodology would be unduly burdensome to conduct or would not produce test results that reflect the energy efficiency, energy use, water use (as specified in EPCA) or estimated operating costs of that product during a representative average use cycle. 10 CFR 431.4; Section 8(c) of appendix A 10 CFR part 430 subpart C. DOE examined relevant industry test standards, and the Department incorporated these standards in the proposed test procedures whenever appropriate to reduce test burden to manufacturers. Specifically, this NOPR incorporates by reference the most current versions of industry standards AHRI 1200, ASHRAE 72, and AHRI 1320–2011.

Additionally, manufacturers subject to DOE's energy efficiency standards may apply to DOE's Office of Hearings and Appeals for exception relief under certain circumstances. Manufacturers should refer to 10 CFR part 1003 for additional details.

C. Review Under the Paperwork Reduction Act of 1995

Manufacturers of CRE must certify to DOE that their products comply with any applicable energy conservation standards. To certify compliance, manufacturers must first obtain test data for their products according to the DOE test procedures, including any amendments adopted for those test procedures. DOE has established regulations for the certification and recordkeeping requirements for all covered consumer products and commercial equipment, including CRE. (*See generally* 10 CFR part 429.) The collection-of-information requirement for the certification and recordkeeping is subject to review and approval by OMB under the Paperwork Reduction Act (''PRA''). This requirement has been approved by OMB under OMB control number 1910–1400. Public reporting burden for the certification is estimated to average 35 hours per response, including the time for reviewing instructions, searching existing data sources, gathering and maintaining the data needed, and completing and reviewing the collection of information.

DOE is not proposing to amend the certification or reporting requirements for CRE in this NOPR. Further, certification data will be required for buffet tables and preparation tables, and blast chillers and blast freezers; however, DOE is not proposing certification or reporting requirements for these categories of CRE in this NOPR. Instead, DOE may consider proposals to establish certification requirements and reporting for these equipment categories under a separate rulemaking regarding appliance and equipment certification. DOE will address changes to OMB Control Number 1910–1400 at that time, as necessary.

Notwithstanding any other provision of the law, no person is required to respond to, nor shall any person be subject to a penalty for failure to comply with, a collection of information subject to the requirements of the PRA, unless that collection of information displays a currently valid OMB Control Number.

D. Review Under the National Environmental Policy Act of 1969

In this NOPR, DOE proposes test procedure amendments that it expects will be used to develop and implement future energy conservation standards for

CRE. DOE has determined that this rule falls into a class of actions that are categorically excluded from review under the National Environmental Policy Act of 1969 (42 U.S.C. 4321 *et seq.*) and DOE's implementing regulations at 10 CFR part 1021. Specifically, DOE has determined that adopting test procedures for measuring energy efficiency of consumer products and industrial equipment is consistent with activities identified in 10 CFR part 1021, appendix A to subpart D, A5 and A6. Accordingly, neither an environmental assessment nor an environmental impact statement is required.

E. Review Under Executive Order 13132

Executive Order 13132, ''Federalism,'' 64 FR 43255 (Aug. 4, 1999) imposes certain requirements on agencies formulating and implementing policies or regulations that preempt State law or that have federalism implications. The Executive order requires agencies to examine the constitutional and statutory authority supporting any action that would limit the policymaking discretion of the States and to carefully assess the necessity for such actions. The Executive order also requires agencies to have an accountable process to ensure meaningful and timely input by State and local officials in the development of regulatory policies that have federalism implications. On March 14, 2000, DOE published a statement of policy describing the intergovernmental consultation process it will follow in the development of such regulations. 65 FR 13735. DOE has examined this proposed rule and has determined that it would not have a substantial direct effect on the States, on the relationship between the national government and the States, or on the distribution of power and responsibilities among the various levels of government. EPCA governs and prescribes Federal preemption of State regulations as to energy conservation for the products that are the subject of this proposed rule. States can petition DOE for exemption from such preemption to the extent, and based on criteria, set forth in EPCA. (42 U.S.C. 6297(d)) No further action is required by Executive Order 13132.

F. Review Under Executive Order 12988

Regarding the review of existing regulations and the promulgation of new regulations, section 3(a) of Executive Order 12988, ''Civil Justice Reform,'' 61 FR 4729 (Feb. 7, 1996), imposes on Federal agencies the general duty to adhere to the following requirements: (1) eliminate drafting errors and ambiguity, (2) write regulations to minimize litigation, (3) provide a clear legal standard for affected conduct rather than a general standard, and (4) promote simplification and burden reduction. Section 3(b) of Executive Order 12988 specifically requires that executive agencies make every reasonable effort to ensure that the regulation (1) clearly specifies the preemptive effect, if any, (2) clearly specifies any effect on existing Federal law or regulation, (3) provides a clear legal standard for affected conduct while promoting simplification and burden reduction, (4) specifies the retroactive effect, if any, (5) adequately defines key terms, and (6) addresses other important issues affecting clarity and general draftsmanship under any guidelines issued by the Attorney General. Section 3(c) of Executive Order 12988 requires executive agencies to review regulations in light of applicable standards in sections 3(a) and 3(b) to determine whether they are met or it is unreasonable to meet one or more of them. DOE has completed the required review and determined that, to the extent permitted by law, the proposed rule meets the relevant standards of Executive Order 12988.

G. Review Under the Unfunded Mandates Reform Act of 1995

Title II of the Unfunded Mandates Reform Act of 1995 (''UMRA'') requires each Federal agency to assess the effects of Federal regulatory actions on State, local, and Tribal governments and the private sector. Public Law 104–4, sec. 201 (codified at 2 U.S.C. 1531). For a proposed regulatory action likely to result in a rule that may cause the expenditure by State, local, and Tribal governments, in the aggregate, or by the private sector of $100 million or more in any one year (adjusted annually for inflation), section 202 of UMRA requires a Federal agency to publish a written statement that estimates the resulting costs, benefits, and other effects on the national economy. (2 U.S.C. 1532(a), (b)) The UMRA also requires a Federal agency to develop an effective process to permit timely input by elected officers of State, local, and Tribal governments on a proposed ''significant intergovernmental mandate,'' and requires an agency plan for giving notice and opportunity for timely input to potentially affected small governments before establishing any requirements that might significantly or uniquely affect small governments. On March 18, 1997, DOE published a statement of policy on its process for intergovernmental consultation under UMRA. 62 FR 12820; also available at *www.energy.gov/gc/office-general-counsel.* DOE examined this proposed rule according to UMRA and its statement of policy and determined that the rule contains neither an intergovernmental mandate, nor a mandate that may result in the expenditure of $100 million or more in any year, so these requirements do not apply.

H. Review Under the Treasury and General Government Appropriations Act, 1999

Section 654 of the Treasury and General Government Appropriations Act, 1999 (Pub. L. 105–277) requires Federal agencies to issue a Family Policymaking Assessment for any rule that may affect family well-being. This proposed rule would not have any impact on the autonomy or integrity of the family as an institution. Accordingly, DOE has concluded that it is not necessary to prepare a Family Policymaking Assessment.

I. Review Under Executive Order 12630

DOE has determined, under Executive Order 12630, ''Governmental Actions and Interference with Constitutionally Protected Property Rights'' 53 FR 8859 (March 18, 1988), that this proposed regulation would not result in any takings that might require compensation under the Fifth Amendment to the U.S. Constitution.

J. Review Under Treasury and General Government Appropriations Act, 2001

Section 515 of the Treasury and General Government Appropriations Act, 2001 (44 U.S.C. 3516 note) provides for agencies to review most disseminations of information to the public under guidelines established by each agency pursuant to general guidelines issued by OMB. OMB's guidelines were published at 67 FR 8452 (Feb. 22, 2002), and DOE's guidelines were published at 67 FR 62446 (Oct. 7, 2002). Pursuant to OMB Memorandum M–19–15, Improving Implementation of the Information Quality Act (April 24, 2019), DOE published updated guidelines which are available at *www.energy.gov/sites/prod/files/2019/12/f70/DOE%20Final%20Updated%20IQA%20Guidelines%20Dec%202019.pdf.* DOE has reviewed this proposed rule under the OMB and DOE guidelines and has concluded that it is consistent with applicable policies in those guidelines.

K. Review Under Executive Order 13211

Executive Order 13211, ''Actions Concerning Regulations That Significantly Affect Energy Supply, Distribution, or Use,'' 66 FR 28355 (May

22, 2001), requires Federal agencies to prepare and submit to OMB, a Statement of Energy Effects for any proposed significant energy action. A ''significant energy action'' is defined as any action by an agency that promulgated or is expected to lead to promulgation of a final rule, and that (1) is a significant regulatory action under Executive Order 12866, or any successor order; and (2) is likely to have a significant adverse effect on the supply, distribution, or use of energy; or (3) is designated by the Administrator of OIRA as a significant energy action. For any proposed significant energy action, the agency must give a detailed statement of any adverse effects on energy supply, distribution, or use should the proposal be implemented, and of reasonable alternatives to the action and their expected benefits on energy supply, distribution, and use.

The proposed regulatory action to amend the test procedure for measuring the energy efficiency of CRE is not a significant regulatory action under Executive Order 12866. Moreover, it would not have a significant adverse effect on the supply, distribution, or use of energy, nor has it been designated as a significant energy action by the Administrator of OIRA. Therefore, it is not a significant energy action, and, accordingly, DOE has not prepared a Statement of Energy Effects.

L. Review Under Section 32 of the Federal Energy Administration Act of 1974

Under section 301 of the Department of Energy Organization Act (Pub. L. 95–91; 42 U.S.C. 7101), DOE must comply with section 32 of the Federal Energy Administration Act of 1974, as amended by the Federal Energy Administration Authorization Act of 1977. (15 U.S.C. 788; ''FEAA'') Section 32 essentially provides in relevant part that, where a proposed rule authorizes or requires use of commercial standards, the notice of proposed rulemaking must inform the public of the use and background of such standards. In addition, section 32(c) requires DOE to consult with the Attorney General and the Chairman of the Federal Trade Commission (''FTC'') concerning the impact of the commercial or industry standards on competition.

The proposed modifications to the test procedure for CRE would incorporate testing methods contained in certain sections of the following commercial standards: AHRI 1200–202X, AHRI 1320–2011, ASHRAE 72–2018R, and ASTM F2143–16. DOE has evaluated these standards and is unable to conclude whether they fully comply with the requirements of section 32(b) of the FEAA (*i.e.,* whether it was developed in a manner that fully provides for public participation, comment, and review.) DOE will consult with both the Attorney General and the Chairman of the FTC concerning the impact of these test procedures on competition, prior to prescribing a final rule.

M. Description of Materials Incorporated by Reference

In this NOPR, DOE proposes to incorporate by reference the test standard published by AHRI titled ''Performance Rating of Commercial Refrigerated Display Merchandisers and Storage Cabinets.'' AHRI 1200–202X is an industry-accepted test procedure that provides rating instructs, calculations, and methods for CRE. The test procedure proposed in this NOPR references AHRI 1200–202X for specific rating instructions, calculations, and rating methods for CRE. AHRI 1200–202X is a draft version of standard AHRI 1200 that has not reached final publication, but the version discussed in this NOPR is available at *www.regulations.gov/docket/EERE-2017-BT-TP-0008.*

DOE also proposes to incorporate by reference the test standard published by AHRI titled ''Performance Rating of Commercial Refrigerated Display Merchandisers and Storage Cabinets for Use With Secondary Refrigerants.'' AHRI 1320–2011 is an industry-accepted test procedure that provides rating instructs, calculations, and methods for CRE used with secondary coolants. The test procedure proposed in this NOPR references AHRI 1320–2011 regarding specific provisions regarding secondary coolants, but otherwise references AHRI 1200–202X as discussed. AHRI 1320–2011 is available at *ahri.net.org/search-standards.*

DOE also proposes to incorporate by reference the test standard published by ASHRAE titled ''Method of Testing Open and Closed Commercial Refrigerators and Freezers.'' ASHRAE 72–2018R is an industry-accepted test procedure that provides setup, instrumentation, measurement, and test conduct instructions for testing CRE. The test procedure proposed in this NOPR references ASHRAE 72–2018R as the basis for test setup and test conduct requirements. ASHRAE 72–2018R is a draft version of the standard that has not reached final publication, but the version discussed in this NOPR is available at *www.regulations.gov/docket/EERE-2017-BT-TP-0008.*

DOE also proposes to incorporate by reference the test standard published by ASTM titled ''Standard Test Method for Performance of Refrigerated Buffet and Preparation Tables.'' ASTM F2143–16 is an industry-accepted test procedure that provides setup, instrumentation, conditions, measurement, and test conduct instructions for testing buffet tables and preparation tables. The test procedure proposed in this NOPR references ASTM F2143–16 as the basis for test setup and test conduct for buffet tables and preparation tables. Copies of ASTM F2143–16 can be purchased at *www.astm.org/f2143-16.html.*

ASTM E1084–86 (Reapproved 2009), which appears in the proposed regulatory text, has already been incorporated by reference for that text; no change is proposed.

V. Public Participation

A. Participation in the Webinar

The time and date for the webinar meeting are listed in the **DATES** section at the beginning of this document. Webinar registration information, participant instructions, and information about the capabilities available to webinar participants will be published at *www.regulations.gov/docket/EERE-2017-BT-TP-0008.* Participants are responsible for ensuring their systems are compatible with the webinar software.

B. Procedure for Submitting Prepared General Statements for Distribution

Any person who has an interest in the topics addressed in this notice, or who is representative of a group or class of persons that has an interest in these issues, may request an opportunity to make an oral presentation at the webinar. Such persons may submit to *ApplianceStandardsQuestions@ee.doe.gov.* Persons who wish to speak should include with their request a computer file in WordPerfect, Microsoft Word, PDF, or text (ASCII) file format that briefly describes the nature of their interest in this proposed rulemaking and the topics they wish to discuss. Such persons should also provide a daytime telephone number where they can be reached.

C. Conduct of the Webinar

DOE will designate a DOE official to preside at the webinar and may also use a professional facilitator to aid discussion. The meeting will not be a judicial or evidentiary-type public hearing, but DOE will conduct it in accordance with section 336 of EPCA (42 U.S.C. 6306). A court reporter will be present to record the proceedings and

prepare a transcript. DOE reserves the right to schedule the order of presentations and to establish the procedures governing the conduct of the webinar. There shall not be discussion of proprietary information, costs or prices, market share, or other commercial matters regulated by U.S. anti-trust laws. After the webinar and until the end of the comment period, interested parties may submit further comments on the proceedings and any aspect of the proposed rulemaking.

The webinar will be conducted in an informal, conference style. DOE will present a general overview of the topics addressed in this proposed rulemaking, allow time for prepared general statements by participants, and encourage all interested parties to share their views on issues affecting this rulemaking. Each participant will be allowed to make a general statement (within time limits determined by DOE), before the discussion of specific topics. DOE will permit, as time permits, other participants to comment briefly on any general statements.

At the end of all prepared statements on a topic, DOE will permit participants to clarify their statements briefly. Participants should be prepared to answer questions by DOE and by other participants concerning these issues. DOE representatives may also ask questions of participants concerning other matters relevant to this proposed rulemaking. The official conducting the webinar/public meeting will accept additional comments or questions from those attending, as time permits. The presiding official will announce any further procedural rules or modification of the above procedures that may be needed for the proper conduct of the webinar.

A transcript of the webinar will be included in the docket, which can be viewed as described in the docket section at the beginning of this proposed rulemaking. In addition, any person may buy a copy of the transcript from the transcribing reporter.

D. Submission of Comments

DOE will accept comments, data, and information regarding this proposed rule no later than the date provided in the **DATES** section at the beginning of this proposed rule.[46] Interested parties may submit comments using any of the methods described in the **ADDRESSES** section at the beginning of this document.

Submitting comments via www.regulations.gov. The *www.regulations.gov* web page will require you to provide your name and contact information. Your contact information will be viewable to DOE Building Technologies staff only. Your contact information will not be publicly viewable except for your first and last names, organization name (if any), and submitter representative name (if any). If your comment is not processed properly because of technical difficulties, DOE will use this information to contact you. If DOE cannot read your comment due to technical difficulties and cannot contact you for clarification, DOE may not be able to consider your comment.

However, your contact information will be publicly viewable if you include it in the comment or in any documents attached to your comment. Any information that you do not want to be publicly viewable should not be included in your comment, nor in any document attached to your comment. Persons viewing comments will see only first and last names, organization names, correspondence containing comments, and any documents submitted with the comments.

Do not submit to *www.regulations.gov* information for which disclosure is restricted by statute, such as trade secrets and commercial or financial information (hereinafter referred to as Confidential Business Information (''CBI'')). Comments submitted through *www.regulations.gov* cannot be claimed as CBI. Comments received through the website will waive any CBI claims for the information submitted. For information on submitting CBI, see the Confidential Business Information section.

DOE processes submissions made through *www.regulations.gov* before posting. Normally, comments will be posted within a few days of being submitted. However, if large volumes of comments are being processed simultaneously, your comment may not be viewable for up to several weeks. Please keep the comment tracking number that *www.regulations.gov* provides after you have successfully uploaded your comment.

Submitting comments via email. Comments and documents submitted via email also will be posted to *www.regulations.gov.* If you do not want your personal contact information to be publicly viewable, do not include it in your comment or any accompanying documents. Instead, provide your contact information on a cover letter. Include your first and last names, email address, telephone number, and optional mailing address. The cover letter will not be publicly viewable as long as it does not include any comments

Include contact information each time you submit comments, data, documents, and other information to DOE. No faxes will be accepted.

Comments, data, and other information submitted to DOE electronically should be provided in PDF (preferred), Microsoft Word or Excel, WordPerfect, or text (ASCII) file format. Provide documents that are not secured, written in English and free of any defects or viruses. Documents should not contain special characters or any form of encryption and, if possible, they should carry the electronic signature of the author.

Campaign form letters. Please submit campaign form letters by the originating organization in batches of between 50 to 500 form letters per PDF or as one form letter with a list of supporters' names compiled into one or more PDFs. This reduces comment processing and posting time.

Confidential Business Information. Pursuant to 10 CFR 1004.11, any person submitting information that he or she believes to be confidential and exempt by law from public disclosure should submit via email two well-marked copies: one copy of the document marked confidential including all the information believed to be confidential, and one copy of the document marked non-confidential with the information believed to be confidential deleted. DOE will make its own determination about the confidential status of the information and treat it according to its determination.

It is DOE's policy that all comments may be included in the public docket, without change and as received, including any personal information provided in the comments (except

[46] DOE has historically provided a 75-day comment period for test procedure NOPRs pursuant to the North American Free Trade Agreement, U.S.-Canada-Mexico (''NAFTA''), Dec. 17, 1992, 32 I.L.M. 289 (1993); the North American Free Trade Agreement Implementation Act, Public Law 103–182, 107 Stat. 2057 (1993) (codified as amended at 10 U.S.C.A. 2576) (1993) (''NAFTA Implementation Act''); and Executive Order 12889, ''Implementation of the North American Free Trade Agreement,'' 58 FR 69681 (Dec. 30, 1993). However, on July 1, 2020, the Agreement between the United States of America, the United Mexican States, and the United Canadian States (''USMCA''), Nov. 30, 2018, 134 Stat. 11 (*i.e.,* the successor to NAFTA), went into effect, and Congress's action in replacing NAFTA through the USMCA Implementation Act, 19 U.S.C. 4501 *et seq.* (2020), implies the repeal of E.O. 12889 and its 75-day comment period requirement for technical regulations. Thus, the controlling laws are EPCA and the USMCA Implementation Act. Consistent with EPCA's public comment period requirements for consumer products, the USMCA only requires a minimum comment period of 60 days. Consequently, DOE now provides a 60-day public comment period for test procedure NOPRs.

information deemed to be exempt from public disclosure).

E. Issues on Which DOE Seeks Comment

Although DOE welcomes comments on any aspect of this proposal, DOE is particularly interested in receiving comments and views of interested parties concerning the following issues:

(1) DOE requests comment on the proposed amended definition of ice-cream freezer, and on whether any additional characteristics may better differentiate this equipment from other commercial freezers.

(2) DOE requests comment on the proposed amended definition for ice-cream freezer and the proposed definition for low-temperature freezer.

(3) DOE requests comment on the proposed definitions for high-temperature refrigerator and medium-temperature refrigerator, including whether the terms should be mutually exclusive or constructed such that equipment could be considered to meet both definitions.

(4) DOE requests comment on the proposal to specify the requirements from the April 2014 Final Rule regarding basic models of CRE that operate in multiple equipment classes.

(5) DOE requests comment on the proposal to incorporate by reference AHRI 1200–202X and on whether the use of the updated test method would impact CRE ratings based on the current DOE test procedure.

(6) DOE requests comment on the proposal to incorporate by reference AHRI 1200–202X, including the new provisions regarding high glide refrigerants. DOE also requests information on whether any remote condensing CRE are currently tested and rated using high glide refrigerants and whether the proposed test procedure would impact the rated energy consumption for such models.

(7) DOE requests comment on the proposal to adopt a rating point of 55 °F ± 2.0 °F for high-temperature refrigerators by adopting through reference certain provisions of AHRI 1200–202X.

(8) DOE requests comment on its proposal to incorporate by reference ASHRAE 72–2018R, including on whether the updates included in the industry test standard would impact the measured energy consumption of any CRE currently available.

(9) DOE requests comment on the proposed additional instructions regarding loading drawers. DOE requests information on whether the proposed approach is consistent with any future industry standard revisions to address this issue. DOE requests comment on whether other instructions for CRE with drawers should be revised (*e.g.,* fully open definition for drawers) or if additional instructions are needed.

(10) DOE requests comment on the proposal to incorporate by reference AHRI 1320–2011 for CRE used with secondary coolants, including the proposal to only reference the industry standard for provisions specific to secondary coolants and to otherwise reference AHRI 1200–202X, as proposed for other CRE.

(11) DOE requests comment on the model regulation guidelines and on whether there are opportunities for DOE to harmonize its regulations with other regulations in place for CRE.

(12) DOE requests comment on the proposed definition for buffet table or preparation table. DOE requests information on whether any additional definitions are necessary for the purposes of testing this equipment, or whether any additional equipment characteristics are necessary to differentiate this equipment from other categories of CRE.

(13) DOE requests comment on its proposal to adopt through reference certain provisions of ASTM F2143–16 as the basis for testing buffet tables and preparation tables. DOE also seeks comment on the proposal to specify test procedures only for self-contained buffet tables and preparation tables, consistent with ASTM F2143–16.

(14) DOE requests comment on the proposal for testing buffet tables and preparation tables with test conditions (*i.e.,* test chamber conditions, measurement location, and electric supply conditions) consistent with ASHRAE 72–2018R, with additional detail specific to buffet tables and preparation tables.

(15) DOE requests comment on the proposal for testing buffet tables and preparation tables with test setup instructions consistent with ASHRAE 72–2018R rather than ASTM F2143–16.

(16) DOE requests comment on the proposed test loads and temperature measurement locations for buffet tables and preparation tables—*i.e.,* distilled water in pans for the open-top refrigerated area and no load in any refrigerated compartment—consistent with the approach in ASTM F2143–16.

(17) DOE requests comment on the proposal to account for defrosts when testing buffet tables and preparation tables, consistent with the approach in ASHRAE 72–2018R.

(18) DOE requests comment on its proposal to require loading pans in the open-top refrigerated area and not moving them to a refrigerated compartment, if applicable, during testing.

(19) DOE requests comment on the proposed 24-hour test period, which is consistent with the approach in ASTM F2143–16.

(20) DOE requests comment on the proposed door and cover opening procedures, which are consistent with the approach specified in ASTM F2143–16. DOE requests data and information on representative usage of buffet tables and preparation tables, including door and cover openings.

(21) DOE requests comment on the proposed stabilization approach for buffet table and preparation table testing, which would reference the approach specified in ASHRAE 72–2018R.

(22) DOE requests comment on the proposed approach for testing buffet tables and preparation tables based on separate pan and compartment average temperatures. DOE also requests feedback on the proposed target temperature of 38 °F ± 2 °F for each average temperature.

(23) DOE requests comment on the proposed capacity metrics of pan storage volume, compartment volume, and pan display area. DOE requests feedback on the proposed methods for measuring each and the extent to which these metrics are relevant capacity metrics for buffet tables and preparation tables.

(24) DOE requests comment on the proposed product-specific enforcement provisions regarding how DOE would determine whether a model meets the pull-down temperature application definition. DOE also requests data and comment on whether the proposed product-specific enforcement provisions sufficiently differentiate pull-down temperature applications from holding temperature applications.

(25) DOE seeks comment on the proposed definitions of ''blast chiller'' and ''blast freezer.''

(26) DOE seeks comment on the proposal to establish test procedures for self-contained commercial blast chillers and blast freezers that have a refrigerated volume of up to 500 ft3.

(27) DOE seeks comment on the proposal to incorporate certain provisions from the draft ASHRAE 220 and certain deviations for the blast chillers and blast freezers test procedures.

(28) DOE seeks comment on the proposal to reference section 4 and the relevant portions of Appendix A of ASHRAE 72–2018R for instrumentation requirements for the blast chiller and blast freezer test procedures.

(29) DOE seeks comment on the proposal to require the dry-bulb temperatures specified in the tentative ASHRAE 220 draft and incorporate section 6.1 and Figure 6 of ASHRAE 72–2018R to specify the point TA where the dry-bulb temperatures are to be measured and the type of thermocouple to use when measuring dry-bulb in the blast chillers and blast freezers test procedures.

(30) DOE seeks comment on the proposal to incorporate the portions of Appendix A in ASHRAE 72–2018R which specify the requirements for voltage and frequency in the blast chillers and blast freezers test procedures.

(31) DOE seeks comment on whether any additional test conditions are appropriate for blast chiller and blast freezer testing, including those specified in Sections 6.2, 6.3, and Appendix A in ASHRAE 72–2018R.

(32) DOE seeks comment on the proposal to incorporate Sections 5.1, 5.2, 5.3 (including sub-sections 5.3.1 to 5.3.17), and the relevant portions of Appendix A of ASHRAE 72–2018R, with the proposed deviations, for the blast chillers and blast freezers test procedures.

(33) DOE seeks comment on the proposal to incorporate the relevant portions of Appendix A of ASHRAE 72–2018R for the electrical measurement locations for the blast chillers and blast freezers test procedures.

(34) DOE seeks comment on the proposal to reference AHRI 1200–202X for measuring the refrigerated volume of blast chillers and blast freezers.

(35) DOE seeks comment on the proposal to incorporate the standard product pan specifications in ASHRAE 220 for the blast chillers and blast freezers test procedures.

(36) DOE seeks comment on the proposed method to determine the number of pans required for testing blast chillers and blast freezers.

(37) DOE seeks comment on the proposal to determine the tested product capacity for the blast chillers and blast freezers test procedures.

(38) DOE seeks comment on the proposed method for distributing the pans within the test unit's cabinet for testing blast chillers and blast freezers.

(39) DOE seeks comment on the proposed method to determine which standard product pans would include temperature measurement sensors for the blast chillers and blast freezers test procedures.

(40) DOE seeks comment on the proposed method of measuring the product temperature in the measured pans for the blast chillers and blast freezers test procedures.

(41) DOE seeks comment on the proposed method for preparing the product medium mixture to be placed in the standard product pans for the blast chillers and blast freezers test procedures.

(42) DOE seeks comment on the proposal to include pre-cooling and pull-down operating in the blast chiller and blast freezer test procedure and to not include any holding periods during testing.

(43) DOE seeks comment on the proposed data recording rate for the blast chillers and blast freezers test procedures.

(44) DOE seeks comment on the proposed data collection periods for the blast chillers and blast freezers test procedures.

(45) DOE seeks comment on the proposed method to conduct the pre-cool cycle for the blast chillers and blast freezers test procedures.

(46) DOE seeks comment on the proposed method to load the prepared standard product pans into the test unit for the blast chillers and blast freezers test procedures.

(47) DOE seeks comment on the proposed method to conduct the blast chilling or blast freezing test.

(48) DOE requests comment on the proposed amendment to the definition for chef base or griddle stand, which specifies a maximum height of 32 inches for this equipment. DOE requests information on any other identifiable equipment characteristics that may differentiate chef bases and griddle stands from other similar CRE.

(49) DOE requests comment on its proposal to test chef bases and griddle stands according to the test procedure used for other CRE.

(50) DOE requests comment on the proposed definition for mobile refrigerated cabinet. DOE also requests comment on the proposal to not establish test procedures for mobile refrigerated cabinets.

(51) DOE requests comment on its tentative determination to not propose amended test procedures for dedicated remote condensing units.

(52) DOE requests comment on the proposed approach to account for long duration defrost cycles using an optional two-part test procedure consistent with the existing waiver approach granted for such models. DOE also requests comment on whether any additional provisions are necessary to account for different defrost operation or controls, and on DOE's proposed approach in which the test period would start with the defrost occurrence having the longest interval between defrosts.

(53) DOE requests comment on the proposed alternate refrigerant conditions to be used for testing remote CRE with CO2 refrigerant. DOE requests comment on whether any other aspects of the current test procedure require amendment to allow for testing with CO2 or any other alternative refrigerants.

(54) DOE requests comment on the proposed definition and term ''customer order storage cabinet'' to describe the equipment currently addressed in the September 2018 Waiver and the July 2021 Interim Waiver. DOE requests comment on the proposal to test such equipment with reduced door openings, consistent with the waiver and interim waiver approach.

(55) DOE requests comment on the additional proposed test procedure amendments that would allow for reverse heat leak testing of customer order storage cabinets with floating suction pressures for multiple different temperature compartments.

(56) DOE requests comment on the proposed product-specific enforcement provisions for CRE.

(57) DOE seeks comment on the proposed sampling plan for CRE volume and TDA.

(58) DOE requests comment on its initial conclusion that the amendments detailed in this NOPR would not have a significant impact on a substantial number of small entities.

VI. Approval of the Office of the Secretary

The Secretary of Energy has approved publication of this proposed rule.

List of Subjects

10 CFR Part 429

Administrative practice and procedure, Confidential business information, Energy conservation, Household appliances, Imports, Intergovernmental relations, Reporting and recordkeeping requirements, Small businesses.

10 CFR Part 431

Administrative practice and procedure, Confidential business information, Energy conservation test procedures, Incorporation by reference, and Reporting and recordkeeping requirements.

Signing Authority

This document of the Department of Energy was signed on June 15, 2022, by Kelly J. Speakes-Backman, Principal Deputy Assistant Secretary for Energy Efficiency and Renewable Energy,

pursuant to delegated authority from the Secretary of Energy. That document with the original signature and date is maintained by DOE. For administrative purposes only, and in compliance with requirements of the Office of the Federal Register, the undersigned DOE Federal Register Liaison Officer has been authorized to sign and submit the document in electronic format for publication, as an official document of the Department of Energy. This administrative process in no way alters the legal effect of this document upon publication in the **Federal Register**.

Signed in Washington, DC, on June 15, 2022.

Treena V. Garrett,

Federal Register Liaison Officer, U.S. Department of Energy.

For the reasons stated in the preamble, DOE is proposing to amend parts 429 and 431 of Chapter II of Title 10, Code of Federal Regulations as set forth below:

PART 429—CERTIFICATION, COMPLIANCE, AND ENFORCEMENT FOR CONSUMER PRODUCTS AND COMMERCIAL AND INDUSTRIAL EQUIPMENT

■ 1. The authority citation for part 429 continues to read as follows:

Authority: 42 U.S.C. 6291–6317; 28 U.S.C. 2461 note.

■ 2. Section 429.42 is amended by adding paragraphs (a)(3) and (4) to read as follows:

§ 429.42 Commercial refrigerators, freezers, and refrigerator-freezers.

(a) * * *

(3) *Represented value calculations.* The volume and total display area (TDA) of a basic model, as applicable, is the mean of the measured volumes and the mean of the measured TDAs, as applicable, for the tested units of the basic model, based on the same tests used to determine energy consumption.

(4) *Convertible equipment.* Each basic model of commercial refrigerator, freezer, or refrigerator-freezer that is capable of operating at integrated average temperatures that span the operating temperature range of multiple equipment classes, either by adjusting a thermostat for a basic model or by the marketed, designed, or intended operation for a basic model with a remote condensing unit but without a thermostat, must determine the represented values, which includes the certified ratings, either by testing, in conjunction with the applicable sampling provisions, or by applying an AEDM to comply with the requirements necessary to certify to each equipment class that the basic model is capable of operating within.

(i) *Customer order storage cabinets.* For customer order storage cabinets that have individual secured compartments that are convertible between the ≥32 °F and <32 °F operating temperatures, the customer order storage cabinets must determine the represented values, which includes the certified ratings, either by testing, in conjunction with the applicable sampling provisions, or by applying an AEDM with all convertible compartments either as medium temperature refrigerators or all convertible compartments as low-temperature freezers, or at the lowest application product temperature for each equipment class as specified in § 431.64 of this chapter, to comply with the requirements necessary to certify to each equipment class that the basic model is capable of operating within.

* * * * *

■ 3. Section 429.72 is amended by adding paragraph (f) to read as follows:

§ 429.72 Alternative methods for determining non-energy ratings.

* * * * *

(f) *Commercial refrigerators, freezers, and refrigerator-freezers.* The volume of a basic model of a commercial refrigerator, refrigerator-freezer, or freezer may be determined by performing a calculation of the volume based upon computer-aided design (CAD) models of the basic model in lieu of physical measurements of a production unit of the basic model. If volume is determined by performing a calculation of volume based on CAD drawings, any value of volume of the basic model reported to DOE in a certification of compliance in accordance with § 429.42(b)(2)(iii) must be calculated using the CAD-derived volume(s) and the applicable provisions in the test procedures in 10 CFR part 431.64 for measuring volume.

■ 4. Section 429.134 is amended by adding paragraphs (s) and (t) to read as follows:

§ 429.134 Product-specific enforcement provisions.

* * * * *

(s) Reserved.

(t) *Commercial refrigerators, freezers, and refrigerator-freezers*—(1) *Verification of volume.* The volume will be measured pursuant to the test requirements of 10 CFR part 431 for each unit tested. The results of the measurement(s) will be averaged and compared to the value of the certified volume of the basic model. The certified volume will be considered valid only if the average measured volume is within five percent of the certified volume.

(i) If the certified volume is found to be valid, the certified volume will be used as the basis for determining the maximum daily energy consumption allowed for the basic model.

(ii) If the certified volume is found to be invalid, the average measured volume of the units in the sample will be used as the basis for determining the maximum daily energy consumption allowed for the basic model.

(2) *Verification of total display area.* The total display area will be measured pursuant to the test requirements of 10 CFR part 431 for each unit tested. The results of the measurement(s) will be averaged and compared to the value of the certified total display area of the basic model. The certified total display area will be considered valid only if the average measured total display area is within five percent of the certified total display area.

(i) If the certified total display area is found to be valid, the certified total display area will be used as the basis for determining the maximum daily energy consumption allowed for the basic model.

(ii) If the certified total display area is found to be invalid, the average measured total display area of the units in the sample will be used as the basis for determining the maximum daily energy consumption allowed for the basic model.

(3) *Determination of pull-down temperature application.* A classification of a basic model as pull-down temperature application will be considered valid only if a model meets the definition of pull-down temperature application specified in § 431.62 of this chapter as follows.

(i) 12-ounce beverage can temperatures will be measured for 12-ounce beverage cans loaded at the locations within the commercial refrigerator that are as close as possible to the locations that would be measured by test simulators according to the test procedure for commercial refrigerators specified in § 431.64 of this chapter.

(ii) The commercial refrigerator will be operated at ambient conditions consistent with those specified for commercial refrigerators in § 431.64 of this chapter and at the control setting necessary to achieve a stable integrated average temperature of 38 °F, prior to loading.

(iii) 12-ounce beverage cans to be fully loaded into the commercial refrigerator (with and without temperature measurements) will be maintained at 90 °F ± 2 °F based on the average measured 12-ounce beverage

can temperatures prior to loading into the commercial refrigerator.

(iv) The duration of pull-down (which must be 12 hours or less) will be determined starting from closing the commercial refrigerator door after completing the 12-ounce beverage can loading until the integrated average temperature reaches 38 °F ± 2 °F.

(v) An average stable temperature of 38 °F will be determined by operating the commercial refrigerator for an additional 12 hours after initially reaching 38 °F ± 2 °F with no changes to control settings, and determining an integrated average temperature of 38 °F ± 2 °F at the end of the 12 hour stability period.

PART 431—ENERGY EFFICIENCY PROGRAM FOR CERTAIN COMMERCIAL AND INDUSTRIAL EQUIPMENT

■ 5. The authority citation for part 431 continues to read as follows:

Authority: 42 U.S.C. 6291–6317; 28 U.S.C. 2461 note.

■ 6. Section 431.62 is revised to read as follows:

§ 431.62 Definitions concerning commercial refrigerators, freezers and refrigerator-freezers.

Air-curtain angle means:

(1) For equipment without doors and without a discharge air grille or discharge air honeycomb, the angle between a vertical line extended down from the highest point on the manufacturer's recommended load limit line and the load limit line itself, when the equipment is viewed in cross-section; and

(2) For all other equipment without doors, the angle formed between a vertical line and the straight line drawn by connecting the point at the inside edge of the discharge air opening with the point at the inside edge of the return air opening, when the equipment is viewed in cross-section.

Basic model means all commercial refrigeration equipment manufactured by one manufacturer within a single equipment class, having the same primary energy source, and that have essentially identical electrical, physical, and functional characteristics that affect energy consumption.

Blast chiller means commercial refrigeration equipment, other than a blast freezer, that is capable of the rapid temperature pull-down of hot food products from 135 °F to 40 °F within a period of four hours, when measured according to the test procedure at appendix D to subpart C of part 431.

Blast freezer means commercial refrigeration equipment that is capable of the rapid temperature pull-down of hot food products from 135 °F to 40 °F within a period of four hours and capable of achieving a final product temperature of less than 32 °F, when measured according to the test procedure at appendix D to subpart C of part 431.

Buffet table or preparation table means a commercial refrigerator with an open-top refrigerated area, that may or may not include a lid, for displaying or storing merchandise and other perishable materials in pans or other removable containers for customer self-service or food production and assembly. The unit may or may not be equipped with a refrigerated storage compartment underneath the pans or other removable containers that is not thermally separated from the open-top refrigerated area.

Chef base or griddle stand means commercial refrigeration equipment that has a maximum height of 32 inches, including any legs or casters, and that is designed and marketed for the express purpose of having a griddle or other cooking appliance placed on top of it that is capable of reaching temperatures hot enough to cook food.

Closed solid means equipment with doors, and in which more than 75 percent of the outer surface area of all doors on a unit are not transparent.

Closed transparent means equipment with doors, and in which 25 percent or more of the outer surface area of all doors on the unit are transparent.

Commercial freezer means a unit of commercial refrigeration equipment in which all refrigerated compartments in the unit are capable of operating below 32 °F (±2 °F).

Commercial hybrid means a unit of commercial refrigeration equipment:

(1) That consists of two or more thermally separated refrigerated compartments that are in two or more different equipment families, and

(2) That is sold as a single unit.

Commercial refrigerator means a unit of commercial refrigeration equipment in which all refrigerated compartments in the unit are capable of operating at or above 32 °F (±2 °F).

Commercial refrigerator-freezer means a unit of commercial refrigeration equipment consisting of two or more refrigerated compartments where at least one refrigerated compartment is capable of operating at or above 32 °F (±2 °F) and at least one refrigerated compartment is capable of operating below 32 °F (±2 °F).

Commercial refrigerator, freezer, and refrigerator-freezer means refrigeration equipment that -

(1) Is not a consumer product (as defined in § 430.2);

(2) Is not designed and marketed exclusively for medical, scientific, or research purposes;

(3) Operates at a chilled, frozen, combination chilled and frozen, or variable temperature;

(4) Displays or stores merchandise and other perishable materials horizontally, semi-vertically, or vertically;

(5) Has transparent or solid doors, sliding or hinged doors, a combination of hinged, sliding, transparent, or solid doors, or no doors;

(6) Is designed for pull-down temperature applications or holding temperature applications; and

(7) Is connected to a self-contained condensing unit or to a remote condensing unit.

Customer order storage cabinet means a commercial refrigerator, freezer, or refrigerator-freezer that stores customer orders and includes individual, secured compartments with doors that are accessible to customers for order retrieval.

Door means a movable panel that separates the interior volume of a unit of commercial refrigeration equipment from the ambient environment and is designed to facilitate access to the refrigerated space for the purpose of loading and unloading product. This includes hinged doors, sliding doors, and drawers. This does not include night curtains.

Door angle means:

(1) For equipment with flat doors, the angle between a vertical line and the line formed by the plane of the door, when the equipment is viewed in cross-section; and

(2) For equipment with curved doors, the angle formed between a vertical line and the straight line drawn by connecting the top and bottom points where the display area glass joins the cabinet, when the equipment is viewed in cross-section.

High-temperature refrigerator means a commercial refrigerator that is not capable of operating with an integrated average temperature as low as 38.0 °F (±2.0 °F).

Holding temperature application means a use of commercial refrigeration equipment other than a pull-down temperature application, except a blast chiller or freezer.

Horizontal Closed means equipment with hinged or sliding doors and a door angle greater than or equal to 45°.

Horizontal Open means equipment without doors and an air-curtain angle greater than or equal to 80° from the vertical.

Ice-cream freezer means:

(1) Prior to the compliance date(s) of any amended energy conservation standard(s) for ice-cream freezers, a commercial freezer that is designed to operate at or below −5.0 °F (±2.0 °F) and that the manufacturer designs, markets, or intends for the storing, displaying, or dispensing of frozen desserts; or

(2) Upon the compliance date(s) of any amended energy conservation standard(s) for ice-cream freezers, a commercial freezer that is designed for an operating temperature at or below −15.0 °F (±2.0 °F) and that the manufacturer designs, markets, or intends for the storing, displaying, or dispensing of frozen desserts.

Integrated average temperature means the average temperature of all test package measurements taken during the test.

Lighting occupancy sensor means a device which uses passive infrared, ultrasonic, or other motion-sensing technology to automatically turn off or dim lights within the equipment when no motion is detected in the sensor's coverage area for a certain preset period of time.

Lowest application product temperature means the integrated average temperature (or for buffet tables or preparation tables, the average pan temperature of all measurements taken during the test) at which a given basic model is capable of consistently operating that is closest to the integrated average temperature (or for buffet tables or preparation tables, the average pan temperature of all measurements taken during the test) specified for testing under the DOE test procedure.

Low-temperature freezer means a commercial freezer that is not an ice-cream freezer.

Medium-temperature refrigerator means a commercial refrigerator that is capable of operating with an integrated average temperature of 38.0 °F (±2 °F), or lower.

Mobile refrigerated cabinet means commercial refrigeration equipment that is designed and marketed to operate only without a continuous power supply.

Night curtain means a device which is temporarily deployed to decrease air exchange and heat transfer between the refrigerated case and the surrounding environment.

Operating temperature means the range of integrated average temperatures at which a self-contained commercial refrigeration unit or remote-condensing commercial refrigeration unit with a thermostat is capable of operating or, in the case of a remote-condensing commercial refrigeration unit without a thermostat, the range of integrated average temperatures at which the unit is marketed, designed, or intended to operate.

Pull-down temperature application means a commercial refrigerator with doors that, when fully loaded with 12 ounce beverage cans at 90 degrees F, can cool those beverages to an average stable temperature of 38 degrees F in 12 hours or less.

Rating temperature means the integrated average temperature a unit must maintain during testing (*i.e.,* either as listed in the table at § 431.66(d)(1) or the lowest application product temperature).

Remote condensing unit means a factory-made assembly of refrigerating components designed to compress and liquefy a specific refrigerant that is remotely located from the refrigerated equipment and consists of 1 or more refrigerant compressors, refrigerant condensers, condenser fans and motors, and factory supplied accessories.

Scheduled lighting control means a device which automatically shuts off or dims the lighting in a display case at scheduled times throughout the day.

Self-contained condensing unit means a factory-made assembly of refrigerating components designed to compress and liquefy a specific refrigerant that is an integral part of the refrigerated equipment and consists of 1 or more refrigerant compressors, refrigerant condensers, condenser fans and motors, and factory supplied accessories.

Semivertical Open means equipment without doors and an air-curtain angle greater than or equal to 10° and less than 80° from the vertical.

Service over counter means equipment that has sliding or hinged doors in the back intended for use by sales personnel, with glass or other transparent material in the front for displaying merchandise, and that has a height not greater than 66 inches and is intended to serve as a counter for transactions between sales personnel and customers.

Test package means a packaged material that is used as a standard product temperature-measuring device.

Transparent means greater than or equal to 45 percent light transmittance, as determined in accordance with ASTM E1084–86 (Reapproved 2009), (incorporated by reference, see § 431.63) at normal incidence and in the intended direction of viewing.

Vertical Closed means equipment with hinged or sliding doors and a door angle less than 45°.

Vertical Open means equipment without doors and an air-curtain angle greater than or equal to 0° and less than 10° from the vertical.

Wedge case means a commercial refrigerator, freezer, or refrigerator-freezer that forms the transition between two regularly shaped display cases.

■ 7. Section 431.63 is revised to read as follows:

§ 431.63 Materials incorporated by reference.

Certain material is incorporated by reference into this subpart with the approval of the Director of the Federal Register in accordance with 5 U.S.C. 552(a) and 1 CFR part 51. To enforce any edition other than that specified in this section, the U.S. Department of Energy (DOE) must publish a document in the **Federal Register** and the material must be available to the public. All approved incorporation by reference (IBR) material is available for inspection at DOE and at the National Archives and Records Administration (NARA). Contact DOE at: the U.S. Department of Energy, Office of Energy Efficiency and Renewable Energy, Building Technologies Program, Sixth Floor, 950 L'Enfant Plaza SW, Washington, DC 20024, (202) 586–9127, *Buildings@ee.doe.gov, https://www.energy.gov/eere/buildings/building-technologies-office.* For information on the availability of this material at NARA, email: *fr.inspection@nara.gov,* or go to: *www.archives.gov/federal-register/cfr/ibr-locations.html.* The material may be obtained from the following sources:

(a) *AHRI.* Air-Conditioning, Heating, and Refrigeration Institute, 2111 Wilson Blvd., Suite 500, Arlington, VA 22201; (703) 524–8800; *ahri@ahrinet.org; www.ahrinet.org/Content/StandardsProgram_20.aspx.*

(1) ARI Standard 1200–2006, *Performance Rating of Commercial Refrigerated Display Merchandisers and Storage Cabinets,* 2006; IBR approved for § 431.66.

(2) AHRI Standard 1200 (I–P)–2010, *2010 Standard for Performance Rating of Commercial Refrigerated Display Merchandisers and Storage Cabinets,* 2010; IBR approved for § 431.66.

(3) AHRI Standard 1200–202X (AHRI 1200–202X), *Performance Rating of Commercial Refrigerated Display Merchandisers and Storage Cabinets,* [publication expected 2022]; IBR approved for the following appendices to this subpart: B; C; D.

(4) AHRI Standard 1320 (I–P), (AHRI 1320–2011) *2 Performance Rating of Commercial Refrigerated Display Merchandisers and Storage Cabinets for Use With Secondary Refrigerants,* 2011 IBR approved for the following appendices to this subpart: B.

(b) *ASHRAE.* The American Society of Heating, Refrigerating, and Air-Conditioning Engineers, Inc., 1971 Tullie Circle NE, Atlanta, GA 30329; (404) 636–8400; *www.ashrae.org/.* (1) ASHRAE Standard 72–2018R (ASHRAE 72–2018R), *Method of Testing Open and Closed Commercial Refrigerators and Freezers,* [publication expected 2022]; IBR approved for the following appendices to this subpart: B; C; D.

(2) [Reserved]

(c) *ASTM.* ASTM International, 100 Barr Harbor Drive, P.O. Box C700, West Conshohocken, PA 19428; (877) 909–2786; *www.astm.org/.*

(1) ASTM E1084–86 (Reapproved 2009), *Standard Test Method for Solar Transmittance (Terrestrial) of Sheet Materials Using Sunlight,* approved April 1, 2009; IBR approved for § 431.62. (2) ASTM F2143–16, *Standard Test Method for Performance of Refrigerated Buffet and Preparation Tables,* approved May 1, 2016; IBR approved for the following appendices to this subpart: C.

■ 8. Section 431.64 is revised to read as follows:

§ 431.64 Uniform test method for the measurement of energy consumption of commercial refrigerators, freezers, and refrigerator-freezers.

(a) *Scope.* This section provides the test procedures for measuring, pursuant to EPCA, the energy consumption or energy efficiency for a given equipment category of commercial refrigerators, freezers, and refrigerator-freezers.

(b) *Testing and calculations.* (1) Determine the daily energy consumption and volume or total display area of each covered commercial refrigerator, freezer, or refrigerator-freezer by conducting the appropriate test procedure set forth in appendix B to this subpart. The daily energy consumption of commercial refrigeration equipment shall be calculated using raw measured values and the final test results shall be reported in increments of 0.01 kWh/day.

(2) Determine the daily energy consumption and pan storage volume, pan display area, and refrigerated volume of each buffet table or preparation table by conducting the appropriate test procedure set forth in appendix C to this subpart. The daily energy consumption shall be calculated using raw measured values and the final test results shall be recorded in increments of 0.01 kWh/day.

(3) Determine the energy consumption per weight of product and product capacity of each blast chiller and blast freezer by conducting the appropriate test procedure set forth in appendix D to this subpart. The energy consumption per weight of product shall be calculated using raw measured values and the final test results shall be recorded in increments of 0.01 kWh/lb.

Appendix A [Removed and Reserved]

■ 9. Appendix A to subpart C of part 431is removed and reserved.

■ 10. Appendix B to subpart C of part 431 is revised to read as follows:

Appendix B to Subpart C of Part 431—Uniform Test Method for the Measurement of Energy Consumption of Commercial Refrigerators, Freezers, and Refrigerator-Freezers

Note: Prior to [date 360 days after publication of final rule], any representations, including for certification of compliance, made with respect to the energy use or efficiency of commercial refrigeration equipment, except for buffet tables or preparation tables, blast chillers, blast freezers, or mobile refrigerated cabinets, must be made in accordance with the results of testing pursuant to this appendix that was in place on January 1, 2022. On and after [date 360 days after publication of final rule], any representations, including for certification of compliance, made with respect to the energy use or efficiency of commercial refrigeration equipment, except for buffet tables or preparation tables, blast chillers, blast freezers, or mobile refrigerated cabinets, must be made in accordance with the results of testing pursuant to this appendix.

The test procedure for equipment cooled only by secondary coolants in section 1.1.3 of this appendix is not required for use until the compliance date(s) of any amended energy conservation standard(s) for such commercial refrigeration equipment.

High-temperature refrigerators must be tested as medium-temperature refrigerators according to section 2.1.3 of this appendix based on the lowest application product temperature until the compliance date(s) of any amended energy conservation standard(s) established for high-temperature refrigerators. On and after the compliance date(s) of such energy conservation standard(s), high-temperature refrigerators must be tested pursuant to this appendix.

0. Incorporation by Reference

DOE incorporated by reference in § 431.63 the entire standard for AHRI 1200–202X; AHRI 1320–2011; and ASHRAE 72–2018R. However, only enumerated provisions of those documents are applicable to this appendix as follows:

0.1. AHRI 1200–202X

0.1.1. Section 3, ''Definitions,'' Section 4, ''Test Requirements,'' and Section 7, ''Symbols and Subscripts'' as referenced in section 1.1 of this appendix.

0.1.2. Section 6, ''Rating Requirements for Self-contained Commercial Refrigerated Display Merchandisers and Storage Cabinets'' as referenced in section 1.1.1 of this appendix.

0.1.3. Section 5, ''Rating Requirements for Remote Commercial Refrigerated Display Merchandisers and Storage Cabinets'' as referenced in section 1.1.2 of this appendix.

0.1.4. Appendix C, ''Commercial Refrigerated Display Merchandiser and Storage Cabinet Refrigerated Volume Calculation—Normative'' as referenced in section 3.1 of this appendix.

0.2. AHRI 1320–2011

0.2.1. Sections 5.2.7 and 5.2.8 as referenced in section 1.1.3 of this appendix.

1. Test Procedure

1.1. Determination of Daily Energy Consumption. Determine the daily energy consumption of each covered commercial refrigerator, freezer, or refrigerator-freezer by conducting the test procedure set forth in the AHRI 1200–202X, Section 3, ''Definitions,'' Section 4, ''Test Requirements,'' and Section 7, ''Symbols and Subscripts''. References to ASHRAE Standard 72 refer to ASHRAE 72–2018R.

1.1.1. For each commercial refrigerator, freezer, or refrigerator-freezer with a self-contained condensing unit, also use AHRI 1200–202X, Section 6, ''Rating Requirements for Self-contained Commercial Refrigerated Display Merchandisers and Storage Cabinets.''

1.1.2. For each commercial refrigerator, freezer, or refrigerator-freezer with a remote condensing unit, also use AHRI 1200–202X, Section 5, ''Rating Requirements for Remote Commercial Refrigerated Display Merchandisers and Storage Cabinets.''

1.1.3. For each commercial refrigerator, freezer, or refrigerator-freezer used with a secondary coolant, test according to section 1.1.2 of this appendix, except in place of the equations for CDEC and CEC in Sections 5.2 and 5.2.1 of AHRI 1200–202X, respectively, apply the following equations:

$$CDEC = CEC + [FEC + LEC + AEC + DEC + PEC]^* + CPEC$$

$$CEC = [(Q_{rt} + Q_{CP}) \cdot (t—t_{dt})]/(EER \cdot 1000)$$

Where CPEC and Q_{CP} are as specified in Sections 5.2.7 and 5.2.8 of AHRI 1320–2011 and EER is determined based on a temperature that is 6.0 °F lower than the secondary coolant cabinet inlet temperature.

1.2. Methodology for Determining Applicability of Transparent Door Equipment Families. To determine if a door for a given model of commercial refrigeration equipment is transparent: (1) Calculate the outer door surface area including frames and mullions; (2) calculate the transparent surface area within the outer door surface area excluding frames and mullions; (3) calculate the ratio of (2) to (1) for each of the outer doors; and (4) the ratio for the transparent surface area of all outer doors must be greater than 0.25 to qualify as a transparent equipment family.

1.3. Drawers. Drawers shall be treated as identical to doors when conducting the DOE test procedure. Commercial refrigeration equipment with drawers shall be configured with Gastronorm food service pans, installed per the manufacturer's instructions to the maximum size pan configuration specified. The net usable volume where test simulators are not required shall be filled with filler material so that between 60 percent and 80

percent of the net usable volume is uniformly occupied by filler material. Packing of test simulators and filler packages shall be in accordance with the requirements for commercial refrigerators without shelves, as specified in Section 5.4.4 of ASHRAE 72–2018R. Specifically, the net usable volume is the storage volume of the pans up to the top edge of the pan. Test simulators shall be placed at the corner locations of each pan. For any pans not wide or deep enough to allow for test simulators at each corner (*i.e.,* not enough space to have test simulators side-by-side), center the test simulators along the pan edge in that dimension. For any pans not tall enough to allow for test simulators at the top and bottom at each location (*i.e.,* the pan is not tall enough to allow for two test simulators to be stacked within the height of the pan), load a test simulator only at the top edge of the pan in each required location.

1.4. Long-time Automatic Defrost. For commercial refrigeration equipment not capable of operating with defrost intervals of 24 hours or less, testing may be conducted using a two-part test method.

1.4.1. First Part of Test. The first part of the test shall be a 24-hour test starting in steady-state conditions and including eight hours of door opening (according to ASHRAE 72–2018R). The energy consumed in this test, ET1, shall be recorded.

1.4.2. Second Part of Test. The second part of the test shall be a defrost cycle, including any operation associated with a defrost. The start and end of the test period be determined as the last time before and first time after a defrost occurrence when the measured average simulator temperature (*i.e.,* the instantaneous average of all test simulator temperature measurements) is within 0.5 °F of the IAT as measured during the first part of the test. The energy consumed in this test, ET2, and duration, t_{DI}, shall be recorded.

1.4.3. Daily Energy Consumption. Based on the measured energy consumption in these two tests, the daily energy consumption (DEC) in kWh shall be calculated as:

$$DEC = ET1 \times \frac{(1{,}440 - t_{NDI)}}{1{,}440} + \frac{ET2}{t_{DC}}$$

$$t_{NDI} = \frac{t_{DI}}{t_{DC}}$$

Where:

DEC = daily energy consumption, in kWh;
ET 1 = energy consumed during the first part of the test, in kWh;
ET 2 = energy consumed during the second part of the test, in kWh;
t_{NDI} = normalized length of defrosting time per day, in minutes;
t_{DI} = length of time of defrosting test period, in minutes;
t_{DC} = minimum time between defrost occurrences, in days; and
1440 = conversion factor, minutes per day.

1.5. Customer Order Storage Cabinets. Customer order storage cabinets shall conduct door openings according to ASHRAE 72–2018R, except that each door shall be opened to the fully open position for 8 seconds, once every 2 hours, for 6 door-opening cycles.

1.5.1. Ambient Compartments. For customer order storage cabinets that have at least one individual secured compartment that is not capable of maintaining an integrated average temperature below the ambient dry-bulb temperature, the individual secured compartment(s) at ambient dry-bulb temperature shall be categorized as a high-temperature refrigerator compartment for the purpose of testing and rating. All volume, total display area, and energy consumption calculations shall be included within the high-temperature refrigerator category and summed with other high-temperature refrigerator category compartment(s) calculations.

1.5.2. Convertible Compartments. For customer order storage cabinets that have individual secured compartments that are convertible between the ambient dry-bulb temperature and the ≥32 °F operating temperature, the convertible compartment shall be tested as a medium-temperature refrigerator compartment or at the lowest application product temperature as specified in section 2.2. of this appendix.

1.5.3. Inverse Refrigeration Load Test. For customer order storage cabinets that supply refrigerant to multiple individual secured compartments and that allow the suction pressure from the evaporator in each individual secured compartment to float based on the temperature required to store the customer order in that individual secured compartment, test according to section 1.1.2 of this appendix, except that energy (heat) loss shall be allowed at a rate and ΔT equivalent to the energy gains of a standard refrigerated cabinet as specified in sections 1.5.3.1–1.5.3.3 of this appendix.

1.5.3.1. Anti-sweat door heaters. Anti-sweat door heaters shall be de-energized for the inverse refrigeration load test specified in section 1.5.3. of this appendix.

1.5.3.2. Integrated Average Temperature. For medium-temperature refrigerator compartments, the integrated average temperature shall be 112.4 °F ± 2.0 °F. For low-temperature freezer compartments, the integrated average temperature shall be 150.4 °F ± 2.0 °F. For ambient compartments, the integrated average temperature shall be 75.4 °F ± 2.0 °F.

1.5.3.3. Daily Energy Consumption. Determine the calculated daily energy consumption (CDEC) and the EER based on AHRI 1200–202X, Section 5, ''Rating Requirements for Remote Commercial Refrigerated Display Merchandisers and Storage Cabinets,'' except that the compressor energy consumption (CEC) shall be calculated by applying the following equations:

$$CEC = \frac{[(Q \times t) + ML + (FEC + AEC + DEC) \times 3.412]}{EER \times 1000}$$

$$Q = \frac{W_{in} \times 3.412}{t}$$

$$ML = N_d \times (A_e + A_m)$$

$$A_e = [(H_a - H_c) - (H_t - H_a)] \times m_a$$

$$A_m = C_{p,liner} \times W_{liner} \times \Delta T_{liner}$$

Where:

CEC = compressor energy consumption, kWh per day;
Q = inverse refrigeration load (does not include waste heat from auxiliary components and moisture infiltration), in BTU per h;
t = test duration, in h;
ML = moisture load impacts, BTU per day;
FEC = evaporator fan motor(s) energy consumption, Wh per day;
AEC = anti-condensate heater(s) energy consumption, Wh per day;
DEC = defrost heater(s) energy consumption, Wh per day;
3.412 = conversion factor, BTU per Wh;
EER = energy efficiency ratio, BTU per Wh;
1000 = conversion factor, W per kW;
W_{in} = energy input measured over the test period for all energized components (heaters, controls, and fans) located in the refrigerated compartments, in Wh;
N_d = number of door openings during test, unitless;
A_e = enthalpy adjustment, BTU per day;
A_m = moisture/frost accumulation, BTU per day;
H_a = ambient air enthalpy, BTU per pound;
H_c = compartment air enthalpy based on air conditions during cold operation (*e.g.,* 0 °F dry bulb/-20 °F dew point for freezer compartment, 38 °F dry bulb/20 °F dew point for refrigerator compartment, 75 °F dry bulb/20 °F dew point for ambient compartment), BTU per pound;
H_t = compartment air enthalpy during heat leak test based on dew point being equal to ambient air dew point, BTU per pound;
m_a = mass of compartment air exchanged (30% of total compartment volume) based density of air during cold operation, pounds;
$C_{p,liner}$ = specific heat of liner material, BTU per °F per pound;
W_{liner} = weight of all liner parts, pounds; and
ΔT_{liner} = maximum temperature rise of all liner parts (*e.g.,* 4.5 °F, 2.5 °F, and 1 °F for freezer, refrigerator, and ambient compartments, respectively), °F.

2. Test Conditions

2.1. Integrated Average Temperatures. Conduct the testing required in section 1 of this appendix, and determine the daily energy consumption at the applicable integrated average temperature as follows:

2.1.1. Ice-cream Freezers. Test ice-cream freezers and ice-cream freezer compartments to the integrated average temperature specified in Section 3.14.1, ''Ice Cream Applications'' of AHRI 1200–202X.

2.1.2. Low-temperature Freezers. Test low-temperature freezers and low-temperature freezer compartments to the integrated average temperature specified in Section 3.14.2, ''Low Temperature Applications'' of AHRI 1200–202X.

2.1.3. Medium-temperature Refrigerators. Test medium-temperature refrigerators and medium-temperature refrigerator compartments to the integrated average temperature specified in Section 3.14.3, ''Medium Temperature Applications'' of AHRI 1200–202X.

2.1.4. High-temperature Refrigerators. Test high-temperature refrigerators and high-temperature refrigerator compartments to the integrated average temperature specified in section 3.14.4, ''High Temperature Applications'' of AHRI 1200–202X.

2.2. Lowest Application Product Temperature. If a unit of commercial refrigeration equipment is not able to be operated at the integrated average temperature specified in paragraph 2.1 of this appendix, test the unit at the lowest application product temperature (LAPT), as defined in § 431.62. For units equipped with a thermostat, LAPT is the lowest thermostat setting (for units that are only able to operate at temperatures above the specified test temperature) or the highest thermostat setting (for units that are only able to operate at temperatures below the specified test temperature). For remote condensing equipment without a thermostat or other means of controlling temperature at the case, the lowest application product temperature is the temperature achieved with the dew point temperature or mid-point evaporator temperature (as defined in AHRI 1200–202X) set to 5 degrees colder than that required to maintain the manufacturer's specified application temperature that is closest to the specified integrated average temperature.

2.3. Testing at NSF Test Conditions. For commercial refrigeration equipment that is also tested in accordance with NSF test procedures (Type I and Type II), integrated average temperatures and ambient conditions used for NSF testing may be used in place of the DOE-prescribed integrated average temperatures and ambient conditions provided they result in a more stringent test. That is, the measured daily energy consumption of the same unit, when tested at the rating temperatures and/or ambient conditions specified in the DOE test procedure, must be lower than or equal to the measured daily energy consumption of the unit when tested with the rating temperatures or ambient conditions used for NSF testing. The integrated average temperature measured during the test may be lower than the range specified by the DOE applicable temperature specification provided in paragraph 2.1 of this appendix, but may not exceed the upper value of the specified range. Ambient temperatures and/or humidity values may be higher than those specified in the DOE test procedure.

2.4. Remote Condensing with Direct Expansion Carbon Dioxide. For remote condensing commercial refrigeration equipment used with direct expansion carbon dioxide refrigerant, instead of the liquid refrigerant conditions specified in appendix A to ASHRAE 72–2018R, the liquid inlet saturation temperature shall be 38 °F with liquid inlet subcooling of 5 °F.

3. Volume and Total Display Area

3.1. Determination of Volume. Determine the volume of a commercial refrigerator, freezer, and refrigerator-freezer using the method set forth in AHRI Standard 1200–202X, appendix C, ''Commercial Refrigerated Display Merchandiser and Storage Cabinet Refrigerated Volume Calculation—Normative.''

3.2. Determination of Total Display Area. Determine the total display area of a commercial refrigerator, freezer, and refrigerator-freezer using the method set forth in AHRI 1200–202X, section 3.18 and appendix C, ''Commercial Refrigerated Display Merchandiser and Storage Cabinet Total Display Area (TDA) Calculation—Normative.''

■ 11. Appendix C to subpart C of part 431 is added to read as follows:

Appendix C to Subpart C of Part 431—Uniform Test Method for the Measurement of Energy Consumption of Buffet Tables or Preparation Tables

Note: After [date 360 days following publication of final rule], any representations, including for compliance certification purposes, made with respect to

the energy consumption of a buffet table or preparation table must be made in accordance with the results of testing pursuant to this appendix.

0. Incorporation by Reference

DOE incorporated by reference in § 431.63 the entire standard for AHRI 1200–202X, ASHRAE 72–2018R, and ASTM F2143–16. However, only those provisions specifically referenced in this appendix are applicable to this appendix.

1. Test Procedure

1.1. Determination of Daily Energy Consumption. Determine the daily energy consumption of each buffet table or preparation table with a self-contained condensing unit by conducting the test procedure set forth in ASTM F2143–16, section 3, ''Terminology,'' section 6.1, ''Analytical Balance Scale,'' section 6.2, ''Pans,'' Section 7, ''Reagents and Materials,'' section 9, ''Preparation of Apparatus'' (only section 9.6), section 10.1, ''General'' (only section 10.1.1), section 10.2, ''Pan Thermocouple Placement,'' section 10.5, ''Test'' (only sections 10.5.5 and 10.5.6), section 11.4, ''Energy Consumption'' (only section 11.4.1), and section 11.5, ''Production Capacity'', with additional instructions as described in the following sections.

1.2. Test Conditions. Ambient conditions and instrumentation for testing shall be as specified in the ''Chamber conditions'' and ''Electricity supply and consumption of unit under test and components metered separately'' portions of Appendix A to ASHRAE 72–2018R and measured according to Section 6.1 of ASHRAE 72–2018R and the specifications in Appendix A of ASHRAE 72–2018R. The ''highest point'' of the buffet table or preparation table shall be determined as the highest point of the open-top refrigerated area of the buffet table or preparation table, without including the height of any lids or covers. The geometric center of the buffet table or preparation table is: for buffet tables or preparation tables without refrigerated compartments, the geometric center of the top surface of the open-top refrigerated area; and for buffet tables or preparation tables with refrigerated compartments, the geometric center of the door opening area for the refrigerated compartment.

1.3. Test Setup. Install the buffet table or preparation table according to Sections 5.1, 5.2, and 5.3 of ASHRAE 72–2018R.

1.4. Test Load.

1.4.1. Pan Loading. Fill pans with distilled water to within 0.5 inches of the top edge of the pan. For pans that are not configured in a horizontal orientation, only the lowest side of the pan is filled to within 0.5 inches of the top edge of the pan with distilled water.

1.4.2. Refrigerated Compartments. Measure the temperature of any refrigerated compartment(s) as specified in Section 9.6 of ASTM F2143–16. The thermocouples for measuring compartment air temperature shall be in thermal contact with the center of a 1.6-oz (45-g) cylindrical brass slug with a diameter and height of 0.75 in. The brass slugs shall be placed at least 0.5 in from any heat-conducting surface.

1.5. Stabilization and Test Period. Prepare the unit for testing and conduct two test periods to determine stability according to Sections 7.1 through 7.5 of ASHRAE 72–2018R, excluding sections 7.2.1, 7.2.2, 7.3.1, 7.3.2, 7.3.3, and 7.3.4. The preparation period under Section 7.2 of ASHRAE 72–2018R includes loading the test unit pans with distilled water and adjusting the controls to maintain the desired performance.

1.5.1. Test Periods A and B. Conduct two test periods, A and B, as specified in Section 7.3 of ASHRAE 72–2018R (excluding sections 7.3.1, 7.3.2, 7.3.3, and 7.3.4). The 24-hour test periods shall begin with an 8 hour active period as specified in Section 10.5.5 of ASTM F2143–16. Following the active period, the remaining 16 hours of the test period shall be a standby period with the pans remaining in place, any pan covers in the closed position, and with no additional door openings.

1.5.2. Stability. Average pan temperatures shall be used to determine stability, as specified in Section 7.5 of ASHRAE 72–2018R, rather than average test simulator temperatures.

1.5.3. Data Recording. For each test period, record data as specified in Section 10.1.1 of ASTM F2143–16, except record wet-bulb temperature rather than relative humidity. Rather than voltage, current, and power as specified in Section 10.1.1 of ASTM F2143–16, record the electrical supply potential and frequency and energy consumption as specified in Appendix A of ASHRAE 72–2018R.

1.6. Target Temperatures.

1.6.1. Average Pan Temperature. The average of all pan temperature measurements during the test period shall be 38 °F ± 2 °F. If the unit under test is not able to be operated at this average temperature range, test the unit at the lowest application product temperature (LAPT), as defined in § 431.62. For units equipped with a thermostat, LAPT is the lowest thermostat setting (for units that are only able to operate at temperatures above the specified test temperature) or the highest thermostat setting (for units that are only able to operate at temperatures below the specified test temperature).

1.6.2. Average Compartment Temperature. The average of all compartment temperature measurements during the test period shall be 38 °F ± 2 °F. If the unit under test is not capable of maintaining both average pan temperature and average compartment temperature within the specified range, the average compartment temperature shall be the average temperature necessary to maintain average pan temperature within the specified range. If the unit is tested at the LAPT for the average pan temperature, as described in section 1.6.1 of this appendix, the average compartment temperature is the average of all compartment temperature measurements at that control setting.

2. Capacity Metrics

2.1. Pan Volume. Determine pan volume according to Section 11.5 of ASTM F2143–16.

2.2. Refrigerated Volume. Determine the volume of any refrigerated compartments according to section 3.17 and Appendix C of AHRI 1200–202X . The refrigerated volume excludes the volume occupied by pans loaded in the open-top display area for testing.

2.3. Pan Display Area. Determine the pan display area based on the total surface area of water in the test pans when filled to within 0.5 inches of the top edge of the pan, or for test pans that are not configured in a horizontal orientation, when the lowest side of the pan is filled to within 0.5 inches of the top edge of the pan with water.

■ 12. Appendix D to subpart C of part 431 is added to read as follows:

Appendix D to Subpart C of Part 431—Uniform Test Method for the Measurement of Energy Consumption of Blast Chillers or Blast Freezers

Note: After [date 360 days after publication of a final rule], any representations, including for compliance certification purposes, made with respect to the energy use or efficiency of blast chillers or blast freezers, must be made in accordance with the results of testing pursuant to this appendix.

0. Incorporation by Reference

DOE incorporated by reference in § 431.63 the entire standard for AHRI 1200–202X and ASHRAE 72–2018R. However, only enumerated provisions of those documents are applicable to this appendix as follows:

0.1. AHRI 1200–202X.

0.1.1. Appendix C, ''Commercial Refrigerated Display Merchandiser and Storage Cabinet Refrigerated Volume Calculation—Normative,'' as referenced in section 1.1.1. of this appendix.

0.2. ASHRAE 72–2018R.

0.2.1. Section 4, ''Instruments,'' as referenced in section 1.2. of this appendix.

0.2.2. Section 5, ''Preparation of Unit Under Test,'' (except section 5.4, ''Loading of Test Simulators and Filler Material'') as referenced in section 1.2. of this appendix.

0.2.3. Section 6.1, ''Ambient Temperature and Humidity,'' as referenced in sections 1.2. and 1.4. of this appendix.

0.2.4. Figure 6, ''Location of Ambient Temperature Indicators,'' as referenced in sections 1.2. and 1.4. of this appendix.

0.2.5. Normative Appendix A, ''Measurement Locations, Tolerances, Accuracies, and Other Characteristics,'' (only the measured quantities specified in section 1.2.1. of this appendix) as referenced in sections 1.2. and 1.4. of this appendix.

1. Test Procedures

1.1. Scope. This section provides the test procedures for measuring the energy consumption in kilowatt-hours per pound (kWh/lb) for self-contained commercial blast chillers and blast freezers that have a refrigerated volume of up to 500 ft^3.

1.1.1. Determination of Refrigerated Volume. Determine the refrigerated volume of a self-contained commercial blast chiller or blast freezer using the method set forth in AHRI 1200–202X, Appendix C, ''Commercial Refrigerated Display Merchandiser and Storage Cabinet Refrigerated Volume Calculation—Normative.''

1.2. Determination of Energy Consumption. Determine the energy consumption of each covered blast chiller or blast freezer by conducting the test procedure set forth in ASHRAE 72–2018R, Section 4, ''Instruments,'' Section 5, ''Preparation of Unit Under Test,'' (except Section 5.4, ''Loading of Test Simulators and Filler Material'') Section 6.1, ''Ambient Temperature and Humidity,'' Figure 6, ''Location of Ambient Temperature Indicators,'' and normative Appendix A, ''Measurement Locations, Tolerances, Accuracies, and Other Characteristics,'' (only the measured quantities specified in section 1.2.1. of this appendix) as well as the requirements of this appendix.

1.2.1. Measured Quantities in Normative Appendix A of ASHRAE 72–2018R. The following measured quantities shall be in accordance with the specifications of normative Appendix A of ASHRAE 72–2018R: dry bulb temperature (except for deviations specified in section 1.3 and 1.4. of this appendix), electrical supply frequency, electrical supply potential, energy consumed (except for deviations specified in section 1.3. of this appendix), extent of non-perforated surface beyond edges of unit under test, front clearance, rear or side clearance, and time measurements.

1.2.2. Additional Specifications for ASHRAE 72–2018R. The term ''refrigerator'' used in ASHRAE 72–2018R shall instead refer to ''blast chiller'' or ''blast freezer,'' as applicable. In Section 5.3 of ASHRAE 72–2018R, the phrase ''all necessary components and accessories shall be installed prior to loading the storage and display areas with test simulators and filler material'' shall be replaced with ''all necessary components and accessories shall be installed prior to precooling the unit under test''. Section 5.3.5 shall also require that, prior to precooling the unit under test, the condensate pan shall be dry.

1.3. Data Recording Measurement Intervals. Measurements shall be continuously recorded during the test in intervals no greater than 10 seconds.

1.4. Test Conditions. The required test conditions shall have dry bulb temperature values according to Table D.1 when measured at point A in figure 6 of ASHRAE 72–2018R and according to Section 6.1 of ASHRAE 72–2018R.

TABLE D.1—TEST CONDITION VALUES AND TOLERANCES

Test condition	Value	Tolerance
Dry Bulb	86.0°F	Average over test period: ±1.8°F. Individual measurements: ±3.6°F.

1.5. Product Pan. The product pan shall be a 12 inch by 20 inch by 2.5 inch, 22 gauge or heavier, and 300 series stainless steel pan. If the blast chiller or blast freezer is not capable of holding the 12 inch by 20 inch by 2.5 inch product pan dimensions, the manufacturer's recommended pan size shall be used, conforming as closely as possible to the 12 inch by 20 inch by 2.5 inch pan dimensions.

1.6. Product Temperature Measurement. The product temperature shall be measured in the geometric center of the measured product pans using an unweighted thermocouple placed ⅝ of an inch above the bottom of the measured product pan. The thermocouple leads shall be secured to the bottom of the measured product pan while also allowing for the transfer of the measured product pan from the heating source into the blast chiller's or blast freezer's cabinet.

1.7. Product Preparation. The product shall be made for each product pan and shall be loaded to 2 inches of product thickness (*i.e.,* depth) within the product pan unless an additional product pan with a product thickness of less than 2 inches is needed to meet the product capacity determined in section 2.1 of this appendix. A 20 percent by volume propylene glycol (1,2-Propanediol) mixture in water shall be prepared. In each product pan, pour the propylene glycol mixture over #20 mesh southern yellow pine sawdust to create a 22 percent to 78 percent by mass slurry. An example of an acceptable sawdust specification is the American Wood Fibers brand, #20 Mesh Pine Sawdust. Mix until the sawdust becomes completely saturated and leave uncovered in the product pan. Verify that the product pan thermocouple is fully submerged in the product mixture and reposition the product pan thermocouple to the requirements of section 1.6. of this appendix if the product pan thermocouple is incorrectly positioned after mixing. Each product pan shall be weighed before and after the food product simulator is added and prior to heating the product. The weight of the product shall not include the weight of the pans, thermocouples, or wires. A cumulative total of the product weight shall be calculated and the product pans shall continue to be loaded with the product mixture until the cumulative total reaches, but not exceeds, the product capacity determined in section 2.1 of this appendix with a tolerance of ±5 percent or ±2 pounds, whichever is less. The cumulative total weight of product, the weight of product in each individual pan, and the number of pans shall be recorded.

1.8. Product Pan Heating. Measured product pans shall be maintained at an average temperature of 160.0 °F ± 1.8 °F and individual pan temperatures shall be maintained at 160 °F ± 10 °F for a minimum of 8 hours prior to being loaded into the blast chiller or blast freezer. Non-measured product pans shall also be heated for a minimum of 8 hours prior to being loaded into the blast chiller or blast freezer and the non-measured product pans shall be placed in alternating positions with the measured product pans in the heating device. Data acquisition for the temperature of the measured product pans and time measurements shall begin to be recorded prior to the minimum of 8 hours heating period.

1.9. Product Pan Distribution. The product pans shall be spaced evenly throughout each vertical column of rack positions in the blast chiller or blast freezer without the product pans touching any other product pans and without the product pans touching the top and the bottom of the blast chiller or blast freezer cabinet. For blast chillers or blast freezers that have an additional product pan with a product thickness of less than 2 inches, the additional product pan shall be placed as close to the middle rack position as possible while maintaining an even distribution of all product pans. If not all rack positions are occupied by product pans, the product pan locations shall be recorded.

1.10. Measured Product Pans. If multiple product pans are required per level of the blast chiller or blast freezer (*i.e.,* product pans can be loaded side-by-side at the same level), only the product temperature of one product pan per level shall be measured and the product pans measured should alternate vertical columns of the blast chiller or blast freezer cabinet so that each vertical column does not have two measured product pans on sequential levels. If a blast chiller or blast freezer requires an additional product pan with a thickness less than 2 inches, the additional product pan shall not be measured for product temperature.

1.11. Stabilization. The blast chiller or blast freezer shall stabilize at the test conditions specified in section 1.4. of this appendix for at least 24 hours without operating.

1.12. Pre-cool Cycle. Data acquisition for the test condition temperatures specified in section 1.4. of this appendix and time measurements shall begin to be recorded prior to the pre-cool cycle. The pre-cool cycle shall be initiated on a blast chiller or blast freezer once the stabilization specified in section 1.11. of this appendix is complete. The fastest pre-cool cycle shall be selected. The pre-cool cycle shall be complete when the blast chiller or blast freezer notifies the user that the pre-cool is complete. If the blast chiller or blast freezer does not notify the user that the pre-cool cycle is complete, the pre-cool cycle shall be deemed complete when the blast chiller or blast freezer reaches 40 °F or 2 °F based on the blast chiller's or blast freezer's sensing probe for blast chillers and blast freezers, respectively. For blast chillers or blast freezers without any defined pre-cool cycles, the fastest blast chilling or blast freezing cycle shall be run with an empty cabinet until the blast chiller or blast freezer reaches 40 °F or 2 °F based on the blast chiller's or blast freezer's sensing probe. During the pre-cool cycle, the blast chiller's or blast freezer's sensing probe shall remain in its default or holstered position. The pre-cool test data to be recorded are the test condition temperatures specified in section 1.4. of this appendix, pre-cool cycle selected, pre-cool duration, and final pre-cool cabinet temperature based on the blast chiller's or blast freezer's sensing probe.

1.13. Loading. The blast chiller or blast freezer door shall be fully open to an angle of not less than 75 degrees for loading at 4.0 ±1.0 minutes after the blast chiller or blast freezer completes the pre-cool cycle as specified in section 1.12 of this appendix. The door shall remain open to load all of the product pans for the entirety of the loading procedure. The door shall remain open for 20 seconds per roll-in rack and 15 seconds per product pan for roll-in and standard blast

chillers or blast freezers, respectively. The total door open period shall have a tolerance of ±5 seconds. The blast chiller's or blast freezer's sensing probe shall be inserted into the geometric center of a product pan approximately 1 inch deep in the product mixture at the median pan level in the blast chiller or blast freezer. If the product pan at the median level is the additional product pan with less than 2 inches of product thickness, the closest product pan or product pan level that is farthest away from the evaporator fan shall be used to insert the blast chiller's or blast freezer's sensing probe. If the median pan level has capacity for multiple product pans, the probed product pan shall be the furthest away from the evaporator. The sensing probe shall not touch the bottom of the product pan or be exposed to the air. The location of the product pan with the sensing probe shall be recorded. The sensing probe shall be placed so that there is no interference with the product pan thermocouple. The product pan thermocouple wiring shall not affect the energy performance of the blast chiller or blast freezer. The door shall remain closed for the remainder of the test.

1.14. Blast Chilling or Blast Freezing Cycle. Determine the blast chilling or blast freezing cycle that will conduct the most rapid product temperature pulldown that is designed for the densest food product, as stated in the blast chiller's or blast freezer's manufacturer literature. A blast chilling cycle shall have a target temperature of 38.0 °F and a blast freezing cycle shall have a target temperature of 0.0 °F. The test condition temperatures specified in section 1.4. of this appendix and the time measurements shall continue to be recorded from the pre-cool cycle. Measured product pan temperatures shall continue to be recorded from the minimum of 8-hour period of heating prior to the loading of the product pans into the blast chiller or blast freezer. Electrical supply frequency, electrical supply potential, and energy consumed shall start to be recorded as soon as the blast chiller or blast freezer door is opened to load the product pans. Once the blast chiller or blast freezer door is closed, the blast chilling cycle or blast freezing cycle shall be selected and initiated as soon as is practicable. The blast chilling cycle or blast freezing cycle selected shall be recorded. The blast chilling or blast freezing test period shall continue from the door opening until all individual measured pan temperatures are at or below 40.0 °F or 2.0 °F for blast chiller and blast freezer tests, respectively, regardless of whether the selected cycle program has terminated. If all individual measured pan temperatures do not reach 40.0 °F or 2.0 °F for blast chiller and blast freezer tests, respectively, two hours after the selected cycle program has terminated, the test shall be repeated with the target temperature lowered by 1.0 °F until all individual measured pan temperatures are at or below 40.0 °F or 2.0 °F for blast chiller and blast freezer tests, respectively, at the conclusion of the test. The duration of the blast chiller or blast freezer test shall be recorded.

1.15. Calculations. The measured energy consumption determined in section 1.14. of this appendix shall be reported in kilowatt-hours and shall be divided by the cumulative total weight of product determined in section 1.7. of this appendix in pounds.

2. Capacity Metric

2.1. Product Capacity. Determine the product capacity by reviewing all manufacturer literature that is included with the blast chiller or blast freezer. The largest product capacity by weight that is stated in the manufacturer literature shall be the product capacity. If the blast chiller or blast freezer is able to operate as both a blast chiller and a blast freezer when set to different operating modes by the user and the manufacturer literature specifies different product capacities for blast chilling and blast freezing, the largest capacity by weight stated for the respective operating mode shall be the product capacity. If no product capacity is stated in the manufacturer literature, the product capacity shall be the product capacity that fills the maximum number of 12 inch by 20 inch by 2.5 inch pans that can be loaded into the blast chiller or blast freezer according to section 1.7. of this appendix. If the blast chiller or blast freezer with no product capacity stated in the manufacturer literature is not capable of meeting the definition of a blast chiller or blast freezer according to § 431.62 upon testing according to section 1 of this appendix, one 12 inch by 20 inch by 2.5 inch pan shall be removed from the blast chiller or blast freezer until the definition of a blast chiller or blast freezer is met according to § 431.62 when testing according to section 1 of this appendix.

[FR Doc. 2022–13225 Filed 6–29–22; 8:45 am]

BILLING CODE 6450–01–P

FEDERAL REGISTER

Vol. 87 Thursday,

No. 125 June 30, 2022

Part III

Department of Homeland Security

49 Part 571

Federal Motor Vehicle Safety Standards; Child Restraint Systems, Child Restraint Systems—Side Impact Protection, Incorporation by Reference; Final Rule

DEPARTMENT OF TRANSPORTATION

National Highway Traffic Safety Administration

49 CFR Part 571

[Docket No. NHTSA–2022–0051]

RIN 2127–AK95

Federal Motor Vehicle Safety Standards; Child Restraint Systems, Child Restraint Systems—Side Impact Protection, Incorporation by Reference

AGENCY: National Highway Traffic Safety Administration (NHTSA), Department of Transportation (DOT).

ACTION: Final rule.

SUMMARY: This final rule amends Federal Motor Vehicle Safety Standard (FMVSS) (Standard) No. 213, ''Child restraint systems,'' and adds FMVSS No. 213a, which is referenced by Standard No. 213. This final rule fulfills a statutory mandate set forth in the ''Moving Ahead for Progress in the 21st Century Act'' (MAP–21) that directed the Secretary of Transportation (NHTSA by delegation) to issue a final rule to improve the protection of children seated in child restraint systems during side impacts.

DATES:

Effective date: August 1, 2022. The incorporation by reference of the publications listed in the rule is approved by the Director of the Federal Register as of August 1, 2022.

Compliance date: June 30, 2025. Optional early compliance is permitted.

Petitions for reconsideration: Petitions for reconsideration of this final rule must be received no later than August 15, 2022.

ADDRESSES: Petitions for reconsideration of this final rule must refer to the docket and notice number set forth above and be submitted to the Administrator, National Highway Traffic Safety Administration, 1200 New Jersey Avenue SE, Washington, DC 20590. Note that all petitions received will be posted without change to *http://www.regulations.gov,* including any personal information provided. To facilitate social distancing due to COVID–19, please email a copy of the petition to *nhtsa.webmaster@dot.gov.*

Privacy Act. The petition will be placed in the docket. Anyone is able to search the electronic form of all documents received into any of our dockets by the name of the individual submitting the comment (or signing the comment, if submitted on behalf of an association, business, labor union, etc.). You may review DOT's complete Privacy Act Statement in the **Federal Register** published on April 11, 2000 (Volume 65, Number 70; Pages 19477–78) or you may visit *https://www.transportation.gov/individuals/privacy/privacy-act-system-records-notices.*

FOR FURTHER INFORMATION CONTACT: For technical issues, you may call Cristina Echemendia, Office of Crashworthiness Standards, telephone 202–366–6345, email *Cristina.Echemendia@dot.gov*. For legal issues, Deirdre Fujita or Hannah Fish, Office of the Chief Counsel, telephone 202–366–2992, email *Dee.Fujita@dot.gov* or *Hannah.Fish@dot.gov.* The mailing address of these officials is the National Highway Traffic Safety Administration, U.S. Department of Transportation, 1200 New Jersey Avenue SE, West Building, Washington, DC 20590.

SUPPLEMENTARY INFORMATION:

Table of Contents

I. Executive Summary
II. Safety Need
III. Statutory Mandate
IV. Guiding Principles
V. Overview of the NPRM and Comments Received
a. Overview of the NPRM
b. Summary of the Comments
VI. Response to the Comments (Wide-Reaching Issues)
a. Are efforts better spent elsewhere on child restraint systems?
b. Will child restraints become excessively large and heavy?
c. More Bulk Is Not Necessarily Advantageous; the 2017 Test Program
d. The 40-lb Limit for Coverage of the Standard
e. Improving Side Impact Protection for Children Older Than 3-Years-Old
f. Weight as a Limiting Factor
g. Labeling CRSs for Children Weighing Over 18.1 kg (40 lb)
1. Label as ''Not Tested in Side Impacts''
2. Head Under Window Sill
VII. Aspects of the FMVSS 213a Test Procedure
a. Overview
b. Side Impact Seat Assembly Characteristics
1. Seat Characteristics
i. Rear Seat Cushion Stiffness
ii. Lower Anchorages and Top Tether Anchorages of the CRAS
2. Door Characteristics
i Beltline Height
ii. Door and Armrest Thickness and Stiffness
3. Honeycomb
4. SISA Technical Drawings
5. Other Testing Issues
i. Right-Side Impacts
ii. Sliding Seat Bearings
iii. Seat Belt Interference
c. Sled Kinematic Parameters
1. General
2. Specific Issues
i. Sliding Seat Acceleration Profile
ii. Tuning the Test To Account for Lighter Dummies
iii. Acceleration Corridor
3. Door Parameters
4. Relative Door Velocity Profile
5. Relative Velocity at Impact Time (T_0)—Tolerance
6. Longitudinal Crash Component
d. Test Set Up and Procedure
1. CRS Attachment
i. Lower Anchor and/or Seat Belt CRS Installation
ii. Tethered vs. Non-Tethered CRS Installation
iii. Distance Between Edge of Armrest and Edge of Seat
e. Dummy Positioning
f. Dummy Selection
g. Miscellaneous Comments on the Test Procedure, Including Test Setup, Sled Instrumentation, and Data Processing
h. Additional Changes
VIII. Performance Requirements
a. Q3s
1. Q3s Sourcing
2. Biofidelity Issues
3. Aspects of Testing With the Q3s
i. Reversibility
ii. HIII 3-Year-Old Child Test Dummy as an Alternative
4. Q3s Performance Measures
i. Head Injury Criterion (HIC)
ii. Head Contact (Not Assessed)
iii. Chest Deflection
b. CRABI 12-Month-Old
1. Alternative ATDs
2. Durability
3. Head-to-Door Contact
4. Component Test
5. CRS System Integrity and Energy Distribution
IX. Repeatability and Reproducibility
X. Lead Time and Effective Date
XI. Regulatory Notices and Analyses

This final rule amends FMVSS No. 213, ''Child restraint systems,'' to establish side impact performance requirements for child restraint systems (CRS) designed to seat children weighing up to 18.1 kilograms (kg) (40 pounds (lb)), or for children in a height range that includes heights up to 1100 millimeters (43.3 inches.) The side impact performance requirements are established in a new FMVSS No. 213a, which is referenced by Standard No. 213. This final rule fulfills a statutory mandate set forth in MAP–21 that directed the Secretary of Transportation (NHTSA by delegation) to issue a final rule to improve the protection of children seated in child restraint systems during side impacts.

Standard No. 213a requires child restraints designed to seat children weighing up to 18.1 kg (40 lb), or for children in a height range that includes heights up to 1100 millimeters (43.3 inches) to meet performance criteria when tested in a dynamic test replicating a vehicle-to-vehicle side impact. The child restraints must provide proper restraint, manage side

crash forces, and protect against harmful head and chest contact with intruding structures. In addition, child restraints will be required to meet other performance requirements in the sled test to ensure, among other things, the restraint can withstand crash forces from a side impact without collapsing or fragmenting in a manner that could harm the child. This new standard will reduce the number of children killed or injured in side crashes.

I. Executive Summary

Front and side crashes account for most child occupant fatalities. FMVSS No. 213 currently specifies performance requirements that child restraint systems (CRSs) must meet in a sled test simulating a frontal impact. This final rule expands the standard to adopt a side impact test. Child restraints subject to this final rule must pass the new side impact test in addition to the frontal impact test.

Impacts to the side of a vehicle rank almost equal to frontal crashes as a source of occupant fatalities and serious injuries to children ages 0 to 12 years. Side impacts are especially dangerous when the impact is on the passenger compartment because, unlike a frontal or rear-end crash, there are no substantial, energy absorbing structures between the occupant and the impacting vehicle or object. The door collapses into the passenger compartment and the occupants contact the door relatively quickly after the crash at a high relative velocity.[1]

In a typical vehicle-to-vehicle side impact similar to the one represented in Standard No. 214, ''Side impact protection'' (49 CFR 571.214), the striking vehicle first interacts with the door structure of the struck vehicle and commences to crush the door, causing it to intrude laterally into the vehicle compartment. The striking vehicle then engages the sill of the struck vehicle and begins to push the struck vehicle away. At this point, the occupant sitting on the struck side of the vehicle experiences the struck vehicle seat moving away from the impacting vehicle while the door intrudes towards him or her. The intruding door impacts the occupant and the occupant is accelerated with the door along the impact direction until the occupant reaches the velocity of the struck and striking vehicle.

Standard No. 214, protects against unreasonable risk of injury or death to occupants in vehicle-to-vehicle crashes and other side crashes. The standard has benefited all occupants,[2] but due to their size and fragility, infants and young children are dependent on child restraint systems to supplement those protections. Child restraints with internal harnesses (commonly called ''car seats,'' ''child seats'' or ''safety seats'') are highly effective safety devices. Although child seats are not currently subject to side impact testing, NHTSA estimates that these types of child restraints are already 42 percent effective in preventing death in side crashes of children 0- to 3-years-old.[3] This estimated degree of effectiveness is high, and is only 11 percentage points lower than Child Restraint System (CRS) effectiveness in frontal crashes (53 percent). Child safety seats are effective because they restrain the child within the child seat and prevent harmful contact with interior vehicle components, and have padding and an outer shell structure that shields the child and absorbs some of the crash forces.

Because MAP–21 directed NHTSA to amend FMVSS No. 213 to improve side impact protection, NHTSA designed this final rule to work within the framework of the existing frontal standard. Child restraint systems are tested in FMVSS No. 213 when attached to a standardized seat assembly representative of a passenger vehicle seat. Child restraints are tested with anthropomorphic test devices (ATDs) (test dummies) representative of the children for whom the CRS is recommended.[4] FMVSS No. 213 requires child restraints to limit the amount of inertial load that can be exerted on the head and chest of the dummy during the dynamic test. The standard requires child restraints to meet head excursion[5] limits to reduce the possibility of head injury from contact with vehicle interior surfaces and ejection. Child restraints must also maintain system integrity (*i.e.,* not fracture or separate in such a way as to harm a child), and have no contactable surface that can harm a child in a crash. There are requirements to ensure belt webbing can safely restrain the child, and that buckles can be swiftly unlatched after a crash by an adult but cannot be easily unbuckled by an unsupervised child. Child restraints other than booster seats and harnesses[6] must pass performance requirements when attached to the standard seat assembly with only a lap belt,[7] and, in a separate assessment, with only the lower anchorages of a child restraint anchorage system (CRAS).[8] The CRSs must meet more stringent head excursion requirements in another test where a top tether, if provided, may be attached. Belt-positioning (booster) seats are tested on the standard seat assembly using a Type 2 (lap and shoulder) belt.

This final rule establishes requirements for a side impact test that are equivalent to those described above, and makes child restraint systems even more protective of child occupants than they are now. It adopts performance thresholds that ensure child restraints protect against unreasonable risk of head and chest injury in side crashes, and a performance test that objectively assesses and assures achievement of such performance.

[1] Kahane, November 1982, NHTSA Report No. DOT HS 806 314.

[2] Kahane, C.J. (2015, January). Lives saved by vehicle safety technologies and associated Federal Motor Vehicle Safety Standards, 1960 to 2012—Passenger cars and LTVs—With reviews of 26 FMVSS and the effectiveness of their associated safety technologies in reducing fatalities, injuries, and crashes. (Report No. DOT HS 812 069). Washington, DC: National Highway Traffic Safety Administration. Link: *https://crashstats.nhtsa.dot.gov/Api/Public/ViewPublication/812069.*

[3] NHTSA conducted an analysis of the Fatality Analysis Reporting System (FARS) data files of real world fatal non-rollover frontal and side crashes of passenger cars and light trucks and vans involving children for the years 1995 to 2009. From this analysis, the agency estimated the effectiveness of CRSs in preventing fatalities among 0- to 3-year-old children to be 42 percent in side crashes and 53 percent in frontal crashes. The analysis method is similar to that reported in the NCSA Research Note, ''Revised Estimates of Child Restraint Effectiveness,'' DOT HS 96855 and is also detailed in the technical report in the NPRM docket (*https://www.regulations.gov/document/NHTSA-2014-0012-0002*).

[4] Standard No. 213 specifies the use of test dummies representing a newborn, a 12-month-old, 3- and 6-year-old, weighted 6-year-old, and 10-year-old child. The ATDs other than the newborn are equipped with instrumentation measuring crash forces, but NHTSA restricts some measurements from the weighted 6-year-old and 10-year-old dummies due to technical limits of the dummies.

[5] Head excursion refers to the distance the dummy's head translates forward in FMVSS No. 213's simulated frontal crash test.

[6] These types of child restraint systems are defined in FMVSS No. 213.

[7] As explained in more detail below, NHTSA published an NPRM on November 2, 2020 (85 FR 69388) to amend the standard seat assembly in FMVSS No. 213 ''to better simulate a single representative motor vehicle rear seat.'' Among other matters, the NPRM proposes replacing the lap belt test with a lap and shoulder belt (Type 2 belt) test.

[8] Commonly called ''LATCH,'' which refers to *L*ower *A*nchors and *T*ethers for *Ch*ildren, an acronym developed to refer to the child restraint anchorage system required by FMVSS No. 225 for installation in motor vehicles (49 CFR 571.225, ''Child restraint anchorage systems''). A child restraint anchorage system consists of two lower anchorages, and one upper tether anchorage. Each lower anchorage includes a rigid round rod, or ''bar,'' onto which a hook, a jaw-like buckle or other connector can be snapped. The bars are located at the intersection of the vehicle seat cushion and seat back. The upper tether anchorage is a ring-like object to which the upper tether of a child restraint system can be attached. FMVSS No. 213 requires CRSs to be equipped with attachments that enable the CRS to attach to the vehicle's child restraint anchorage system.

The standard adopted by this final rule applies to child restraints for children weighing up to 18.1 kg (40 lb) or for children up to 1100 millimeters (mm) (43.3 inches, or 3 feet, 7 inches) in standing height.[9] These children would be virtually all 3-year-olds and almost all 4-year-olds. The 18.1 kg (40 lb) threshold is greater than the weight of a 97th percentile 3-year-old (17.7 kg (39.3 lb)) and is approximately the weight of an 85th percentile 4-year-old. The 1100 mm (43.3 inches) height threshold is more than the height of a 97th percentile 3-year-old (1024 mm (40.3 inches)) and corresponds to the height of a 97th percentile 4-year-old. While the standard would apply to child restraints that are recommended for use by children weighing less than 18.1 kg (40 lb) or with heights under 1100 mm (43.3 inches), as explained in a later section, the countermeasures (padding and side structure) designed into a safety seat to meet the standard may also provide side impact protection even as the child surpasses the 18.1 kg (40 lb) or 1100 mm (43.3 inches) mark. Many child safety seats are recommended for children much heavier than 18.1 kg (40 lb) or taller than 1100 mm (43.3 inches). Children kept in such seats will benefit from the countermeasures as they grow heavier than 18.1 kg (40 lb) or taller than 1100 mm (43.3 inches). NHTSA quantified the benefits of this rule for children up to age 4 but believes that children older than age 4 would benefit from this final rule as well.

This final rule adopts a dynamic sled test simulating a full-scale vehicle-to-vehicle side impact, which is the first-of-its-kind simulating both an intruding door and a longitudinal crash component. Child restraints recommended [10] for children weighing 13.6 to 18.1 kg (30 to 40 lb) are tested with an instrumented side impact test dummy representing a 3-year-old child, called the Q3s dummy.[11] Child restraints designed for children weighing up to 13.6 kg (30 lb) are tested with an established 12-month-old child test dummy (the 12-month-old Child Restraint Air Bag Interaction (CRABI) dummy).[12] The new standard requires CRSs to restrain the dummy in the side test, manage side crash forces and prevent harmful head contact with side structures. Child restraints tested with the Q3s must also limit crash forces to the dummy's chest. Following the dynamic side impact test, child restraints will be assessed for their compliance with requirements for system integrity, contactable surfaces, and buckle release, just like they are following Standard No. 213's frontal impact test.

Work Preceding This Final Rule

NHTSA published the notice of proposed rulemaking (NPRM) preceding this final rule on January 28, 2014 (79 FR 4570).[13] Enhanced side impact protection for children has long been a priority for NHTSA. NHTSA laid the necessary groundwork for this final rule over the years preceding and since the NPRM.[14]

To develop the NPRM, NHTSA examined data on the fatalities of young children to see how children are killed and injured in side crashes, the characteristics of the crashes that are injuring them, and the types of injuries they suffer. Among CRS-restrained children killed in side crashes, about 60 percent were in near-side impacts,[15] leading NHTSA to focus development on a near-side sled test. Intrusion was found to be an important causative factor for moderate to serious injury, which led NHTSA to concentrate on developing a side impact test procedure that included intrusion into the occupant space.[16] Data indicated that children restrained in child restraints exhibited more head injuries (59 percent) compared to torso injuries (22 percent) and injuries to extremities (14 percent). NHTSA used these and other data to develop the first-of-its-kind safety standard on child side impact protection involving a near-side impact with a longitudinal crash component and an intruding vehicle door.

Following publication of the NPRM, NHTSA conducted a multi-year research program from 2014 to 2016 to broaden the assessment of the Q3s in providing repeatable and reproducible test results in side impact testing. NHTSA designed a test program involving Humanetics Innovative Solutions, Inc. (a dummy manufacturer), several private dummy owners (CRS manufacturers), two independent testing labs, and NHTSA's Vehicle Research and Test Center (VRTC). This work validated the performance specifications of the NPRM, thus better ensuring that all future Q3s dummies will be uniform, and provided information for NHTSA to use in prescribing specifications for the Q3s. Information from that program refined the set of engineering drawings and the series of dummy-only impact tests used for production and qualification of the Q3s.[17] The test program enabled NHTSA to produce a set of fully-vetted engineering specifications and an objective set of qualification standards. These materials guarantee a high level of uniformity in any conforming Q3s unit used to assess CRS performance in a side impact test.

Through research from 2015 to 2017, NHTSA adjusted the side impact sled test assembly to reduce variability in results and more closely align the assembly with current vehicle seats. In 2017, NHTSA undertook fleet testing to obtain current data of CRS performance in side impacts using the refined side impact seat assembly. These research projects are discussed in detail in sections below in this preamble.

FMVSS No. 214 and No. 226

FMVSS No. 214 played a critical role in developing this final rule. NHTSA designed the side impact test to replicate the FMVSS No. 214 moving deformable barrier (MDB) test, as the MDB test simulates a full-scale severe intersection collision of an impacting vehicle (represented by a 1,360 kg (3,000 lb) MDB) traveling at 48.3 km/h (30 mph) striking the side of a test vehicle traveling at 24 km/h (15 mph).[18] The MDB test replicated in this final rule involves a change of velocity of

[9] The agency added a height provision to make the new standard's applicability clear to booster seat manufacturers who choose not to label their restraints with a weight recommendation. Although all current belt-positioning boosters are labeled with both height and weight recommendations, FMVSS No. 213 permits manufacturers of belt-positioning booster seats to delete the reference to maximum weight (see FMVSS No. 213, S5.5.2(f)). In view of that provision, for manufacturers that only provide a height limit, the application section of FMVSS No. 213a will be clear as to the applicability of the standard to their restraints. When this final rule preamble refers to a ''40 lb weight limit'' we mean the term to be synonymous with a height limit of 1100 mm for belt-positioning boosters that only provide a height limit.

[10] When we describe a child restraint as ''recommended for'' children of a certain height or weight range, we mean the child restraint manufacturer is manufacturing for sale, selling or offering the CRS for sale as suitable for children in that height or weight range.

[11] The Q3s is NHTSA's first child test dummy designed for side impacts. NHTSA published a final rule on November 3, 2020 that adopted the Q3s into NHTSA's regulation for anthropomorphic test devices. 85 FR 69898.

[12] 49 CFR part 572, subpart R.

[13] Docket No. NHTSA 2014–0012.

[14] An overview of NHTSA's work developing FMVSS No. 213a can be found in section IX of the January 28, 2014 NPRM, 79 FR at 4579–4590.

[15] See NPRM for this final rule, 79 FR 4570, Table 6. The NPRM also noted that among CRS-restrained children with moderate to higher severity injuries in side crashes, over 60 percent were in near-side impacts (Table 8).

[16] Sherwood, *see* footnotes 40, 43 and 44 of the NPRM.

[17] The drawings describe every part on the dummy and may be used to inspect dummies purchased from a dummy manufacturer. The impact tests used by CRS manufacturers and other end-users serve as a final check to ensure that the assembled dummy will perform as prescribed by NHTSA in 49 CFR part 572.

[18] FMVSS No. 214 MDB test (49 CFR 571.214, S7).

approximately 30.5 km/h (19 mph). NHTSA's analysis of field data (NASS–CDS 1995–2009) found that 92 percent of near-side crashes for restrained children (0 to 12 years-old) involved a change in velocity of 30.5 km/h (19 mph) or lower.

NHTSA designed this rule to account for the safety countermeasures installed in vehicles to meet FMVSS No. 214 as practicably possible, to make a realistic assessment of how a CRS will perform when subjected to a side crash in the real world. To achieve this, NHTSA used compliance test data from MDB tests where the vehicle passed the FMVSS No. 214 test, to replicate the characteristics of passenger-carrying vehicles on the road. Furthermore, NHTSA designed FMVSS No. 213a to replicate a collision of the striking MDB with a small vehicle rather than a larger vehicle. NHTSA sought to replicate the characteristics of a small passenger car, as opposed to a larger vehicle, because smaller cars generally present a more demanding side impact test condition than larger vehicles, since smaller cars generally have a higher change in velocity than larger ones when impacted by the same MDB. Testing child restraints under the more severe condition better ensures they will provide the threshold level of protection required by the standard in both small cars and large cars than if they were assessed under conditions replicating large cars alone.

Standard No. 214's pole test and FMVSS No. 226, *Ejection mitigation,*[19] were also integral to development of this final rule. To meet the pole test, manufacturers equip passenger vehicles with side air bags in front seating positions to protect against unreasonable risk of head and chest injuries. To meet the pole test and FMVSS No. 226 requirements, manufacturers install side curtain air bags[20] to deploy in both side impacts and in rollovers, and design them to cover all side windows at the vehicle's front, second and third rows, from the roof line to the window sill. Consequently, vehicles are currently produced with side curtain air bags that cover the entire side window for front and rear row seats in both side impacts and rollovers. NHTSA developed FMVSS No. 213a recognizing that these side curtain air bags can protect passengers in rear seating positions against unreasonable risk of head injury in side impact crashes, including older children in booster seats.

Details of This Final Rule

The side impact sled test adopted by this final rule tests child restraints in a manner that simulates the vehicle acceleration and intruding door in a realistic side impact.[21] The test seat assembly on which a CRS is tested replicates the rear seating position nearest to the side impact (near-side impact), as data show near-side impacts are more injurious than far-side impacts, accounting for 81 percent of moderate-to-critical injuries to restrained 0- to 3-year-old children involved in side crashes. Most of these moderate-to-critical injuries in near-side impacts are due to impact with interior surfaces in the vehicle, and in near-side impacts, the interior surface is usually the intruding door.[22] In far-side impacts, the impact surfaces vary considerably depending on the crash dynamics, and therefore are difficult to characterize. For these reasons, standards established worldwide for side impact protection of children focus on near-side impacts, and FMVSS No. 214's moving deformable barrier and pole tests involve only near-side impacts.

This final rule applies to CRSs designed to seat children weighing up to 18.1 kg (40 lb). NHTSA did not specify a limit above 18.1 kg (40 lb) because there is no side impact dummy representative of children weighing more than 18.1 kg (40 lb) that is proven to provide the reliable test measurements required of a test instrument used in the FMVSSs.[23] NHTSA is concerned that, without a valid test dummy, CRSs for heavier children may ''pass'' a side impact test with a smaller dummy but the dummy would not meaningfully assess the performance of the CRS in protecting a larger child. Raising the limit above 18.1 kg (40 lb) could engender a false sense of security that the CRS adequately protects the heavier (larger) children when, in fact, the assessment of performance was meaningless.

NHTSA also decided to adopt a 40-lb weight limit after considering the overall side impact protection provided by the FMVSSs and the ongoing and potential work on child restraint safety. As explained above, FMVSS No. 214's side impact tests were highly important to NHTSA's design of FMVSS No. 213a and implementation of MAP–21. Children over 40 lb would be provided side impact protection by remaining in a CRS meeting FMVSS No. 213a for as long as the manufacturer recommends, which typically exceeds a weight above 40 lb.[24] When children outgrow their safety seats, they transition to a booster seat, which on average raises a seated child by 82 mm (3.22 inches),[25] which would position the child high enough to benefit from the vehicle's side curtain air bags installed to meet Standards Nos. 214 and 226.

On November 2, 2020, NHTSA proposed to update FMVSS No. 213's frontal impact test requirements, including the seat assembly and other changes to the standard.[26] In that

[19] FMVSS No. 214, S9. The pole test protects against side crashes of passenger vehicles into structures such as telephone poles and trees. It is a near-side impact. NHTSA established FMVSS No. 226 (49 CFR 571. 226) in 2011 (76 FR 3212). The standard was phased in starting in 2013, with full compliance required for vehicles manufactured on or after September 1, 2017.

[20] In the final rule adopting the pole test into FMVSS No. 214, NHTSA anticipated that side curtain air bags installed to meet FMVSS No. 214 would also be the countermeasure to meet the then-pending ejection mitigation standard. NHTSA anticipated side impact curtain air bags would extend to rear seating positions, and that occupants in rear seating positions would benefit from the side curtain air bags in side impacts. NHTSA stated: ''We believe that manufacturers will install curtains in increasing numbers of vehicles in response to this [FMVSS No. 214] final rule, the voluntary commitment, and in anticipation of NHTSA's ejection mitigation rulemaking. The curtains will provide head protection to front and rear seat occupants in side impacts.'' 72 FR 51911, 51933; Sept. 11, 2007.

[21] Data show that door intrusion is a causative factor for moderate and serious injury to children in side impacts. Arbogast, *supra.*

[22] Arbogast, et al., ''Injury Risks for Children in Child Restraint Systems in Side Impact Crashes'' (2004); Arbogast, et al., ''Protection of Children Restrained in Child Safety Seats in Side Impact Crashes'' (2010); McCray et al., ''Injuries to Children One to Three Years Old in Side Impact Crashes'' (2007).

[23] As noted earlier, the final rule applies to CRSs designed for children weighing up to 18.1 kg (40 lb) and with standing height up to 1100 mm (43.3 inches), which covers more than 97 percent of 3-year-old children and about 85 percent of 4-year-old children. The Q3s child dummy has weight and height representative of an average 3-year-old child.

[24] Out of the 107 models of forward-facing CRSs with internal harness (convertibles, combination and all-in-one CRSs) in the market, 85.9% have a maximum weight recommendation of 65 pounds, 10.2% have a maximum weight recommendation of 40 pounds and only 3.7% have a 50 pound maximum weight recommendation.

[25] The agency determined the height that a booster seat raises a seated child (boosting height) by measuring the difference in the H-point (marker on the hip) of the HIII–6-year-old dummy when the dummy is seated on the side impact seat assembly specified in this final rule (SISA) with no booster seat and when the dummy is seated on the SISA in a booster seat. The boosting height measured for 15 booster seat models ranged from 43 mm (1.69 inches) to 104 mm (4.09 inches) with an average boosting height of 83 mm (3.26 inches). A document with the measurements is docketed with this final rule.

[26] 85 FR 69388, November 2, 2020, Docket NHTSA–2020–0093. Section 31501(b) of MAP–21 Subtitle E, directed NHTSA to undertake rulemaking to amend the standard seat assembly in FMVSS No. 213 ''to better simulate a single representative motor vehicle rear seat.'' Among other matters, as part of updating the standard seat assembly, the NPRM proposed replacing the lap belt currently on the test assembly with a lap and

Continued

NPRM, NHTSA proposed that booster seats must be labeled as suitable only for children weighing more than 18.1 kg (40 lb).[27] This final rule is consistent with that proposal to ensure that children remain in car seats providing side impact protection longer, and will transition to booster seats only when they are large enough to take advantage of the vehicle's side air bag countermeasures.

Estimated Benefits and Costs

NHTSA estimates that this final rule will reduce 3.7 fatalities and 41 (40.9) non-fatal injuries (MAIS [28] 1–5) annually (see Table 1 below).[29] The equivalent lives and the monetized benefits were estimated in accordance with guidance issued in March 2021 by the Office of the Secretary [30] regarding the treatment of value of a statistical life in regulatory analyses. This final rule is estimated to save 15.1 equivalent lives annually. The monetized annual benefits of this final rule at 3 and 7 percent discount rates are $169.0 million and $152.2 million, respectively (Table 2). NHTSA estimates that the annual cost of this final rule is approximately $7.37 million. The countermeasures may include larger wings and padding with energy absorption characteristics that cost, on average, approximately $0.58 per CRS designed for children in a weight range that includes weights up to 40 lb (both forward-facing and rear-facing) (Table 3 below). The annual net benefits are estimated to be $144.8 million (7 percent discount rate) to $161.6 million (3 percent discount rate) as shown in Table 4. Because this final rule is cost beneficial just by comparing costs to monetized economic benefits, and there is a net benefit, NHTSA has not provided a net cost per equivalent life saved as there is no additional value provided by such an estimate.

TABLE 1—ANNUAL ESTIMATED BENEFITS

Fatalities	3.7
Non-fatal injuries (MAIS 1 to 5)	41 (40.9)

TABLE 2—ESTIMATED MONETIZED BENEFITS

[In millions of 2020 dollars]

	Economic benefits	Value of statistical life	Total benefits
3 Percent Discount Rate	$26.24	$142.72	$168.97
7 Percent Discount Rate	23.63	128.53	152.16

TABLE 3—ESTIMATED COSTS

[2020 Economics]

Average cost per CRS designed for children in a weight range that includes weights up to 40 lb	$0.58.
Total annual cost	7.37 million.

TABLE 4—ANNUALIZED COSTS AND BENEFITS

[In millions of 2020 dollars]

	Annualized costs	Annualized benefits	Net benefits
3% Discount Rate	$7.37	$168.97	$161.60
7% Discount Rate	7.37	152.16	144.79

How This Final Rule Differs From the NPRM

For the convenience of the reader, the notable changes from the NPRM are described below. They are explained in detail in relevant sections throughout this preamble. More minor changes (*e.g.,* positioning the arm of the Q3s) are not highlighted below but are discussed in the sections of this preamble relating to the topic.

- The side impact seat assembly (SISA) specified in this final rule is slightly different from the proposed

shoulder belt. MAP–21 requires NHTSA to issue a final rule adopting an updated seat assembly.

[27] 85 FR at 69427, col. 3. NHTSA currently recommends that children riding forward-facing should be restrained in CRSs with internal harnesses (car safety seats) as long as possible before transitioning to a booster seat. *https://www.nhtsa.gov/equipment/car-seats-and-booster-seats#age-size-rec.* FMVSS No. 213 currently permits booster seats only to be recommended for children weighing at least 13.6 kg (30 lb) (S5.5.2(f)). Based on an analysis of field data and other considerations, NHTSA believes the 13.6 kg (30 lb) value should be raised. Thirty pounds corresponds to the weight of a 50th percentile 3-year-old, and to the weight of a 95th percentile 18-month-old; *i.e.,* children too small to be safely protected in a booster seat. In the November 2, 2020 NPRM, NHTSA proposed to amend S5.5.2(f) to raise the 13.6 kg (30 lb) limit to 18.2 kg (40 lb), which is greater than the weight of a 97th percentile 3-year-old (17.7 kg (39.3 lb)) and approximately the weight of an 85th percentile 4-year-old.

[28] MAIS (Maximum Abbreviated Injury Scale) represents the maximum injury severity of an occupant based on the Abbreviated Injury Scale (AIS). AIS ranks individual injuries by body region on a scale of 1 to 6: 1 = minor, 2 = moderate, 3 = serious, 4 = severe, 5 = critical, and 6 = maximum (untreatable). MAIS 3 + injuries represent MAIS injuries at an AIS level of 3, 4, 5, or 6.

[29] NHTSA has developed a Final Regulatory Impact Analysis (FRIA) that discusses issues relating to the potential costs, benefits, and other impacts of this regulatory action. The FRIA is available in the docket for this final rule and may be obtained by downloading it or by contacting Docket Management at the address or telephone number provided at the beginning of this document.

[30] *https://www.transportation.gov/office-policy/transportation-policy/revised-departmental-guidance-on-valuation-of-a-statistical-life-in-economic-analysis.*

SISA in four ways: aspects of the representative vehicle seat cushion (characteristics of the seat foam), the height of the seat back, location of the child restraint anchorages and seat belts, and vertical position of the door and armrest. These changes were made to make it easier to source foam, and to reflect real-world vehicle seats more accurately. The changes align with the November 2, 2020 NPRM that proposes to update FMVSS No. 213's frontal impact test seat assembly.[31] Stiffening structures were also added to the sliding seat to minimize vibrations in compliance testing.

• The tolerance in the relative velocity (V_0) between the sliding seat and the door assembly at time of initial contact (T_0) is reduced in the final rule from the proposed 31.3 ± 0.8 km/h to 31.3 ± 0.64 km/h to improve repeatability and reproducibility of the test.

• The NPRM proposed that the test platform velocity during the time of interaction of the door with the CRS would be no greater than V_0 and not less than $V_0 - 1$ km/h. This final rule specifies the test platform velocity as no lower than 2.5 km/h less than its velocity at time = T_0. This change provides more flexibility to different test facilities to meet the test specifications while maintaining satisfactory test repeatability and reproducibility.

• This final rule includes specifications for a relative door velocity corridor (the velocity of the simulated door assembly relative to the sliding seat) to improve the repeatability and reproducibility of the test procedure. NHTSA requested comment in the NPRM on the merits of a corridor and decided, after reviewing the comments, that a corridor increases the repeatability and reproducibility of the test when different types of sled systems[32] are used.

• NHTSA tentatively believed in the NPRM that CRS performance would not be affected if a CRS were attached to the SISA by a seat belt or by the child restraint anchorage system, assuming that a seat belt would be routed through a belt path near to where the anchorage attachment points are located. NHTSA thus proposed to test child restraints by attaching them only by the child restraint anchorage system, and requested comment on the issue. Several commenters supported testing with the seat belt attachment in addition to the child restraint anchorage system attachment. After considering the comments, and after observing that some newer child restraint designs have belt paths no longer near the CRS's anchorage attachment points, NHTSA has included a test configuration using a Type 2 seat belt (lap and shoulder belt) with the CRS's top tether attached, if provided.

• The NPRM proposed using the 12-month-old CRABI dummy to test child restraints recommended for children weighing 5 to 10 kg (11 to 22 lb) and the Q3s dummy (representative of a 3-year-old child) to test child restraints for children weighing 10 to 18.1 kg (22 to 40 lb). After reviewing comments on this issue, NHTSA has decided to raise the 10 kg (22 lb) dividing line to 13.6 kg (30 lb) so that infant carriers would not be subject to testing with the Q3s 3-year-old dummy.[33] Testing with the Q3s does not make sense as the dummy is too large to fit an infant carrier and is not representative of the children for whom the restraint is recommended. Testing infant carriers with only the CRABI 12-month-old dummy better aligns the standard's test requirements with real world use of the restraints.[34]

II. Safety Need

The motor vehicle occupant fatality rate among children 3-years-old[35] and younger has declined from 4.5 in 1975 to 1.1 in 2019 (per 100,000 occupants). This decline in fatality rate is partially attributed to the increased use of child restraint systems. The 2019 National Survey of the Use of Booster Seats (NSUBS) found that restraint use in the rear row (excluding third or further rows) was 98 percent for children less than 1-year-old, 95 percent for 1- to 3-year-old, and 88 percent for 4- to 7-year-old.[36]

According to the 2019 FARS data files, there were 36,096 persons killed in motor vehicle crashes in 2019, 177 of whom were children aged 3 and younger killed in passenger vehicle crashes. Among the 177 child occupant fatalities, 44 (25 percent) were unrestrained, 7 (4 percent) were restrained by vehicle seat belts, 111 (63 percent) were restrained in CRSs, and 13 (7 percent) had unknown restraint use.[37]

In 1996, the agency estimated the effectiveness of CRSs and found the devices to reduce fatalities by 71 percent for children younger than 1-year-old and by 54 percent for toddlers 1- to 4-years-old in passenger vehicles.[38] For this rulemaking, the agency updated the 1996 effectiveness estimates by conducting a similar analysis using the FARS data files for the years 1995–2009.[39] In the updated analysis,[40] only non-rollover frontal and side crashes of passenger cars and LTVs were considered. CRS effectiveness was estimated for each crash mode. Due to small sample size of unrestrained children less than 1-year-old, the 0- to 1-year-old age group was combined with the 1- to 3-year-old age group for determining CRS effectiveness for each crash mode. The results indicate that in non-rollover frontal crashes, CRSs currently in use are 53 percent effective in preventing fatalities among children 0- to 3-years-old and 43 percent effective among children 4- to 7-years-old. In non-rollover side crashes, CRSs currently in use are 42 percent effective in preventing fatalities among 0- to 3-year-old children and 51 percent effective among 4- to 7-year-old children.

NHTSA estimates that the lives of 325 children 3-years-old and younger were saved in 2017 due to the use of child restraint systems.[41]

Failure to use proper occupant restraints is a significant factor in a large

[31] 85 FR 69388, *supra.*

[32] There are acceleration and deceleration type sled systems. An acceleration sled is accelerated from rest to a prescribed acceleration profile to simulate the occupant compartment deceleration in a crash event. In comparison, a deceleration sled is first accelerated to a target velocity and then is decelerated to a prescribed deceleration profile to simulate the same event.

[33] An infant carrier is a rear-facing CRS designed to be easily used inside and outside of the vehicle. They typically are sold for use by children in a weight range from newborn to 18.5 kg (40 lb). An infant carrier is designed to be easily removed from the vehicle and has a carrying handle that allows caregivers to tote the infant outside of the vehicle without having to remove the child from the restraint system. Some come with a base that stays inside the vehicle, enabling a simple means of reattaching the carrier when it is used as a CRS. This change is consistent with the November 2, 2020 NPRM on FMVSS No. 213's frontal crash test requirements.

[34] This statement assumes the carriers are not designed to accommodate child weights over 13.6 kg (30 lb).

[35] As used in this document, ''children 3-years-old and younger'' includes children up to the day before they turn 4-years-old.

[36] Enriquez, J. (2021, May). The 2019 National Survey of the Use of Booster Seats (Report No. DOT HS 813 033). National Highway Traffic Safety Administration. *https://crashstats.nhtsa.dot.gov/Api/Public/ViewPublication/813033.*

[37] Children, Traffic Safety Facts—2009 data, DOT HS 811 387, NHTSA, *https://crashstats.nhtsa.dot.gov/Api/Public/ViewPublication/811387.*

[38] ''Revised Estimates of Child Restraint Effectiveness,'' Research Note, *supra.*

[39] Details of the analysis method are provided in the supporting technical document in the docket for the NPRM.

[40] Details of the updated analysis are provided in the supporting technical document in the docket for the NPRM.

[41] National Center for Statistics and Analysis (2019, March). *Lives saved in 2017 by restraint use and minimum-drinking-age laws* (Traffic Safety Facts Crash·Stats. Report No. DOT HS 812 683). Washington, DC: National Highway Traffic Safety Administration. Available at: *https://crashstats.nhtsa.dot.gov/Api/Public/ViewPublication/8126834.*

number of child occupant fatalities resulting from motor vehicle crashes. In addition, fatalities among children properly restrained in child restraints are often attributed to the severity of the crash. Sherwood [42] examined the FARS database for the year 2000 and determined that there were 621 child occupant fatalities in the age range of 0 to 5 years. Among these 621 fatalities, 143 (23 percent) children were reported to be in child restraints. Detailed police reports were available for 92 of the 143 fatally injured children restrained in CRSs. Sherwood examined these 92 police reports and determined that half of the 92 fatalities were in un-survivable crashes, 12 percent of the fatalities were judged to result from gross misuse of child restraints, 16 percent in non-catastrophic side impacts, and 13 percent in non-catastrophic frontal impacts. Sherwood noted that side impacts accounted for the largest number of fatalities (40 percent), and in all side impact crashes involving child fatalities, there was vehicle intrusion at the child's seating position.

In-Depth Study of Fatalities Among Child Occupants

The agency further examined the real-world crash databases managed by the agency (FARS (2015–2019) and the National Automotive Sampling System-Crashworthiness Data System (NASS–CDS) 2001–2015) to better understand fatalities to children restrained in child restraints when involved in side crashes.

First, NHTSA categorized the crash cases involving children (0- to 12-years-old) seated in rear seating positions, by restraint use, crash type, and child age. See Tables 5 and 6, below.

TABLE 5—AVERAGE ANNUAL CRASH FATALITIES AMONG CHILDREN 0- TO 12-YEARS-OLD IN REAR SEATING POSITIONS OF LIGHT PASSENGER VEHICLES CATEGORIZED BY RESTRAINT TYPE AND AGE

[FARS 2015–2019]

Restraint	Age (years)				Total
	Under 1	1–3	4–7	8–12	
None	7.2	24.6	50.6	67.0	149.4
Adult Belt	0.8	8.2	36.8	77.0	122.8
CRS	40.6	96.6	69.2	6.4	212.8
Unknown	3.2	9.4	15.0	12.4	40.0
Other	0.0	0.2	0.6	0.4	1.2
Total	51.8	139.0	172.2	163.2	526.2

Annually on average between 2015 and 2019, there were 526 crash fatalities among children 0- to 12-years-old seated in rear seating positions of light vehicles. Among these fatalities, on average 213 (40 percent) were children restrained in CRSs (137 were 0- to 3-years-old and 76 were 4- to 12-years-old). Nearly 64 percent of the CRS restrained child fatalities were children 0- to 3-years-old.

As shown in the last column of Table 6, among the 213 fatalities of children 0- to 12-years-old restrained in rear seats of light passenger vehicles and in CRSs, approximately 31 percent occurred in frontal crashes, 25 percent in side crashes, 22 percent in rollovers, and 19 percent in rear crashes. Approximately 55 percent of side impact fatalities (28.8/52.2) were in near-side impacts. (''Far-side'' position means the outboard seating position on the opposite side of the point of impact or the center seating position.)

TABLE 6—AVERAGE ANNUAL CRASH FATALITIES AMONG CHILDREN 0- TO 12-YEARS-OLD IN REAR SEATING POSITIONS OF LIGHT PASSENGER VEHICLES AND RESTRAINED IN CRSS BY CRASH MODE AND AGE

[FARS 2015–2019] [43]

Crash mode	Age (years)				Total	Percent total
	<1	1–3	4–7	8–12		
Rollover	8.0	21.8	15.4	1.6	46.8	22.0
Front	13.6	30.8	21.4	0.8	66.6	31.3
Side	10.2	23.4	16.2	2.4	52.2	24.5
Near-side	6.2	11.6	9.2	1.8	28.8	13.5
Far-side	3.8	11.4	6.8	0.6	22.6	10.6
Unknown-side	0.2	0.4	0.2	0.0	0.8	0.4
Rear	7.8	17.0	14.0	1.6	40.4	19.0
Other	0.4	2.0	1.0	0.0	3.4	1.6
Unknown	0.6	1.6	1.2	0.0	3.4	1.6
Total	40.6	96.6	69.2	6.4	212.8	100.0

[42] Sherwood, C.P., Ferguson, S.A., Crandall, J.R., ''Factors Leading to Crash Fatalities to Children in Child Restraints,'' 47th Annual Proceedings of the Association for the Advancement of Automotive Medicine (AAAM), September 2003.

[43] The 2005–2009 FARS analysis presented in the NPRM, showed 31 percent fatalities of children 0- to 12-years-old restrained in rear seats of light passenger vehicles and in CRSs were in side impact. The 2015–2019 FARS analysis shows only 24.5 percent of fatalities in side impacts, however, the difference in the figures are attributed to the changing available variables in FARS not a decrease in side impact fatalities. The 2005–2009 FARS analysis was done using ''IMPACT2 (most damaged area)'' while the 2015–2019 was done using ''IMPACT1 (area of initial contact), as IMPACT2 was retired.

Of the side impact crash fatalities among CRS restrained children 0- to 12-years-old in rear seating positions, nearly 62 percent of near side fatalities ((6.2 + 11.6)/28.8) were to children under the age of 4.

In-Depth Study of Injuries to Child Occupants in Motor Vehicle Crashes

In 2010, the agency published an analysis of the NASS—General Estimates System (GES) data for the years 1999–2008 to better understand injuries to children in motor vehicle traffic crashes.[44] The analysis was conducted for three different child age groups (<1-year-old, 1- to 3-years-old, and 4- to 7-years-old) and for different crash modes (rollover, front, side, and rear). The analysis indicated that CRSs are effective in reducing incapacitating injuries in all three child age groups examined and in all four crash modes. The analysis found that rollover crashes accounted for the highest rate of incapacitating injuries, with the incidence rate among unrestrained children (26 percent) being nearly 3 times that for children restrained in CRSs (9 percent). In near-side impact crashes, unrestrained children (incidence rate = 8 percent) were 8 times more likely to sustain incapacitating injuries than children in CRSs (incidence rate = 1 percent).

The agency analyzed NASS–CDS for the years 2001–2015 to obtain annual estimates of moderate or higher severity injuries (MAIS 2+ injuries) among children of different ages in different restraint environment and crash modes. See Table 7 and 8.

TABLE 7—AVERAGE ANNUAL ESTIMATES OF 0- TO 12-YEARS-OLD CHILDREN WITH MAIS 2+ INJURIES IN REAR SEATING POSITIONS OF LIGHT PASSENGER VEHICLES INVOLVED IN MOTOR VEHICLE CRASHES BY RESTRAINT TYPE

[NASS–CDS 2001–2015]

Restraint	Age (years)				Total	Percent of total
	Under 1	1–3	4–7	8–12		
None	15	94	530	575	1,214	20.0
Adult Belt	0	91	489	860	1,440	23.8
CRS	181	731	504	36	1,452	24.0
Unknown if Used	1	28	323	146	498	8.2
Total	378	1,675	2,350	1,653	6,056	100.0

Between 2001 and 2015 on average annually there were an estimated 6,056 twelve and younger children with MAIS 2 + injuries seated in the rear seats of light passenger vehicles with 2,053 of these injured occupants being younger than 4- years-old. Approximately 1,452 CRS restrained children 12-years-old and younger sustained MAIS 2+injuries, among which 912 (63 percent) were children younger than 4-years-old and 504 (35 percent) were 4- to 7-year-old children.

The NASS–CDS 2001–2015 data files were further analyzed to determine crash characteristics. Table 8 presents the average annual estimates of 0- to 12-year-old children with MAIS 2+ injuries in rear seating positions of light passenger vehicles. Approximately 38 percent of the children were injured in frontal crashes, 32 percent in side crashes, 24 percent in rollover crashes and 5 percent in rear crashes.

TABLE 8—AVERAGE ANNUAL ESTIMATES OF 0- TO 12-YEARS-OLD CHILDREN WITH MAIS 2+ INJURIES IN REAR SEATING POSITIONS OF LIGHT PASSENGER VEHICLES INVOLVED IN MOTOR VEHICLE CRASHES BY CRASH MODE

[NASS–CDS 2001–2015]

Crash mode	Age (years)				Total	Percent of total
	<1	1–3	4–7	8–12		
Rollover	13	150	396	543	1,102	23.9
Front	62	329	710	658	1,759	38.2
Side	46	373	691	387	1,497	32.5
Near-Side	31	276	330	260	897	19.5
Far-Side	11	58	360	126	555	12.1
Unknown-Side	4	39	1	1	45	1.0
Rear	78	76	49	29	232	5.0
Other	0	14	0	0	14	0.3
Total	199	942	1,846	1,617	4,604	100.0

To better understand the crash characteristics of children restrained in child restraints, a similar analysis as that shown in Table 8 was conducted except that only the cases where the children were restrained in CRSs were included in the analysis. The results are presented in Table 9.

[44] Hanna, R., ''Children Injured in Motor Vehicle Traffic Crashes,'' DOT HS 811 325, NHTSA, May 2010, *http://www-nrd.nhtsa.dot.gov/Pubs/811325.pdf,* last accessed on July 2, 2012.

TABLE 9—AVERAGE ANNUAL ESTIMATES OF 0- TO 12-YEARS-OLD CRS RESTRAINED CHILDREN WITH MAIS 2+ INJURIES IN REAR SEATING POSITIONS OF LIGHT PASSENGER VEHICLES INVOLVED IN MOTOR VEHICLE CRASHES BY CRASH MODE

[NASS–CDS 2001–2015]

Crash mode	Age (years)				Total	Percent of total
	Under 1	1–3	4–7	8–12		
Rollover	12	60	102	0	174	12.0
Front	55	293	233	18	599	41.2
Side	42	323	139	18	522	35.9
Near-side	31	272	44	18	336	25.1
Far-side	11	51	95	0	157	10.8
Rear	74	54	31	0	159	10.29
Total	183	730	505	36	1,454	100.0

For MAIS 2+ injured 12-years-old and younger child occupants in passenger vehicles restrained in CRSs in rear seating positions, 41 percent of the injuries were in frontal crashes, 36 percent in side crashes, 12 percent in rollovers, and 10 percent in rear crashes. About 64 percent (336/522) of the occupants in side crashes were in near-side impacts.

In the above analyses, some of these injuries and fatalities involved children in seats that were incorrectly used. However, NHTSA does not have complete data on the number accidents that involved misuse because accident databases do not generally collect data on how child restraints were used.

III. Statutory Mandate

Subtitle E of the ''Moving Ahead for Progress in the 21st Century Act'' (MAP–21), Public Law 112–141 (July 6, 2012),[45] included Section 31501(a), which stated that, not later than two years after the date of enactment of the Act, the Secretary (NHTSA by delegation) shall issue a final rule amending Federal Motor Vehicle Safety Standard No. 213 to improve the protection of children seated in child restraint systems during side impact crashes.

This final rule accords with MAP–21 and implements Congress's intent to implement a side impact standard for child restraints. In 2004, NHTSA informed Congress[46] that, while enhanced side impact protection for children in child restraints was a priority for NHTSA, NHTSA had initiated a side impact rulemaking in response to the Transportation Recall Enhancement, Accountability and Documentation (TREAD) Act but found the extent of the uncertainties prevented adoption of a side impact performance test for CRSs.[47] NHTSA informed Congress when the agency withdrew the rulemaking that NHTSA would continue its efforts to obtain detailed side crash data identifying specific injury mechanisms involving children and would work toward developing countermeasures using test dummies, including the European Q3 dummy then available, for improved side impact protection.

In March 2011, NHTSA's Vehicle Safety and Fuel Economy Rulemaking and Research Priority Plan 2011–2013, announced the agency's intention to issue an NPRM in 2012 on child restraint side impact protection.[48] NHTSA stated in the plan that it was planning to ''[p]ropose test procedures in FMVSS No. 213 to assess child restraint performance in near-side impacts. Amend Part 572 to add the Q3s dummy, the 3-year-old side impact version of the Q-series of child dummies.''

MAP–21 was enacted soon thereafter, with a short deadline for issuance of a final rule. Given the context of NHTSA's work in this area, NHTSA has interpreted Subtitle E as directing NHTSA to apply the knowledge gained since its 2004 report to Congress to initiate and complete the side impact regulation as the agency had planned. There were no child test dummies other than the Q3s available when MAP–21 was enacted that were proven sufficiently durable and reliable for use in the FMVSS No. 213 side impact test.[49] There was not enough time to develop and validate a different test procedure, or new child side impact test dummies, within the time constraints of Subtitle E.

MAP–21 required a final rule ''amending FMVSS No. 213,'' which NHTSA has interpreted to mean that the rulemaking must be conducted in accordance with the National Traffic and Motor Vehicle Safety Act (49 U.S.C. 30101 *et seq.*) (Safety Act). NHTSA has developed a standard that will improve the protection of children seated in child restraint systems during side impacts, in accordance with MAP–21, while meeting the criteria of Section 30111 of the Safety Act. Standard No. 213a meets the need for safety, is stated in objective terms, and is reasonable, practicable, and appropriate for the CRSs for which it is prescribed. There are technical and practical reasons for applying the dynamic side impact test only to CRSs designed to seat children in a weight range that includes weights up to 18.1 kg (40 lb).

For one, there is no side impact dummy representative of children weighing more than 40 lb that is proven to provide the test measurements required of a dummy used in the Federal motor vehicle safety standards. Without an appropriate test dummy, the data from a dynamic test would not provide a meaningful assessment of the performance of the CRS in protecting children of weights above 18.1 kg (40 lb). Without a valid test dummy, CRSs for heavier children may ''pass'' a side impact test with the Q3s, but the Q3s would not meaningfully assess the performance of the CRS in protecting the heavier child. Raising the limit above 40 lb could engender a false sense of security that a restraint adequately protects the heavier children when, in fact, without a heavier test dummy, the standard would not be adequately assessing the restraint's protection of these children. NHTSA believes Congress was aware of this limitation on the availability of test dummies when it enacted MAP–21, and did not want

[45] Subtitle E is entitled ''Child Safety Standards.''

[46] NHTSA Report to Congress, ''Child Restraint Systems, Transportation Recall Enhancement, Accountability, and Documentation Act,'' February 2004. *www.nhtsa.gov/nhtsa/announce/NHTSAReports/TREAD.pdf.*

[47] Advance Notice of Proposed Rulemaking, 67 FR 21836, May 1, 2002.

[48] Docket No. NHTSA–2009–0108–0032.

[49] There are still no child test dummies that are suitable for use in a side impact FMVSS other than the Q3s.

NHTSA to apply the new standard to a subset of CRSs that could not be sufficiently assessed for their performance in protecting a child in a side impact. Moreover, it does not seem sensible to require manufacturers to ensure their CRSs comply with the standard tested with the Q3s if the child restraints are not intended for, and will not be used with, children of the size represented by the Q3s. Thus, NHTSA does not consider it reasonable or appropriate [50] to apply this final rule to child restraints that are not recommended for children weighing between 13.6 kg (30 lb) and 18.1 kg (40 lb).

In addition, NHTSA drafted this final rule recognizing that children weighing more than 18.1 kg (40 lb) seated in a child restraint will be seated high enough to benefit from a passenger vehicle's side curtain air bags.[51] In the November 2, 2020 NPRM proposing to amend FMVSS No. 213, *supra,* NHTSA proposed requiring booster seats to be labeled only for children weighing more than 18.1 kg (40 lb). If, because of that label, children are kept in safety seats until they are at least 18.1 kg (40 lb), they will be seated until that time in a CRS that will be certified to the side impact protection requirements of FMVSS No. 213a. Also, when they transition to a booster seat (or a child restraint with an internal harness intended for children weighing more than 18.1 kg (40 lb)), such booster seat or child restraint will lift them high enough to be protected by the vehicle's side curtain air bags. That label will help ensure that children will remain in car seats longer and will only use booster seats when they are tall enough to take advantage of a vehicle's side protection countermeasures.

IV. Guiding Principles

In addition to the considerations already discussed, the following principles also guided NHTSA's decisions in developing this final rule.

1. There is a safety need for this rulemaking notwithstanding the estimated effectiveness of child restraints in side impacts.[52] Child restraint safety in side impacts can be increased. NHTSA has observed that increasing numbers of CRSs appear to have more side structure coverage (CRS side ''wings'') and side padding than before.[53] Because the design of the side wings and stiffness of the padding are factors that affect the containment of the child dummy and the injury measures, NHTSA considers the side wing coverage and increased padding to be overall positive developments. However, because FMVSS No. 213 did not have a side impact test, a quantifiable assessment of the protective qualities of the features was heretofore not possible. Further, testing NHTSA conducted in developing this final rule indicate that not all side wings and padding protect the same, and in some cases, ''more'' of a countermeasure (padding, structure) was not necessarily ''better.'' This final rule establishes performance requirements that ensure that the wings, padding, padding-like features, or other countermeasures employed to provide protection in side impacts will be engineered to attain at least a minimum threshold of performance that will reduce unreasonable risk of injury or fatality in side impacts. For CRS designs that have not yet incorporated side impact protection features, this final rule ensures they will.

2. In making regulatory decisions on possible enhancements to CRS performance, NHTSA bears in mind the consumer acceptance of cost increases to a highly effective item of safety equipment.[54] Any enhancement that would significantly raise the price of the restraints could potentially have an adverse effect on the sales and use of this equipment. The net effect on safety could be negative if the effect of sales losses exceeds the benefit of the improved performance of the restraints that are purchased, or if older child restraints that are not designed to meet current requirements were reused. Thus, to maximize the total safety benefits of its efforts on FMVSS No. 213, NHTSA must balance those improvements against impacts on the price of restraints. In addition, NHTSA must also consider the effects of improved performance on the ease of using child restraints. If the use of child restraints becomes overly complex or unwieldy, the misuse and nonuse of child restraints could increase, and the benefits engineered into the CRS not realized in the real world.

3. NHTSA is guided by the principles for regulatory decision-making set forth in Executive Order (E.O.) 12866, ''Regulatory Planning and Review,'' and E.O. 13563, ''Improving Regulation and Regulatory Review.'' NHTSA's assessment of the net effect on safety of this rulemaking was limited in some respects, however. Data are sparse on side crashes resulting in severe injuries or fatalities to children in CRSs. Data indicate that side crashes resulting in fatalities to children in CRSs mainly occur in very severe, un-survivable side impact conditions. A dynamic test involving a very high velocity impact may not be reasonable if ultimately the crash replicated were basically un-survivable, or if the standard's requirements were impracticable or resulted in CRSs that could not be used as a practical matter or used correctly. Another limiting factor was the absence of information comparing the real-world performance of ''good'' performing CRSs versus ''poor'' performing CRSs. Without these data, NHTSA had to use test data and injury curves to determine the effectiveness of possible countermeasures (*e.g.,* side wings with strategically-placed energy-absorbing padding).

V. Overview of the NPRM and Comments Received

a. Overview of the NPRM

NHTSA published the NPRM for this final rule on January 28, 2014 (79 FR 4570, Docket No. NHTSA–2014–0012). The NPRM proposed to amend FMVSS No. 213 to require CRSs designed to seat children in a weight range that includes weights up to 18.1 kg (40 lb) to meet side impact performance requirements in new FMVSS No. 213a, in addition to the requirements for frontal protection established in FMVSS No. 213.[55] We

[50] 49 U.S.C. 30111(b)(3).

[51] Children weighing more than 18.1 kg (40 lb) restrained in CRSs would have a seated height similar to the height of a 5th percentile adult female. The vehicle's side curtain air bags are designed to protect occupants, including those of the size of a 5th percentile female, in side impacts and rollovers.

[52] NHTSA estimates that CRSs are already 42 percent effective in preventing death in side crashes of 0- to 3-year-old children. *Supra.*

[53] SafetyBeltSafe U.S.A. *https://web.archive.org/web/20131012130527/http://www.carseat.org/Pictorial/InfantPict,1-11.pdf* and *https://web.archive.org/web/20120915194832/http://www.carseat.org/Pictorial/3-Five-%20Point-np.pdf.*

[54] Child restraint systems are highly effective in reducing the likelihood of death or serious injury in motor vehicle crashes. NHTSA estimates that, for children less than 1-year-old, a child restraint can reduce the risk of fatality by 71 percent when used in a passenger car and by 58 percent when used in a pickup truck, van, or sport utility vehicle (light truck). ''Revised Estimates of Child Restraint Effectiveness,'' Research Note, National Center for Statistics and Analysis (NCSA) of the National Highway Traffic Safety Administration (NHTSA), DOT HS 96855, December 1996. Child restraint effectiveness for children between the ages 1- to 4-years-old is 54 percent in passenger cars and 59 percent in light trucks. *Id.*

[55] NHTSA considered incorporating the side impact requirements into FMVSS No. 213, rather than in FMVSS No. 213a, but decided against doing so. MAP–21 directed NHTSA to undertake side and frontal impact test rulemakings in the same timeframe, with each involving different compliance schedules and different test dummies. NHTSA decided that combining the side and frontal test rulemakings into one standard (with each encompassing entirely new sled test systems and dynamic test requirements), could have made the revisions difficult to understand, particularly with

Continued

reopened the comment period on June 4, 2014, in response to a petition from the Juvenile Products Manufacturers Association (JPMA).[56]

NHTSA proposed performance requirements that child restraints must meet when tested dynamically in a sled test replicating a side crash. The NPRM proposed that child restraints would be tested while attached to a standardized seat assembly. The sled test[57] procedure was designed to replicate a two-vehicle side crash depicted in the moving deformable barrier (MDB) test of FMVSS No. 214 (striking vehicle traveling at 48.3 km/h (30 mph)) impacting the struck vehicle traveling at 24.1 km/h (15 mph). The proposed sled test simulated a near-side side impact of a small passenger car. FMVSS No. 213a's side impact test represents a crash with a change of velocity of approximately 19 mph. NHTSA's analysis of field data (NASS–CDS 1995–2009) found that 92 percent of near-side crashes for restrained children (0- to 12-years-old) involved a change in velocity of 19 mph or lower.[58]

NHTSA examined data from FMVSS No. 214 MDB compliance tests to identify kinematic characteristics of the vehicle test to replicate in the sled test environment, and proposed characteristics relating to the acceleration profile of the sliding seat (representing the struck vehicle acceleration), the door velocity at time of contact with the sliding seat (to represent the struck vehicle door velocity), and the impact angle of the door with the sliding seat (to replicate the longitudinal component of the direction of force). Comments were requested[59] on whether a relative door velocity profile (the velocity of the door relative to the sliding seat) should be specified to improve the reproducibility of the test procedure using different types of sled systems.

NHTSA proposed to apply FMVSS No. 213a to CRSs manufactured and offered for sale for children up to 18.1 kg (40 lb). The NPRM proposed that child restraint systems with integral internal harnesses (car seats or safety seats) would be attached to the side impact seat assembly (SISA) using the child restraint anchorage system on the SISA (including the top tether, if one were provided).[60] Comments were requested on whether car seats should also be tested when attached by a Type 2 belt and top tether. The NPRM proposed that child restraints that do not have connectors designed to attach to a child restraint anchorage system would be tested using a Type 2 belt (*e.g.,* booster seats recommended for children weighing less than 18.1 kg (40 lb)[61]).

NHTSA proposed that child restraint systems recommended for children with weights in the 10 kg to 18.1 kg (22 lb to 40 lb) range would be tested on the SISA with the Q3s test dummy.[62] Child restraints would have to meet injury criteria (expressed in terms of HIC15[63] and chest deflection) when tested with the Q3s dummy. These criteria allow a quantitative evaluation of the effectiveness of the CRS, and the ability of the CRS to prevent or attenuate head and chest impact with the intruding door. CRSs recommended for children with weights that include weights up to 10 kg (22 lb) would be tested with the 12-month-old CRABI dummy (49 CFR part 572, subpart R). Because the CRABI dummy is designed for frontal and not side impacts, the NPRM proposed that the CRABI would be used only to measure the containment capability of the child restraint (the ability of the restraint to prevent the dummy's head from contacting the intruding door of the SISA). The dummy's head and chest instrumentation would not be leveraged since the dummy was not designed to assess crash forces in side impacts.

The NPRM also proposed requiring child restraints to meet structural integrity and other performance requirements in FMVSS No. 213. When a CRS is dynamically tested with the appropriate ATD, there should not be any complete separation of any load-bearing structural element[64] of the CRS or any partial separation exposing surfaces with sharp edges that may contact an occupant. These requirements would reduce the likelihood that a child using the CRS would be injured by the collapse or disintegration of the system, projectiles coming from a seat involved in a side crash or by contact with the interior of the passenger compartment or with components of the CRS. NHTSA notes that while some CRS structures have not been considered load-bearing structural elements in frontal testing (FMVSS No. 213) by NHTSA, these same CRS structures may be considered load-bearing structural elements in side impact testing (FMVSS No. 213a).

Injury from contacting protrusions, such as the pointed ends of screws mounted in padding, would be prevented in a similar manner as that specified for the frontal crash test in FMVSS No. 213. The height of such protrusions would be limited to not more than 0.375 inches above any immediately adjacent surface. Also, contactable surfaces (surfaces contacted by the head or torso of the ATD) would not be permitted to have an edge with a radius of less than 6.35 mm (0.25 inches), even under padding. Padding will compress in an impact and the load imposed on the child would be concentrated and potentially injurious.

The NPRM discussed NHTSA's testing of CRS models representative of seats available then in the market. NHTSA had tested twelve forward-facing and five rear-facing child restraints with the Q3s dummy. The Q3s measured HIC15 greater than 570 in seven of the twelve forward-facing CRSs tested. The Q3s measured chest deflection greater than 23 mm in three of the twelve forward-facing CRSs tested. The Q3s measured both HIC15 greater than 570 and chest deflection greater than 23 mm in three of the tests of the forward-facing CRSs. For the five

the new requirements for the frontal and side tests becoming effective on different dates. The agency decided to establish the side impact requirements separately in FMVSS No. 213a for clarity and plain language purposes.

[56] The comment period was reopened until October 2, 2014 (79 FR 32211). JPMA petitioned to provide more time for child restraint manufacturers to obtain the Q3s dummy from the dummy manufacturer, arrange with test labs to evaluate their CRSs with it, conduct testing, and comment on the proposal.

[57] The sled test was based on an acceleration sled system. An acceleration sled is accelerated from rest to a prescribed acceleration profile to simulate the occupant compartment deceleration in a crash event. In comparison, a ''deceleration sled'' is first accelerated to a target velocity and then is decelerated to a prescribed deceleration profile to simulate the same event. The proposed acceleration sled was originally developed by the Takata Corporation. (Literature on development of the FMVSS No. 213a sled test sometimes refers to the sled as the ''Takata'' system.)

[58] Obtained from an analysis of the National Automotive Sampling System—Crashworthiness Data System (NASS–CDS) data files for the years 1995–2009 for restrained children 0- to 12-years-old in all restraint environments including seat belts and CRS. Details of the analysis are provided in the technical report in the docket for the NPRM (Docket No. NHTSA–2014–0012).

[59] 79 FR at 4585.

[60] The child restraint anchorage system is commonly referred to as the LATCH system (''Lower Anchors and Tethers for Children'').

[61] This proposal predated a November 2, 2020 NPRM in which NHTSA proposed prohibiting booster seats from being recommended for children weighing less than 18.1 kg (40 lb). If the November 2020 proposal is adopted, the FMVSS No. 213a provision would be moot.

[62] The proposed weight ranges described in this paragraph have been adjusted in this final rule. NHTSA is adopting a 13.6 kg (30 lb) cut off instead of a 10-kg (22-lb) cut off.

[63] A measurement of the head injury criterion that is based on the integration of resultant head acceleration over a 15-millisecond duration.

[64] NHTSA interprets load bearing structure to mean a structure that: (1) transfers energy from the SISA and/or door to the CRS (*e.g.,* installation components or CRS areas that contact the intruding door), or (2) transfers energy from the CRS to the occupant or vice versa (*e.g.,* belts and components to restrain the child, CRS surfaces or parts transferring energy to the occupant).

rear-facing CRSs tested with the Q3s, the results of the fleet tests showed that the Q3s measured HIC15 greater than 570 in three of the five rear-facing CRSs tested, and chest deflection greater than 23 mm in two of the five tests. The Q3s measured both HIC15 greater than 570 and chest deflection greater than 23 mm in one of the five rear-facing CRSs tested. NHTSA tested 12 rear-facing CRSs with the CRABI to estimate the performance of the fleet. Using head-to-door contact as the performance criterion in the fleet tests, the results showed that the CRABI had head contact only with one child restraint (one out of the twelve models tested).

b. Summary of the Comments

NHTSA received 29 comments on the proposal.[65] Commenters included child restraint manufacturers (Dorel Juvenile Group, Graco Children's Products, Britax Child Safety, Inc UppaBaby, Safeguard/IMMI), the Juvenile Products Manufacturers Association (JPMA); consumer advocates (Safe Ride News, Safe Kids Worldwide, Advocates for Highway and Auto Safety, Consumers Union [66]); the National Transportation Safety Board; research bodies and testing organizations (Insurance Institute for Highway Safety (IIHS), University of Michigan Transportation Research Institute (UMTRI), MGA Research Corporation, ARCCA, Inc., the Transport Research Laboratory; a supplier of honeycomb (Plascore), and members of the general public.

Overview of the Comments

As summarized below, all but four commenters [67] strongly supported the proposed inclusion of a side impact test in FMVSS No. 213. Several commenters expressed views on the types of child restraints they believed should be subject to FMVSS No. 213a. Many commenters discussed technical aspects of the proposed test procedure, such as the repeatability and reproducibility of the dynamic test, the availability of and characteristics of the seat foam specified for the SISA, how the tested CRS should be positioned on and attached to the SISA, and how the Q3s should be positioned in the child restraint,

Child restraint manufacturers: All child restraint manufacturers commenting on the NPRM supported the inclusion of a dynamic side impact test procedure in FMVSS No. 213, as did JPMA, their industry group. Some had questions about various issues and many responded to the questions NHTSA had asked in the preamble to the NPRM. Dorel supported adopting a test procedure that included an intruding door but believed that the Q3s dummy exhibited ''artificial forward head movement before the crash impact'' that places the dummy out of position in relation to the side wing. Dorel expressed concerns about the repeatability and reproducibility (R&R) of results from NHTSA's test program, as did Graco, the latter providing feedback on results of test trials it conducted comparing the R&R of the proposed side impact test using data from several different test labs. Graco evaluated potential causes of variation and recommended ways to improve the sled design to reduce variation between the labs.

Some CRS manufacturers suggested revisions to technical aspects of the proposal. Britax believed the United Nations Economic Commission for Europe Regulation No. 44 [68] (ECE R.44) foam proposed for use on the SISA is not readily available and specifying it in FMVSS No. 213a may create considerable hardship from cost and availability perspectives. Britax supported the agency's views in the NPRM about testing and labeling of belt-positioning booster seats. UPPAbaby recommended against using the Q3s dummy to test rear-facing infant seats, because, it stated, ''the head of the Q3s exceeds the limit to which we recommend a child be positioned in our seat.'' UPPAbaby supported using a lap/shoulder belt to attach car seats to the SISA, in addition to a child restraint anchorage system. IMMI supported excluding harnesses from the proposed side impact requirements and suggested ways to expand the standard's definition of a ''harness.'' JPMA reiterated Dorel's comment about ''artificial forward head movement'' of the Q3s before impact, reported instances in which the text in the preamble was inconsistent with proposed regulatory text, emphasized the importance of reproducibility of test results to the objectivity of a safety standard, and provided other information.

Consumer advocates: Safe Ride News (SRN), Safe Kids Worldwide, Advocates for Highway & Auto Safety (Advocates), and Consumers Union (CU) supported the proposed rule, while suggesting that NHTSA adopt further requirements. Several commenters weighed in with responses to the technical questions in the NPRM. Many concurred that the rule should only apply to CRSs recommended for children weighing up to 18.1 kg (40 lb) but encouraged NHTSA to develop an ATD (anthropomorphic test device) (test dummy) representative of older children. SRN, Safe Kids and CU suggested lead times less than 3 years. Advocates suggested NHTSA require various warnings on child restraints, such as a warning on CRSs recommended for children weighing more than 40 lb that ''this CRS has not been tested in side impacts.'' CU suggested additional performance criteria for structural integrity and supported testing CRSs when attached with Type 2 (lap and shoulder) belts. CU believed that the Q3s is too large to test rear-facing infant seats, and that NHTSA should consider a planar limit to reduce the potential for the dummy's head to roll out of the CRS shell in some tests.

Research and testing organizations: The Insurance Institute for Highway Safety (IIHS) agreed with NHTSA's reasons for not applying FMVSS No. 213a to CRSs for children weighing more than 18.1 kg (40 lb). IIHS provided data from its belt fit program showing that children weighing more than 18.1 kg (40 lb) seated in booster seats are likely tall enough to benefit from the vehicle side curtain air bag. IIHS and the University of Michigan Transportation Research Institute (UMTRI) had concerns about possible dis-benefits from rear-facing restraints possibly becoming wider in response to meeting FMVSS No. 213a. They believed wider restraints could potentially indirectly increase injury risk for restrained children, by, for example, causing older siblings to graduate prematurely to a booster seat because wider car seats are harder to fit side-by-side. UMTRI asked whether costs to meet the proposed standard would be better spent on efforts to restrain children. The commenter stated that half of pediatric fatalities from motor vehicle crashes are to unrestrained or improperly restrained occupants, so rather than modestly improving the side impact protection for children, efforts should address improving the number of children using appropriate restraints, enhancing child restraint ease-of-use, and increasing educational efforts, such as on top tether use. ARCCA suggested that NHTSA use the Hybrid III 6-year-old and 10-year-old

[65] The NPRM proposing to add the Q3s dummy specifications to 49 CFR part 572 received comments separately from the NPRM preceding this final rule. Those comments are fully addressed in the November 3, 2020 final rule (85 FR 69898). They are discussed here to the extent relevant to this final rule.

[66] Consumer Union is the Policy and Action Division of Consumer Reports.

[67] These were UMTRI and three individuals.

[68] ECE R44—Restraining Devices for Child Occupants of Power Driven Vehicles (''Child Restraint Systems'').

frontal crash dummies to assess head containment and structural integrity.

NTSB: The National Transportation Safety Board (NTSB) supported the NPRM, believing that the proposed tests encompass the majority of CRSs because the upper use limit for most small restraint systems extends to at least 40 pounds and the lower use limit is at or below 40 pounds. Nonetheless, NTSB urged NHTSA to develop suitable large-sized dummies. NTSB expressed concern about the kinematic effects of far-side impact crashes on larger children. NTSB also supported testing CRSs with a seat belt attachment, in addition to the child restraint anchorage system attachment. The commenter encouraged NHTSA to consider ease-of-use improvements for top tethers, and use of a pure lateral acceleration pulse in the side impact test.

Individuals: Approximately 7 individuals commented on the NPRM. Most of the individuals supported the proposal, with three opposing. One of the opposing commenters argued that the injury rates for the under 1-year-old children are nearly 4 times lower than that for the 1- to 3-year-old children, so efforts would be better spent increasing the number of 1- to 3-year-old children who ride rear-facing than on adopting a side impact standard. The others believed that the estimated benefits of the proposal are low and do not support the additional costs to industry or to the consumer.

VI. Response to the Comments (Wide-Reaching Issues)

NHTSA has carefully considered the comments in developing this final rule. This section discusses the agency's decisions on matters of general importance. Following this section are discussions relating to specific topics, such as various technical aspects of the side impact test procedure, the test dummies, the standard's performance criteria, and other aspects of FMVSS No. 213a.

a. Are efforts better spent elsewhere on child seat safety?

Almost all of the commenters supported the inclusion of a side impact test in FMVSS No. 213, but a few expressed concerns about the rulemaking. Dr. Alisa Baer suggested NHTSA's efforts, and those of the industry and/or the child passenger safety community, could be better spent on correcting misuse or nonuse of child restraints.[69] Dr. Baer argued that Table 9 of the NPRM showed ''the injury rates for the under 1-year-olds (presumably the majority of whom are rear-facing) are nearly 4 times lower than for the 1–3 year-olds (presumably the majority of whom are forward-facing).'' She stated that the benefits seem low and may not outweigh the costs of meeting the standard—costs, she said, that include not only material costs (such as foam) but also research and development and crash testing costs. The commenter said the time and money spent on ensuring CRSs comply with the standard could be better spent elsewhere, specifically, ''at decreasing the non-use rate, especially amongst minority and low-income populations.''

UMTRI and IIHS expressed concern with ''possible unintended consequences of implementing this rulemaking.'' UMTRI suggested that only forward-facing harnessed restraints be subject to the side impact standard, ''since children in rear-facing child restraints are already five times safer than those in [forward-facing] restraints in side impacts,'' citing a 2007 study by Henary et al. to support its view.[70] IIHS echoed this view, also citing Henary.

The commenters above also expressed concern that adding larger, padded side structures to meet the side impact standard may increase the overall width of child restraints and result in children prematurely moved from rear-facing restraints to forward-facing restraints, from harnessed car seats to boosters, and from center seating positions to outboard positions.

Agency Response

Increasing overall CRS use, tether use, and use of rear-facing restraints by children above age 1 are very important goals, as each of those measures can increase the number of child lives saved and injuries avoided in crashes. NHTSA is actively involved in increasing the use of CRSs and the correct use of restraint systems. These efforts include developing and distributing training videos, producing public safety announcements and various campaigns directed to caregivers of children (in English and Spanish), leveraging all communication resources (such as social media and the NHTSA website) to provide information to parents and other caregivers, and expanding and supporting the child passenger safety technician (CPST) curriculum used to train and certify CRS fitting station technicians. In addition, NHTSA's November 2, 2020 NPRM[71] takes steps forward with proposed changes to labeling requirements that are anticipated to result in more children remaining rear-facing longer, and remaining in child safety seats longer before transitioning to a booster.

To be clear, however, this final rule focuses on improving the protection provided by child restraints in side impacts and offers expanded protection of children in a critically important crash mode—a protection supplemental to the frontal crash protection the restraints currently provide. Front and side crashes account for most child occupant fatalities. MAP–21 requires NHTSA to issue a final rule to amend FMVSS No. 213 to improve the protection of children seated in child restraints in side impacts, but enhanced side impact protection for children has been a priority for NHTSA before MAP–21.[72] FMVSS No. 213a establishes a level of protection against unreasonable safety risks in side impacts that every safety seat sold in this country will have to provide and improves the protection afforded by the restraints above that currently required by FMVSS No. 213. The efforts to improve CRS use are complementary to and not inconsistent with improvements to side crash safety, and will continue. Improved performance in side crashes will not be achieved by improving CRS use alone, however. Establishing FMVSS No. 213a improves the performance of child restraints for the benefit of all children using the restraints.

NHTSA disagrees with the commenters that FMVSS No. 213a should not apply to rear-facing child restraints. Dr. Baer may have misunderstood Table 9 in the NPRM. Table 9 in the NPRM does not present injury rate and instead presents average annual estimates of Abbreviated Injury Scale (AIS) 2+ injuries.[73] Since the population of children riding in light vehicles is unknown, it is not possible to estimate injury rates. The lower annual number of injuries to children

[69] Dr. Baer stated, ''[C]urrent efforts to redesign seats to optimize protection in side impacts are misguided. I believe the primary focus should be on increasing the number of 1–3-year-olds who ride rear-facing as the data suggest that keeping our preschoolers rear-facing could have a much greater impact on reducing fatalities & injuries in restrained children than the proposed side impact standards will.''

[70] Henary, B., Sherwood, C.P., Crandall, J.R., Kent, R.W., Vaca, F.E., Arbogast, K.B., Bull, M.J. (2007) ''Car safety seats for children: rear facing for best protection.'' Injury Prevention 13:398–402. (Note: as discussed below, this article was retracted in 2016.)

[71] 85 FR 69388, *supra.*

[72] *See* NHTSA Vehicle Safety and Fuel Economy Rulemaking and Research Priority Plan 2011–2013, March 2011, discussed in the January 28, 2014 NPRM, *supra,* for this final rule (79 FR at 4572, col. 3).

[73] AIS ranks individual injuries by body region on a scale of 1 to 6: 1 = minor, 2 = moderate, 3 = serious, 4 = severe, 5 = critical, and 6 = maximum (untreatable).

under 1 year of age could be related to fewer children of this age group involved in crashes in comparison to 1- to 3-year-old children. Applying FMVSS No. 213a to both front-facing and rear-facing child restraints ensures all rear-facing child restraints will provide a level of performance determined necessary to reduce an unreasonable risk of death or injury in side impacts to restrained occupants.

UMTRI and IIHS argue that rear-facing CRSs are five times safer than forward-facing CRSs, based on a 2007 study by Henary et al.[74] NHTSA notes that the Henary study was called into question in 2016, and after further analysis, the article was retracted by the journal *Injury Prevention,* because the survey weights in the original analysis were determined to be improperly handled. In 2017, a revised analysis of the 1988–2003 data, along with an extended analysis of the data through 2015, was published by a subset of the original authorship group.[75] Their findings reveal that, although children 0 to 23 months still had lower rates of injury while rear-facing compared with forward-facing, the sample size was too small to achieve statistical significance.

Regardless of the withdrawn Henary study, NHTSA does not find the commenters' arguments persuasive. MAP–21 limits our discretion regarding rear-facing child restraints, but even in the absence of the statutory mandate, NHTSA finds a crucial need to apply FMVSS No. 213a to rear-facing CRSs. Current guidance from the American Academy of Pediatrics (AAP) and from NHTSA instruct parents that children should ride rear-facing longer, and increasing numbers of child restraints are designed to position children rear-facing longer. AAP recommends: ''All infants and toddlers should ride in a rear-facing seat until they reach the highest weight or height allowed by their car safety seat manufacturer. Most convertible seats have limits that will allow children to ride rear facing for 2 years or more.'' [76] NHTSA recommends for children 1- to 3-years-old: ''Keep your child rear-facing as long as possible. It's the best way to keep him or her safe. Your child should remain in a rear-facing car seat until he or she reaches the top height or weight limit allowed by your car seat's manufacturer.'' [77] Because of these recommendations and the advances in child seat designs, children are positioned rear-facing longer.[78] As most child occupant fatalities occur in front and side crashes, NHTSA believes it is critical that child restraints meet not only the Federal standard for frontal protection (FMVSS No. 213), but also a Federal standard for side impact protection (FMVSS No. 213a). Issuing FMVSS No. 213a guarantees the safety seats are tested and certified to a robust side impact standard when used rear-facing, and that children are provided at least a minimum level of protection against unreasonable risk of death or injury in side crashes.

b. Will child restraints become excessively large and heavy?

Dr. Baer, UMTRI and IIHS raised concerns that child restraints would get wider because of meeting FMVSS No. 213a. Dr. Baer commented that the side impact rule is ''virtually ensuring that car seats are only going to get wider and bulkier at the head area.'' The commenter believed that the increased bulk would result in parents not able to fit car seats side-by-side in rear seats, and so the oldest child will be ''put into a backless booster, as this is typically the narrowest, and least expensive, restraint available.'' UMTRI expressed concern that adding larger, padded side structures ''has potential to increase the overall width of child restraints,'' which could result in children moved from center seating positions to outboard positions. IIHS echoed this concern, and stated ''even moderate increases in size may result in fewer seats that fit in the rear seats of smaller vehicles.''

Conversely, ARCCA [79] responded to the comments to the NPRM about the potential increase in the size and weight of child restraints. ARCCA shared information gained from car seats tested pursuant to a side impact test found in European New Car Assessment Program (Euro-NCAP) consumer education program. ARCCA stated that Euro-NCAP test results are provided to the public to aid purchasers in the selection of CRSs, and that as a result of these test programs, most suppliers of European child seat manufacturers strive to score well in those tests.

ARCCA believed that FMVSS No. 213a will have minimal effect on CRS cost, weight, and width. The commenter supported its view with an example of an infant-only CRS sold in Europe and the U.S. The restraint's European version differs from the U.S. version by way of side wings with a wing depth of 4½ inches, compared to the U.S. version that has a wing depth of only 2½ inches. ARCCA stated that when tested with a 12-month-old CRABI infant dummy in accordance with the proposed ISO side impact test protocol,[80] the U.S. version failed to contain the head. The head hit the simulated intruding door, resulting in HIC values ranging from 2,577 to 4,783. In contrast, the commenter stated, the European version, with its deeper side wings, contained the head and prevented contact with the simulated intruding door, resulting in a HIC value of 827 (a 68 to 83 percent reduction in the HIC value).

[74] *Supra.*

[75] McMurry, T.L., Arbogast, K.B., Sherwood, C.P., Vaca, F., Bull, M., Crandall, J.R., Kent, R.W. ''Rear facing versus forward-facing child restraints: an updated assessment,'' 2017, Injury Prevention.

[76] *https://www.healthychildren.org/English/safety-prevention/on-the-go/Pages/Car-Safety-Seats-Information-for-Families.aspx.*

[77] *https://www.nhtsa.gov/equipment/car-seats-and-booster-seats.*

[78] Rear-facing car seat use among children 1- to 3-years-old increased significantly from 9.4 percent in 2015 to 13.7 percent in 2017. Li, H.R., & Pickrell, T. (2018, September). The 2017 National Survey of the Use of Booster Seats (Report No. DOT HS 812 617). Washington, DC: National Highway Traffic Safety Administration.

[79] Comment dated July 1, 2014. There were two comments from ARCCA.

[80] ARCCA did not provide details of the ISO test protocol. ARCCA may be referring to the test details provided in the report, ISO TR 14646:2007, ''Road vehicles—Side impact testing of child restraint systems—Review of background data and test methods, and conclusions from the ISO work as of November 2005.''

ARCCA stated that the U.S. and European versions of this infant seat were manufactured using the same plastic shell. The side wings of the European version were deepened simply by extending the expanded polystyrene (EPS) lining beyond the plastic shell. While the wings were deepened in the European version, the width of the infant seat was the same as the U.S. version. ARCCA stated that the weight increase due to the deepening of side wings was negligible (approximately one-eighth of a pound (⅛ lb)) and the increased cost for the extended EPS was minimal, less than one dollar. ARCCA believed the proposed rulemaking will significantly improve child occupant crash protection in side impacts and rollovers, and have minimal effect on CSS cost, weight, and width.

Agency Response

Data indicate that child restraints will not become excessively large or heavy due to FMVSS No. 213a, and rear-facing CRSs should not be excluded from the side impact protection requirements based on a concern about larger and wider CRS designs. As IIHS points out, only one rear-facing seat failed to contain the 12-month-old CRABI's head in NHTSA's test program described in the NPRM, which indicates that many rear-facing seats may not need to be redesigned in any way to meet FMVSS No. 213a.

Commenters Dr. Baer, UMTRI and IIHS speculated about bulkier child restraints and the consequences that the bulkiness could cause, but provided no data or other information supporting their views. In contrast, ARCCA provided information showing that the width and weight of an infant carrier sold in Europe (designed to provide side impact protection) were almost identical to the U.S. version of the model. ARCCA's information indicates side impact protection can be provided by car seats without having to increase width or weight.

After reviewing the comments, NHTSA followed up with further evaluation of whether manufacturers must widen forward-facing restraints to meet the side impact protection requirements. The agency evaluated two pairs of CRS models.[81] For each pair, one of the child restraints was advertised as providing more side impact protection than its related twin. NHTSA measured the width of each CRS at the locations where a child's head, abdomen and hips would be when restrained in the CRS. NHTSA found that, for each CRS advertised as having enhanced side impact protection features over its twin, each was wider in the upper area of the CRS near the head position.

NHTSA then conducted sled tests of the CRSs using the Q3s dummy with the CRS in the forward-facing mode. For each CRS pair, the agency observed that the HIC15 value measured by the Q3s dummy was greater for the wider CRS (see Table 10). The HIC15 measurements of the Q3s were greater for both the Britax Advocate and Graco Nautilus Safety Surround, which are wider than their corresponding models, the Britax Boulevard and Graco Nautilus 65, respectively. This testing demonstrated that child restraints cannot simply be widened to meet the FMVSS No. 213a side impact test; simply widening the restraint may, in fact, degrade performance. Manufacturers will likely use different engineering solutions (*e.g.,* designing in energy-absorbing components) to improve performance rather than just widen the restraint. A well-engineered restraint could meet the requirements of this final rule without becoming wider.

Concerns about rear-facing CRSs ''bulking-up'' to meet the side impact protection requirements also appear unwarranted. As will be discussed in a section below, test data from NHTSA's tests developing this final rule indicate that not all side wings and padding protect the same, and in some cases, ''more'' of a countermeasure (padding, structure) was not necessarily ''better.'' Width, wings, padding, padding-like features, and other countermeasures employed to provide protection in side impacts must be engineered to attain the performance specified by FMVSS No. 213a. Adding bulk and weight to a child restraint is not necessary and can be counterproductive.

TABLE 10—UPPER WIDTH AND HIC15 VALUES IN TESTS WITH THE Q3S DUMMY IN BRITAX BOULEVARD AND BRITAX ADVOCATE CRS MODELS IN FORWARD-FACING CONFIGURATION

Database test No.	CRS	HIC15	Advertised side protection	Upper width
CRS Pair 1:				
10105	Britax Boulevard	522	2 Layers of Side Impact Protection (energy-absorbing shell and foam-lined head rest).	460
10106	Britax Advocate	665	3 Layers of Side Impact Protection (energy absorbing shell, foam-lined headrest and external cushions).	465
CRS Pair 2:				
10108	Graco Nautilus 65	609	EPS Energy Absorbing Foam and Reinforced Steel	455
10109	Graco Nautilus Safety Surround.	838	EPS Energy Absorbing Foam, Reinforced Steel and Safety Surround Technology (safety surround means that the head rest has a thicker foam).	470

NHTSA also believes there is a technical incentive in FMVSS No. 213a that encourages designs toward narrower CRSs. Under this final rule, the impact velocity between the door and the CRS will be lower for narrow CRSs compared to wider CRSs. Narrower CRSs are at a greater distance from the edge of the sliding seat and so the door will impact the CRS at a later time after first impacting the sliding seat. This later impact will result in a lower relative velocity of the sliding seat with respect to the door at the time of impact with the CRS.

NHTSA studied this aspect of the test procedure in following up on the commenters' concern about the widths of CRSs. NHTSA analyzed the relative velocity at impact time between the door and the CRS for a wide CRS (Safety 1st Advanced Air+, 520 mm maximum width) and narrow CRS (Chicco Next Fit, 460 mm maximum width). As shown in Figure 1 below, the wider CRS is impacted by the door at a relative velocity of 29.19 km/h while the narrow one is impacted at 26.59 km/h. Both HIC15 and chest deflection were lower in the test of the narrow CRS (Chicco

[81] Louden, A., & Wietholter, K. (2022, March). *FMVSS No. 213 side impact test evaluation and revision* (Report No. DOT HS 812 791). Washington, DC: National Highway Traffic Safety Administration (hereinafter Louden & Wietholter (2022)). Available in the docket of this final rule.

Next Fit) than the wide CRS (Safety 1st Advance SE Air+). These CRSs are designed differently, so their countermeasures could have affected the HIC15 and chest deflection values measured by the dummy in the tests. Yet these results suggest that the FMVSS No. 213 side impact test will not in and of itself lead to wider CRSs.

In sum, based on NHTSA's testing of various types of CRSs in the side impact test protocol, NHTSA believes that CRSs do not have to be wider or bulkier to meet the side impact performance requirements. In fact, our evaluations showed that some narrower CRSs performed better than wider CRSs.

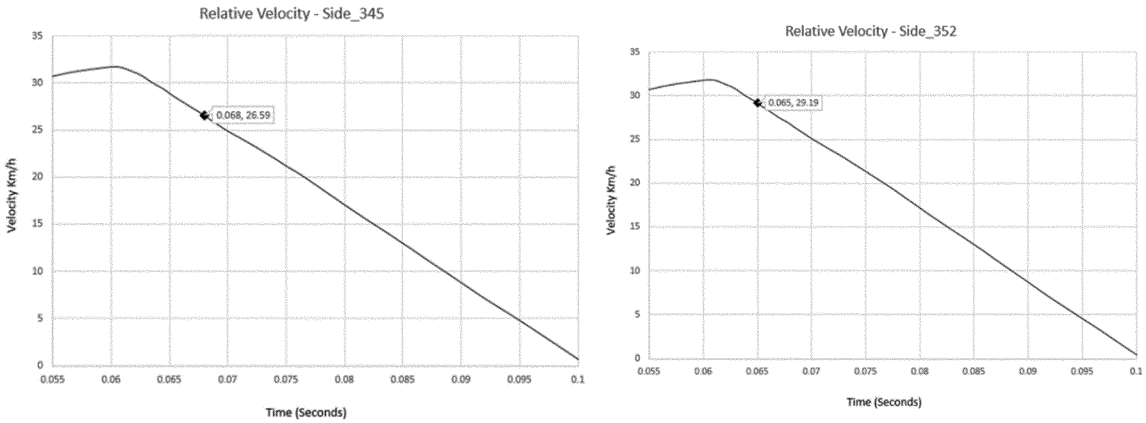

Figure 1. Relative Velocity at the time the door impacts the CRS – Chicco Next Fit (left) Safety First Advanced Air+ (right).

c. More Bulk Is Not Necessarily Advantageous; the 2017 Test Program

In 2017, NHTSA tested child restraint systems on the side impact seat assembly (SISA) as configured to the specifications of this final rule. There were two parts to this program. The first part of the testing was conducted to compare results of tests on the final SISA configuration with test results from 2012 using the proposed SISA. Three forward-facing CRS models (Evenflo Triumph,[82] Evenflo Titan and Evenflo Tribute) and three rear-facing CRS models (Evenflo Tribute, Safety 1st Alpha Omega and Graco My Ride 65) were tested using the Q3s dummy on the final SISA to compare to the results from corresponding sled tests conducted on the proposed SISA. Paired comparison analyses (see Table 11) show that HIC15 and chest deflection results on the proposed and final SISA were not significantly different ($p \leq 0.05$). These data indicate that changes to the SISA between the NPRM and final rule did not affect test results from tests of the CRSs.

TABLE 11—PAIRED COMPARISON T-TEST RESULTS OF TESTS CONDUCTED USING THE FINAL SISA CONFIGURATION AND THE PROPOSED SISA

Dummy, configuration and restraint type	Final rule SISA configuration				NPRM SISA configuration			
	Test No.	CRS	HIC15	Chest deflection [mm]	Test No.	CRS	HIC15	Chest deflection [mm]
Q3s in Forward Facing (FF) Convertible Installed with CRAS.	10274	Evenflo Triumph (2009)	498.8	11.4	7561	Evenflo Triumph Advantage DLX.	463.8	14.6
					8252	Evenflo Triumph Advantage DLX.	445.8	16.1
					8254	Evenflo Triumph Advantage DLX.	468.7	13.5
	10276	Evenflo Titan	1029.3	28.3	7557	Evenflo Titan	846.5	20.6
	10101	Evenflo Tribute	760.0	20.9	7547	Evenflo Tribute	788.0	20.2
		T.Test	*0.192*	*0.897*				
Q3s in Rear Facing (RF) Convertible Installed with lower anchors only (LA only).	10282	Evenflo Tribute	611.5	23.4	7554	Evenflo Tribute	763.0	22.4
	10283	Safety 1st Alpha Omega	396.4	26.0	7553	Safety 1st Alpha Omega	407.0	25.6
	10284	Graco My Ride 65	778.3	22.3	8260	Graco My Ride 65	751.0	25.0
					8264	Graco My Ride 65	681.0	31.0
		T.Test	*0.869*	*0.341*				

The second part of the testing was to assess the performance of more recently produced child restraint systems to the requirements of then-pending FMVSS No. 213a. NHTSA conducted 18 tests of 17 CRS models on the final SISA configuration. The 17 models represented 9 different types of child restraints, including infant, convertible

[82] The Evenflo Triumph was produced in 2009 which ensured this model had not been modified to improve side impact in response to the 2014 NPRM. The agency also tested a more recently produced model which had very similar performance.

and combination CRSs. NHTSA selected CRSs that had a variety of self-described (advertised) side impact protection features.

The data from the 2017 test program indicated that child restraint system designs had changed since the publication of the NPRM in 2014. Of the 17 models tested, one (1) model had no side impact protection advertised, seven (7) models advertised that the product was side impact-tested or had side impact protection, and nine (9) models self-described the side impact technology used. Among the selected CRSs were 2 pairs of CRS models where one of the CRS had ''incremental'' improved side impact protection, based on their product description, compared to the other CRS. The Graco Nautilus and the Graco Nautilus Safety Surround (discussed above this preamble) were very similar models but the latter had a thicker head rest structure that was advertised as providing extra protection. The Britax Boulevard and Britax Advocate (also discussed above) were also CRSs that appeared to be similar, but the Britax Boulevard only had two levels of side impact protection while the Advocate had three levels of protection (according to the advertising).

NHTSA tested the child restraints with the Q3s 3-year-old child dummy and the CRABI–12-month-old dummy. Forward-facing CRSs were installed using the lower anchors of the child restraint anchorage system required by FMVSS No. 225 and the tether anchorage, and rear-facing CRSs were installed using the lower anchorages only. Tables 12 and 13 provide a test matrix of the CRS name, orientation, installation method, dummy used and recorded injury measures.

TABLE 12—TEST MATRIX AND SUMMARY RESULTS OF TESTS WITH THE Q3S ATD USING THE FINAL SISA CONFIGURATION

Database No.	CRS	Orientation	Installation	HIC15 [g]	Chest deflection [mm]
				IARV=570	IARV=23
10100	Chicco NextFit	FF Convertible	CRAS	582.0	18.7
10101	Evenflo Tribute	FF Convertible	CRAS	760.3	20.8
10102	Cosco Scenera Next	FF Convertible	CRAS	979.8	26.8
10103	Maxi-Cosi Pria 70	FF Convertible	CRAS	512.9	17.6
10104	Evenflo Chase	FF Combination	CRAS	937.5	24.3
10105	Britax Boulevard	FF Convertible	CRAS	521.7	*7.08
10106	Britax Advocate	FF Combination	CRAS	665.3	18.3
10107	Safety 1st Advance SE Air+	FF Convertible	CRAS	616.3	27.7
10108	Graco Nautilus 65	FF Combination	CRAS	609.0	13.6
10109	Graco Nautilus Safety Surround	FF Combination	CRAS	838.5	17.9
10115	Cosco Scenera Next	RF Convertible	LA Only	677.7	26.2
10116	Graco Size4Me 65	RF Convertible	LA Only	778.5	23.5
10118	Evenflo Triumph	RF Convertible	LA Only	487.8	12.2
10117	Baby Trend PROtect	RF Convertible	LA Only	963.7	25.8

Note: *CRAS* means the full child restraint anchorage system, *LA Only* means lower anchorages of the child restraint anchorage system, *RF* means rear-facing, and *FF* means forward-facing.
* *Possible data anomaly.*

Results shown in Table 12 show that among forward-facing CRSs tested with the Q3s dummy, 20 percent (2/10) had HIC15 values less than or equal to the IARV of 570, and 70 percent (7/10) had chest deflection less than or equal to the IARV of 23 mm. Among rear-facing CRSs tested with the Q3s dummy, 25 percent (¼) had HIC15 values less than or equal to the IARV of 570 and 25 percent (¼) had chest deflection values less than or equal to the IARV of 23 mm.

TABLE 13—TEST MATRIX AND SUMMARY RESULTS OF TESTS WITH THE CRABI 12-MONTH-OLD ATD USING THE FINAL SISA CONFIGURATION

TRC test No.	CRS	Orientation	Installation	Contact
10110	Britax B-Safe 35	RF Infant	LA Only	No.
10112	Cybex Aton 2 using telescopic side arm	RF Infant	LA Only	No.
10111	Evenflo Embrace LX	RF Infant	LA Only	No.
10114	Maxi-Cosi Mico AP	RF Infant	LA Only	No.

Note: *LA Only* means lower anchorages of the child restraint anchorage system and *RF* means rear-facing.

As shown in Table 13, rear-facing CRS (infant carriers) tested with the 12-month-old CRABI dummy showed that 100 percent (4/4) met the containment criteria.

General Observations

The 2017 test results [83] with the Q3s dummy show fewer child restraints able to conform to the performance requirements of FMVSS No. 213a, compared to test results from earlier tests. In the 2014 tests reported in the NPRM, among 12 CRS models in the forward-facing mode tested with the Q3s dummy, 41 percent (5/12) had HIC15 values passing the IARV and 75 percent (9/12) had chest deflection passing the IARV. Additionally, 40 percent (2/5) of rear-facing CRSs tested with the Q3s dummy had HIC15 and

[83] Louden & Wietholter (2022). Available in the docket of this final rule.

chest deflection values passing their respective IARVs. Among rear-facing CRSs (infant carriers) tested with the 12-month-old CRABI dummy, 91 percent met the containment criteria in the tests.

It should be noted that for the fleet tests presented in the NPRM, NHTSA selected the CRS models to obtain a representation of the market at the time, with a variety of CRS manufacturers and models. For the 2017 testing done with the final SISA configuration, NHTSA selected CRSs that had a variety of side impact protection features, but the CRSs were not necessarily a representation of the market. The goal of the second part of the tests using the final SISA configuration presented in Tables 12 and 13 was to learn how the CRSs with advertised improved side impact protection performed in the side impact test.

To select the CRSs that would be tested for the final rule evaluations, NHTSA examined CRS designs tested in 2011–2012 with designs updated in 2016–2017. The comparisons of designs were only done visually, *i.e.,* NHTSA did not undertake tear-down analyses of the underlying structure designs.

In the test, the agency observed that some of the designs that were not updated, or that were minimally updated, such as the Graco Classic Ride 50,[84] Evenflo Tribute, and Evenflo Chase, maintained the same performance as in 2012 (see Table 5). In contrast, the performance measures (HIC15, chest deflection, head contact) in other models that had been redesigned since the NPRM were markedly different than in their respective older versions. For example, the redesigned Britax Advocate had higher HIC15 measures, and the Safety 1st Advance SE Air+ and Cosco Scenera had higher chest deflections (see Table 14) than their respective prior versions. The redesigned Britax Advocate has a different shell, a side structure with different shape and more coverage (but has a similar adjustable head restraint as the older version). The redesigned and prior versions of the Safety 1st and Cosco models had differences in the side structures of the CRS at the head and chest areas, and the newer versions appeared to be thicker in the head and torso/pelvis area. The Graco Nautilus 65 2017 showed improved chest deflections compared to the Graco Nautilus 2012, while the Graco Nautilus Safety Surround 2017 had increased HIC15 compared to the Graco Nautilus 2012.

TABLE 14—COMPARISON OF THE PERFORMANCE OF FORWARD-FACING AND REAR-FACING CRS MODELS IN TESTS WITH THE PROPOSED AND FINAL SISA CONFIGURATIONS

Database No.	SISA configuration	CRS model	HIC15	Chest deflection [mm]	Orientation
7544	NPRM	Evenflo Chase	766	18.7	Forward Facing.
8253	NPRM		987	20.1	
8255	NPRM		853	25.0	
8257	NPRM		784	25.4	
10104	Final		937	24.3	
7547	NPRM	Evenflo Tribute	788	20.2	Forward Facing.
10101	Final		760	20.9	
8276	NPRM	Graco Classic Ride 50/Graco Comfort Sport	742	19.3	Forward Facing.
8278	NPRM		679	21.5	
8280	NPRM		675	19.6	
10020	Final		672	21.6	
10021	Final		716	20.6	
10022	Final		691	20.1	
7545	NPRM	Britax Advocate	365	19.5	Forward Facing.
10106	Final		665	18.3	
7546	NPRM	Safety 1st Air Protect/Advance SE Air+	624	16.5	Forward Facing.
10107	Final		616	27.7	
8283	NPRM	Cosco Scenera/Scenera Next	685	19.2	Rear Facing.
8285	NPRM		714	20.2	
8287	NPRM		660	23.4	
10115	Final		678	26.2	
8277	NPRM	Graco Nautilus/Nautilus 65/Nautilus Safety Surround.	654	17.7	Forward Facing.
8279	NPRM		597	19.5	
8281	NPRM		625	17.0	
10108	Final		609	*13.6*	
10109	Final		839	17.9	
7562	NPRM	Maxi Cosi Priori/Maxi Cosi Pria 70	388	21.1	Forward Facing.
10103	Final		512	*17.6*	

Note: Bold = Increased Value, Italic = Decreased Value.

Based on this testing (Table 12 and Table 14) NHTSA believes that some of the more recently tested CRS designs may have added unnecessary bulk. Injury values are higher in some designs that had added mass (thickness)[85] than those without it. The 2017 testing indicates that placement of coverage, materials, internal structures, shape of the coverage and other factors must be purposefully engineered, as more is not necessarily better.

NHTSA had thought in the 2014 NPRM that CRSs with greater side coverage performed better than CRSs with a less side coverage. Designs meeting FMVSS No. 213a's performance requirements are feasible, but the data

[84] Also known as the Comfort Sport.

[85] Table 10 of this final rule measured the width of the CRSs with and without additional padding and documented the description of the different side impact protection designs. Some CRSs were simply visually inspected where they may have appeared to have thicker structures.

from the 2017 program show there are optimal ways to add structure and padding, and ways that added bulk could have an adverse effect. The test procedure adopted by this final rule will provide a means for CRS developers to assess, in a meaningful way, the performance of their designs and optimize the protection of children in side impacts.

d. The 40-lb Limit for Coverage of the Standard

Consistent with the Safety Act and NHTSA's guiding principles for this rulemaking, NHTSA proposed to apply the side impact test requirements to CRSs designed to seat children in a weight range from birth to 18.1 kg (0 to 40 lb). The Safety Act requires each FMVSS to be appropriate for the particular type of motor vehicle equipment for which it is prescribed.[86] NHTSA determined the side protection standard would be appropriate for child restraints for children in the 0 to 18.1 kg (40 lb) group [87] because these children have a high rate of child restraint use (less than 1-year-old = 97.5 percent and 1- to 3-years-old [88] = 94.3 percent according to the 2019 National Survey of the Use of Booster Seats (NSUBS) [89]). Their high use rate provides a good opportunity for reducing injuries and fatalities through a side impact regulation.[90]

NHTSA also determined that focusing on the 0 to 18.1 kg (40 lb) (0- to 4-years-old) age group is appropriate because countermeasures are practicable for this age group. Real-world data show that head injuries are the most common injuries in a side impact for 0- to 4-year-old children. According to McCray,[91] head injuries in children 1- to 3-years-old are slightly higher than overall for children 0 to 12 year of age. Using padding and/or larger side wings to keep the child's head contained and protected enables forward- and rear-facing CRSs to meet the requirements of this final rule without adding any additional structures to the safety seats. The Q3s dummy is also representative of children in the upper range of this age group and can be used to assess the performance of child safety seat countermeasures in protecting against unreasonable head impact.

NHTSA also explained in the NPRM that the FMVSS No. 213a side impact test replicates a near-side crash as experienced by a child under 18.1 kg (40 lb) in a safety seat. The agency's test results indicate that an important factor in the near-side impact environment is the position of the child's head with respect to the ''beltline'' (also referred to as the windowsill) [92] of the vehicle door. When the child's head is below the beltline—as likely with children weighing up to 18.1 kg (40 lb) (0- to 4-year-old) in child restraints—protection of the child is critically dependent on the child safety seat, as negligible benefit is expected to be attained from the vehicle's side curtain air bags. Older children restrained in CRSs typically sit high enough so that the child's head is above the beltline and within the area covered by the side curtain air bag.

Finally, NHTSA emphasized that, due to the absence of an array of side impact child test dummies, focusing this rulemaking on CRSs designed for children in a weight range that includes weights up to 18.1 kg (40 lb) properly accords with 49 U.S.C. 30111(b)'s provision that each FMVSS be appropriate for the types of motor vehicle equipment for which it is prescribed. NHTSA determined that the Q3s dummy (weighing 14.5 kg (32 lb)) is representative of young children weighing under 18.1 kg (40 lb) and is appropriate as a test device for CRSs recommended for children weighing up to 18.1 kg (40 lb). The dummy would not be a suitable dummy to test the performance of CRSs in protecting children weighing more than 18.1 kg (40 lb), as it is not representative of children for whom the CRS is sold.

Comments Received

NHTSA received diverse comments on the 40-lb applicability threshold. Commenters generally agreed that the absence of a dummy larger than the Q3s limited the agency's applying the side impact standard to child restraints for children weighing more than 18.1 kg (40 lb), but several commenters urged NHTSA to develop new test dummies or use existing ones, such as frontal test dummies. No commenter objected to NHTSA's requiring manufacturers of booster seats to limit use of boosters to children weighing at least 18.1 kg (40 lb); six commenters expressly supported the provision (IIHS, Dorel, Britax, JPMA, UMTRI and Safekids). Advocates requested NHTSA provide more support for its determination that children weighing more than 18.1 kg (40 lb) may benefit from side curtain air bags.

IIHS concurred with NHTSA's proposed threshold applying FMVSS No. 213a to CRSs for children weighing less than 18.1 kg (40 lb) for the reasons given in the NPRM. IIHS provided data to support the view that children weighing more than 18.1 kg (40 lb) in booster seats are seated high enough to take advantage of the vehicle's side curtain air bags. The commenter explained that data it obtained during its tests of booster seat belt fit indicate that the center of gravity (CG) of a typical 6-year-old child's head is 600–650 millimeters (mm) above the vehicle seat when seated in a booster, which is above the windowsill (beltline) of 500 mm discussed in the NPRM.[93] IIHS found that on average, the seated height of the 6-year-old dummy in a booster seat is within a few centimeters of the seated height of the 5th percentile adult female dummy used in the rear seat of IIHS's dynamic side impact test. IIHS stated that in the most recent five years of side impact evaluations, more than 80 percent of more than 200 vehicle makes and models received the top ratings for injury mitigation for the rear seat occupant, and that the proportion jumps to 95 percent for the most recent two years of evaluations. IIHS explained that in these tests, injury risk to rear-seat occupants is reduced by a combination of vehicle countermeasures such as curtain air bags, door structural improvements, and voluntary padding of the beltline. IIHS stated it expects ''vehicle countermeasures that have improved outcomes for the 5th percentile female dummy in our testing

[86] 49 U.S.C. 30111(b).

[87] This group encompasses children ages birth to about 4 years.

[88] Note that, in survey data, a child who is 1 day shy of his or her 4th birthday is still considered a 3-year-old. Therefore, survey data representing 1-to-3-year-old children include 3-year-old children who are nearly 4-years-old. Also, the 40 lb weight limit represents the weight of a 75th percentile 4-year-old child and an average 5-year-old child.

[89] Enriquez, J. (2021, May). The 2019 National Survey of the Use of Booster Seats (Report No. DOT HS 813 033). National Highway Traffic Safety Administration. NSUBS is a probability-based nationwide child restraint use survey conducted by NHTSA's National Center for Statistics and Analysis (NCSA).

[90] Children between 4- and 12-years-old have lower child restraint use (4- to 7-year-olds = 55 percent and 8- to 12-year-olds = 6 percent). Data show that 43 percent of 4- to 7-year-old and 78 percent of 8- to 12-year-old children use seat belts.

[91] McCray, L., Scarboro, M., Brewer, J. ''Injuries to children one to three years old in side impact crashes,'' 20th International Conference on the Enhanced Safety of Vehicles, 2007. Paper Number 07–0186.

[92] The beltline of a vehicle is a term used in vehicle design and styling, referring to the nominally horizontal line below the side glazing of a vehicle, which separates the glazing area from the lower body. Passenger vehicles are required to provide head protection in side impacts and ejection mitigation in rollovers, pursuant to FMVSS No. 214 and FMVSS No. 226, ''Ejection mitigation,'' respectively. The countermeasure provided to meet FMVSS No. 226 in passenger vehicles, a side curtain air bag, must meet performance requirements that, in effect, will necessitate coverage of the side windows to the beltline of the vehicle.

[93] NHTSA proposed a 500 mm (19.6 in) beltline height for the SISA. *See,* 79 FR at 4587–4588.

would also reduce the likelihood of injury to a 6-year-old seated in a booster seat.''

Agency Response

After considering the comments and other available information, NHTSA has adopted the proposed application of FMVSS No. 213a for the reasons explained in the NPRM and further discussed below. Standard No. 213a will apply to add-on child restraint systems that are recommended for use by children in a weight range that includes weights up to 18.1 kg (40 lb).[94]

Several commenters suggested NHTSA adopt other test dummies to expand the applicability of FMVSS No. 213a to CRSs for children weighing more than 18.1 kg (40 lb). Safe Kids, Consumers Union (CU) and Advocates urged NHTSA to develop a 6-year-old and/or 10-year-old child side impact dummy. Safe Ride News (SRN) encouraged the agency to work swiftly to adopt the Q6 dummy for use specifically in side impact tests. Transport Research Laboratory (TRL) supported using the omnidirectional Q-Series dummies used for side impact testing in United Nations Economic Commission for Europe Regulation 129 (ECE R.129).[95] TRL stated that the dummies were capable of distinguishing differences in the design of child restraints, and that a Q6s (6-year-old child dummy) has been developed, along with a side impact kit for the Q10 (10-year-old child dummy). ARCCA suggested NHTSA use the Hybrid III (HIII) frontal impact 6-year-old dummy, and measure only head containment and structural integrity. In contrast, Graco cautioned that the use of larger test ATDs should be considered when they have been confirmed to withstand side impact crash forces and have proven biofidelity in the direction of a side collision.

NHTSA has decided against expanding the applicability of FMVSS No. 213a to child restraints recommended for children weighing more than 18.1 kg (40 lb). TRL suggested NHTSA consider the Q-series dummies because they are currently used to test CRSs in United Nations Economic Commission for Europe Regulation 129 (ECE R.129).[96] NHTSA disagrees with TRL. In 1999, First Technology Safety Systems (FTSS)[97] deemed the Q3 dummy's performance suboptimal in frontal testing, and even more so in lateral. FTSS developed the Q3s dummy in response to the Q3's suboptimal lateral performance. NHTSA has not evaluated the lateral performance of the Q series 1-, 6- and 10-year-old dummies or Q series side impact kits, but understands them to have the same shortcomings as the original Q3. Given the unsatisfactory fundamental design of the Q dummies, NHTSA decided not to use limited agency resources furthering development of the Q-series 6- and 10-year-old dummies.[98]

ARCCA suggested that NHTSA use the HIII frontal 6-year-old dummy to evaluate CRS structural integrity and head containment. The commenter argued that NHTSA could use the HIII 6-year-old dummy since it will use the 12-month-old frontal CRABI dummy in FMVSS No. 213a's side impact test.

NHTSA disagrees. As the agency explained in the NPRM, NHTSA decided to use the frontal CRABI dummy because it would be fully restrained by the child restraint on the SISA and no injury assessment reference values would be taken. That is, the test with the fully restrained frontal 12-month-old CRABI represents a best-case scenario for passing. If a child restraint allowed the CRABI's head to contact the door under these best-case circumstances, that would be a clear demonstration, simply through observation of crash dynamics, that a child's head would contact the door when involved in a real-world crash. Thus, while the 12-month-old CRABI dummy is not a side impact dummy, it could be applied in a useful manner to evaluate aspects of CRS performance in side impact. A failure to contain the 12-month-old CRABI's head would lead to improved side impact designs (*e.g.,* deeper side structure/wings or shape changes in CRS adjustable head restraints).

The same cannot be said about the frontal 6-year-old test dummy. Children younger than 1-year of age have the highest use of CRSs with internal harnesses (nearly 100 percent per National Child Restraint Use Special Study (NCRUSS)[99]), so fully restraining the 1-year-old CRABI in the test replicates how children will be restrained in the real world. In contrast, only 8 percent of children 6 years of age are restrained in CRSs with internal harnesses. If the HIII 6-year-old child dummy were restrained as 6-year-old children are usually restrained in the real world, it would be restrained in a booster with only a lap and shoulder belt. Many current booster seats could fail a head containment criterion when tested with a frontal 6-year-old dummy, even if the head of the 6-year-old dummy were above the beltline and therefore likely to interact with a side curtain air bag in an actual vehicle. To accurately simulate the side impact crash environment in such testing, a representation of the side air bag appears appropriate. This rulemaking has not considered the implications of including a side curtain air bag on the SISA and doing so is beyond the scope of this final rule.

ARCCA believed that applying FMVSS No. 213a to child restraints for children weighing up to 29.5 kg (65 lb) would better protect children seated in far-side and center seating positions by preventing impact with other occupants and CRSs adjacent to the child, and helping assure they remain properly positioned in their restraint system. SRN believed it is likely that shorter children do not gain the full protection of side curtain air bags in the 18.1 to 29.5 kg (40 to 65 lb) weight range. Neither commenter provided data to support their views.

Advocates and others argued that MAP–21 does not limit improvements only to the use of CRS by children who weigh less than 18.1 kg (40 lb). NHTSA has determined that, while the language of section 31501(a) of MAP–21 is broad enough to encompass a large universe of child restraint systems, there are practical and technical reasons for applying the dynamic side impact test only to CRSs designed to seat children in a weight range that includes weights up to 18 kg (40 lb). First, the seated height of children weighing more than 18 kg (40 lb) who are restrained in child restraints is typically sufficient to take advantage of the vehicle's side impact protection systems, such as side curtain air bags. Thus, the safety need for Standard No. 213's dynamic side impact requirements is attenuated for these CRSs. NHTSA has also determined that the test procedure of FMVSS No. 213a may not be appropriate for testing child restraints recommended for children

[94] Harnesses and car beds are excepted from the standard.

[95] ECE R.129, ''Uniform provisions concerning the approval of enhanced child restraint systems used on board vehicles (ECRS),'' *http://www.unece.org/fileadmin/DAM/trans/main/wp29/wp29regs/2013/R129e.pdf.*

[96] ECE R.129, ''Uniform provisions concerning the approval of enhanced child restraint systems used on board vehicles (ECRS),'' *http://www.unece.org/fileadmin/DAM/trans/main/wp29/wp29regs/2013/R129e.pdf.*

[97] In 2010, FTSS merged to become Humanetics Innovative Solutions.

[98] NHTSA is developing the ''Large Omnidirectional Child (LODC)'' 10-year-old child dummy, which is designed to have biofidelic performance in lateral and frontal impact. Most of the development work has been focused on frontal and oblique impacts. NHTSA plans to evaluate and enhance the dummy for side impact testing as well.

[99] NCRUSS *https://crashstats.nhtsa.dot.gov/Api/Public/ViewPublication/812142.*

weighing more than 18.1 kg (40 lb). A 6-year-old in a child restraint will interact with vehicle side structures differently than a 3-year-old, particularly around the vehicle beltline and with respect to a side curtain air bag. The side impact seating assembly used in FMVSS No. 213a does not include a side curtain air bag. The agency is unable to conclude the side impact test reasonably replicates a near-side crash as would be experienced by a child weighing over 18.1 kg (40 lb) in the real world, since the side curtain air bag, a key vehicle countermeasure affecting injury outcome to occupants whose heads are above the beltline, is not represented in the test.

Second, there is no side impact dummy representative of children larger than those represented by the Q3s that can reasonably be used to test CRSs for children above 18 kg (40 lb) to the dynamic side impact requirements in this final rule. As explained throughout this rulemaking,[100] without an appropriate test dummy, the data from a dynamic test would not provide a meaningful assessment of the performance of the CRS in protecting children of weights above 18.1 kg (40 lb). For FMVSS No. 213's front-impact tests, NHTSA increased the applicability of the standard to increasingly higher weight limits gradually, and only when appropriate test dummies became available for use in compliance testing, to ensure test data were meaningful and to avoid giving a false sense of security about CRS performance. NHTSA is developing the Large Omni-Directional Child ATD representative of a seated 9- to 11-year-old child.[101] When the development and standardization process of this child dummy is complete, NHTSA will consider a side impact test environment appropriate for evaluating CRSs intended for use by older and larger sized children than those subject to this final rule.

MAP–21 requires a final rule amending FMVSS No. 213, which means that the rulemaking must be conducted in accordance with the Safety Act. Under the Safety Act, NHTSA is authorized to prescribe Federal motor vehicle safety standards that are practicable, meet the need for motor vehicle safety, and are stated in objective terms.[102] ''Motor vehicle safety'' is defined in the Safety Act as ''the performance of a motor vehicle or motor vehicle equipment in a way that protects the public against unreasonable risk of accidents occurring because of the design, construction, or performance of a motor vehicle, and against unreasonable risk of death or injury in an accident, and includes nonoperational safety of a motor vehicle.'' [103] When prescribing such standards, NHTSA must consider all relevant, available motor vehicle safety information, and consider whether a standard is reasonable, practicable, and appropriate for the particular type of motor vehicle or motor vehicle equipment for which it is prescribed.[104] NHTSA must also consider the extent to which the standard will further the statutory purpose of reducing traffic accidents and associated deaths.[105]

NHTSA has developed a standard that will improve the protection of children seated in child restraint systems during side impacts, in accordance with MAP–21, while meeting the criteria of Section 30111 of the Safety Act. For the reasons explained above, the agency believes that FMVSS No. 213a meets the need for safety, is stated in objective terms, and is reasonable, practicable, and appropriate.

e. Improving Side Impact Protection for Children Older Than 3-Years-Old

To be clear, this final rule applying to child restraints for children weighing up to 18.1 kg (40 lb) will significantly improve side impact protection of most children up to age 6. According to the CDC growth charts, about 100 percent of 3-year-old children, 75 percent of 4-year-old children, 50 percent of 5-year-old children, and 25 percent of 6-year-old children weigh 18.1 kg (40 lb) or less.[106] Child restraints subject to this final rule can be used by all children 0- to 3-years of age, most 4-year-olds, half of 5-year-olds, and 25 percent of 6-year-old children. This final rule improves the side impact protection of all these children.

This final rule not only improves the side impact protection offered by the safety seats but also increases the likelihood caregivers will keep the children in the safety seats longer before prematurely transitioning to a booster seat, which is an outcome that improves child safety.[107] Booster seats typically do not have substantial side structure ''wings'' or an internal belt system to restrain the child occupant, so it would be a technical challenge for booster seats to meet the side impact requirements of this final rule. However, because FMVSS No. 213a is written to apply specifically to child restraints for children weighing less than 18.1 kg (40 lb), manufacturers of booster seats will likely respond to this final rule by marketing the seats as only suitable for children weighing more than 18.1 kg (40 lb) (so as to exclude the seats from meeting FMVSS No. 213a). NHTSA believes such a change that limits use of booster seats by small children would benefit safety, as field data show that children weighing less than 18.1 kg (40 lb) are safer in child safety seats than in boosters.[108] Thus, the 18.1 kg (40 lb) threshold will benefit child passenger safety, as it will help keep children too small for booster seats in child safety seats until they are ready for a booster seat.

Further, this final rule will also benefit the side protection of children weighing more than 18.1 kg (40 lb) in several ways. A review of CRS models in the market suggests that most child restraints sold for children weighing less than 18.1 kg (40 lb) are designed to also be used by children weighing more than 18.1 kg (40 lb) as forward-facing CRSs with harnesses and as booster seats.[109] As the seated height difference between a 3-year-old and a 6-year-old is only 3.5 inches, the countermeasures used by the combination seat to protect children weighing less than 18.1 kg (40 lb) could also benefit the older child in the booster seat mode.[110] The restraints

[100] *See NPRM.* 79 FR at 4572–4573.

[101] Suntay, B., Carlson, M., Stammen, J., ''Evaluation of the Large Omni-Directional Child Anthropomorphic Test Device,'' DOT HS 812 755, July 2019. *Evaluation of the Large Omni-Directional Child Anthropomorphic Test Device (bts.gov).*

[102] 49 U.S.C. 30111(a).

[103] 49 U.S.C. 30102(a)(8).

[104] 49 U.S.C. 30111(b).

[105] *Id.*

[106] Center for Disease Control (CDC) 2000 Growth Charts. *https://www.cdc.gov/growthcharts/cdc_charts.htm.* Last Accessed August 8, 2018.

[107] NHTSA recommends that children riding forward-facing should be restrained in CRSs with internal harnesses (child safety seats) as long as possible before transitioning to a booster seat. *https://www.nhtsa.gov/equipment/car-seats-and-booster-seats#age-size-rec.*

[108] NHTSA's November 2, 2020, NPRM, *supra,* also proposed that booster seats *must not* be labeled for children weighing less than 18.1 kg (40 lb). 85 FR at 69427, col. 3. FMVSS No. 213 currently permits booster seats only to be recommended for children weighing at least 13.6 kg (30 lb) (S5.5.2(f)). Based on an analysis of field data and other considerations, NHTSA proposed raising the 13.6 kg (30 lb) value. We are concerned that 30 pounds corresponds to the weight of a 50th percentile 3-year-old, and to the weight of a 95th percentile 18-month-old; *i.e.,* children too small to be safely protected in a booster seat. In the November 2, 2020 NPRM, we proposed to amend S5.5.2(f) to raise the 13.6 kg (30 lb) limit to 18.2 kg (40 lb), which is greater than the weight of a 97th percentile 3-year-old (17.7 kg (39.3 lb)) and approximately the weight of an 85th percentile 4-year-old.

[109] These child restraints are commonly called ''combination seats.'' They are sold for use with younger children (with a harness) and older children (as a booster seat)

[110] This observation accords with NTSB's comment that ''the proposed tests encompass the majority of CRSs because the upper use limit for most small restraint systems extends to at least 40 pounds and the lower use limit is at or below 40

will have the same frame and can use the adjustable head protection and side padding countermeasures provided to meet this final rule to protect children weighing more than 18.1 kg (40 lb).

This final rule will also improve the side impact protection of booster seats by better assuring that only children large enough (over 18.1 kg (40 lb)) to be protected by the side curtain air bag will use the seats. NHTSA stated in the preamble to the NPRM that the height of children weighing more than 18.1 kg (40 lb) seated in a CRS would be sufficient to take advantage of the vehicle's side impact protection systems, such as side curtain air bags.[111] IIHS provided data confirming that side curtain air bags can protect children weighing over 18.1 kg (40 lb) seated in booster seats. The data show that the CG of the head of a 6-year-old child seated in a booster seat is above the beltline at 600–650 mm above the vehicle seat, and is within a few centimeters of the position of the head of the 5th percentile adult female test dummy. In IIHS's tests, the vehicles received the top ratings for injury mitigation for the rear seat occupant represented by the 5th percentile adult female test dummy, demonstrating the side curtain air bags, door structural improvements, and padding of the beltline were effective in protecting the 5th percentile adult female in side impacts. IIHS's data indicate a 6-year-old in a booster is situated in the rear seat similarly to a 5th percentile female, and that both occupants will be positioned relative to the beltline and the side curtain air bags in a manner that would enable them to benefit from the vehicle countermeasures.

NHTSA has also reviewed more recent data IIHS presented at the 2018 Society of Automotive Engineers (SAE) Government Industry Meeting.[112] The study showed that the HIII–6-year-old head CG in a high back booster and a backless booster are above the beltline and are 33 and 64 mm lower, respectively, than that of the SID–IIs 5th percentile female side impact dummy. These data again verify that a 6-year-old child in a booster will be in-position to be protected by the vehicle's side impact protection countermeasures, which include the side curtain air bag and door structural improvements.

Following on these findings, NHTSA measured the HIII 6-year-old dummy in four booster seat models installed on the SISA and compared its positioning with the SID–IIs dummy seated directly on the SISA. The booster seats were the Evenflo Chase and the Graco Nautilus (high back boosters), and the Harmony Youth and the Graco Affix (backless boosters). The measurements show that the HIII 6-year-old dummy's head CG, when seated in the highest booster seat (Graco Nautilus 65) is 1 mm higher than that of the SID–IIs dummy seated on the SISA, and less than 5 cm (47.5 mm) lower than the SID–IIs dummy's head when seated in the shortest booster seat (Graco Affix). All head CGs were above the beltline (see Figure 2).

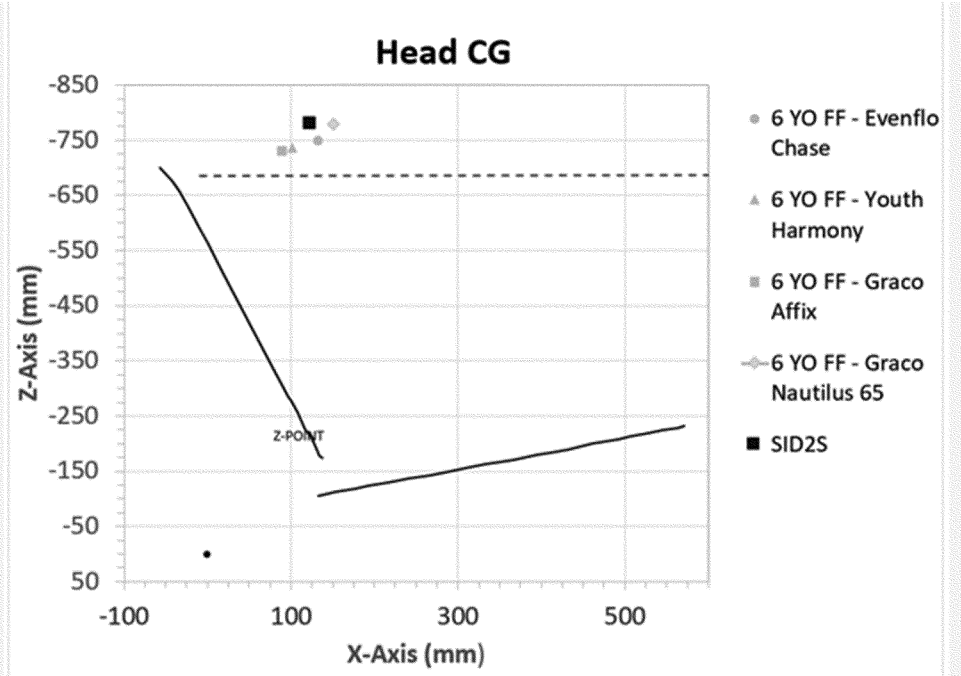

Figure 2. Head CG position of the HIII-6-year-old dummy in booster seats and the SID-IIs 5th percentile female dummy in no booster.

These data confirm the similarity between the head position of the 6-year-old dummy seated in a booster seat and that of the 5th percentile female dummy. FMVSS No. 226 ejection mitigation phase-in requirements were completed in September 2017. Thus, not only will all new vehicles have side curtain air bag technologies that will protect these older children in booster seats, but most of the fleet will incorporate these technologies by the

pounds . . .'' ''We recognize that children at weights less than or greater than 40 pounds benefit from the increased protection provided by a harnessed CRS.''

[111] 79 FR at 4573, col. 2.

[112] The IIHS SAE Government Industry meeting presentation titled ''Booster seat characteristics in the US market'' can be found in the docket.

compliance date of this final rule. The technologies can benefit older and larger children weighing more than 18.1 kg (40 lb) or with a stature of more than 1100 mm (43.3 inches) when the children are properly positioned by a typical booster seat.

The safety of booster seats will be directly improved by assuring that only children large enough to be protected by the side curtain air bag will use the seats. Until this final rule, booster seats could be labeled for children with weights as low as 13.6 kg (30 lb). Restricting booster seat use instructions to children weighing more than 18.1 kg (40 lb) will help ensure they will be used only by children large enough to take advantage of a vehicle's side protection countermeasures. Booster seats have been shown to be highly beneficial in frontal crashes, and are needed to transition children from safety seats to a vehicle belt system. This final rule increases the safety of booster seats by enhancing their utility in side impacts, in furtherance of MAP–21's mandate to improve the protection of children seated in child restraint systems during side impacts.

Since the NPRM's publication in 2014, NHTSA has seen a few booster-seat models that provide a lower than typical boosting height (the height that a booster seat raises a seated child), which may not raise the height of children weighing more than 18.1 kg (40 lb) sufficiently to take advantage of the vehicle countermeasures. Subsequently, NHTSA sponsored a research program [113] as a first step toward determining a minimum boosting height for CRSs recommended for children weighing more than 18.1 kg (40 lb) to ensure that these children can benefit from the vehicle countermeasures and that the CRSs provide enough lift to position the child properly relative to the vehicle's lap and shoulder belts. More on this research is discussed at a later section of this final rule.

f. Weight as a Limiting Factor

Advocates stated ''a discussion of why weight alone is being proposed as a limitation should be provided, considering the repeated discussion of the obesity problem facing the nation's youth and the agency's acknowledgement that seated height, rather than weight alone, is the determining factor.''

Agency Response

The applicability of the standard is not only based on the child weight recommendation for use of the CRS but also on the child height recommendation. The NPRM proposed in S3 to apply the standard to ''add-on child restraint systems, except for harnesses and car beds, that are recommended for use by children in a weight range that includes weights up to 18.1 kg (40 lb), or by children in a height range that includes children whose height is not greater than 1100 mm.'' [114] This final rule adopts the proposed S3. Additionally, the dummy selection for side impact dynamic testing is made taking into consideration weight and height. Any CRS that is recommended for children weighing between 13.6 kg (30 lb) (corresponding to a 95th percentile 18-month-old) and 18.1 kg (40 lb) (corresponding to a 85th percentile 4-year-old) or a height between 870 mm (34.3 inches) (corresponding to a 95th percentile 18-month-old) and 1100 mm (43.3 inches) (corresponding to a 97th percentile 4-year-old) will be tested with the Q3s dummy (see Table 15).

TABLE 15—COMPARISON OF WEIGHT AND HEIGHT BY PERCENTILES FOR YOUNG CHILDREN AND CHILD ATDS [115]

Percentiles	Weight kg (lb)					Height mm (in)				
	3rd	5th	50th	95th	97th	3rd	5th	50th	95th	97th
12 MO Child	8.1 (18.1)	8.3 (18.5)	9.9 (22)	11.9 (26.4)	12.2 (27.2)	697.1 (27.4)	703.2 (27.7)	750.6 (29.6)	800.2 (31.5)	807.5 (31.8)
12 MO CRABI			9.9 (22.05)					740.4 (29.15)		
18 MO Child	9.3 (20.7)	9.5 (21.2)	11.3 (25.2)	13.5 (30.1)	14 (31)	753.6 (29.7)	761.1 (30)	814.4 (32.1)	868.2 (34.2)	875.9 (34.5)
18 MO CRABI			11.1 (24.7)					817.9 (32.2)		
24 MO Child	10.1 (22.5)	10.4 (23)	12.3 (27.4)	14.8 (32.9)	15.3 (33.9)	800.5 (31.5)	809 (31.9)	866.9 (34.1)	924.8 (36.4)	933.8 (36.8)
36 MO Child	11.4 (25.4)	11.9 (26.4)	13.9 (31)	17.2 (38.1)	17.7 (39.3)	875.9 (34.5)	884.9 (34.8)	947.4 (37.3)	1013.8 (39.9)	1023.7 (40.3)
Q3s			14.5 (32)					978 (38.5)		
48 MO Child	12.9 (28.7)	13.2 (29.4)	16 (35.5)	20.2 (44.8)	46.6 (46.6)	936.5 (36.9)	946.4 (37.3)	1015.8 (40)	1087.7 (42.8)	1098.2 (43.2)

The commenter's reference to ''the obesity problem facing the nation's youth'' was not clear, but it could be that Advocates was arguing that the standard should apply to child restraints for children weighing more than 18.1 kg (40 lb). NHTSA disagrees with increasing the 40-lb threshold because the absence of a test dummy to test the side impact protection provided to heavier children makes raising the threshold non-evidence based and could provide a false sense of security about the protection afforded to the larger children. This issue is discussed at length in the section discussing the scope of the new standard.

g. Labeling CRSs for Children Weighing Over 18.1 kg (40 lb)

1. Label as ''Not Tested in Side Impacts''

Comments Received

Advocates commented that booster seats designed for children weighing more than 18.1 kg (40 lb) should be labeled to provide parents with a warning that their child may not be protected in a side crash. Advocates stated that the warning should indicate ''this CRS has not been tested in side impacts for the protection of children weighing more than 18.1 kg (40 lb).'' Similarly, a law student group suggested there should be labeling or consumer information on the packaging of CRSs informing consumers that the CRS has not been tested for side impact crashes for children weighing more than 18.1 kg (40 lb).

Agency Response

NHTSA has carefully considered the request but declines to adopt such a requirement in this final rule. The issue was not discussed in the NPRM, and NHTSA would like the benefit of more public discourse on the ramifications of such a requirement. NHTSA highly values consumers' knowing how child restraints can protect their children's safety. However, information provided

[113] Klinich, Kathleen D., Jones, Monica H., Manary, Miriam A., Ebert, Sheila H., Boyle, Kyle J., Malik, Laura, Orton, Nichole R., Reed, Matthew P., (2020, April). *Investigation of potential design and performance criteria for booster seats through volunteer and dynamic testing* (Report No. DOT HS 812 919). Washington, DC: National Highway Traffic Safety Administration. Link: *https://rosap.ntl.bts.gov/view/dot/49119.*

[114] 79 FR at 4601.

[115] Center for Disease Control (CDC) 2000 Growth Charts. *https://www.cdc.gov/growthcharts/cdc_charts.htm...* Last Accessed August 8, 2018.

on or with child restraints must be carefully worded so as not to confuse caregivers or cause unintended responses to it. For example, the agency is concerned that a statement such as, ''This CRS has not been tested in side impacts for the protection of children weighing more than 18.1 kg (40 lb)'' may be interpreted by some as saying the CRS is not regulated in any way under any Federal standard, since an average consumer is unlikely to know the applicability or extent of FMVSS No. 213 versus FMVSS No. 213a. Before adopting such a labeling requirement, NHTSA should evaluate the risk that a caregiver might respond to the label by deciding to forgo use of a booster seat or other CRS entirely when the child reaches 18.1 kg (40 lb). Such an outcome would lead to a degradation of child passenger safety. NHTSA is also concerned that the statement might dampen efforts on the part of researchers and engineers to develop potential improvements to side impact protection for older children, such as by developing data-driven countermeasures using methods (*e.g.,* mathematical models along with human body models) that simulate the side impact test of this final rule.

2. Head Under Window Sill

Advocates suggested that instructions to parents (either in vehicle manuals or other sources) should indicate that children below a certain height, or whose head does not reach entirely above the sill of the vehicle window, should be restrained properly in a safety seat since they may not be afforded protection by side impact safety requirements designed to protect adults. The commenter suggested that a similar form of diagram and wording on booster seats for taller and/or heavier children would also assist parents in selecting the proper seating method to ensure protection. The law students suggested that the packaging should indicate that children whose heads do not reach above the windowsill should be restrained in a CRS.

Agency Response

NHTSA is declining these suggestions to adopt the measures in this final rule. The agency would like to know more about the need for such instructions and their effectiveness. NHTSA is conducting a research program to determine a minimum boosting height for CRSs recommended for children weighing more than 18.1 kg (40 lb). As a first step, NHTSA evaluated the boosting height of current booster seat designs recommended for children weighing more than 18.1 kg (40 lb). The evaluation included posture and belt fit measures for 24 child volunteers aged 4 to 12 seated in six different booster seat models that were installed in 3 different vehicle models and in laboratory seating conditions representing the range of cushion lengths and belt geometries in later model vehicle rear seats.[116] Among the program's next steps, the research will seek to determine whether CRS seating platforms should be at least a minimum height to position the head of the child high enough to benefit from vehicle side impact protection countermeasures. If a minimum boosting height can be determined, NHTSA may consider rulemaking to specify a minimum boosting height. Results from NHTSA's research will help inform the agency as to whether the suggested warning label is merited for some CRSs.

VII. Aspects of the FMVSS 213a Test Procedure

NHTSA developed this final rule to replicate a vehicle-to-vehicle intersection crash. NHTSA explained in the NPRM that this side impact is best replicated in a test procedure that reflects the dynamic elements of both the striking and struck vehicle in the crash. NHTSA stated that a side impact test procedure should account for: (1) the struck vehicle door velocity prior to the interaction of the striking vehicle with the door sill of the struck vehicle, (2) the acceleration profile of the struck vehicle, and (3) the impact angle to replicate the longitudinal component of the direction of force. NHTSA concluded that basing the specification of these parameters on actual vehicle crash characteristics would enable the realistic simulation of the relative velocity between the intruding door and the CRS. Accordingly, the agency developed FMVSS No. 213a to simulate a full-scale vehicle-to-vehicle side impact based on the MDB requirements of FMVSS No. 214, ''Side impact protection.'' [117]

Introduction

To simulate the side impact crash for purposes of testing CRS performance, NHTSA proposed using a dynamic sled test based on an acceleration sled system [118] that was developed by Takata.[119] The Takata procedure is based on an acceleration sled with a test buck consisting of a sliding ''vehicle'' seat (representative of a rear seat designated seating position) mounted to a rail system, along with a ''side door'' structure rigidly mounted to the sled buck structure. Aluminum honeycomb is mounted below the side door structure. The side door is made to reach a desired velocity prior to the aluminum honeycomb contacting the sliding ''vehicle'' seat structure. Together, the sliding seat and door structure are referred to as the side impact seat assembly (SISA). Figure 3 shows the Takata sled system test procedure.

BILLING CODE 4910–59–P

[116] Klinich, Kathleen D., Jones, Monica H., Manary, Miriam A., Ebert, Sheila H., Boyle, Kyle J., Malik, Laura, Orton, Nichole R., Reed, Matthew P., (2020, April). *Investigation of potential design and performance criteria for booster seats through volunteer and dynamic testing* (Report No. DOT HS 812 919). Washington, DC: National Highway Traffic Safety Administration. Link: *https://rosap.ntl.bts.gov/view/dot/49119.*

[117] As explained above in this document, FMVSS No. 214 specifies performance requirements for the protection of occupants in side impact crashes. In a full-scale crash test representing a severe intersection collision between two passenger vehicles, FMVSS No. 214 requires passenger vehicles to protect occupants when the vehicle is struck on either side by an MDB simulating an impacting vehicle. The FMVSS No. 214 MDB crash test involves an MDB weighing 1,360 kg (3,000 lb), to represent a vehicle which is traveling at 48.3 kilometers per hour (km/h) (30 miles per hour (mph)) striking the side of another vehicle which is traveling at 24 km/h (15 mph). In the FMVSS No. 214 test, only the striking ''vehicle,'' represented by the MDB, is moving. Using vector analysis, the agency combined the impact speed and impact angle data in crash files to determine that the dynamics and forces of a crash in which a vehicle traveling at 48.3 km/h (30 mph) perpendicularly strikes the side of a vehicle traveling at 24.1 km/h (15 mph) could be represented by a test configuration in which: the test vehicle is stationary; the longitudinal centerline of the MDB is perpendicular to the longitudinal centerline of the test vehicle; the front and rear wheels of the MDB are crabbed at an angle of 27 degrees to the right of its longitudinal centerline in a left side impact and to the left of that centerline in a right side impact; and the MDB moves at that angle and at a speed of 54 km/h (33.5 mph) into the side of the struck vehicle.

[118] An acceleration sled is accelerated from rest to a prescribed acceleration profile to simulate the occupant compartment deceleration in a crash event. In comparison, a ''deceleration sled'' is first accelerated to a target velocity and then is decelerated to a prescribed deceleration profile to simulate the same event.

[119] *See* Docket No. NHTSA–2007–26833–0023 for a transcript of the February 8, 2007 meeting where Takata gave a presentation on its side impact test procedure. NHTSA also published two papers on the agency's research and testing on the Takata test procedure (Sullivan (2009) and Sullivan (2011), discussed *infra*).

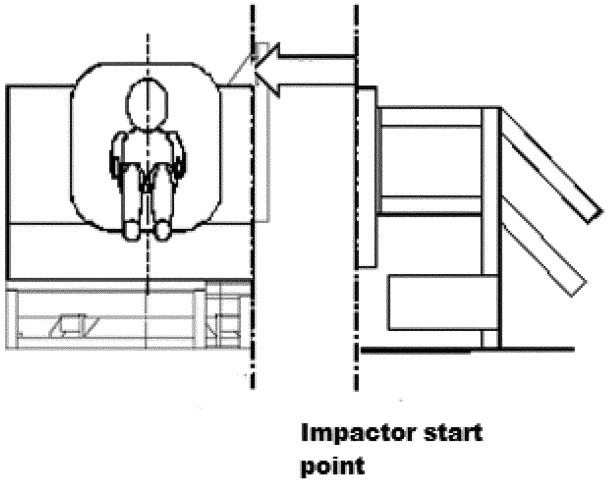

(a) Pre-Test Condition

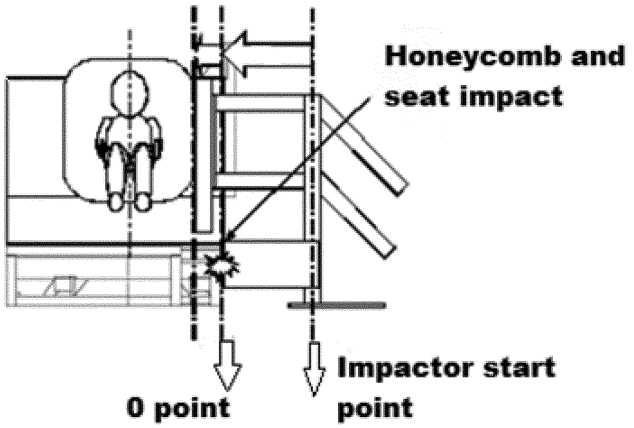

(b) At Time of Door Contact With CRS

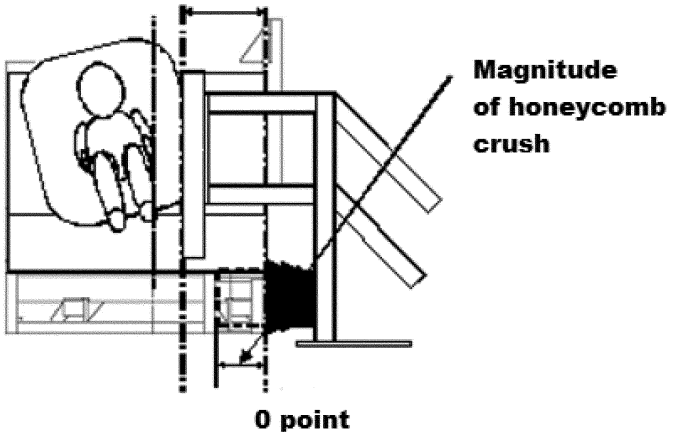

(c) At End of Test

Figure 3 - Takata Side Impact Sled System--(a) Pre-test condition, (b) at time of door contact with CRS, and (c) at end of test (final travel of door).

BILLING CODE 4910–59–C

NHTSA conducted three studies in advance of the NPRM to identify test parameters that would adapt the Takata sled system for use in FMVSS No. 213a. NHTSA's 2009 Initial Evaluation of Child Side Impact Test Procedures [120] used a modified Takata test buck to

[120] Sullivan, L.K., Louden, A.E., ''NHTSA's Initial Evaluation of Child Side Impact Test Procedures,'' 21st International Conference on the Enhanced Safety of Vehicles, Paper No. 09–0539, 2009 [hereinafter Sullivan et al. (2009)].

develop test parameters that would simulate the FMVSS No. 214 test procedure. The selected parameters were based on ten vehicles that had previously been tested in accordance with FMVSS No. 214 and a series of four full-scale crash tests. NHTSA concluded that the sled test procedure appeared to be repeatable and could distinguish between child restraint models using some of the injury measures. Comparison of results from side impact sled tests using the Q3s dummy with comparable full-scale vehicle side impact crash tests indicated that the dummy responses exhibited similar trends in the sled and full vehicle crash tests. NHTSA also announced its intention to perform further sled testing to refine test parameters such as door stiffness and geometry, and to further assess issues such as the effect of an armrest on CRS kinematics and dummy responses.

The follow up to NHTSA's initial evaluation, NHTSA's 2011 Evaluation of a Potential Side Impact Test Procedure,[121] presented subsequent tests and vehicle surveys conducted to determine characteristics of various components of side impact test bucks such as the seat cushion, door panel, and an armrest that would result in improved real world representation of the side impact sled test procedure.

NHTSA also conducted a vehicle survey [122] to examine the geometry and contact characteristics of vehicle rear seats in order to select the geometry and material characteristics necessary to replicate the physical environment of a typical rear seat in a side impact test. The 2012 Vehicle Rear Seat Study recorded measurements of 43 individual rear seating position in 24 model year 2010 vehicles to obtain dimensional characteristics of rear seat attributes that could affect the performance of CRS in the rear seat compartment. In addition, NHTSA surveyed the features of vehicle child restraint anchorage systems in furtherance of the agency's data on the systems. As discussed further below, NHTSA relied on these measurements to create a rear seat environment for the SISA that represented vehicles in the modern fleet.

NHTSA's studies showed that the Takata-based test procedure demonstrated versatility for tuning parameters to obtain the desired test environment. NHTSA could tune the parameters to simulate the two-vehicle side crash replicated in the MDB test of FMVSS No. 214. NHTSA also noted that the test could be easily modified to change the impact angle to introduce the longitudinal crash component present in the FMVSS No. 214 tests. In addition, in its preliminary evaluation of the Takata test protocol, after making minor modification to the test parameters [123] NHTSA determined that the test procedure was repeatable and could provide results that distinguished between the performance of various CRS models based on the design of the side wings and stiffness of the CRS padding.[124]

Accordingly, based on the agency's research, NHTSA proposed a side impact test for FMVSS No. 213a based on a refined and improved Takata sled design. In addition, the NPRM proposed test specifications developed by NHTSA ensuring the test procedure appropriately simulates the FMVSS No. 214 MDB test, including the velocity of the striking vehicle, the struck vehicle and the intruding door. Specifically, the NPRM proposed the following specifications of the sled test to simulate the FMVSS No. 214 MDB impact test of a small passenger car with the child dummy restrained in a CRS positioned in the rear seat near-side of the impact:

1. The test buck consists of a sliding seat mounted to a rail system along with a ''side door'' structure rigidly mounted to the sled buck structure. The sliding seat and side door are representative of today's passenger vehicles. The sliding seat of this ''side impact seat assembly'' (SISA) is positioned sufficiently away from the side door to allow the sled to reach a desired velocity (31.3 km/h) prior to the time the sliding seat starts to accelerate to a specific acceleration profile.

2. The center of the CRS is positioned 300 mm from the edge of the sliding seat next to the intruding door (simulating a near-side position). At the time the sliding seat starts to accelerate, the armrest on the door is located 32 mm (1.3 inches) from the edge of the seat towards the CRS.

3. CRSs would be installed on the sliding seat using CRAS. Belt-positioning seats covered by the NPRM would be tested using a lap and shoulder belt on the sliding seat of the SISA.

4. NHTSA proposed injury criteria (expressed in terms of HIC15 and chest deflection) for the Q3s. We proposed just to require head containment of the 12-month-old CRABI (assess the ability of the CRS to prevent the ATD's head from contacting the intruding door of the SISA). In addition, the NPRM proposed to require CRSs to meet structural integrity requirements when tested with the respective ATDs, and other assorted performance criteria for belts and buckles.

a. Overview

In this final rule, NHTSA finalizes a test procedure that builds on the SISA and test specifications proposed in the NPRM. The agency has adjusted the final test procedure from that proposed in the NPRM, after considering the comments, results of additional testing of the SISA, and the agency's work on the proposed FMVSS No. 213 frontal test procedures.[125] As discussed further below, we modified the SISA to minimize variability in installation, make the SISA equipment more durable, and better match the proposed frontal FMVSS No. 213 seat assembly. In addition, we further specified some of the side test parameters, including a relative door velocity profile and the distance of the door armrest to the vehicle seat, to improve the repeatability and reproducibility of the test procedure. The final SISA and test specifications are discussed below in turn.

b. Side Impact Seat Assembly Characteristics

The side impact seat assembly (SISA) consists of a sliding ''vehicle'' seat mounted to a rail system, along with a side door structure rigidly mounted to the sled buck structure. In the NPRM, NHTSA described the agency's efforts to ensure that the sliding ''vehicle'' seat and side door would be representative of today's passenger vehicles. Both NHTSA's initial evaluation studies and the 2012 Vehicle Rear Seat Study, discussed above, examined the geometry and contact characteristics of present-day vehicle rear seats. The agency used this information to design a seat assembly with the geometry and material characteristics that were necessary to replicate the physical environment of a typical rear seat relevant to the side impact test. NHTSA identified the following rear seat features to replicate in the SISA: (1) rear seat geometry (seat back angle, seat pan angle, beltline height from approximately the vehicle seat bight (*i.e.,* the intersection of the seat cushion

[121] Sullivan, L.K., Louden, A.E., Echemendia, C.G. ''NHTSA's Evaluation of a Potential Child Side Impact Test Procedure'' 22nd International Conference on the Enhanced Safety of Vehicles, ESV Paper No. 2011–0227, 2011 [hereinafter Sullivan et al. (2011)].

[122] Aram, M.L., Rockwell, T., ''Vehicle Rear Seat Study,'' Technical Report, July 2012. Docket No. NHTSA–2014–0012, Item No. 0005 (hereinafter 2012 Vehicle Rear Seat Study).

[123] Sullivan et al. (2009).

[124] Sullivan et al. (2011).

[125] *See* NPRM, 85 FR 69388, November 2, 2020, *supra.*

and the seat back), height of the top of the armrest (from the seat bight)), (2) rear seat cushion stiffness, and (3) door shape (height of window, armrest thickness (protrusion of the armrest from the door [126])) and padding.

In addition, NHTSA performed a series of sled tests as a sensitivity analysis to better understand the effect of the sled system configuration on dummy responses.[127] The parameters evaluated were the seat cushion stiffness, door padding stiffness, presence of armrest, and windowsill height.

Based on the agency's research, NHTSA proposed using a SISA for the FMVSS No. 213a test procedure that modified aspects of the original Takata sled specifications to make the SISA better represent the rear seat environment. Figure 4 shows the proposed SISA.

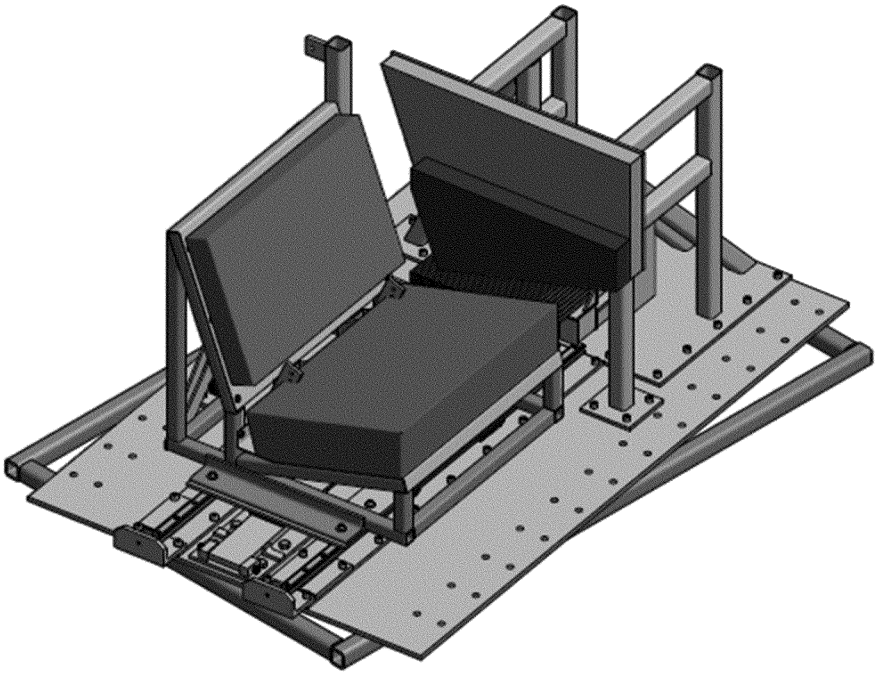

Figure 4. Proposed SISA Depiction from the NPRM SISA Drawing Package (For illustration purposes only)

The proposed SISA had the following specifications:

- A single seating position representing a rear outboard seating position.
- Seat back and seat pan angles of 20 and 15 degrees, respectively, which is the same as the original Takata buck. Both angles were well within the ranges found in NHTSA's vehicle survey, and those angles were the same as the ECE R.44 bench seat.
- ECE R.44 rear seat cushion foam. NHTSA proposed using this foam because it was more representative of the stiffness of current rear seats in the vehicle fleet than other cushion foams surveyed (FMVSS No. 213, NPACS). However, NHTSA also noted that sensitivity studies showed seat foam cushion stiffness had little effect on dummy responses in the side impact test procedure.
- A 64 mm (2.5 inches) thick armrest attached to a 51 mm (2 inches) thick door panel. The armrest was a ''stiff'' foam (United Foam #4), attached to an ''average'' stiffness foam padding door (Ethafoam 220). NHTSA stated that this configuration appeared to be representative of the rear seat environment, and the armrest stiffness using the ''stiff'' United Foam #3 was within the range of armrest thickness of surveyed vehicles. Importantly, dummy responses with this armrest/door configuration were similar to those seen in vehicle crash tests.[128]
- A beltline height of 500 mm (19.6 inches). Although this value was slightly higher than the average beltline height of vehicles surveyed (489 mm), NHTSA proposed the 500-mm value to ensure that the proposed side impact test was sufficiently stringent to account for vehicle beltlines that were higher than the average value.
- Lower anchorages of the CRAS symmetrically located on either side of the centerline of the simulated outboard seating position of the SISA bench seat. The location of the top tether anchorage was on the lower rear frame of the seat, similar to the typical location of a tether anchorage in captain's seats in minivans.

In addition to these aspects of the SISA that the agency discussed in the preamble, NHTSA included detailed drawings of the SISA in the docket for the NPRM, which further specified materials and measurements of every part of the SISA.

While NHTSA welcomed comments on all aspects of the proposed rule, the agency sought comment on specific aspects of the SISA, including the proposed seat cushion foam and seat

[126] The original Takata sled buck did not include an armrest. NHTSA modified the sled buck to include an armrest.

[127] Sullivan et al. (2011).

[128] Sullivan et al. (2011).

cushion assembly. In addition, NHTSA had stated the agency had initiated a research program to evaluate how the test parameters of the FMVSS No. 213 frontal sled test should be updated to reflect any significant real-world developments.[129] The agency stated it planned to develop a test bench seat with seat cushion stiffness that has characteristics of seat cushions in recent vehicle models, pursuant to MAP–21's mandate to amend the standard seat assembly specifications under FMVSS No. 213's frontal test ''to better simulate a single representative motor vehicle rear seat.'' [130] NHTSA stated in the NPRM for side impact [131] that it would consider, to the extent possible under the timeframes for the research and rulemaking programs, the merits of using this updated frontal test seat cushion foam in the side impact sled.

Since publication of the 2014 NPRM, NHTSA continued to develop a standard seat assembly for upgrading the FMVSS No. 213 frontal impact sled test using the SISA sliding seat as a starting point. The November 2, 2020 NPRM proposing amendments to FMVSS No. 213 described the agency's continued work updating aspects of the vehicle rear seat environment, such as the seat back height, seat cushion stiffness, and CRAS and seat belt anchorage locations, so that the frontal impact seat assembly would be more representative of vehicle rear seats. The proposed standard seat assembly for the frontal impact sled test is similar to the proposed SISA sliding seat, although the proposed frontal impact seat assembly has some more up-to-date specifications for features such as the seat cushion thickness, seat back height and anchorage locations. These differences were described in detail in the November 2, 2020 NPRM.[132]

In the November 2020 NPRM, NHTSA sought comment on whether the side impact test seat assembly and the seat assembly proposed in the 2020 NPRM should be consistent.[133] NHTSA stated in the November 2, 2020 NPRM that using the same specifications of the standard seat assembly (including seat geometry, seat cushion, and anchorage locations) for both the side impact test and a frontal impact test would make sense, since the agency is seeking to test CRSs on a representative seat assembly and the same passenger vehicles are involved in side and frontal crashes.

The agency also stated that the standard seat assembly proposed in the January 2014 side impact NPRM is substantially like the seat proposed in the November 2020 NPRM, but that NHTSA believes the seat assembly proposed in the November 2020 NPRM is a better seat assembly primarily regarding the cushion foam. NHTSA explained that the January 2014 NPRM specified use of the ECE R.44 seat cushion, while the November 2020 proposed seat assembly incorporates seat cushion foam that is more representative of the seat cushion stiffness of the current vehicle fleet. NHTSA stated that the proposed seat cushion ''is also easier to procure than the ECE R.44 foam. Commenters to the January 2014 side impact NPRM expressed concerns about the difficulty to source the ECE R44 seat foam, which is only available from one overseas supplier. [Footnote omitted.] NHTSA tentatively believes that using the foam specified in this NPRM for the frontal test seat assembly would alleviate those concerns.''

Four commenters (Evenflo, Cybex, Graco and Consumer Reports) to the November 2, 2020 frontal upgrade NPRM expressed support for having consistent side and frontal impact test seat assemblies in FMVSS No. 213 and FMVSS No. 213a, respectively. Evenflo noted that using the same seat assembly in both test methods will reduce variables in assessing a CRSs. Cybex commented that having a more representative seat assembly as the one proposed for the frontal impact sled test would be beneficial to real-world crashworthiness. No commenter opposed having consistency between the seat assembly used in the frontal and side impact sled tests.

NHTSA is moving forward with a SISA that differs from the 2014 proposed SISA in some respects to make it more representative of rear seats in the current vehicle fleet, to address comments, and to better align the SISA with the proposed seat assembly for the FMVSS No. 213 frontal impact test. These structural changes and the agency's responses to other comments on the SISA are discussed in detail, below. Other minor modifications, like minor changes to accelerometer placement and the addition of stiffening structures to reduce vibrations, are discussed more at length in the ''FMVSS No. 213 Side Impact Test Evaluation and Revision'' report included in the docket for this final rule.[134]

NHTSA believes that the above modifications make the SISA better representative of the rear seat environment and better able to reproduce the characteristics of a side impact. In addition, these modifications address comments on the availability and durability of materials used in the SISA, and address comments on repeatability and reproducibility of the final test procedure. Importantly, and as discussed further below, NHTSA performed tests with the final SISA configuration to compare the test results with those using the proposed SISA, and concluded that test results with the updated SISA in this final rule are not significantly different from those with the proposed SISA. The following sections discuss comments on aspects of the sliding seat, door, and maintenance of the SISA.

1. Seat Characteristics

i. Rear Seat Cushion Stiffness

To determine the stiffness of the seat foam for the proposed SISA, NHTSA considered several data points. We considered the vehicle survey that measured the rear seat cushion stiffness of 13 vehicles, as well as the seat cushion stiffness of the seat cushions used in FMVSS No. 213, the United Nations Economic Commission for Europe, ''Uniform provisions concerning the approval of restraining devices for child occupants of power-driven vehicles (child restraint systems)'' (ECE R.44), and the New Programme for the Assessment of Child Restraint Systems (NPACS) [135] programs.[136] The results of the survey showed that the FMVSS No. 213 foam was softer than all the vehicle seat foams surveyed. The ECE R.44 and NPACS foams were stiffer than the FMVSS No. 213 foam, and more representative of the vehicles surveyed. However, NHTSA's sensitivity analysis to determine the effect of the seat cushion stiffness on dummy readings and CRS performance showed that seat cushion foam stiffness had little effect

[129] NHTSA Vehicle Safety and Fuel Economy Rulemaking and Research Priority Plan 2011–2013 (Docket No. NHTSA–2009–0108–0032).

[130] Quoting MAP–21, § 31501(b), ''Frontal Impact Test Parameters.''

[131] 79 FR at 4586, col. 2.

[132] 85 FR at 69393.

[133] *Id.,* col. 2–3.

[134] Louden & Wietholter (2022).

[135] The NPACS consortium was funded in 2005 by governments of the United Kingdom, the Netherlands, Germany, the Generalitat of Catalonia, and five non-governmental organizations. The objective of NPACS is to provide scientifically based EU wide harmonized test and rating protocols to offer consumers clear and understandable information about dynamic performance and usability of child restraint systems. NPACS is similar to NHTSA's New Car Assessment Program (NCAP), and to the NCAP program administered in Europe (EuroNCAP), in that NPACS is a voluntary consumer information program, rather than a binding regulation. (Note, however, that NPACS is designed to test CRSs, while NCAP focuses on vehicle performance.)

[136] Sullivan et al. (2011).

on the dummy responses in these side impact tests.

Accordingly, NHTSA initially proposed that the seat cushion foam for the SISA have the stiffness of the ECE R.44 seat foam, given that the ECE R.44 foam was more representative of the current rear seats in the vehicle fleet than the FMVSS No. 213 cushion foam. At that time, NHTSA had not yet developed the NHTSA-Woodbridge seat cushion foam, so NHTSA stated that the agency preferred the ECE R.44 foam over the NPACS foam because although the two foams were similar in stiffness, the ECE R.44 foam was more readily available than the NPACS foam. NHTSA invited comment on this proposed seat cushion foam and seat cushion assembly.

NHTSA also stated that the agency had initiated a research program to evaluate how the test parameters of the FMVSS No. 213 frontal sled test should be updated to reflect any significant real-world developments. Within this program, NHTSA planned to develop a test bench seat with seat cushion stiffness characteristic of seat cushions in recent vehicle models. NHTSA stated that the agency would consider, to the extent possible under the timeframes for the research and rulemaking programs, the merits of using this updated seat cushion foam in the side impact sled.

Comments Received

CU, Dorel, Graco and UPPAbaby commented that the ECE R.44 foam was appropriate for side impact testing. CU and UPPAbaby also suggested including the same foam in the FMVSS No. 213 frontal impact test. CU added that the ECE R.44 foam should be used in the frontal impact FMVSS No. 213 test because a stiffer standard seat foam may result in larger performance differences among CRSs than that with the current standard seat assembly in the FMVSS No. 213 frontal impact test.

Relatedly, while MGA did not provide specific comments on the proposed seat foam, MGA did state that there are few areas where FMVSS No. 213 and FMVSS No. 213a could be harmonized with regards to the seat cushion. Specifically, MGA stated that the cover material, foam insert, and overall assembly for the seat cushion could be harmonized, referencing FMVSS No. 213's leather type zippered cover over two softer pieces of foam, compared to the FMVSS No. 213a's cloth type cover wrapped over a single piece of stiffer foam. Similarly, Graco requested that NHTSA consider the use of the same foam for frontal crash testing as used in side testing in any future improvements to FMVSS No. 213.

An individual, Mr. Hauschild, commented that the seat foam needs to be representative of the current vehicle fleet, and added that research has shown that the foam of the FMVSS No. 213 standard seat assembly for forward-facing seat testing reacts differently than vehicle manufacturer seats and can influence the performance of the CRS (citing Tylko et al., 2013 [137]). Graco agreed with the use of standard seat foam that is more representative of current vehicles.

Britax, JPMA, and Graco noted the difficulty to source the ECE R.44 foam. Britax stated that while it did not oppose the use of the ECE R.44 foam in principal, it strongly recommended that NHTSA survey the marketplace to better determine the availability of this type of foam for U.S. CRS manufacturers. Britax stated that the ECE R.44 foam is not readily available and to require its use for side impact testing may create a considerable hardship both from a cost and availability perspective. Britax stated that supplying consistent foam for FMVSS No. 213 standard seat assembly requirements has been a challenge for all CRS manufacturers who engage in internal sled testing. Britax explained that it has always been difficult to source cost effective supplies of foam that have the density, stiffness and qualities necessary for sled testing. Britax suggested that, since the seat cushion foam stiffness has minimal effect on dummy responses (as stated by the agency), it may be a reasonable solution to continue to permit the use of FMVSS No. 213 seat cushion foam. Graco explained that various parties use different types of foam due to the difficulty of sourcing the foam.

Britax and Graco also commented on the importance of having sufficient foam specifications to source the foams. Britax stated that it would be essential to specify foam density and content. Graco requested that NHTSA provide clear seat foam drawings, material definition, indentation load-displacement (ILD) properties and a seat foam test methodology.

JPMA commented that all members were concerned with viable competitive test equipment sourcing and availability and that it believed a single source and supply with no competition is untenable.

Agency Response

NHTSA's research program to develop a standard seat cushion with similar characteristics of seat cushions in more recent vehicle models resulted in the development of a foam, referred to as the ''NHTSA-Woodbridge'' [138] seat cushion foam,[139] that the agency proposed to use in the November 2, 2020 NPRM to upgrade the frontal impact seat assembly. In that NPRM, NHTSA noted that after additional research and testing,[140] the agency determined that the ECE R.44 and NPACS seat foam stiffness were not representative of the U.S. vehicle fleet (in both quasi-static and dynamic stiffness). Specifically, Figure 5 below shows that the ECE R.44 and NPACS foams were found to be stiffer than the vehicle fleet. The FMVSS No. 213 foam, tested on the standard seat assembly with a cover, is on the low end of the vehicle fleet rear seat stiffness. The NHTSA-Woodbridge seat cushion shows an average dynamic stiffness response compared to the vehicle rear seats sample.

[137] Tylko, S., Locey, C.M., Garcia-Espana, J.F., Arbogast, K.B., & Maltese, M.R. 2013. Comparative performance of rear facing child restraint systems on the CMVSS 213 bench and vehicle seats. Ann Adv Automot Med 2013. 57, 311.

[138] The Woodbridge Group is a supplier of automotive seat foam, *http://www.woodbridgegroup.com.*

[139] The NHTSA-Woodbridge seat cushion consists of the foam material covered by the cover used in test procedures of ECE R.44. The ECE R.44 cover material is a sun shade cloth made of poly-acrylate fiber with a specific mass of 290 (g/m^2) and a lengthwise and breadthwise breaking strength of 120 kg (264.5 pounds) and 80 kg (176.3 pounds), respectively.

[140] Wietholter, K., Louden, A., Sullivan, L., & Burton, R. (2021, September). Evaluation of seat foams for the FMVSS No. 213 test bench. Washington, DC: National Highway Traffic Safety Administration.

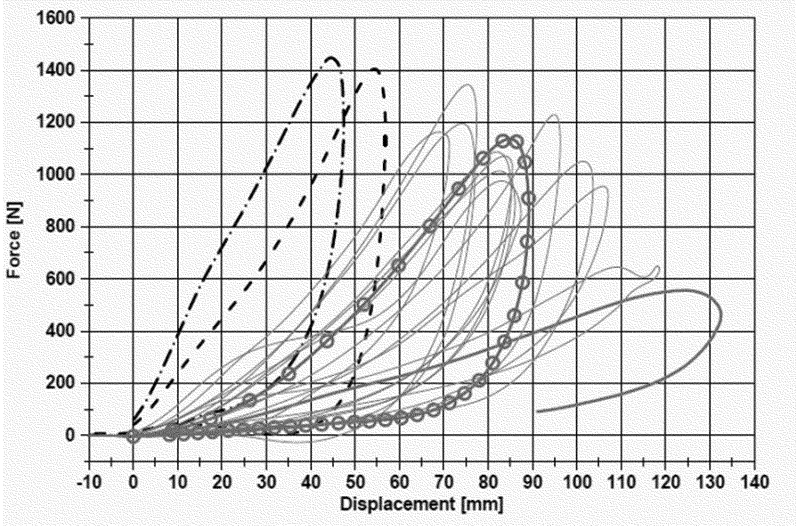

Figure 5. Dynamic force-displacement (stiffness) of ECE R.44 seat foam (black-dashed), NPACS seat foam (black-dashes and dots), FMVSS No. 213 seat cushion (dark grey solid), seat cushions on vehicle rear seats (light grey solid), and the November 2020 proposed NHTSA-Woodbridge seat cushion (solid with circles).

NHTSA is adopting the NHTSA-Woodbridge seat cushion foam in the SISA because it has characteristics that best represent an average vehicle rear seat in the United States. In addition, the NHTSA-Woodbridge seat cushion foam is easier to procure than the ECE R.44 foam proposed for use in the 2014 NPRM. To simplify procurement of the desired seat cushion foam, NHTSA's FMVSS No. 213 Side Impact Test Evaluation and Revision report sets forth characteristics of the NHTSA-Woodbridge seat cushion foam.[141] Further details of seat cushion characteristics are available in the drawings that are in the docket for this final rule. In response to Britax, Graco, and JPMA's concerns about the ability to source cost-effective seat cushion foam, NHTSA launched a program to identify foam manufacturers and has found four sources that can provide the specified foam. These sources are available in the report, ''Foam Feasibility Study,'' [142] that is available in the docket for this final rule.

In response to MGA's comment that the seat cover material, foam insert, and overall assembly for the seat cushions could be harmonized between FMVSS No. 213 and 213a, the agency has taken steps to keep FMVSS No. 213a as harmonized as possible with the FMVSS No. 213 frontal seat assembly proposed on November 2, 2020. This includes the cover material, foam insert, and overall assembly of the seat cushions. NHTSA agrees that there are benefits to harmonizing FMVSS No. 213 and 213a to the extent possible, and that it makes sense that the seat assembly used to represent vehicle seats in the side crash test would be similar to the seat used in the frontal test.

While CU, Dorel, Graco and UPPAbaby considered the ECE R.44 seat foam appropriate for side impact testing, NHTSA's additional research shows that the ECE R.44 foam is stiffer than an average vehicle rear seat. The NHTSA-Woodbridge foam is softer than the ECE R.44 foam and is a good representation of the average cushion stiffness of rear seats in the current vehicle fleet. This also accords with Mr. Hauschild and Graco's suggestion to have a seat foam that is representative of the current vehicle fleet.

In the November 2, 2020 NPRM upgrading the FMVSS No. 213 frontal impact seat assembly, NHTSA proposed the NHTSA-Woodbridge seat cushion foam thickness of 4.0 ± 0.5 inches (101.6 ± 12.7 mm). JPMA and Graco expressed concern regarding the proposed tolerance of the seat cushion thickness in their comments to the November 2, 2020 NPRM, noting that the proposed tolerance in the seat cushion thickness (±0.5 inches (±12.7 mm)) could result in increased test variability. JPMA reiterated its concerns regarding the proposed tolerance in the seat cushion foam thickness in a meeting with NHTSA on December 15, 2021,[143] and provided sled test results showing variability in performance measures when tested with seat foam thicknesses ranging between 3.67 to 4.42 inches (93.2 to 112.3 mm). NHTSA agrees with the commenters on this issue and sees merit in reducing the tolerance of the seat cushion thickness to a level that would reduce variability in testing, while also ensuring availability of foam that meets specifications. After reviewing all available information, NHTSA is specifying a NHTSA-Woodbridge seat cushion foam thickness of 4.0 ± 0.25 inches (101.6 ± 6.35 mm). This change is reflected in the drawing package incorporated by reference by this final rule.

Due to the change in seat cushions from the ECE R.44 foam (which is 127 mm (5 inches) thick) to the NHTSA-Woodbridge cushion (which is 101.6 mm (4 inches) thick), NHTSA modified the SISA to account for changes to the seat cushion height. Using a thinner seat cushion lowered the position of the installed CRS on the seat assembly with respect to the door and armrest height, so the agency lowered the position of the door and armrest by about 25.4 mm (one inch) so that their relative position with respect to the installed CRS in the seat assembly are the same as that in the

[141] Louden & Wietholter (2019).

[142] ''Foam Feasibility Study by National Center for Manufacturing Sciences'' (NHTSA, June 2018). This document is in the docket for this final rule.

[143] We submitted a memorandum summarizing this meeting to Docket No. NHTSA–2014–0012.

2014 proposal (which is representative of the current vehicle fleet). This is discussed further in the section below on the SISA's door and armrest thickness and stiffness.

ii. Lower Anchorages and Top Tether Anchorages of the CRAS

FMVSS No. 213 currently requires CRSs to be capable of being secured to a vehicle seat with the child restraint anchorage system (CRAS), and to meet the frontal crash requirements of the standard when using the CRAS. A CRAS consists of two lower anchorages and one upper tether anchorage. Each lower anchorage includes a rigid round rod or ''bar'' onto which a hook, a jaw-like buckle or other connector can be snapped. The bars are located at the intersection of the vehicle seat cushion and seat back. The upper tether anchorage is a ring-like object to which the upper tether of a CRS can be attached. (FMVSS No. 213 also requires that CRSs must be capable of being secured to a vehicle seat using the vehicle's seat belt system.)

NHTSA proposed that CRSs covered in the proposal, other than belt-positioning seats, meet the side impact performance requirements when attached to the SISA with the lower attachments of the CRAS. NHTSA also proposed that forward-facing CRSs supplied with a top tether may have that top tether attached during testing if the written instructions accompanying the CRS instruct owners to attach the top tether when using the restraint. As discussed further in a section below, NHTSA has adopted the above provisions in the test procedure for this final rule.[144] This section discusses the proposed specifications for the CRAS lower anchorages and top tether anchorages on the SISA, comments received, and the final specification of the anchorages.

NHTSA proposed that the SISA be equipped with 2 inches (50.8 mm) wide CRAS lower anchorages that were symmetrically located on either side of the centerline of the simulated ''outboard seating position'' of the SISA seat. NHTSA proposed that the top tether anchorage be located on the lower rear frame of the seat, similar to the typical location of a tether anchorage in captain's seats in minivans. The exact locations of the proposed CRAS lower anchorages and tether anchorages were included in drawings posted to the docket for the NPRM.

Comments Received

UMTRI commented that the width of the lower anchor bars on the buck appeared to be 2 inches, rather than the 1-inch minimum required in FMVSS No. 225, ''Child restraint anchorage systems,'' and most commonly used by vehicle manufacturers. UMTRI noted that in the NPRM, NHTSA stated that a European side impact test method was not suitable for testing U.S. products because it allows the connectors to slide. The commenter believed use of a 2-inch wide anchor rather than a 1-inch wide anchor may have the same effect and be unrealistic relative to the U.S. market.

MGA provided comments identifying potential interference of the SISA intruding door with the anchorage locations. First, MGA identified that because the lower anchor assembly protrudes through the seat bight, it was found to contact some CRS bases during their testing. In addition, MGA stated that the lower anchor assembly interferes with both the corner of the door fixture and the bottom of the seat cushion. MGA suggested that if the NPRM specifications for lower anchor location were desirable, the cushion foam design could be adjusted to accommodate the anchor, or the designed cutout in the seat foam could be made smaller and still provide clearance for the anchor assembly. MGA believed that a smaller cutout would provide the benefit of a larger area for the CRS to sit during the test.

Agency Response

Modifications to the SISA have resulted in some changes to the lower anchorages. First, in response to MGA's comment, NHTSA updated the lower anchor location and cushion design and specifications to eliminate the lower anchor interference with CRS bases, corner of the door fixture, and seat foam. NHTSA also eliminated the foam cutouts, as discussed further below. In making these modifications, NHTSA also made the SISA lower anchorage locations consistent, as practically possible, with the lower anchorage locations in the proposed standard seat assembly of the frontal impact sled test. In addition, NHTSA decreased the anchorage width to 1.5 inches (38.1 mm). This is wider than those generally found in vehicles, but is within the 60-mm maximum allowable anchorage width specified in FMVSS No. 225. Because the standard seat assembly is used repeatedly and the anchorages will be subjected to a crash environment repeatedly, the new lower anchorages were made more robust than the anchorages in a vehicle, and designed in a way that allows easy replacement when the anchorages are deformed.

In response to UMTRI, while these wider anchorages may allow some movement of the CRS on the sliding seat assembly during the impact, the movement is slight and nowhere comparable to the European sliding anchors that allow 200–250 mm (7.87–9.84 inches) of movement. NHTSA has not measured the displacement of the CRS on the seat assembly during the impact event; however, in the 2014 NPRM the agency compared the dummy kinematics and injury measures in the side impact sled test to that in a vehicle side impact test and found them to be similar. NHTSA believes the effect of this sliding due to the length of the anchorage is minimal.

Comments Received

SRN requested that the proposed tether anchor location be further reviewed because a tether anchor located lower on the back of the seat has been shown to be less effective in far side impact testing.[145] SRN argued that using a high tether anchor position on the proposed SISA would have an additional benefit even if it were not required for compliance in near side crashes. SRN stated that this would simplify the process for manufacturers to conduct voluntary center and far-side impact testing using a SISA configuration that more closely resembles the real world. Similarly, UMTRI questioned why the top tether location on the SISA was located on the lower seat back, instead of on a location representing the rear filler panel, as with the FMVSS No. 213 frontal impact standard seat assembly. UMTRI also argued that top tether anchorages located on the rear filler panel is more commonly found in vehicles. MGA commented that the tether placement for FMVSS No. 213a is located in a position that most closely resembles the floor of a vehicle, while the tether anchor location for current FMVSS No. 213 is in a location that most closely resembles a top shelf. MGA stated that while tether placement differs in all vehicle makes and models, FMVSS No. 213 and 213a should have similar locations for the tethers.

Agency Response

This final rule adopts the proposed location of the tether anchorage. As discussed above, the SISA tether anchorage is located on the lower rear

[144] NHTSA has also adopted a requirement that CRSs be tested with a Type 2 seat belt (lap and shoulder belt) with the child restraint system's top tether attached, if provided.

[145] Klinich et al. ''Kinematics of the Q3s ATD in a Child Restraint under Far-Side Impact Loading, Paper #05–0262.

frame of the seat and is similar to the typical location of a tether anchorage in captains' seats in minivans. The 2012 Vehicle Rear Seat Study found that 45% of the tether anchors were found on the rear shelf location, 40% were found on the seat back, 10% were located on the roof, and 5% in other locations. While a tether anchorage on the rear shelf was found more frequently in the vehicle survey, the agency decided to locate it on the seat back for several reasons. First, NHTSA considered that tether use had no substantive effect on CRS performance in the near-side impact test, because the simulated door impacts the CRS before the tether has significant engagement.[146] Further, a longer distance to the tether anchorage (as found in a seat back tether anchorage position compared to one located in the rear shelf) in a frontal test may result overall in a more stringent test as the tether may experience more webbing elongations when attached to the seat back vs. the rear shelf. Also, NHTSA is interested in keeping the frontal and side impact standard seat assemblies as similar as possible, and agrees with MGA that the FMVSS No. 213 and 213a seat assemblies have similar locations for the tethers. Therefore, the agency decided to keep the tether anchorage locations in a seat back position in both seat assemblies.

The lower anchorage locations from the 2012 Vehicle Rear Seat Survey, the proposed child restraint anchorage locations to the frontal impact test seat assembly,[147] and the updated side impact assembly are shown in Table 16.

TABLE 16—LOWER ANCHORS AND TETHER ANCHOR LOCATIONS FROM (1) THE 24 VEHICLE SURVEY, (2) THE PROPOSED FMVSS NO. 213 FRONTAL IMPACT SLED TEST STANDARD SEAT ASSEMBLY, AND (3) THE FINAL SIDE IMPACT SEAT ASSEMBLY CONFIGURATION (ALL MEASUREMENTS ARE IN MILLIMETERS FROM POINT A[148] OF THE SEAT GEOMETRY MEASURING FIXTURE (SGMF))

	Average from vehicle survey	Proposed frontal test seat assembly (2020)	Final side test seat assembly
Lower Anchors:			
Aft	100 ± 21	58	60
Lateral	137 ± 29	140	141
Vertical (−) Below point A	−12 ± 24	−38	−39
Tether Anchors (Seat Back Position):	.		
Aft	280 ± 88	330	324
Lateral	0 ± 44	0	5
Vertical (−) Below point A	140 ± 281	133	133

UMTRI commented that to allow access to lower anchors, there is a large gap between the bottom of the seatback foam and the top of the seat cushion foam on the seat buck. UMTRI explained that when used with some rear-facing child restraints, the profile of the restraint surface that rests against the seatback may slip into the gap in an unrealistic manner. UMTRI added that in the ECE buck, there is space between the two foam segments, but the seatback foam is angled so there is some foam in the gap. UMTRI stated that this provides a more realistic seatback contour than the proposed SISA buck design.

By way of background, NHTSA designed the side and frontal sled test seat assemblies taking into consideration the current difficulties to install and to measure installation tensions (seat belt and lower anchor). The updated design has proven to allow for easier installation in the buck and in some cases reduced the difficulty of measuring installation tension. During extensive side and frontal impact testing with the updated seat assemblies that have a gap in the seat bight (between the seat back and seat cushion foam), the agency has not seen any issues in CRS placement or during testing as mentioned by UMTRI. Among more than 200 tests conducted on the side impact sled system with rear-facing and forward-facing CRSs, NHTSA did not experience any issues with the seat bight gap. Accordingly, this final rule does not make the requested change.

2. Door Characteristics

i. Beltline Height

NHTSA proposed a beltline (window sill) height of 500 mm (19.6 inches) for the SISA, based on a survey of 24 vehicles. Although the proposed beltline height (500 mm) was slightly higher than the average (494 mm) and median (489 mm) beltline heights of the surveyed vehicles, HIC values were generally higher at the higher beltline height. NHTSA proposed the higher value to ensure that the side impact test was sufficiently stringent to account for vehicle beltlines higher than the average value. Child restraint systems meeting the HIC15 requirement when tested against the 500 mm beltline will likely provide sufficient crash protection in vehicles with a lower beltline, but the opposite may not be valid. CRSs tested against a lower belt line might not adequately protect children in vehicles with the higher (500 mm) beltline design.

Comment Received

CU stated that the NPRM's fleet study of seats seemed to have been conducted at the 479 mm (18.8 inches) height and that even at that lower height, 7 of 12 forward-facing CRSs had HIC15 values in excess of the proposed 570 limit. CU stated, ''Though the five seats with the lower HIC15 had a notable margin between their values and the 570 limit, it may be an expectation that at the higher beltline height more CRSs would approach or exceed that limit.'' CU added that the higher beltline may also

[146] While there may be no effect of tether use and/or tether anchorage position in a near side impact, use of a tether may improve the repeatability of the test. Also, there may be some effect of tether use in center and far-side impact environments, which would be relevant to researchers conducting center and/or far-side impact testing. Such testing would likely involve changing the SISA and door assembly to resemble a center/far-side environment, and adapting the SISA in such a manner would require substantial changes to the sliding seat (*i.e.* making it wider to represent the center and/or the far-seating positions in a rear seat) and/or to the door assembly to position the door intrusion at an appropriate distance for a center/far-side impact environment. Entities engaged in such modifications can also consider changing the location of the tether as part of their evaluation.

[147] 85 FR 69388, *supra.*

[148] The 2012 Vehicle Rear Seat Study measured the vehicles' seat geometry and anchorage locations using a seat geometry measuring fixture (SGMF). The SGMF consisted of two wood blocks (600 mm x 88 mm x 38 mm) and a 76 mm (3 inches) hinge. To make the rear seat geometry measurements, the SGMF was positioned on the centerline of each rear seat position. Point A, which corresponds to the hinge location of the SGMF, was the reference point for all measurements.

produce a larger differential when compared to the performance of seats in the sled/vehicle test comparison.

Agency Response

Contrary to CU's understanding, our fleet testing of forward-facing CRSs discussed in the NPRM [149] were performed at the higher beltline height (500 mm or 19.6 inches), not the lower beltline height (479 mm or 18.8 inches) that was first used during development. Tested against the 500 mm beltline height, the fleet test results of forward-facing CRSs with the Q3s dummy showed that 7 out of 12 CRSs exceeded HIC15 injury limits and that 3 out 12 tests resulted in chest deflection exceeding the proposed limit (23 mm). Fleet tests of rear-facing CRSs tested with the Q3s showed that 3 out of 5 exceeded HIC15 injury limits and 2 out of 5 exceed chest deflection injury limits. For the 5 rear-facing CRSs tested, the results of the fleet tests showed that the Q3s measured HIC15 greater than 570 in 3 of the 5 rear-facing CRSs tested, and chest deflection greater than 23 mm in 2 of the 5 tests. The Q3s measured both HIC15 greater than 570 and chest deflection greater than 23 mm in 1 of the 5 rear-facing CRSs tested.

Tests with the 12-month-old CRABI dummy in rear-facing CRSs showed that the different beltline heights did not affect dummy responses. NHTSA believes this was due to the fact that most rear-facing CRSs designed for smaller children position the head lower (mostly below the beltline) and therefore the increased height (at 500 mm or 19.6 inches) did not affect the outcome. For this reason, fleet testing with the 12-month-old CRABI dummy in rear-facing CRSs did include tests done at 500 mm and at 479 mm. Results of rear-facing CRSs using the 12-month-old CRABI dummy showed that only 1 out of 12 models had head to door contact. NHTSA believes the tests selected for the fleet testing and cost benefit analysis in the NPRM were appropriate and accounted for the increased stringency of the higher beltline. Accordingly, NHTSA is not making any changes to the SISA beltline height from that proposed in the NPRM.

ii. Door and Armrest Thickness and Stiffness

NHTSA proposed that the door panel/armrest configuration for the SISA would consist of 51 mm (2 inches) ''average'' stiffness foam padding (Dow Ethafoam 220) on the door and a 64 mm (2.5 inches) ''stiff'' foam (United Foam #4) for the armrest. NHTSA determined that this door panel/armrest configuration had similar characteristics to those observed in Free Motion Headform (FMH) impact testing of eight vehicle doors. Those tests are described in detail in NHTSA's 2013 report, Child Restraint Side Impact Test Procedure Development.[150] The proposed armrest thickness also fell within the range of vehicle armrests measured in the 2012 Vehicle Rear Seat Study.

In addition to the representativeness of that door panel/armrest configuration of average rear seat characteristics, NHTSA stated that the proposed door padding (Ethafoam 220) was of lower cost compared to the other foams, was relatively easy to obtain commercially, and was relatively fungible, in that other materials with similar physical properties could easily be used in its place. NHTSA also cited to results of its sensitivity analyses that showed door stiffness had little effect on dummy performance.[151]

Discussion of Comments

CU commented that the FMVSS No. 201 test procedure that NHTSA used as a basis for determining average door and armrest stiffness was also utilized by CU in its revised CRS testing protocol, and therefore CU supported that aspect of the NPRM. ARCCA commented that while it did not have data to confirm or deny the appropriateness of the door/armrest configuration, it was unaware of any rear door configuration with the level of padding specified for the proposed SISA. ARCCA stated that, accordingly, the HIC values acquired from head to door impact would likely underpredict the severity of the head impact.

NHTSA disagrees with ARCCA. The stiffness of the simulated door in the SISA is representative of the stiffness found in vehicles, which NHTSA determined using the FMH testing described above. The stiffness of the 51 mm thick door padding includes the combined stiffness of the door assembly (inner and outer panel of the door) and the interior door padding. The relevant factor for the test is door stiffness and not the thickness of the door padding. Details of the development of the door characteristics can be found in the ''Child Restraint Side Impact Test Procedure Development'' technical report.[152]

Both JPMA and MGA noted a discrepancy between the NPRM specification for door foam thickness (51 mm) and the drawing package specifications (55 mm). JPMA stated that this difference in foam thickness is significant because ''the NPRM includes set-up distances from the face of the door panel to the face of honeycomb material and from the face of the honeycomb material to the centerline of the sliding seat [sic].'' JPMA explained that the thickness of the foam is thus an important part of these set-up relationships and needs to be the same in the final rule and the drawing package to help ensure consistent test results between test facilities. MGA stated that it believed the error was on the part of the drawings, as 55 mm (2.2 inches) foam is not commonly available.

NHTSA agrees with MGA that there are inconsistencies in the door foam thickness specification between the NPRM and the drawing package. The door foam was procured as a 2-inch nominal thickness foam plank. According to the foam manufacturer's terminology,[153] an X-inch nominal foam thickness means that the foam plank is gauged at a desired thickness of X + ¼ inches. Therefore, a 2-inch nominal thickness foam plank has a thickness of 57 mm (2.25 inches). Accordingly, NHTSA has changed the door foam thickness measurements in Drawing 2921–501 from 55 mm (2.2 inches) to 57 mm (2.25 inches). The specified foam, with a thickness of 57 mm (corresponding to a 2-inch nominal foam thickness) is commonly available. Graco made several recommendations relating to the door foam's characteristics over time and extended use. The commenter recommended replacement of the door foam only after significant structural damage. It recommended that NHTSA provide a standardized method for measuring the compression properties of the door foam. Graco provided developmental test results showing that maximum HIC15 and chest deflection results occur at the time of contact with the door structure.[154] Graco suggested that NHTSA should confirm that performance after extended use does not change results. Graco explained that currently the foam types are described as ''Soft'' (United Foam # 2), ''average'' (Dow Ethafoam 220), and ''stiff'' (United Foam # 4) foam. Graco suggested that, if these descriptions can also include a method for confirming compression

[149] *Id.* at 4593.

[150] Sullivan, L., Louden, A., Echemendia, C., ''Child Restraint Side Impact Test Procedure Development'' (December 2013), available at Docket No. NHTSA–2014–0012–0002 [hereinafter Sullivan et al. (2013)].

[151] Sullivan et al. (2011).

[152] Sullivan et al. (2013).

[153] Link to foam manufacturer's terminology: *https://www.customfoaminc.com/CustomFoamProductsSpecSheet.pdf.*

[154] NHTSA–2014–0012–0042, at pg. 9.

properties after extended use, crash test facilities can confirm that injury metric results are not affected by changes in foam properties.

MGA reported that they did not replace the door and armrest foam between tests (approximately 40 tests). MGA used a single piece for the door and two pieces for the armrest attached with spray adhesive. MGA reported that the foam assembly did not show any physical degradation nor change in thickness during their test series.

During NHTSA's research testing, the door foam was reused for 2 to 3 tests as no extensive damage was seen during initial tests, while the armrest foams were used only once as they presented indentations from the impact of a single test. Since there is no method to retest for the compression properties of the door and armrest foams after use, NHTSA frequently replaces these foams.[155] How frequently NHTSA will replace these foams in its compliance testing program will be indicated in NHTSA's compliance test procedure for FMVSS No. 213a that will be included on NHTSA's website.[156]

3. Honeycomb

As discussed above, the purpose of honeycomb on the door structure is to contact the sliding seat in a way that the desired sliding seat acceleration is achieved. NHTSA included honeycomb specifications in the parts list drawings docketed with the NPRM. The drawing specified Aluminum—6061 (AL 6061) as the material used, the honeycomb cell size, foil gage, and density, and noted that an equivalent density could be used. The drawings also specified the dimensions of the honeycomb used in the test sled.

JPMA was concerned that the costs of running the proposed side impact test would be higher than running an FMVSS No. 213 frontal impact test because the honeycomb material could only be obtained from one supplier and that the limited availability drove up demand and price. JPMA added that the honeycomb material could only be used once and then must be discarded. JPMA recommended NHTSA specify the type of material that could be used and the amount of pre-crush that should be done to allow for technological advances in this area without restricting potential suppliers.

JPMA also commented that testing by its members using honeycomb material with and without pre-crush confirmed that the performance of the honeycomb varied. JPMA added that the pre-crushed material produced lower peak Gs and a lengthened, smoother deceleration pulse. JPMA believed that even if the final rule specified pre-crushed honeycomb, it also must include parameters for controlling the amount of crush to be obtained and whether the pre-crushed surface of the honeycomb material should face the sliding seat.

Agency Response

As discussed above, for the final rule's test procedure, NHTSA made changes to the sliding seat structure to reduce vibrations that were affecting accelerometer readings and to align the seat specifications with that of the proposed FMVSS No. 213 frontal impact test.[157] These modifications added weight to the sliding seat structure, and the added weight of the seat made the sliding seat acceleration pulse fall to the lower bound of the proposed acceleration corridor of the sliding seat assembly. Therefore, the specifications for the honeycomb needed revisions to obtain the average acceleration pulse in the sled tests presented in the NPRM.

The agency worked with Plascore, the manufacturer of the honeycomb used in the proposed SISA, to select a honeycomb for testing purposes that would modify the sliding seat response and bring the acceleration pulse within the proposed corridor. NHTSA also worked to develop appropriate specifications for the selected honeycomb material. The final honeycomb specifications differ in cell size and crush strength from the proposed specifications. The final honeycomb specifications are detailed in a report entitled, ''FMVSS No. 213 Side Impact Test Evaluation and Revision,'' [158] in addition to the drawing package accompanying this final rule.

In response to JPMA's concerns that the honeycomb could only be obtained from one supplier, while the agency did not test with honeycomb from different sources, the agency notes that Cellbond is another manufacturer that can provide similar honeycomb material. In addition, if manufacturers are concerned about the cost of replacing the honeycomb, they can develop their own decelerating system (*e.g.* a hydraulic decelerator) that provides a sliding seat acceleration profile within the required acceleration corridor. The honeycomb specification is provided to advise manufacturers how NHTSA's compliance tests will be performed, but manufacturers are not required to use the procedures. NHTSA also notes that the size and crush strength of the honeycomb can help tune the system to achieve the desired accelerations within the corridor.[159]

The agency also tested some pre-crushed honeycomb but found, as JPMA had noted in its comments regarding members' testing, that the acceleration pulse peak was reduced and the length of the pulse extended outside the proposed acceleration corridor.[160] As NHTSA found that it was possible to obtain an acceleration pulse of the sliding seat that was within the specified corridors using honeycomb that was not pre-crushed, NHTSA did not further consider the use of the pre-crushed honeycomb. However, as discussed above, the standard adopted by this final rule does not prohibit the use of pre-crushed honeycomb. Test facilities and manufacturers may choose any type of honeycomb as long as the sliding seat acceleration pulse is within the specified corridors. They may even use an entirely different apparatus (*e.g.,* a hydraulic decelerator, which does not require honeycomb) as long as their child restraints meet FMVSS No. 213a when tested by NHTSA in the manner specified in the standard.

4. SISA Technical Drawings

The NPRM proposed to incorporate by reference a set of technical drawings of the SISA into FMVSS No. 213a. The technical drawings were placed in the docket. Several commenters provided feedback on the drawings, pointing out errors such as minor discrepancies between the drawing and the proposed regulatory text, places where clarity was requested, and suggestions for additional drawings or parts specifications for the SISA. NHTSA has provided additional explanation in the discussion below, and in some cases, has made minor corrections or revisions to the drawings to correct or clarify the material. These changes simply improved the quality of the drawings and will have no effect on the outcomes of the test.

[155] The research test procedure developed at VRTC specifies use of a new foam for each test. This test procedure is in the following report in the docket of this final rule: Louden, A., & Wietholter, K. (March 2022). *FMVSS No. 213 side impact test evaluation and revision* (Report No. DOT HS 812 791). Washington, DC: National Highway Traffic Safety Administration (hereinafter Louden & Wietholter (20)).

[156] The NHTSA Office of Vehicle Safety Compliance FMVSS No. 213a side impact test procedure can be found at: *https://www.nhtsa.gov/vehicle-manufacturers/test-procedures.*

[157] 85 FR 69388, *supra.*

[158] Louden & Wietholter (2022).

[159] *See* Louden & Wietholter (2022). *See also* Brelin-Fornari, J., ''Final Report on CRS Side Impact Study of Repeatability and Reproducibility using a Deceleration Sled,'' July 2017.

[160] Louden & Wietholter (2022).

Corrections and Revisions to the Technical Drawings

MGA suggested that the agency incorporate drawings or reference geometry for a D-ring and Type 2 (3 point) seat belt anchors. MGA stated that currently different test facilities use different methods for locating and attaching belt anchors, which the commenter believes has been a source of concern with FMVSS No. 213. MGA stated that ECE R. 44 Annex 13, p. 149–151 (dated February 2008), specifies geometry and may be helpful as a reference as the proposed SISA has similar geometry to the ECE R44 seat assembly. In response, NHTSA has included drawings for the D-ring and Type 2 belt anchors in the final drawing package.

MGA suggested removing the CRAS lower anchorages and belt anchor assembly from inside the bottom cushion to allow a complete bottom cushion with no cutouts. MGA stated that this would provide the ability to have a more consistent and representative seating surface. In response, as discussed above, the final foam design does not have cutouts, and the anchorages location and design have been updated to be more accessible and durable. The specific change MGA suggested has not been made.

MGA commented that although load legs are not currently recognized in FMVSS No. 213, some sort of platform in a specified location on the SISA may help aid their introduction into FMVSS No. 213 in the future. Relatedly, CU commented that during its evaluation of infant seat models equipped with load legs, there was some interaction between the load leg and the mounting hardware on the sled ''floor'' as well as front camera hardware. CU suggested that elimination of hardware or test components in the area directly ahead of the test bench may be warranted in updates or final rule changes to limit possible interaction with the load leg of rear-facing seats.

In response, load legs cannot be used in the side impact configuration as the sliding seat is on rails connected to the base plate/floor. The floor does not move during the test as the seat assembly slides along the rails. Further, NHTSA will not use load legs in the FMVSS No. 213a compliance test. Under FMVSS No. 213a, a top tether will be attached (in forward-facing CRSs that provide one), but supplementary devices will not be used.[161] If manufacturers want this option for testing CRSs for purposes other than compliance testing, they can design a SISA with a floor that can be used for supporting load legs. MGA suggested that NHTSA define the overall length of the equipment (base plate, rails, rail mounting plate) as a reference dimension. MGA stated that depending on the sled system, equipment, and input used, more or less ramp up room may be required to perform the test. MGA also stated that allowing additional length would provide the opportunity to test to more severe inputs. NHTSA declines to make this change. If manufacturers want to test at different settings, they can vary the rail length as convenient in their system.[162]

Regarding the bench seat panel assembly, MGA commented that the attachment method for holding the ''Bench Seat Panel'' and ''Bench Seat Back Panel'' (Drawings 2921–360 and 2921–380) to the ''Bench Seat Assembly'' (Drawing 2921–310) were not durable enough. MGA said that the attachment bolts thread into thin steel and stripped out very quickly, and that MGA accordingly replaced most of these fasteners with thru-bolts. MGA suggested thicker wall tubing, a captured nut, or other means for attaching to the bench (seat assembly). Updates to the seat assembly design make MGA's suggestions to drawings 2921–360 and 2921–380 moot as drawings 2921–360 and 2921–380 drawings were removed. Also, the seat back and seat pan design were changed in the updated 2921–310 drawings, making MGA suggestions no longer relevant.

Regarding the tether anchor mount, MGA commented that Drawing 2921–340, ''Top Tether Anchor,'' has a single mounting bolt to attach the mount to the seat frame, which allows the tether anchor to rotate during testing. MGA suggested that it may be desirable to mount the tether anchor with a second bolt to prevent this pivot motion. NHTSA agrees and has modified the tether anchor design to prevent rotation and so it can be replaceable in case of bending during testing. The new tether anchor design consists of an easily replaceable bolt that goes through two small wings attached to the seat assembly, with two bolts to prevent rotation. The replaceable bolt serves as the tether anchor in the new design.

Regarding Drawings 2921–370 and 2921–390 ''Bottom Seat Cushion Ass'y'' and ''Seat Back Cushion Ass'y,'' MGA stated these drawings are inconsistent on the width of the seating surface. The bottom cushion specifies a width of 695 mm (27.4 inches) while the back cushion specifies a width of 670 mm (26.4 inches). In response, NHTSA updated drawings 2921–370 ''Seat Pan Cushion Ass'y'' and 2921–390 ''Seat Back Cushion Ass'y'' and they are now the same dimensions 711 mm (28 inches) width.

Regarding Drawing 2921–321 ''Bench Top Anchor Brace Plate,'' MGA commented that it believed this drawing is obsolete. NHTSA agrees and the brace plate has been eliminated from the drawings.

Regarding Drawing 2921–100 ''Base Plate,'' MGA had four suggestions. First, change the M10 tapped holes for rail base plate mounting to M12. The through holes in rail mount plate (Drawing 2921–251) and end stop ''Bumper Base'' and ''Bumper Base Extension'' (Drawings 2921–411 and 2921–412) are 0.531 inches and 0.500 inches which are too big for an M10 bolt.

Second, allow the option to use aluminum to reduce the weight of the setup. Third, remove thru holes for attaching to the VRTC sled; and fourth, make the overall rail length for reference only to allow changes for different sled facilities. In response, NHTSA switched the holes to M12; allowed the option to use aluminum to reduce the weight of the setup; and removed all extra thru holes. In regards to the last suggestion, the drawing package contains drawings for an acceleration-type sled test. If manufacturers want to test at different settings or use different types of sled systems, they can vary the rail length as needed. The Kettering study [163] of a deceleration-type sled used longer rails than the drawings as the deceleration sled needs a longer distance to ramp up to the desired speed.

MGA stated Assembly 2921–210 ''Impactor Stop Assembly,'' can be changed from referencing two bolt together weldments to a single weldment by changing (1) Assembly 2921–220 ''Impactor Stop Frame

[161] This is consistent with the requirements of FMVSS No. 213. Load legs are not permitted to meet the minimum threshold requirements of FMVSS Nos. 213 and 213a because the agency is concerned that caregivers will not use the load leg. Manufacturers may provide a load leg to supplement performance beyond the threshold needed to meet the FMVSSs, but the CRS must meet the requirements of the FMVSSs without use of the load leg.

[162] As discussed below, NHTSA's drawing package contains drawings that are appropriate for an acceleration-type test. NHTSA did test on a deceleration-type sled in the Kettering study that used longer rails, because the deceleration-type sled needs a longer distance to ramp up to the desired speed.

[163] Brelin-Fornarni, J., ''Development of NHTSA's Side Impact Test Procedure for Child Restraint Systems Using a Deceleration Sled: Final Report, Part 1. April 2014. Link: *https://www.nhtsa.gov/sites/nhtsa.dot.gov/files/811994-sideimpcttest-chrestraintdecelsled_pt1.pdf*.

Assembly'' to remove holes in the plate for Drawing 2921–221 and eliminating items 2921–224, 2921–225, 2921–226; and (2) Assembly 2921–230, ''Honeycomb Frame Assembly,'' by eliminating item 2921–231, extending item 2921–232 by 0.25 inches and extending item 2921–235 by 6 inches. In response, NHTSA removed the holes in plate for part 2921–221. Drawings 2921–(225–226) were removed. Drawing 2921–224 was not removed as it is referenced in the drawing package. Item 2921–231 was removed. The dimension was increased by 0.28 inches (rather than 0.25 inches as suggested) to correctly depict the length in drawing 2921–232 (from 136.5 mm or 5.38 inches to 143.7 mm or 5.66 inches). The dimension was extended in drawing 2921–235 by 6 inches, as suggested.

Regarding Drawing 2921–241–1 ''Impactor Frame Tube 1,'' MGA suggesting changing the length of the frame tube from 30.80 inches to 29.50 inches to match the height of the impactor frame and to match part 2921–241–2. In response, NHTSA changed the length of the impactor frame tubes, to depict the correct length of 29.50 inches, as suggested. Drawing 2921–241–1 has been removed and replaced by –241–2.

Regarding Drawing 2921–251 ''Rail Mtg. Plate,'' MGA suggesting changing the width from 5.91 inches to 6 inches, as a 6-inch plate is commonly available, and the change reduces machining processes. In response, NHTSA changed the width of the plate to 6 inches.

Regarding Assembly 2921–311–9 ''Bench Frame Tube #9 Assy.,'' MGA suggested removing notches and extra pieces as these were believed to be obsolete. NHTSA has removed Assembly 2921–311–9, so this suggestion is no longer applicable.

Regarding Drawing 2921–313 ''Bench Bearing Support Plate,'' MGA had three suggestions: change overall length from 24.41 inches to 24.56 inches, as the current length does not fit the size of the SISA; change the width from 4.016 inches to 4.00 inches, as four-inch plates are readily available; and change slots to holes, if the purpose of slots is unnecessary. NHTSA agrees and has made these suggested changes.

Regarding Drawing 2921–314 ''Bench Frame Center Stiffener Plate,'' MGA commented that this plate appeared to be obsolete, and recommended removal of the drawing. NHTSA did not remove the plate from the drawing package, because the plate is still in use. The stiffener plate helps overall buck durability.

Regarding Drawing 2921–322 ''Bench Stop Plate,'' MGA suggested changing the plate with from 5.91 inches to 6 inches, as six-inch plates are readily available. MGA also questioned the purpose of holes in the plate, and requested the agency remove the holes if they were obsolete. In response, NHTSA changed the dimension of the plate in the drawing as suggested. The holes in the plate are necessary, as holes need to be present for the honeycomb to provide the correct response (air flow through the honeycomb) for correct deceleration.

Regarding Drawing 2921–331 ''Light Trap Vane,'' MGA suggested removing the drawing from the package, as depending on the model of light trap used to measure velocity, different sized vanes or flags may be necessary. NHTSA agrees, and the drawing has been removed.

Regarding Drawings 2921–372 ''Seat Bottom Cushion'' and 2921–392 ''Seat Back Cushion,'' MGA had three comments: first, MGA noted that the cutouts to allow clearance for the belt anchors were not the same size for the left and right side, and asked if this was intentional (as drawings 2921–371–1 ''Seat Bottom Cushion Mtg. Plate'' and 2921–360 ''Bench Seat Panel'' have the same size cutouts for the left and right side). Next, MGA stated the location of the cutouts does not match the location on Drawing 2921–371–1 ''Seat Bottom Cushion Mtg. Plate'' and the misalignment can be seen in assembly 2921–370 ''Seat Bottom Cushion Assy.'' Finally, MGA stated that the specified material has proven difficult, if not impossible to obtain. MGA suggested NHTSA specify a more commonly available polyurethane foam block with a specified density and force/deflection. In response, as discussed above, NHTSA modified the SISA so that the final foam design does not have cutouts. In addition, as discussed above, NHTSA has identified several manufacturers that could produce the specified foam. This is discussed in more detail in the Foam Feasibility Study included in the docket with this final rule.[164]

Regarding Drawings 2921–373 ''Bottom Seat Cushion Cover'' and 2921–393 ''Seat Back Cushion Cover,'' MGA suggested NHTSA specify a more commonly available material such as ''cotton duck,'' which can be purchased from a variety of vendors. MGA also suggested NHTSA specify a detailed method of wrapping and attaching the cover material. In response, NHTSA added details for the cover material to the drawing package. The current wrapping method is specified in the report, ''FMVSS No. 213 Side Impact Test Evaluation and Revision'' [165] and will be available in the compliance test procedure (TP) placed on NHTSA's website.

Regarding Drawing 2921–391–1 ''Seat Back Cushion Mtg. Plate,'' MGA suggested reducing the thru hole size from 0.328 inches to 0.281 inches for specified 1/4–28 hardware. In response, NHTSA found the suggested 0.281 inch through hole was too small to slide down the bolts and lay flush with the seat back pan. Accordingly, the dimension was changed to 0.34 inch, which corresponds to a 11/32 standard bit size.

Regarding Drawing 2921–396 ''Rail Bearing Mount Plate,'' MGA suggested changing the overall length from 30.98 inches to 31 inches as it currently does not match Drawing 2921–397, ''Anti-Rebound Slider Base,'' which attaches to it. MGA also suggested changing the thickness from 0.35 inch to 0.375 inch (3/8 inch), as a 3/8 inch plate is referenced as the material, and reducing the thickness to 0.35 inch through a machining process is very time consuming and costly. In response, NHTSA changed the overall length dimension to 31 inches as suggested, and the thickness was updated to 3/8 inch in the drawing package.

Regarding Drawing 2921–404, ''Anti-Rebound Fixture Stop Plate,'' MGA stated that, currently, the plate has a taper and is not a constant thickness, and questioned whether this was intentional or a drawing error. MGA stated that if this is an error, it should be corrected to a constant 0.75 inch thickness. MGA also stated that the Countersink is currently drawn for 1/2 inch hardware, but 5/8 inch hardware is specified in drawing 2921–400, ''Anti-Rebound Fixture Ass'y.'' In response, NHTSA changed the hanged plate thickness to a constant 0.75 inch, as suggested. The drawings were also changed to have a 5/8 inch countersink.

Regarding Drawing 2921–411 ''Bumper Base,'' MGA stated that the thru holes for attaching to the base plate are not dimensioned in the drawings, and should be to make the drawing fully defined. In response, NHTSA added dimensions so that the drawing is fully defined.

Regarding Drawing 2921–501 ''Impactor Door Foam,'' MGA had three comments: first, the thickness is drawn to 2.2 inches but in the proposed regulatory text a thickness of 2 inches is referenced; second, the drawing is not fully constrained, as the two angles are

[164] ''Foam Feasibility Study by National Center for Manufacturing Sciences'' (NHTSA, June 2018). This document is in the docket for this final rule.

[165] Louden & Wietholter (2022).

not dimensioned; and third, that the geometry does not match the geometry of Drawing 2921–243, ''Impactor Door Plate,'' to which this piece attaches. In response, NHTSA changed the thickness of the door foam to 2N (Nominal) and dimensions were added to be fully constrained. NHTSA also changed the drawing so that the geometries of the door plate and door foam match.

Regarding Drawing 2921–600 ''Honeycomb,'' MGA suggested removing the overall dimensions from the drawing and making it for reference only. MGA stated that different pieces of equipment may behave differently and need to be tuned through the sizing of the honeycomb material. MGA also suggested that NHTSA specify if the honeycomb is to be ''pre-crushed'' as is common with testing involving aluminum honeycomb. In response, NHTSA did not make any changes to the drawing, as honeycomb is in the optional section of the drawings so that test facilities can use the honeycomb material and cut it to different sizes if necessary. NHTSA did not indicate pre-crush, as discussed above.

Regarding Assembly 2921–700 ''Light Trap Assembly,'' MGA suggested removing drawings 2921–700, 2921–701, 2921–702. MGA stated that depending on the model of the light trap being used to record velocity, different sized and shaped attachments may be necessary. In response, NHTSA removed Drawings 2921–(700–702). The test procedure will not be using a light trap to determine closing speed, and therefore the drawings are not needed.

5. Other Testing Issues

i. Right-Side Impacts

MGA also commented that there is no ability to perform FMVSS No. 213a testing on the right side of the CRS. MGA stated that wording in the proposed rule dictates the need to perform left- and right-side impacts but the SISA drawing package is not reversible and cannot be used for right-side impacts. MGA recognized modifying the equipment would require significant redesign.

MGA is correct that the SISA can only test left-side impacts. A SISA that would allow both impact directions would have to be designed, and such redesign would likely affect the overall weight of the sliding seat, and, therefore, the specifications for the rest of the settings (*i.e.,* honeycomb, input acceleration and velocity). Another option would be to specify a mirror-image SISA to test in a right-side impact configuration, but developing such a sled assembly would also take time and resources and involve doubled testing costs. NHTSA has decided that both approaches are unnecessary at this juncture. While the standard only specifies a test simulating a left-side impact, as a practical matter it is reasonable to conclude that manufacturers will apply to the right side the same countermeasures that protect against left side impacts. Because of market forces (consumers will likely prefer CRSs that provide both left- and right-side protection over ones that provide only left-side protection), manufacturer diligence, liability concerns and the practicability of countermeasure design, NHTSA believes manufacturers will be motivated to apply the countermeasures developed for the left side to both sides of the CRS. The agency also plans to query CRS manufacturers to see if they have designed their CRSs so that the child restraints perform equally in a right-side impact as they do in the left-side test to keep informed of industry practices in this area.

ii. Sliding Seat Bearings

JPMA commented that several smaller JPMA members were concerned with the cost of the sliding seat bearings for the FMVSS No. 213a test set-up. JPMA explained that based on observations during side impact testing, such bearings will only last 30 to 40 runs per set and cost $750 to replace. JPMA added that the bearings wear quickly in the proposed side impact test due to lateral load imposed by the difference in the travel angle of the sled and the sliding seat and the lateral and vertical loads during the impact. JPMA explained that as the bearings wear down, they create drag, which will eventually cause the sliding seat pulse to exceed specifications. JPMA added that during the wearing process, additional burden on the already impaired bearings causes them to wear out even faster, and thereby necessitating frequent replacement.

JPMA suggested that one possible solution would be to adjust the drawing package, which specifies that flange bearings be used. JPMA stated its belief that the deletion of that requirement would allow each test facility and/or manufacturer the opportunity to determine what type of bearings work best with their test fixtures.

NHTSA concurs with the suggestion. The drawings are modified to specify the bearings as ''THK Linear Motion Guide Model HSR30–B–2–UU–M+1315–M–II or equivalent'' to allow compliance test facilities to use different brand of bearings. VRTC measured the drag pull/push force during testing to evaluate whether the bearings were causing excessive friction as they were wearing down (excessive friction is an indication that they may need replacement.).[166] The data indicated that the drag force did not increase appreciably as the bearings were wearing down, and VRTC only replaced the bearings if, after higher than normal push/pull forces were observed, the push/pull forces did not decrease after greasing the bearings, or after additional troubleshooting. Per this methodology, VRTC replaced the bearings after approximately every 80 tests. NHTSA believes replacing the bearings every 80 to 100 tests is not an unreasonable cost burden. Further, NHTSA estimates the cost of a bearing set is $440 ($110 each), which is less than what JPMA estimated.

iii. Seat Belt Interference

Graco commented that, during the time of engagement between the aluminum honeycomb and the impact surface of the sliding seat, the Type 2 shoulder belt is engaged with the door structure, which can result in a different acceleration pulse.

As discussed further in the section on Repeatability and Reproducibility below, NHTSA's testing with the CRS installed using the Type 2 (lap/shoulder belt) showed no interference of the shoulder portion of the Type 2 belt with the door.[167] In testing, the shoulder portion of the Type 2 belt slides behind the door during contact of the sliding seat with the door. This interaction did not affect the sliding seat acceleration pulse or any of the performance measures.

c. Sled Kinematic Parameters

1. General

In designing FMVSS No. 213a, NHTSA examined data from FMVSS No. 214 MDB compliance tests to identify kinematic characteristics of a side impact crash, so that the sled test would be representative of the crash experience of a child restrained in a CRS in the rear seat. NHTSA identified the following sled kinematic parameters to replicate in the FMVSS No. 213a test: (1) the acceleration profile of the sliding seat (representing the struck vehicle acceleration); (2) the door velocity at time of contact with the sliding seat (this represents the struck vehicle door

[166] *See* Louden & Wietholter (2022) for documentation on drag pull/push force which may predict if bearings have high friction. The increase in pull/push force may also be attributed to other causes explained in the report.

[167] Figures illustrating the Type 2 seat belt testing showing no interference with the door are docketed with this final rule.

velocity); and (3) the impact angle of the door with the sliding seat (to replicate the longitudinal component of the direction of force).

NHTSA determined that a small passenger vehicle in an FMVSS No. 214 MDB crash test experiences a lateral change in velocity of about 30 km/h (18.6 mph). This change in velocity is greater than 92 percent of near-side impact real-world crashes involving restrained children 0- to 12-years-old in light vehicles, as estimated by NHTSA using data files from the National Automotive Sampling System Crashworthiness Data System (NASS–CDS) (now known as the Crash Investigation Sampling System). To ensure that the side impact test would be sufficiently stringent to account for the greater acceleration and intrusion experienced by smaller vehicles, the agency focused on the crash characteristics of small passenger vehicles in FMVSS No. 214 side MDB tests, as opposed to the average estimates from all vehicles.

As discussed further below, NHTSA proposed a test procedure that specified the following parameters:

- A trapezoidal sliding seat acceleration profile (representing the struck vehicle acceleration) based on an analysis of ten small vehicle FMVSS No. 214 tests.
- A sled buck impact angle of 10 degrees. NHTSA selected this impact angle based on two factors: (1) the same small vehicle FMVSS No. 214 MDB tests; and (2) a series of tests within a range of 0 to 20 degrees (at 0, 10, 15, and 20 degrees) to evaluate the effect of the test buck's impact angle on dummy kinematics and injury responses. Separate tests conducted to compare the Takata-based test to four MDB crash tests also found that a 10-degree impact angle on the sled test produced dummy responses closer to those measured by the ATD in the same CRS in the four MDB crash tests than the other impact angles.[168]
- A door velocity (representing the struck vehicle door velocity) of 31 km/h (19.3 mph) prior to the honeycomb contacting the sliding seat structure, based on the FMVSS No. 214 tests of small vehicles with accelerometers installed on the doors (four out of the ten tested vehicles).

NHTSA sought comment on a relative door velocity profile. The agency sought to avoid over-specifying the test environment, but stated that a door velocity profile, with respect to the sliding seat, may be desirable to improve the reproducibility of the interaction of the intruding door with the child restraint in different types of sled systems. Accordingly, NHTSA sought comment on the need for specifying a relative door velocity profile to improve reproducibility of the test procedure. NHTSA stated that, depending on whether the agency received information sufficiently supporting such a velocity profile, one could be included in the final rule.

Comments Received (High View)

There was overarching support for the proposed sled test procedure. Mr. Hauschild agreed that the NHTSA test procedure should account for the struck side door velocity, including the struck vehicle acceleration profile, and the impact angle to replicate a side impact crash. He also stated that testing should be done with and without the intruding door due to the complexities of the side impact crash event. Dorel commented in agreement with the test procedure's intruding door approach, stating that it does not support a test procedure that does not incorporate an intruding door. Dorel concluded that there is no reason to develop, or require a fixed door procedure that has been shown to be unrepresentative of injury mechanisms like intrusion.

As part of its response to NHTSA's request for comment regarding the need to specify a relative velocity profile, Graco requested NHTSA provide data demonstrating that a CRS tested on both a deceleration and acceleration sled would provide the same end results given that the test meets the currently defined constraints. Similarly, Mr. Hauschild commented that the vehicle pulse must be incorporated into both an acceleration and deceleration sled test procedure, as it will influence the ATD kinematics.

ARCCA recommended that side impact testing of the CRS also be conducted at a severity level comparable to side-NCAP vehicle crash testing. ARRCA stated its belief that the higher severity testing would be consistent with crash severity levels currently used to ensure that adult occupants are optimally protected.

Agency Response

The final test's procedure specifications are in large part the same as that proposed in the NPRM, with some refinements. In response to the questions posed by NHTSA in the NPRM, and as discussed in more detail below, many commenters supported including a relative door velocity profile in the final test procedure. NHTSA concurs and has included the profile into the final test procedure. As discussed further in a section below, NHTSA's testing at Kettering University after issuance of the NPRM using a deceleration-type sled showed good coefficient of variation (CV) values. The reproducible results from VRTC and Kettering confirm that the side impact test can be performed in the different sled systems and produce the same results.

NHTSA disagrees with ARCCA's comment that CRS side impact testing be conducted at a severity level comparable to side-NCAP vehicle crash testing. The FMVSS No. 214 MBD impact test speed of 53.9 km/h (33.4 mph) accounts for approximately 92 percent of near-side crashes involving restrained children (0- to 12-years-old children in all restraint environments—seat belts and CRSs). The NCAP side impact MDB test is performed at an impact speed of 61.9 km/h (38.4 mph), which is 8 km/h (4.9 mph) greater than the speed required in FMVSS No. 214.

The side impact performance requirements set by the FMVSS[169] are established at a threshold level of performance that meets the need for motor vehicle safety and that satisfies the other requirements for setting FMVSSs established by the Safety Act. NCAP's side impact performance tests are set at a higher speed to provide comparative information consumers can use to shop for vehicles, and to incentivize vehicle manufacturers to attain higher levels of performance beyond the minimum set by the FMVSS. In order to estimate the effectiveness of CRS padding to mitigate fatalities in side crashes, NHTSA conducted an in-depth investigation of all cases in the NASS/CDS and Special Crash Investigation (SCI) data files for the 8-year period from 2002 to 2009 where a vehicle impacted on its side in a crash had a CRS restrained child occupant who was killed in the crash.[170] Results showed that for near side impacts, most fatalities (14 out of 17) were not survivable due to extensive vehicle damage and intrusion (which indicated increased severity/speed) or gross misuse. The agency determined that additional padding and improved CRS designs would not have prevented the 14 child occupant fatalities. Therefore, NHTSA does not believe that increasing

[168] Sullivan et al. (2009).

[169] Per the National Traffic and Motor Vehicle Safety Act, ''motor vehicle safety standards'' means a minimum standard for motor vehicle performance, or motor vehicle equipment performance, which is practicable, which meets the need for motor vehicle safety and which provides objective criteria.

[170] Preliminary Regulatory Impact Analysis—Side Impact Test for Child Restraints FMVSS No. 213, January 2014. Docket No. NHTSA–2014–0012–0007.

the test speed above the FMVSS No. 214 MDB impact speed will provide additional safety benefits that merit the change. In making regulatory decisions on possible enhancements to CRS performance, NHTSA bears in mind consumer acceptance of cost increases to child seats, a highly effective item of safety equipment. Countermeasures employed to meet requirements beyond those necessary to meet a safety need may result in additional costs that could reduce CRS sales and CRS use. For these reasons, NHTSA declined to raise the test speed of FMVSS No. 213a to match that of side-NCAP tests.[171]

2. Specific Issues

The following sections discuss additional comments received on aspects of the test procedure related to the sled kinematic parameters, including the sliding seat acceleration profile, the door impact velocity and relative velocity and impact time, and the longitudinal crash component, and the agency's response to those comments.

i. Sliding Seat Acceleration Profile

To obtain a target acceleration profile for the sliding seat that represented the motion of a struck vehicle, NHTSA analyzed the right rear sill (the opposite side of impact) lateral (Y-axis) acceleration of ten small vehicles in FMVSS No. 214 tests.[172] The results showed a change in velocity of approximately 26 to 29 km/h (16 to 18 mph). The right rear sill accelerations were averaged to derive a typical struck vehicle acceleration corridor for small-sized vehicles.

Figure 6 shows the upper and lower boundaries of the rear sill accelerations in thick solid black lines while the dotted line represents the average of the accelerations. The solid thin black line in Figure 6 is a representative sliding seat acceleration pulse.

BILLING CODE 4910–59–P

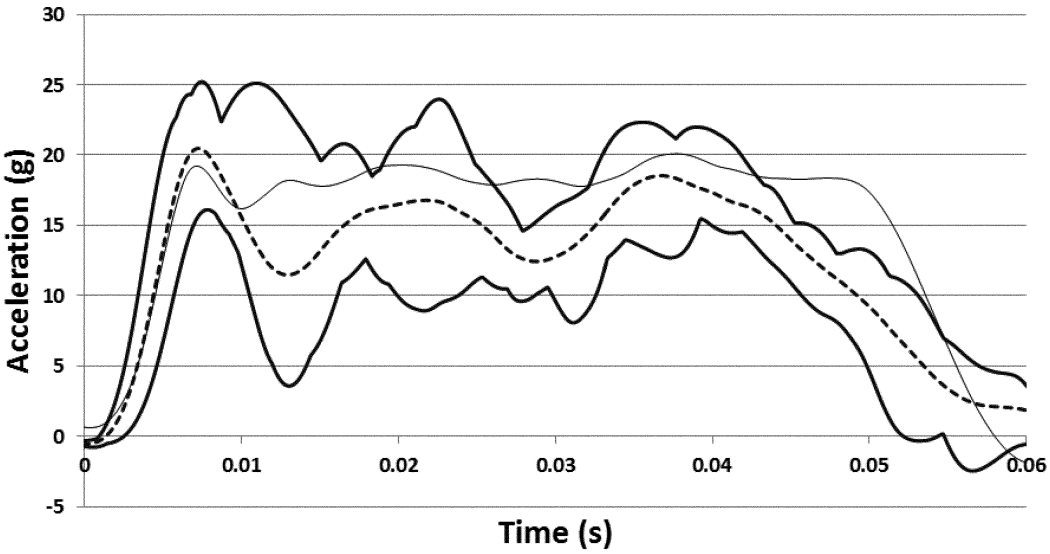

Figure 6 – Average Sliding Seat Acceleration along with Vehicle Lateral Acceleration Corridor

BILLING CODE 4910–59–C

[171] The severity of the FMVSS No. 213a test protocol is greater than the existing side impact test in ECE R.129.

[172] Sullivan et al. (2009).

Accordingly, in the NPRM, NHTSA defined the acceleration corridor for the sliding seat as shown in Figure 7:

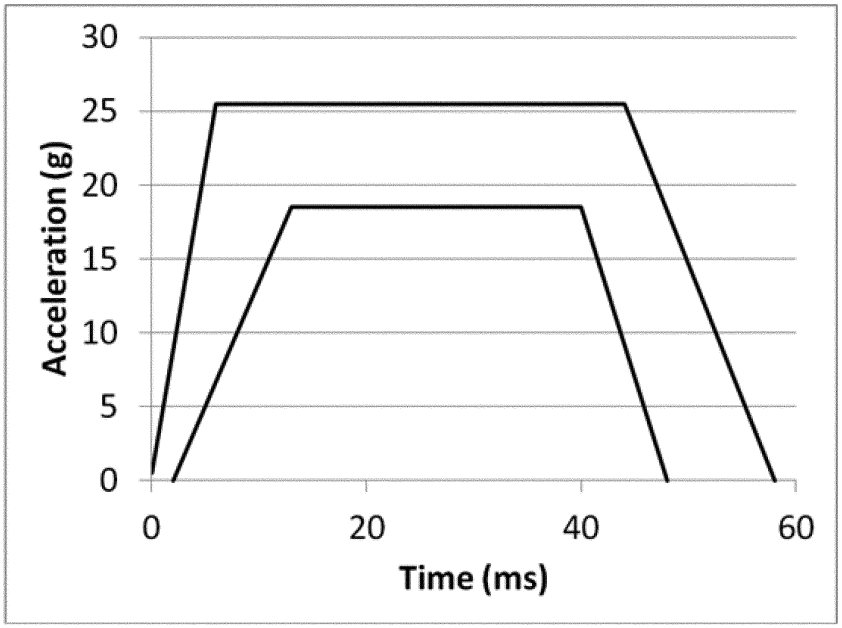

Figure 7 – SISA Bench Seat Acceleration Boundaries (NPRM)

Mr. Hauschild argued that the proposed trapezoidal pulse for the overall crash pulse is not representative of real-world crashes of current smaller and medium-sized vehicles, stating that a side impact event in small- and medium-sized vehicles can be harder to protect against than in larger vehicles. He stated that during the crash event of small- and medium-sized vehicles, typically there is a sharp acceleration in the first 10–15 milliseconds ending with the trapezoidal shape for the remaining 45–50 milliseconds, and that the acceleration pulse shape will influence dummy head excursion and displacement. Mr. Hauschild recommended that NHTSA examine the influence of vehicle pulse shape on dummy kinematics.

NHTSA concurs that smaller vehicles experience a side impact differently than larger vehicles but disagrees that the proposed corridor for the pulse is not representative of the real-world crash of smaller and medium-sized vehicles. NHTSA explained in the NPRM that the proposed acceleration corridor was based on the vehicle accelerations of small passenger vehicles in the FMVSS No. 214 MDB side impact tests and therefore represents the more challenging side crash environment of small vehicles. Comparing the accelerations of the 10 small vehicles, Figure 8 shows that in the initial 10 milliseconds, the proposed corridor allows for a sharp acceleration, as described by Mr. Hauschild. In addition, the proposed FMVSS No. 213a sliding seat acceleration pulse follows that initial sharp acceleration in a similar manner as the vehicle acceleration pulses in these small-vehicle FMVSS No. 214 side impact tests. This is also consistent with the sharp acceleration in the first 10–15 milliseconds, followed by a trapezoidal shape for the remaining 45–50 milliseconds as described by Mr. Hauschild. While the trapezoidal acceleration corridor is necessary to allow for the oscillations that will be present during the side impact test, the corridor must be limited, as a wider corridor that would encompass the lower bound of all vehicle curves could also increase the variability of testing and make reproducibility more difficult. As shown in the figure below, the acceleration corridor is representative of the accelerations experienced in a side impact of a small vehicle. Accordingly, this final rule adopts the acceleration boundaries as proposed.

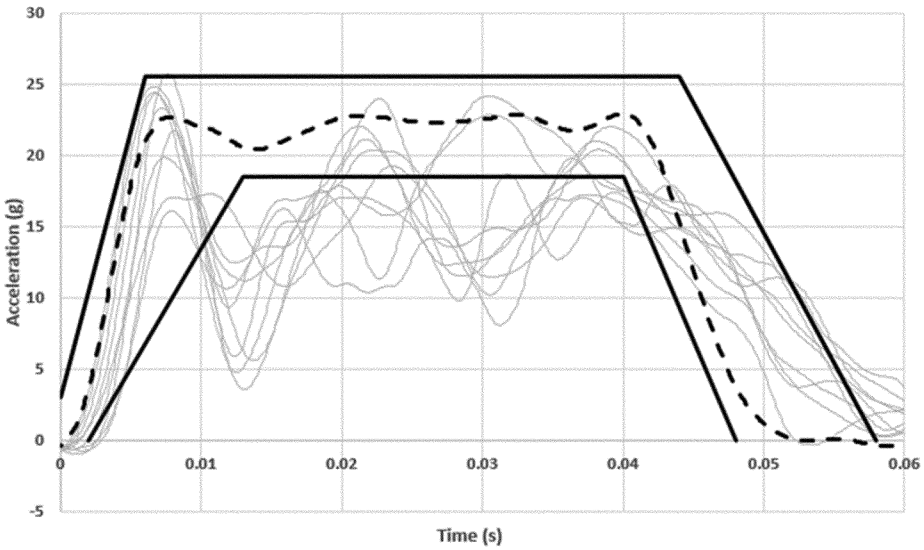

Figure 8. Vehicle right rear sill lateral acceleration (thin grey lines), typical sliding seat acceleration (black dashed) and acceleration corridor (thick black lines).

ii. Tuning the Test To Account for Lighter Dummies

JPMA commented that, when testing CRSs using lighter weight dummies like the 12-month-old CRABI, Calspan (an independent testing facility) has added weight to the sliding seat to maintain the pulse in the corridor specified by the NPRM. JPMA argued that the addition of this weight was not mentioned in the NPRM, and that such a practice could impact results and introduce variation if only some test facilities were doing it. JPMA suggested that NHTSA consider addressing how to maintain a pulse within the corridor when testing with lighter weight dummies like the 12-month-old CRABI.

In response, NHTSA has tested CRSs at two different test facilities: VRTC, using an acceleration-type sled and Kettering University, in a deceleration-type sled. In both test facilities, the variation in weight of the CRS and the dummy has had no significant effect on the pulse. However, when Kettering University tested lower-weight infant carriers with the 12-month-old CRABI dummy, it had to add weight to the sled system (not the sliding seat) because the impact speed increased, making the corridor and impact speed slightly higher than the FMVSS No. 213a test specifications.[173] These sensitivities will have to be tuned at each test facility, as each facility will have to provide the correct input that results in the required velocity and accelerations of the sled buck and the sliding seat. The inputs are not consequential to test outcomes, as long as the required velocities and accelerations are attained for the test. Thus, the agency has decided that no change to FMVSS No. 213a is necessary.

iii. Acceleration Corridor

MGA suggested several modifications to the proposed sliding seat acceleration corridor. First, MGA suggested that the corridor be widened at time T_0 (time when the siding seat first contacts the door assembly), to a 3G maximum. MGA stated that the sliding seat will have some acceleration at time of contact, making it difficult for the acceleration profile to fit into the very narrow acceleration range of the corridor at time T_0. Next, MGA suggested the agency change the slope of the lower boundary of the corridor from time T_0 to time 15 msec after T_0 to match the slope of the upper boundary of the corridor to further widen the corridor. MGA stated that the rise time of the test is dictated by the honeycomb, which has a very sharp rise rate that does not match that of the lower boundary of the corridor. Separately, MGA stated that further specification needs to be provided on the measurement of the sled and sliding seat acceleration and velocities. MGA used points (time versus G level) on the corridor for the acceleration of the sliding seat as an example of such additional data.

Agency Response

Regarding MGA's first suggestion to increase the acceleration upper boundary at time T_0 to 3 Gs, NHTSA's testing at VRTC and testing at Kettering obtained sliding seat accelerations that fell within the proposed acceleration corridor at time T_0. The sliding seat had some movement prior to impact with the honeycomb, however, that movement is minimal and results in negligible acceleration of the sliding seat. Additionally, MGA's comments during the second comment period showed that it was able to meet the proposed sliding seat acceleration corridor at time T_0.[174] Additional test data provided by Graco in support of its comments to the NPRM also indicated that the initial acceleration of its sliding seat was within the proposed sliding seat acceleration corridor. Therefore, data indicate MGA's concern regarding the narrow initial acceleration corridor of the sliding seat is no longer an issue, and so the agency has made no change to the proposed sliding seat acceleration corridor at and near time T_0.

MGA also suggested making the first leg of the lower acceleration corridor wider. NHTSA believes that this also may no longer be an issue, as data provided by MGA and Graco show that the test facilities could meet the sliding seat acceleration corridor. NHTSA

[173] More details on how and when Kettering adjusted its sled system weight can be found in the technical report: Brelin-Fornari, J., ''Final Report on CRS Side Impact Study of Repeatability and Reproducibility using a Deceleration Sled,'' July 2017.

[174] NHTSA–2014–0012–0043, at pg. 2 (Figure 1).

believes it must balance the capability of test facilities to meet the acceleration corridor with maintaining good repeatability of the test. For these reasons, NHTSA is not modifying the lower boundary of the acceleration corridor between time T_0 and 15 msec after T_0, as suggested by MGA. In response to MGA's comment that further clarification needs to be provided on the measurement of the sled and sliding seat acceleration and velocities, the agency has included the sliding seat acceleration corridor coordinates in this final rule's regulatory text.

After consideration of these comments, NHTSA is maintaining the sliding seat acceleration profile proposed in the NPRM for the final test procedure. This acceleration profile appropriately represents the accelerations experienced in a side impact of a small vehicle.

3. Door Parameters

The door velocity (which represents the struck vehicle door velocity) was obtained from the integration of door acceleration data from four of the ten aforementioned FMVSS No. 214 compliance tests (these four vehicles were the only ones tested with accelerometers installed on the door). The accelerometers were installed in the inner structure of the door at the upper centerline and mid centerline door locations. The resulting lateral (Y-axis) peak velocities of the door during interaction with the test dummy ranged from 30 km/h (18.6 mph) at the upper centerline to 32.0 km/h (20 mph) at the mid-centerline. Thus, the target lateral door velocity selected for the test buck was 31 km/h (19.3 mph), the average of the velocities, prior to the honeycomb contacting the sliding seat structure.

NHTSA explained in the NPRM that, since the kinematics of the door prior to the interaction with the sliding seat do not affect the energy and impulse imparted to the sliding seat and child restraint system, the agency believed that the acceleration profile of the impacting door did not need to be specified as long as its velocity during the interaction with the sliding seat and child restraint system is maintained within specified velocity tolerances.

Response to Comments

Dorel and JPMA requested clarification of data and information contained in Figure 25 of the ''Child Restraint Side Impact Test Procedure Development'' technical report (velocity data plots from vehicle test 6635 and sled test 6904).[175] Dorel noted the peak velocity of the sliding seat appeared to be 27 km/h (16.7 mph). While the door velocity has a 34 km/h (21.13 mph) at T_0 and a 30.5 km/h (18.95 mph) door velocity at 50 ms, Dorel argued that this did not appear to be consistent with the specifications of the NPRM to: (1) accelerate the test platform to achieve a relative velocity (V_0) of 31.3 ± 0.8 km/h in the direction perpendicular to the SORL between the SISA sliding seat and the door assembly at the time they come in contact (time = T_0); and (2) ensure the sliding seat has a change in velocity of 31.3 ± 0.8 km/h and an acceleration within the proposed corridor.

Agency Response

The purpose of Figure 25 of the technical report was to illustrate that the event of the side impact sled test is very similar to the FMVSS No. 214 vehicle side impact crash. Test 6635 was one of the 4 vehicle tests that helped determine the door velocity. Because the vehicle inner door velocities are only measured in two points in the door and the initial door velocities are not stable as shown by the wide oscillations in the beginning of the event, the door velocity was taken once the door velocity signal was stabilized, which was between 30 km/h (18.6 mph) and 32.0 km/h (20 mph). These velocities were within the ranges specified in the NPRM. When the door interacts with the seat, the seat starts to move along with the door, and so the velocity of the seat is the same as that of the door. In the side impact sled test, the sliding seat interacts with the door and moves along with the door after crushing of the honeycomb structure. As shown in Figure 25 of the referenced technical report, the simulated door and sliding seat velocity of the sled test configuration is most similar to that of the Nissan Sentra.

Graco and MGA commented that they were unable to keep the door velocity at less than or equal to the initial door velocity (V_0) and greater than or equal to V_0-1 km/h during the interaction with the sliding seat. Graco presented a velocity pulse comparison from three different test labs, stating that, while it appeared that the velocity requirements and acceleration corridor were achievable on a consistent basis, their testing indicated that all three test facilities were not able to meet the requirement for the door structure velocity to stay within 1 km/h during contact with the sliding seat.[176] Graco surmised that the variation drivers between the three facilities were most likely the aluminum honeycomb area, differences in accelerometer types and locations, and differences in pressure settings. Graco suggested that the countermeasures to improve the consistency of aluminum honeycomb geometry may improve this inconsistent velocity. Graco compared velocity results to the actual proposed limits to understand if the targets were achievable and commented that the limits appeared to be achievable, but controls are needed to prevent the sliding door velocity from falling more than $V(T_0)$-1 during the door contact event.

NHTSA agrees with Graco that the honeycomb area and volume are important to control the sliding seat acceleration. This final rule's SISA specification includes details on the honeycomb material and its dimensions to improve reproducibility of the test results. However, we clarify to readers that the honeycomb area and/or volume can be modified, as necessary, to tune each system to obtain a sliding seat acceleration within the specified acceleration corridor; the regulatory text does not provide express specifications on this aspect of the procedure.

NHTSA agrees that the accelerometer type and location are important to achieve consistent results in different test facilities. Accordingly, the accelerometer type and location have been specified in the final SISA technical drawings.

Graco also requested that NHTSA provide more background information, including NHTSA's experimental data, regarding the need to control the relative velocity within 1 km/h while the door structure is in contact with the sliding seat. Graco suggested that if this is not a critical parameter, NHTSA should consider increasing the 1 km/h limit because test facilities did not meet the proposed specification. Similarly, MGA stated that it successfully met the sled test specifications but was unable to meet the requirement that the door velocity not decrease more than 1 km/h during the interaction with the sliding seat. MGA explained that during the time of interaction (which MGA assumed to mean the duration of the honeycomb crush—roughly 50 ms to 100 ms), MGA observed a velocity change from around 32 km/h to around 29 km/h (a 3 km/h change), and noted that the velocity change at VRTC was

[175] Sullivan et al. (2013).

[176] NHTSA–2014–0012–0042, at pg. 5. Graco stated that crash test facilities 1 and 3 had the door structure relative velocity drop more than 1 km/h [0.62 mph] and that crash test facility 2 did not meet the target velocity of 19.45 mph at T_0 and also demonstrated increased velocity during the time of contact with the sliding seat.

from 32 km/h to around 30 km/h (a 2 km/h velocity change).[177] MGA stated that the velocity change during the impact in both the test facilities would be considered to be outside the limit proposed by the NPRM, and suggested that this test specification be modified.

After considering these comments and other information, NHTSA is modifying the specification for door velocity. NHTSA added this specification because Takata had demonstrated[178] that when the door velocity reduces by more than 4 km/h during the interaction with the sliding seat, the HIC values and chest deflections measured on the Q3s were significantly reduced. However, as discussed further below, because NHTSA is specifying a relative velocity corridor between the door and the sliding seat—in addition to specifying the sliding seat acceleration corridor and the door velocity at the time of contact with the sliding seat—specifications of the door velocity during the interaction of the sliding seat can be widened to some extent. NHTSA's testing with the final SISA configuration showed that the sled/door velocity reduced 1.66 to 1.89 km/h during the interaction with the sliding seat, from the door velocity at time of initial contact with the sliding seat.[179] In order to ensure satisfactory reproducibility of the side impact test while providing reasonable flexibility to testing facilities to conduct the test, NHTSA is specifying that the door (sled) velocity during interaction with the sliding seat not decrease beyond 2.5 km/h from the door velocity at the time the door structure contacts the sliding seat. NHTSA believes that if the door velocity reduces beyond 4 km/h during the interaction with the sliding seat, it may not be possible to meet the specifications for the sliding seat acceleration corridor or the relative velocity corridor. This is discussed in more detail below.

4. Relative Door Velocity Profile

The 2014 NPRM proposed a door impact velocity and a sliding seat acceleration profile and requested comment on whether a relative door velocity profile should also be specified. NHTSA stated that a relative door velocity profile (with respect to the sliding seat) may be desirable to ensure a more reproducible interaction of the intruding door with the child restraint in different types of sled systems, and requested comments on the need for specifying a relative door velocity profile to improve reproducibility of the test procedure. NHTSA stated that, depending on whether the agency received information sufficiently supporting such a velocity profile, one may be included in the final rule.

Response to Comments

Dorel supported the inclusion of two separate velocity profiles, one for the bottom part of the sled that has the door and one for the sliding seat.[180] Dorel believed that two velocity profile specifications would provide improved parameters for repeatability at individual test facilities and improved reproducibility between test facilities.[181]

NHTSA has determined that specifying a door velocity profile relative to the sliding seat will improve the reproducibility of the interaction of the intruding door with the child restraint, and thus has defined the relative velocity between the sled door and the sliding seat. This is consistent with Dorel's suggestion of having two separate velocity profiles. Since the relative velocity is calculated using the velocities of the sled carriage and the sliding seat, it would be controlling both velocities to improve the repeatability and reproducibility throughout the event, not only at impact. If these velocities are not controlled, it may be possible to create different velocity profiles with more fluctuations that may result in different injury measures. The impact speed at time T_0 (the time at which the door contacts the sliding seat structure) is the relative velocity between the sled door and the sliding seat. While in an acceleration-type sled the velocity of the sliding seat is close to zero, there is some slight movement of the sliding seat before impact with the door assembly, and this movement may vary at each test facility. In a deceleration-type sled, the velocity of the sled door is zero at the time of the impact of the door assembly with the sliding seat. Each test facility will have to tune its system to determine the necessary velocity of the sled door to achieve the required relative velocity at the time of impact (T_0) with the honeycomb, regardless of whether it is done in an acceleration-type or deceleration-type sled system.

Graco commented against a relative velocity profile, believing this to possibly over-constrain the system. Graco requested that NHTSA provide data demonstrating that a CRS tested on both a deceleration and an acceleration sled would provide the same end results given that the test meets the currently defined constraints (door velocity requirements and sliding seat velocity/acceleration requirements). In response, NHTSA's demonstration of repeatability and reproducibility using both a deceleration and acceleration sled is discussed in the section below, ''Reproducibility and Repeatability.''

JPMA stated that, contrary to what was stated in the NPRM preamble, the proposed regulatory text for S6.1.1(b) specified a sliding seat acceleration pulse and a relative door velocity, but not a door velocity. JPMA added that the proposed regulatory text included a specification that the velocity of the sled be the same as the relative door velocity.

The NPRM proposed a specification to ''accelerate the test platform to achieve a relative velocity (V_0) of 31.3 ± 0.8 km/h in the direction perpendicular to the seat orientation reference line[182] (SORL) between the SISA sliding seat and the door assembly at the time they come in contact (T_0).'' This is not the same as proposing a specific door (sled) velocity profile; instead it is a specification that this door velocity could not be reduced more than 1 km/h during the interaction with the sliding seat. The door velocity and the ''relative door-sliding seat velocity'' are not necessarily the same. The velocity of the door relative to the sliding seat refers to the velocity difference between the door and the sliding seat. If the sliding seat velocity is equal to zero, the door velocity and the relative velocity of the door and sliding seat would be the same, but as there is some slight movement of the sliding seat prior to impact, the velocity of the door and the relative velocity of the door and sliding seat are not the same. In this final rule, NHTSA is adopting not only a relative velocity at time of impact of the door assembly with the sliding seat, but also a relative velocity corridor throughout the event (relative velocity corridor).

In the December 15, 2021 meeting, JPMA[183] requested that NHTSA specify an incoming sled carriage pulse corridor to reduce lab-to-lab test variability.

[177] NHTSA–2014–0012–0043, at pgs. 10–11.

[178] Study of Global Road Safety Partnership (GRSP) side impact testing. Takata Corporation. November 10, 2011. Docketed with this final rule.

[179] Interaction with the sliding seat is considered to be during the period from time T_0, when the sliding seat is first impacted by the door assembly, to the time when acceleration of the sliding seat reaches 0 G, usually between 48 and 58 ms from T_0.

[180] The sled carriage is the bottom part of the sled, and the sliding seat is on top of that.

[181] Dorel stated that, if sufficient repeatability and reproducibility were later validated, it would not object to the simplification of the requirement at that time.

[182] Seat orientation reference line means the horizontal line through Point Z as illustrated in Figure 1 of S4 in the regulatory text of the NPRM.

[183] *Supra,* see Docket No. NHTSA–2014–0012.

Additionally, JPMA requested adding bracing and structural improvements to the door assembly to eliminate dampened oscillatory motions during testing.

NHTSA disagrees with JPMA regarding the need to specify an incoming sled carriage acceleration pulse to minimize lab-to-lab variability. The testing at VRTC and at Kettering,[184] detailed in Section IX, demonstrated that specifications for the sliding seat acceleration profile corridor, the relative velocity at impact time, and the relative door velocity profile corridor are sufficient to ensure adequate reproducibility of the test not only at different test facilities but also when using different types of sled systems (deceleration and acceleration sled systems) where the incoming sled carriage acceleration pulses can be very different. Regarding rigidizing the door assembly, NHTSA does not see the need for it. While there may be some door oscillations, the side impact test has been validated against vehicle tests (which also showed door oscillations) and has consistently produced repeatable results in tests conducted at VRTC and Kettering. As long as the relative door velocity and the sliding seat accelerations are within required specifications (including the relative door velocity profile corridor adopted in this final rule), there is no need to make further structural improvements to the door assembly.

TRL recommended, based on its experience, that a relative velocity should be specified to ensure consistent test input conditions between test facilities. TRL commented that the side impact test in ECE R.129 was developed on a deceleration sled and that TRL validated this method for the European commission. TRL explained that this validation included investigating the repeatability and reproducibility of the test method as well as validating it against full scale crash tests. TRL added that this experience showed that the door-sled relative velocity is an important factor to control, and that without a control on this parameter the test severity can vary.

MGA commented that input constraints for just the sliding seat acceleration and relative sliding seat/door velocity limit should be sufficient.

NHTSA agrees with TRL that the velocity of the door relative to the sliding seat at the time the honeycomb contacts the sliding seat and throughout the side impact event is an important parameter that should be specified in this final rule. Figure 9 shows the average (dotted line) and the upper and lower boundaries (solid lines) of the velocity profile for the door relative to the sliding seat in sled tests performed during the development of the test procedure prior to the NPRM. The upper and lower boundaries of the relative door velocity represent the maximum and minimum values of the relative door velocity profiles in these sled tests.

BILLING CODE 4910–59–P

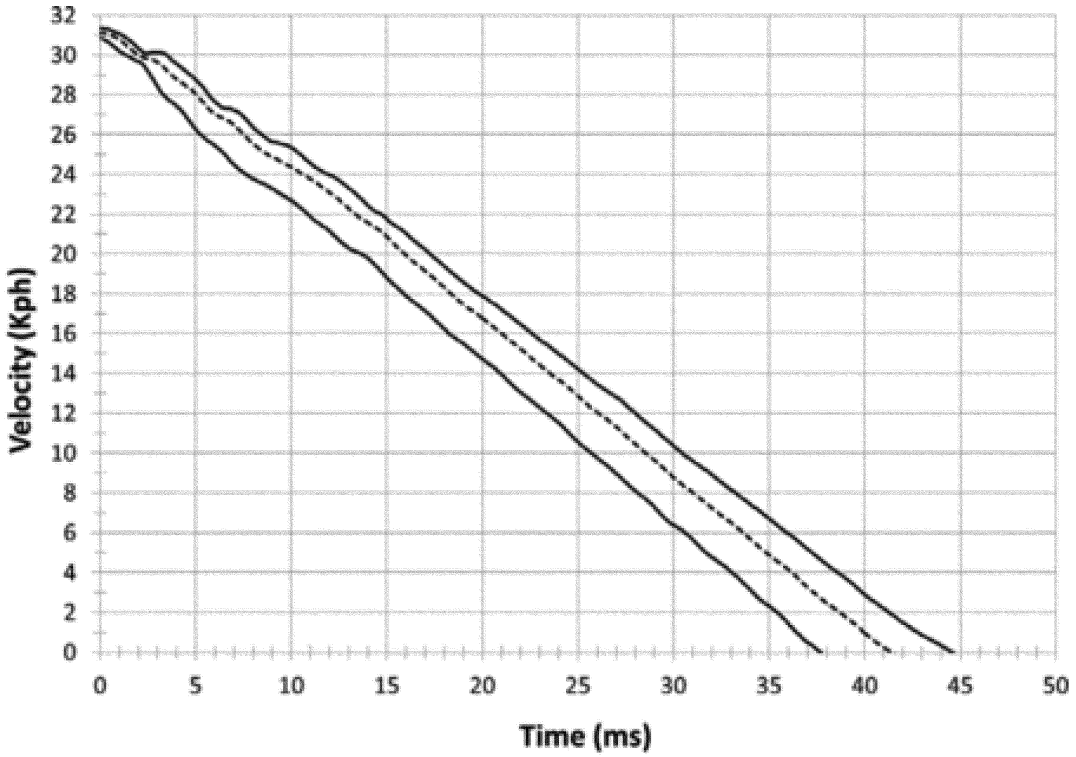

Figure 9 . Average profile and upper and lower boundaries of the relative velocity of the door with respect to the sliding seat.

After consideration of comments and other information, NHTSA has decided to include a requirement for the relative door velocity with respect to the sliding seat to control the door interaction with the sliding seat and CRS throughout the event. Further, TRL had commented that a defined range for door intrusion is a factor affecting the severity of the test and should be defined to ensure consistent test conditions. The relative door velocity specification in this final

[184] Wietholter, K. & Louden, A. (2021, November). *Repeatability and Reproducibility of the FMVSS No. 213 Side Impact Test.* Washington, DC: National Highway Traffic Safety Administration.

rule will also control the intrusion of the door into the seat compartment.

The coordinates of the relative velocity corridor are defined in the regulatory text. Using data from testing with the updated sliding seat design in two laboratories (see Figure 10), NHTSA developed a slightly different relative door velocity corridor with respect to the sliding seat from that presented in the preamble of the NPRM. This corridor is wider than the corridor in the NPRM to allow more flexibility in conducting the test at different test facilities while maintaining good repeatability and reproducibility. While Graco commented that a relative velocity corridor may over-constrain the system, we believe a relative velocity corridor is necessary to control the velocity throughout the event, which will help maximize repeatability and reproducibility.

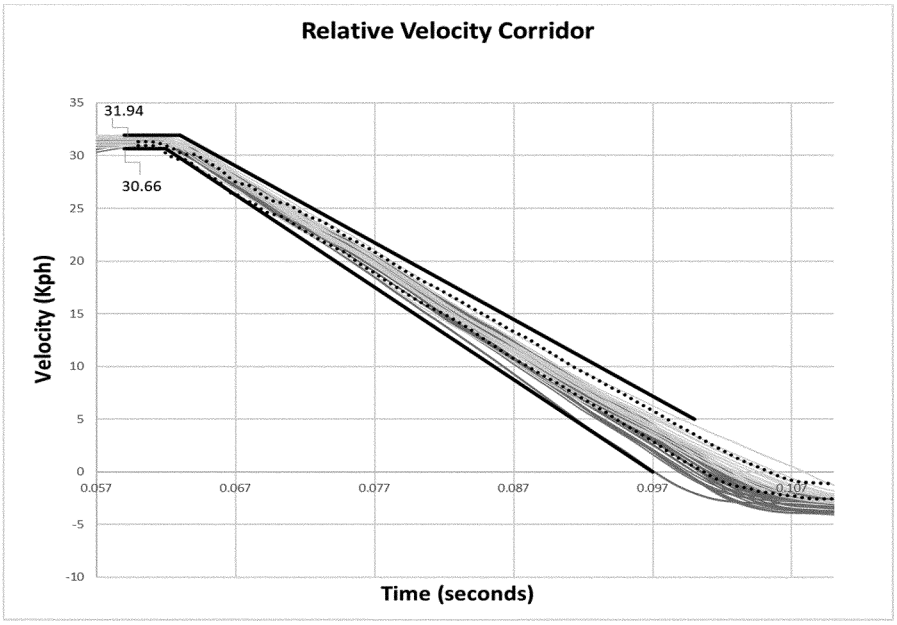

Figure 10. Upper and lower boundaries of the relative velocity of the door with respect to the sliding seat (thick black), VRTC tests (dark grey[185]), Kettering tests (light grey[186]) and NPRM relative velocity corridor (dotted).

BILLING CODE 4910–59–C

5. Relative Velocity at Impact Time (T_0)—Tolerance

NHTSA proposed an impact (T_0) relative velocity (V_0) of 31.3 ± 0.8 km/h, meaning at time of impact of the door with the sled, the relative velocity is within 31.3 +/ − 0.8 km/h. The agency performed a series of tests to determine the effect of the relative velocity at time T_0 on performance measures. NHTSA intended to conduct three tests of a CRS model by varying the relative velocity at time T_0 within a range of 1.6 km/h to cover the allowable range in velocity; however, one of the tests performed at the lower speed (30.28 km/h) fell out of the allowable relative velocity limits of 30.5 km/h to 32.1 km/h. Table 17 below shows the results of these repeat tests.

TABLE 17—SENSITIVITY ANALYSIS OF THE RELATIVE VELOCITY OF THE DOOR WITH RESPECT TO THE SLIDING SEAT AT TIME OF IMPACT (TIME T_0) WITH THE Q3S ATD IN A GRACO READY RIDE CRS INSTALLED FORWARD-FACING USING CRAS.

Database test No.	CRS	HIC15	Chest deflection [mm]	Impact relative velocity [km/h]	Impact relative velocity [mph]
10279	Graco Ready Ride	587	20.45	30.28	18.82
10273		723	19.82	31.06	19.29
10272		771	21.48	31.99	19.88
	Average	693.66	20.58		
	Std Dev	77.67	0.68		
	CV %	11	3		

[185] Tests that were within new relative velocity tolerance at impact time conducted at VRTC in April 2017 and November 2017.

[186] Tests that were within new relative velocity tolerance at impact time conducted at Kettering University in 2016.

Results showed that coefficient of variation (CV) [187] values for HIC15 reached 11 percent and chest deflection only 3 percent. Given the slightly high CV values for HIC15 at the extreme ranges, NHTSA concluded that reducing the tolerance for the specified relative velocity would be beneficial to control repeatability and reproducibility. NHTSA updated the impact relative velocity and tolerance to 31.3 ± 0.64 km/h (instead of 31.3 ± 0.8 km/h) to better achieve the desired repeatability and reproducibility within the parameters of sled systems. Both acceleration (at VRTC) and deceleration (at Kettering) sled systems were able to consistently produce impact relative velocity within the specified reduced relative velocity tolerance levels. Tests results with relative velocities within the reduced tolerances showed good repeatability and reproducibility, and are discussed in more detail in Section IX.

6. Longitudinal Crash Component

NHTSA determined the impact angle of the sled buck using data from the same ten small vehicle FMVSS No. 214 tests that were used to derive the acceleration corridor and door velocity. NHTSA evaluated the effect of the test buck's impact angle on dummy kinematics and injury responses through a range of testing at 0, 10, 15, and 20 degrees. Based on the tests and average impact angle calculated from the FMVSS No. 214 tests, NHTSA selected a 10-degree impact angle as the most appropriate. NHTSA found that a 10-degree impact angle on the sled test produced dummy responses closer to those measured by the ATD in the same CRS in the four MDB crash tests than the other impact angles. This work was described in detail in NHTSA's 2009 Initial Evaluation study.[188]

Dorel and JPMA noted that during sled tests conducted by the agency for the proposed rule, the child dummy experienced what the commenters described as artificial forward head movement before crash impact. Dorel described that the CRS seat back pulls away from the head in the agency's sled side impact test video (100629–3) prior to T_0 (T_0 being time of contact of the sliding seat with the door assembly). Dorel believed this movement to be an artifact of the 10-degree fixture angle and the pre-test distance of the sliding seat from the side door assembly.

Dorel stated that the sliding seat is positioned sufficiently away from the side door to allow the sled to reach a desired velocity (31.3 km/h) prior to the time the sliding seat starts to accelerate to a specific acceleration profile. The commenter stated that, during this run up time and prior to the interaction of the sliding seat with the door, the CRS seat back pulls away from the head. Dorel further stated that, in accordance with Newton's 1st law that an object at rest (in this case, the head) will stay at rest unless an external force acts upon it (in this case the CRS pulling the ATD torso), the ATD's head is tilted forward prior to the interaction of the striking vehicle and door.

Dorel provided data showing that the measured head displacement in sled tests with its forward-facing Safety 1st Air Protect CRS appeared to be as much as 86 mm (3.4 in) at T_0 and 185 mm (7.3 in) at T_0+29 msec.[189] Dorel noted that during this period, the dummy head remained in the center of the main sled rails while the 10-degree rails with the sliding seat pulled the CRS laterally away from the head. Dorel stated that this motion placed the head out of position in relation to the side wings of the CRS prior to impact and thus artificially deprived the dummy of the benefit of the side wing protection, and may artificially increase the measured injury values. Dorel stated its belief that this head motion appeared to react like pre-crash braking prior to the vehicle being struck in its side, which is not apparent in the FMVSS No. 214 MDB crash test video or data. Dorel explained that the FMVSS No. 214 test method does not incorporate pre-crash braking of the struck vehicle prior to MDB side crash in its simulation.

As additional support for this proposition about the artificiality of the proposed test, Dorel described a 2014 full scale, vehicle-to-vehicle side impact test conducted by Transport Canada Research & Development. Dorel explained that the struck vehicle in this test was a 2011 model year passenger car with the near side rear passenger position occupied by a Q3s dummy restrained by the internal harness of a forward-facing Alpha Elite (Non-Air Protect Model) CRS installed using the lower anchors of a child restraint anchorage system [190] and tether. Dorel provided screenshots of the dummy kinematics during the test and noted that at T_0-65 and T_0, there was no head displacement, while measurement from T_0 to T_0+29 showed ~24mm lateral movement of the Q3s dummy head.[191] Dorel also referenced a 2002 New Car Assessment Program side impact (SINCAP) test series that included CRSs in rear seating positions, where the ATD did not experience pre-crash head motions. Dorel provided still photographs of the dummy from a test with the Nissan Sentra with a Dorel Triad CRS installed in the rear seat.[192] Dorel stated that the photographs illustrate the same T_0 head motion references as the Transport Canada tests.

Dorel referenced its proposed test procedure (the Dorel-Kettering method proposed in a May 2009 petition, discussed above) that did not exhibit pre-crash event head motion. Dorel commented that the Dorel-Kettering method did not induce unintended head motion prior to T_0 (as the seat assembly is stationary at the time of impact). The commenter emphasized that the head motion of the ATD is not observed in the FMVSS No. 214 MDB tests that the agency used as the basis for NHTSA's proposed test method for FMVSS No. 213a and that Dorel used to develop its Dorel-Kettering side impact test.

Agency Response

The FMVSS No. 214 and the side NCAP crash tests are conducted with a stationary target vehicle, so there is no dummy head movement expected prior to impact. The MDB impacts the target vehicle at a crabbed angle (27 degrees) simulating a side impact of the target vehicle traveling at 24 km/h (15 mph) by the striking MDB traveling at 48 km/h. With the FMVSS No. 213a test procedure, the 10-degree angle of the motion of the sliding seat with respect to the sled system was to reproduce the longitudinal loading on the vehicle simulated in the FMVSS No. 214 vehicle test. The Dorel-Kettering test procedure does not have the capability of simulating this longitudinal component of the impact, which the agency believes is a limitation of their test. The longitudinal component of the impact is important to reproduce since real world data indicate that most side vehicle crashes have a longitudinal crash component.

As discussed in the NPRM, data indicate that child restraints should be designed to account for both longitudinal and lateral components of the direction of force in a side crash. Sherwood found that most side crashes

[187] The percent coefficient of variation (%CV) is a measure of variability expressed as a percentage of the mean.

[188] Sullivan et al. (2009).

[189] See NHTSA–2014–0012–0035, at pg. 3. In Dorel's first comment submission it reported a head displacement between 48 mm (1.9 in) to 54 mm (2.1 in).

[190] See 49 CFR 571.225.

[191] See NHTSA–2014–0012–0045, at pg. 3.

[192] Id.

had a longitudinal crash component.[193] A comparison of results of sled tests with the same door impact velocity conducted using the Dorel-Kettering method and the proposed FMVSS No. 213a side impact test showed that the dummy injury measures were consistently lower using the Dorel-Kettering test method. Dorel did not present any data demonstrating that the dummy responses in the Dorel-Kettering sled tests are similar to those observed in vehicle crash tests, while such data were provided in the NPRM. NHTSA believed the Dorel-Kettering test procedure needed further development to represent the crash environment experienced by children in child restraints in near-side impacts, and decided the test method would not protect children in side impacts as completely as the proposed FMVSS No. 213a test procedure.

The agency tracked head motion during its repeatability and reproducibility test series (discussed further below) at VRTC and Kettering to quantify dummy head nodding (forward displacement) during the test. The tests performed at VRTC and Kettering used the proposed FMVSS No. 213a test procedure. As shown in Table 18, the average head displacement at the time of impact with the door assembly (T_0) was 48.9 mm at VRTC and 62.1 mm at Kettering. The maximum range of head forward displacement in the X-direction at T_0 in the VRTC tests was 6.4 mm and 14.6 mm in the Kettering tests. Differences in head position at time of impact between VRTC and Kettering for the same CRS ranged from 17.4 to 59.5 mm. The difference in the position of the head at the time T_0 in a test facility or between the two test facilities did not translate into unacceptable variability in the performance measures as shown in the repeatability and reproducibility analysis, discussed further below. Instead, the difference in head position was attributable to the longitudinal crash component in the FMVSS No. 213a test, an aspect of a side crash present in real-world intersection-type crashes.

NHTSA concurs with Dorel that there is forward head displacement prior to time T_0 in the proposed FMVSS No. 213a test. However, this displacement realistically reflects real-world side crashes, as struck vehicles in side impacts are usually travelling forward, and reflects the FMVSS No. 214 vehicle-to-vehicle side crash. The forward head displacement is not a test artifact that renders the FMVSS No. 213a test artificial; rather, it is an indicator of the representativeness of the test. Accordingly, NHTSA did not make any changes to the test procedure impact angle.

BILLING CODE 4910–59–P

[193] Sherwood, et al. ''Factors Leading to Crash Fatalities to Children in Child Restraints,'' 47th Annual Proceedings of the Association for the Advancement of Automotive Medicine, September 2003.

Database Test No.	CRS Model	Lab	CRS Orientation	Dummy	Max. Head X Displacement (mm)	Head X Displacement at Impact (mm)	Range	Average Per Lab	Difference in Averages
10008	Chicco KeyFit 30	VRTC	RF	CRABI	46.4	43.4	1.3	43.6	-53.0
10009			RF	CRABI	49.2	43.0			
10010			RF	CRABI	51.4	44.3			
KET_071		Kettering	RF	CRABI	40.1	-12.5	5.0	-9.4	
KET_072			RF	CRABI	43.9	-7.5			
KET_073			RF	CRABI	39.1	-8.3			
10011	Britax Boulevard	VRTC	RF	CRABI	78.9	50.1	5.5	52.1	-17.4
10012			RF	CRABI	86.5	55.6			
10013			RF	CRABI	76.9	50.8			
KET_074		Kettering	RF	CRABI	58.1	27.5	12.5	34.8	
KET_075			RF	CRABI	64.7	40.1			
KET_076			RF	CRABI	66.2	36.7			
10014	Cosco Apt 40RF	VRTC	FF	CRABI	81.3	44.5	6.4	48.0	17.7
10015			FF	CRABI	94.6	51.0			
10016			FF	CRABI	92.7	48.6			
KET_077		Kettering	FF	CRABI	82.8	65.7			
10017	Graco Comfort Spor	VRTC	RF	Q3s	95.4	51.0	1.1	50.5	59.5
10018			RF	Q3s	92.7	50.7			
10019			RF	Q3s	91.6	49.9			
KET_068		Kettering	RF	Q3s	113.8	102.4	14.6	110.0	
KET_069			RF	Q3s	127.7	117.1			
KET_070			RF	Q3s	124.4	110.4			
10020	Graco Comfort Sport	VRTC	FF	Q3s	99.0	52.7	3.5	51.9	42.3
10021			FF	Q3s	101.1	53.3			
10022			FF	Q3s	100.8	52.0			
10100			FF	Q3s	102.1	49.7			
KET_064		Kettering	FF	Q3s	98.9	93.8	1.6	94.3	
KET_065			FF	Q3s	100.6	93.7			
KET_066			FF	Q3s	100.2	95.3			
10024	Evenflo Maestro	VRTC	FF	Q3s	119.7	47.8	1.9	47.0	33.9
10025			FF	Q3s	108.6	46.0			
10026			FF	Q3s	123.1	47.0			
KET_061		Kettering	FF	Q3s	100.2	88.7	11.7	80.9	
KET_062			FF	Q3s	91.3	77.0			
KET_067			FF	Q3s	88.0	77.0			

Note: RF means rear-facing CRS orientation, and FF means forward-facing CRS orientation.

BILLING CODE 4910–59–C

d. Test Set Up and Procedure

The proposed test procedure specified how child restraints would be installed and positioned on the sliding seat. In short, NHTSA proposed that:

- CRSs other than boosters would be attached to the SISA with the CRAS lower attachments and the child restraint's top tether would be attached if the owner's manual instructed consumers to attach the tether;
- Belt-positioning booster seats would be tested with Type 2 (lap and shoulder) belts; and,
- The CRS would be installed centered on the sliding seat, with the

[194] TEMA means ''TrackEye Motion Analysis'' software.

front face of the armrest on the door approximately 32 mm (about 1.25 inches) from the edge of the sliding seat (towards the CRS) at the time the honeycomb interacts with the sliding seat structure.

- The Q3s dummy would be positioned in the child restraint according to the manufacturer's positioning procedures.
- A CRS that is recommended by its manufacturer for use either by children having a mass between 5 and 10 kg (11 to 22 lb) or by children with heights between 650 and 850 mm, (25.6 and 33.5 inches) would be tested with the 12-month-old CRABI.
- A CRS that is recommended by its manufacturer for use either by children having a mass between 10 and 18.1 kg (22 to 40 lb) or by children with heights between 850 and 1100 mm, (33.5 and 43.3 inches) would be tested with the Q3s dummy.

1. CRS Attachment

i. Lower Anchor and/or Seat Belt CRS Installation

FMVSS No. 213 currently requires most types of CRSs to meet the frontal crash requirements both when secured to the vehicle seat assembly with a vehicle belt, and when secured by a child restraint anchorage system (CRAS) (S5.3.2).[195] The 2014 side impact NPRM proposed to test CRSs other than booster seats with just the CRAS, as preliminary tests showed similar performance by the seats when attached by CRAS or by a Type 2 belt.[196] NHTSA requested comments on whether the proposed standard should also require these car seats to meet FMVSS No. 213a when attached to the seat assembly with a belt system.[197] Under the NPRM, belt-positioning booster seats subject to the standard would be tested with a Type 2 belt.[198]

Comments Received

Many commenters recommended that NHTSA conduct CRS testing under two different installation modes: by CRAS and by a 3-point lap/shoulder (Type 2) seat belt system.

Safe Ride News (SRN) argued that both a CRAS and a belt installation should be tested, as children under 18.1 kg (40 lb) will frequently be in a CRS that is installed with a seat belt due to the predisposition of some caregivers not to use CRAS, or the lack of lower anchors in a vehicle position (*e.g.,* the center rear seat of the second row on most vehicles). SRN argued that non-passing results would compel manufacturers to improve their CRS designs for both lower anchor attachments and for seat belt attachment, and ensure an adequate routing of the seat belt ''path'' through the CRS to meet the side impact standard. SRN also requested the agency to provide the data supporting NHTSA's statement in the NPRM that the performance of the child restraints, when using CRAS and the belt system, were similar.

Britax and JPMA commented in support of the use of the Type 2 belt system, arguing that the majority of vehicles in the current fleet now have lap/shoulder belts across the rear seating compartment, and the use of Type 1 belts for testing is not consistent with the majority of in-vehicle belted installations. UPPAbaby also supported use of a Type 2 belt test as presenting a ''realistic situation in the majority of vehicles today.''

Mr. Hauschild believed that NHTSA's finding that ''the Type II [sic] belt system showed similar performance metrics to that obtained when the CRSs were attached using [CRAS]'' was contrary to other research that examined CRAS and belt anchors.[199] He believed that CRS testing should include both CRAS and Type 2 belt systems, and that further studies may be needed to compare the performance of CRAS and Type 2 belts for side impact events.

Advocates recommend that each CRS be required to pass the proposed testing under all installation conditions specified by the manufacturer in its owner instructions for the specific restraint. Advocates stated that, if a CRS can be installed with CRAS, a Type I belt, or a Type 2 belt without the top tether, then it should be required to pass the proposed tests under all those conditions to ensure that the child will be offered the proper amount of protection regardless of the installation method selected by the caregiver.

Consumers Union (CU) also supported testing CRSs with both the CRAS attachment and Type 2 belts. CU stated that Type 2 belts are prevalent in current model vehicles, often occupy different belt paths on the child restraint than the CRAS belts, and use different ''lockoff'' mechanisms than in CRAS installations. (Lockoff refers to the use of CRS components that cinch or clamp the vehicle seat belt to prevent loosening of the seat belt. In some cases, CRS lockoffs, which vary by CRSs, can be used in lieu of ''locking'' the vehicle seat belt retractor using the standardized lockability feature of a vehicle's seat belt.) CU also stated that Type 2 belts may allow some additional ''pivoting'' of seats around their ''buckle'' side that may not be seen with CRAS, which may be critical to a comprehensive review of side impact performance. The commenter also referred, as did SRN and JPMA, to FMVSS No. 213's labeling requirements that restrict use of CRAS to where the combined weight of the CRS and child is less than 29.5 kg (65 lb). These commenters argued that this restriction on CRAS use will likely produce a trend toward increased use of seat belts to install CRSs, particularly forward-facing CRSs and restraints recommended for heavier children. The commenters argued that NHTSA's not requiring testing of the seat belt installation would overlook this prominent mode of use. However, CU stated, as did JPMA and Britax,[200] that testing with Type 1 (lap only) belts should not be considered as lap belts are rarely seen in current model vehicles. They further argued that a lap belt test is not necessary because most CRSs are designed so that the lap belt attachment and loading path are the same as those used by CRAS straps.

NTSB commented that parents or caregivers may choose to install a CRS using the vehicle's seat belt for many reasons, including ease of installation and a lack of seating positions with lower CRAS attachments. NTSB stated

[195] The belt system currently specified in FMVSS No. 213 is a lap belt (Type 1 belt). The November 2, 2020 NPRM proposed changing the belt to a lap/shoulder belt (Type 2 belt).

[196] As the original Takata test sled only had a Type 2 belt system, NHTSA modified the test bench seat to incorporate a child restraint anchorage system.

[197] 79 FR at 4589, col. 2.

[198] When the 2014 NPRM was published, it was possible for booster seats to be subject to the proposed standard, if such boosters were sold for children weighing less than 18.1 kg (40 lb). However, the November 2, 2020 NPRM proposed to amend FMVSS No. 213 so that booster seats could not be sold for children weighing less than 18.1 kg (40 lb). If the November 2020 proposal is adopted, booster seats will not be permitted to be sold for children weighing less than 18.1 kg (40 lb)—so the side impact requirements of FMVSS No. 213a will not apply.

[199] The commenter referred to research that found there is less excursion using the CRAS compared to vehicle belts. In evaluating the comment, we determined that the research to which the commenter refers studied differences in performance involving far-side impacts. NHTSA's statement on the two different attachment methods having similar performance was referring to near-side impact tests where paired comparisons using different CRS installation methods resulted in HIC15 and chest deflection results that were not significantly different. We have not engaged in studies to assess the far-side performance of CRSs so we cannot confirm the findings of the study cited by Mr. Hauschild.

[200] Britax stated that requiring testing under FMVSS No. 213a with the Type 1 belt installation would unnecessarily increase the efforts and expense of testing, with minimal real-world benefits.

that an analysis of 79,000 CRS checklist forms by Safe Kids USA confirmed that approximately 60 percent of the examined CRSs were installed with seat belts. The commenter believed that, given the prevalence of seat belt installations, safety would be better served by requiring the CRS to be tested under all vehicle securement conditions. Furthermore, NTSB argued, because the proposed rule focused on assessing the capability of the CRS to maintain its structural integrity, requiring the restraint system to be tested in all installation options would ensure the strength of the entire seat system, including the multiple routing options for various types of seat belts. NTSB added that, because the dynamics of the CRS interaction with the intruding vehicle door are integral to the test, the orientation of the seat at the point of impact may affect the kinematic response of the dummy. NTSB argued that varied installation options may result in slightly different seat orientations when the seat interacts with the intruding door, which will affect the outcome of the test. NTSB concluded that testing all installation options would further ensure that CRSs provide adequate safety.

NTSB further argued that, since the testing cost estimated by NHTSA is less than $0.01 per CRS, requiring manufacturers to conduct the same tests under three securement conditions—CRAS, Type 1 seat belts, and Type 2 seat belts—would not be burdensome, and would be well worth the effort to ensure that the CRS provides the intended level of side impact protection, regardless of how it is attached to the vehicle. NTSB encouraged NHTSA to revise the proposed rule to require testing with the CRS attached to the SISA using the lower anchorage attachments, a Type 1 seat belt, and a Type 2 seat belt.

In contrast to the above, IIHS and Graco stated that testing only with the CRAS configuration was sufficient. IIHS believed it was reasonable to forgo testing with lap and shoulder belts as NHTSA found no meaningful difference in performance in preliminary testing comparing CRSs attached with lower anchors with those attached with seat belts. Based on NHTSA's results showing that Type 2 CRS installations perform the same as CRAS CRS installations, Graco recommended only testing with CRAS.

Dorel did not expressly recommend CRAS or seat belt installation for testing, but provided data indicating CRAS testing showed little difference in the HIC and chest deflection data when compared to Type I (lap) tests.[201]

Agency Response

After considering the comments and other information, NHTSA has decided there is a safety need to assess CRSs performance in a Type 2 belt test in addition to the CRAS test. Based on a review of the comments and an assessment of current CRS designs, NHTSA concludes that both tests are necessary to evaluate CRS performance properly, particularly regarding the structural integrity of the restraint when subjected to crash forces imposed on the restraint using the different loading paths.

Among NHTSA's preliminary tests for the NPRM[202] were four (4) paired tests to compare CRS performance when installed with lower anchors and with 3-point (Type 2) seat belt. Paired comparisons showed that HIC15 and chest deflection results with the different installation methods were not significantly different (p>0.05), as seen in Table 19, below.

TABLE 19—PAIRED TEST RESULTS FOR COMPARING THE PERFORMANCE OF CRSS INSTALLED USING LOWER ANCHORS (LA ONLY) AND USING 3-POINT LAP-SHOULDER BELTS (SB3PT)

Database test No.	Dummy	CRS	Orientation	Attachment method	HIC15	Chest deflection [mm]	Head-door contact
9624	Q3S	Graco Comfort Sport	RF Convertible	LA Only	729	26.9	Yes.
9622	Q3S	Graco Comfort Sport	RF Convertible	SB3PT	793	23.1	Yes.
8260*	Q3s	Graco My Ride	RF Convertible	LA Only	751	25.0	No.
8264*	Q3s	Graco My Ride	RF Convertible	SB3PT	681	31.0	No.
8265*	Q3s	Cosco Scenera	RF Convertible	LA Only	748	34.0	Yes.
8266*	Q3s	Cosco Scenera	RF Convertible	SB3PT	748	28.0	Yes.
9633	Q3S	Graco Comfort Sport	FF Convertible	LA Only	579	23.0	Yes.
9632	Q3S	Graco Comfort Sport	FF Convertible	SB3PT	649	19.1	Yes.
8253*	Q3S	Evanflo Chase	FF Converrible	LA Only	987	20	Yes.
8257*	Q3S	Evenflo Chase	FF Convertible	SB3PT	784	25	Yes.
8252*	Q3s	Evenflo Triumph Advantage DLX	FF Combination	LA Only	446	16.0	No.
8256*	Q3s	Evenflo Triumph Advantage DLX	FF Combination	SB3PT	479	13	No.
8258*	12MO	Graco My Ride	RF Convertible	LA Only	755	N/A	No.
8261*	12MO	Graco My Ride	RF Convertible	SB3PT	748	N/A	No.
9626	12MO	Combi Shuttle	RF Infant	LA Only	478	N/A	Yes.
9625	12MO	Combi Shuttle	RF Infant	SB3PT	438	N/A	Yes.
9628	12MO	Safety 1st OnBoard 35	RF Infant	LA Only	625	N/A	No.
9627	12MO	Safety 1st OnBoard 35	RF Infant	SB3PT	615	N/A	No.
8259*	12MO	Combi Shuttle	RF Infant	LA Only	450	N/A	Yes.

[201] NHTSA–2014–0012–0045, at pg. 6.

[202] *See* Sullivan et al. (2013) for results of these tests.

TABLE 19—PAIRED TEST RESULTS FOR COMPARING THE PERFORMANCE OF CRSS INSTALLED USING LOWER ANCHORS (LA ONLY) AND USING 3-POINT LAP-SHOULDER BELTS (SB3PT)—Continued

Data-base test No.	Dummy	CRS	Orientation	Attachment method	HIC15	Chest deflection [mm]	Head-door contact
8262 *	12MO	Combi Shuttle	RF Infant	SB3PT	521	N/A	Yes.

* Preliminary tests from NPRM.
Note: SB3PT means 3-point belt, *LA Only* means lower anchorages of the child restraint anchorage system, RF means rear-facing and *FF* means forward-facing.

It was on those data that NHTSA made a preliminary determination that the differences in performance of the restraints were not significant based on the method of installation. However, NHTSA now agrees that testing a CRS in both installation modes (using CRAS and a Type 2 (lap and shoulder) belt) will more appropriately evaluate CRS performance, including structural integrity, under the different loading paths in a CRAS installation and in a seat belt installation.

The agency agrees with the commenters supporting inclusion of a Type 2 belt attachment test that, while many CRSs share the same belt paths for lower anchorages and seat belt installations, there are some CRSs that do not (such as CRSs that use a rigid CRAS lower attachment or like the Britax Clicktight seats [203]). Testing in both attachment modes is needed for a more effective evaluation of the side loading of the CRS in a side crash, as the different points of attachment of the CRS to the vehicle seat and the different routing paths of the vehicle seat belt through the CRS can affect how the CRS is loaded by the seat belt during the side impact event.

NHTSA also agrees with commenters that testing with a Type 2 belt configuration is appropriate because of the CRAS weight restrictions. Under current FMVSS No. 213, child safety seats manufacturers must instruct owners not to use the CRAS lower anchors if the mass of the seat, combined with the mass of the child for whom the CRS is recommended, exceed 29.5 kg (65 lb). Caregivers are instead instructed to use the vehicle's belt system to install the CRS. As the provisions of FMVSS No. 213 envision Type 2 belt installations as vital to CRS installations, it is prudent for the agency to adopt a Type 2 belt test in FMVSS No. 213a to ensure all safety seats for children weighing less than 18.1 kg (40 lb) provide adequate side impact protection. Further, data show that a substantial portion of caregivers in the field use seat belts, rather than CRAS, to install CRSs.[204] For the above reasons, adopting a Type 2 belt test in addition to a CRAS test best meets the MAP–21 mandate to improve the protection of children seated in CRSs in side crashes.

As to the type of belt system, NHTSA believes that just a Type 2 belt test is appropriate, not both a Type 1 belt (lap belt) test and a Type 2 belt test. NHTSA agrees with CU and Britax that a Type 1 seat belt configuration is rare in the light passenger vehicle fleet and should not be adopted as a test configuration for lack of a safety need for such a test. In the November 2, 2021 NPRM upgrading the frontal impact sled test, NHTSA proposed to use a Type 2 seat belt instead of a Type 1 seat belt for the same reasons, *i.e.,* Type 1 configurations are mostly unavailable in the vehicle fleet.[205] Given the prevalence of Type 2 belts in the rear seats of current passenger vehicles, testing CRSs with the type of seat belt caregivers would be using better ensures the representativeness of the compliance test.

In supporting use of a Type 2 belt test, UPPAbaby also asked about a ''carrier only configuration,'' and suggested ''this should be taken into account as a possible use situation, and added to the proposed rulemaking, again using a Type II [sic] belt configuration.'' NHTSA understands the commenter as suggesting that FMVSS No. 213a should require infant carriers designed with a detachable base to be tested without their base in a Type 2 belt. The agency will test infant carriers with bases with CRAS and with a Type 2 belt, but, for now, the agency has decided not to test the carriers without their bases. The agency conducted two tests of infant carriers with no base (Evenflo Discovery and Combi Shuttle) and both showed no head to door contact. The agency has not conducted extensive testing on infant carriers without the base, but the testing suggests that infant carriers can meet the standard with and without a base. Thus, NHTSA does not find justification to add another test of the restraints to check performance of the carriers when the base is not used.

The drawings for the SISA that were placed in the docket for the NPRM show the proposed Type 2 seat belt configuration. The final version of the drawings incorporated by reference by this final rule also depict the Type 2 seat belt anchorages.

MGA commented that the NPRM did not include provisions about the configuration of the belt anchor on the inboard side of the lap belt of the Type 2 belt for Type 2 installation configurations. MGA stated that FMVSS No. 213 requires the belt anchor to lock the belt, while a similar Transport Canada standard (Canadian Motor Vehicle Safety Standard No. 213) incorporates a freely-sliding belt anchor.[206] MGA argued that, since most vehicles in the fleet have a free-sliding belt buckle tongue on the inboard side, it makes more sense to replicate this condition. MGA suggested that, if the Type 2 belt in FMVSS No. 213a were to have a freely-sliding belt anchor, FMVSS No. 213 should be updated in the future as well.

The final drawing package of the SISA details the design of the belt anchorages and hardware used in the Type 2 seat belt installations, as they will be part of the FMVSS No. 213a configuration. The final drawing package incorporates an inboard freely sliding belt anchor as suggested by MGA, to replicate real-world conditions. Most vehicles in the fleet have a freely sliding belt anchor. The proposed changes to FMVSS No. 213 (frontal sled test) set forth in the November 2, 2020 NPRM also describe an inboard freely sliding belt anchor. NHTSA is currently considering the comments to the November 2, 2020 NPRM.

[203] ClickTight Installation Systems in Convertible Car Seats, Britax, *https://web.archive.org/web/20201201232308/https://us.britax.com/product-knowledge/articles/clicktight-convertibles/.*

[204] NCRUSS found that 34% of rear-facing infant carriers, 23% of rear facing convertible and 44% of forward-facing CRSs were installed with seat belts.

[205] The NPRM also proposed to amend FMVSS No. 213 to require child restraints to meet the requirements of Standard No. 213 when attached by the Type 2 belt and to remove the requirement that CRSs must meet the standard when attached by a Type 1 (lap) belt.

[206] A freely sliding belt anchor is a load bearing device through which the seat belt webbing may freely pass and change direction. The belt anchor is bolted to the SISA. The freely sliding belt anchor is similar in design and function to a guide loop used to properly position the torso portion of the webbing of a driver's seat belt.

ii. Tethered vs. Non-Tethered CRS Installation

The NPRM proposed that the agency would attach the top tether of the safety seat if a tether were provided and the owner's manual instructs the caregiver to attach it.

Comments on whether the top tether should be attached during testing were mixed. Some commenters suggested that testing without the top tether would be representative of real-world CRS installation in vehicles, as only about half of CRSs are installed using the top tether. Other commenters recommended testing with the tether, notwithstanding real-world use of the tether. Those commenters generally supported use of informational and educational campaigns to encourage tether use. Some commenters recommended testing both with and without the top tether attached, as is done under the frontal impact test of FMVSS No. 213.[207]

After considering the comments, NHTSA has decided to adopt the proposed procedure to test forward-facing CRSs with the tether attached, as test results showed that the use or non-use of the tether does not produce significantly different results in the side impact test environment. Each installation issue is discussed in turn below.

Comments Received

Many commenters recommended testing forward-facing CRSs without the top tether attached. These included IIHS, UMTRI, Safekids, and SRN. Several proponents of an untethered test pointed to studies showing that tether use is low. IIHS discussed that observational surveys have found that about half of all forward-facing CRSs are installed without using the top tether[208] and that the dynamic performance of CRSs changes when the top tether is used.[209] IIHS stated that because tether non-use is common in the field, dynamic testing of CRSs should include a no-tether condition to ensure any countermeasures developed as part of the testing program would be effective at reducing injuries under those circumstances. SRN stated that, if the tether makes little difference in a near-side impact as had been asserted, it is necessary to know more about the relative effectiveness between both installation methods.[210] SRN also wanted to know if the conclusion that the tether has little effect in performance on a near-side impact was made based on comparison testing done with tether anchors mounted in different locations. SRN believed if there is truly no benefit provided by the tether in a side impact, then it suggests adopting an untethered test.

Some commenters suggested both a tethered and untethered test. Mr. Hauschild suggested that for seats that have a tether, they should be tested both with and without the tether. The commenter explained that consumers are likely to use the CRS both ways, there may be different kinematics of the dummy, and that many older vehicles still on the road today may not have an upper anchor for the tether. Advocates recommended that each CRS be required to pass the proposed testing under all installation conditions permitted by the manufacturer for the specific restraint.

In contrast to the above, CU, NTSB, Dorel, Britax, Graco, and JPMA recommended testing with the tether attached. CU supported the use of the top tether for testing all forward-facing CRSs, stating that the tethers provide benefits in stabilizing and reducing head excursion in frontal crashes, and that additional education and information should be extended to encourage tether use. CU stated that its frontal test protocol plans to test all forward-facing CRSs with top tethers attached.

NTSB noted that the current correct usage rate for the top tether is low—approximately 59 percent—in passenger vehicles, minivans, light trucks, and sport utility vehicles. NTSB agreed that forward-facing CRSs should be tested with the top tether, as recommended by the manufacturer, but urged NHTSA to encourage both vehicle and CRS manufacturers to increase the ease of use for top tethers. Dorel supported the requirement that the top tether be attached during the side impact test. Dorel stated that their data showed little difference between struck near side ATD data between tethered and untethered tests. Dorel added that the inclusion of untethered tests may not provide additional meaningful information of the contact-side of the test configuration and the resulting HIC scores.

Britax also supported the use of tethers during side impact testing. Britax explained that, similar to the effect of deep side wings and impact absorbing foam, the use of the tether enhances the performance of the CRS during side impact by reducing the lateral movement of the CRS, and this reduction in lateral movement assists in containing the head within the CRS. Britax stated that requiring side impact testing without the use of the tether would unreasonably deny CRS manufacturers the benefits of tether technology, as opposed to frontal impact testing of CRS (where the CRS is tested with and without the tether), especially in the context of the unique lateral forces generated in the side impact testing protocol. Britax concluded that using the tether diminishes the potential for head injury.

Dorel and JPMA commented that they did not see any relationship between HIC15 scores in paired tests of two CRS models installed using CRAS (with tether) and with a Type I seat belt without the tether attached.[211] Graco stated that it always recommends the use of the top tether when installing a forward-facing CRS. Graco added that it does not believe there is any benefit in conducting the side impact test both with and without the top tether.

Agency Response

NHTSA performed two paired tests to evaluate the effect of the use of the tether in the proposed side impact test. Two tests were performed using the tether and two without the tether, as shown in Table 20. Paired comparisons showed that the tests results (HIC and chest deflection) with and without tether were not significantly different ($p>0.05$).

[207] A more stringent head excursion requirement applies in the test in which the tether is attached.

[208] Citing Cicchino & Jermakian 2014, Decina & Lococo 2007, Eichelberger et al. 2014, Jermakian & Wells 2011, O'Neil et al. 2011.

[209] Citing Kapoor et al. 2011, Lumley 1997, Menon & Ghati 2007.

[210] SRN attributed this assertion to NHTSA but the statement is not in the NPRM.

[211] NHTSA–2014–0012–0045, at pg. 6.

TABLE 20—COMPARISON OF CRS PERFORMANCE IN TESTS OF CRSS INSTALLED WITH AND WITHOUT TETHER WITH THE Q3S DUMMY

VDB test No.	CRS	Orientation	Attachment method	HIC 15	Chest deflection [mm]	Contact
9630	Graco Comfort Sport.	FF Convertible	CRAS	640	21.1	Yes.
9631	Graco Comfort Sport.	FF Convertible	SB3PT&T	580	18.6	Yes.
9633	Graco Comfort Sport.	FF Convertible	LA Only	579	23.0	Yes.
9632	Graco Comfort Sport.	FF Convertible	SB3PT	649	19.1	Yes.

Note: SB3PT means 3-point belt, *SB3PT&T* means 3-point seat belt and tether, *CRAS* means the full child restraint anchorage system, *LA Only* means lower anchorages of the child restraint anchorage system, and *FF* means forward-facing.

While tether use is extremely important in frontal crashes, in near-side impacts the impact happens so quickly that the tether is never engaged as the struck vehicle door intrudes into the seat compartment. Due to this fact, and the results in the above table showing that the use or non-use of the tether does not produce significantly different results in the FMVSS No. 213a side impact test environment, NHTSA will test forward-facing CRSs with the tether attached.

Testing forward-facing CRSs with the tether attached will help minimize any potential variability in test results due to setting up the CRS while allowing a thorough evaluation in side impact of all countermeasures provided by the CRS. Testing with and without tether, as suggested by some commenters, would be unnecessarily burdensome as the CRS would perform the same way in both tests. Since the performance of the CRS when installed with or without the tether is not significantly different, the test still ensures good performance in the field even when tether use is low.

NHTSA notes that frontal sled tests of forward-facing CRSs with and without tether have different performance as the use of a tether results in improved injury values compared to the un-tethered tests. Therefore, the need of testing in both conditions is necessary to ensure their performance at two different stringency levels (*i.e.* head excursions 813 mm for untethered test and 720 mm for tethered test) in a frontal impact and ensure the safety of the CRS whether they are used with or without the tether. While the top tether is used, if available, during the side impact test procedure, in forward-facing CRSs, this does not negate in any way the need to meet frontal requirements, both with and without a tether.

Separate from this rulemaking, and as discussed further below, the agency is currently working on potential improvements in tether use by improving the marking of tether anchorages in vehicles.[212] The purpose of the marking is to increase consumer awareness of the existence of tether anchorages and to facilitate consumer education efforts.

With respect to SRN's request to conduct tests with tethers mounted in different locations, NHTSA selected the tether location on the SISA based on the vehicle survey. Thus, it is highly representative of where tether anchorages are located in vehicles. Since tether use or non-use does not affect the performance of the CRS in the side impact test, the agency believes the tether anchorage position will not influence the performance of the CRS in the near-side impact environment selected for FMVSS No. 213a. Thus, there is insufficient need to vary the location of the anchorage in the test.

NTSB urged NHTSA to encourage both vehicle and CRS manufacturers to increase the ease-of-use of top tethers. NHTSA's January 23, 2015 NPRM, *supra,* proposed to amend FMVSS No. 225, ''Child restraint anchorage systems,'' to improve the ease-of-use of the lower anchorages of child restraint anchorage systems and the ease-of-use of tether anchorages.[213] The NPRM also proposed changes to FMVSS No. 213, ''Child restraint systems,'' to amend labeling and other requirements to improve the ease-of-use of child restraint systems with a vehicle anchorage system. The NPRM, issued in response to MAP–21, proposed changes to Standards No. 213 and 225 to increase the correct use of CRSs and child restraint anchorage systems and tether anchorages, with the ultimate goal of reducing injuries and fatalities to restrained children in motor vehicle crashes. NHTSA is continuing its work on this rulemaking. The Fall 2021 Agenda notes that a final rule is planned for March 2022.

iii. Distance Between Edge of Armrest and Edge of Seat

NHTSA proposed to specify in the test procedure that: (a) the CRS would be centered on the sliding seat; and (b) that the front face of the armrest on the door would be approximately 32 mm (about 1.25 inches) from the edge of the sliding seat towards the CRS at the time the honeycomb interacts with the sliding seat structure. The prescribed positions of the CRS (centered 300 mm (about 12 inches) from the edge of the seat), and the armrest from the edge of the seat at the time the door first interacts with the sliding seat structure, results in the intruding door contacting wider CRSs earlier in the event than narrower CRS. This contact of the intruding door earlier in the event to wider CRSs results in a higher door impact velocity to the wider CRSs than to narrower CRSs, which is an outcome representative of how different CRS designs would perform in a specific vehicle in the real world. On the other hand, NHTSA sought comment on whether the distance of the front face of the armrest from the edge of the sliding seat at the time the sliding seat starts to accelerate should be varied, such that all CRSs, regardless of their width, would contact the impacting door at the same time and with the same initial impact speed.

Comments Received

Comments were divided on this issue. Advocates recommended that the distance between the CRS and the armrest be varied so that all CRSs, regardless of their width, contact the impacting door at the same time and with the same initial impact speed. Advocates stated that since the premise

[212] In response to MAP–21, on January 23, 2015, NHTSA published an NPRM to improve the usability of child restraint anchorage systems, including standardizing and clarifying the marking of tether anchorages (80 FR 3744). The RIN for the rulemaking is 2127–AL20. It may be tracked in the Unified Agenda of Regulatory and Deregulatory Actions (Agenda).

[213] 80 FR 3744 (Jan. 23, 2015).

of the proposed testing is a component level test of the CRS (rather than the CRS and a given vehicle combination, as in a full-scale test), this change would ensure that all CRSs are subject to the same conditions. The commenter believed that, given the wide range of vehicle designs in which a CRS may be installed, artificially allowing CRS design specifications, such as width, to influence the conditions of the test would be inappropriate. Advocates suggested that NHTSA establish a reasonable specified distance between the armrest and CRS through a vehicle survey and by testing. The distance should represent the most common and most appropriate distance for the test protocol, while also providing the most stringent performance test for CRSs in use today.

Dorel and JPMA commented that both approaches (keeping the distance constant, or varying the distance to account for CRS width) each have their unique conditions for introducing variability into the test, which can drive CRS designs to be either wide or narrow to obtain the best HIC measures. In support of this statement, Dorel provided a chart comparing wide and narrow forward-facing (FF) CRSs installed with lower anchorages of the CRAS and tethered, or with a belt and untethered. These tests kept a constant distance of the front face of the armrest from the edge of the seat at T_0. In the tests, the wider CRS had lower chest deflection results compared to the narrower CRS.[214]

Dorel and JPMA believed that keeping the distance constant from the front face of the armrest from the edge of the seat at the time the sliding seat starts to accelerate, as proposed, could more accurately reflect the consistent centering of the seating position between the anchors to the door. Dorel and JPMA explained that this also naturally aligns the center of the ATD with the center of the anchorages as well and the ATD's distance to the door, and that it could drive CRS designs to optimize on this condition, which would favor wider CRS designs. Dorel added that the ATD forward head movement discussed in its comment also enters more prominently in this condition. Dorel also commented that the distance between the armrest and the CRS has the potential to catch the door during the run up in acceleration phase very differently, which could result in manufacturers developing narrower CRSs as they would couple sooner in the event at a lower velocity.[215]

Dorel stated that the second option (distance varied) is a more stable and repeatable condition, while option 1 (distance kept constant) would introduce significant differences in testing conditions. Dorel stated that the test should replicate conditions that would drive CRS designs to yield meaningful and measurable countermeasures to side impact injury mechanisms. Dorel concluded the test must replicate real world conditions.

CU commented that the distance of the front face of the armrest from the edge of the seat at the time the sliding seat starts to accelerate should be kept constant. CU explained that, unlike in a frontal crash, prior to which the front seatbacks can be moved to provide additional spacing for a CRS, the distance to a door in an actual vehicle will be fixed and cannot be altered. For this reason, CU recommended leaving the door/armrest at a fixed distance. CU stated that the width of CRSs would determine the point and velocity at contact with that door, which would best simulate that same condition in a real vehicle crash. In contrast, CU stated that a distance that is altered to be equal for all CRSs would not simulate such real-world conditions.

UMTRI favored the proposed test condition that all child restraints be placed on the same pretest location on the bench, such that the loading panel will contact wider child restraints before it would contact narrow ones, as this represents a realistic vehicle situation. UMTRI added that this may encourage child restraint manufacturers to design narrower seats that would fit better in adjacent vehicle seating positions.

Britax also recommended that the distance not be varied such that all CRSs regardless of width contact the door within similar time and velocity requirements. Britax explained that varying the distance defeats the purpose and benefits of ''filling the gap'' and would discourage the use of impact technologies that may result in CRSs that enhance side impact energy management. Britax stated that this would serve the contrary purpose of enabling CRS with less energy management features to compare favorably with products that provide otherwise.

Graco also recommended using a constant CRS centerline position, as proposed, regardless of the CRS base width. Graco requested NHTSA consider adding a recommended method for confirming that the CRS is centered, such as a visual indicator on the sliding seat to which the CRS can be aligned, to increase repeatability of the test.

As discussed in a previous section, JPMA pointed out that there is an inconsistency between the NPRM's specification for the door foam thickness (51 mm) and the NHTSA drawing package specification (55 mm). JPMA states that this difference in foam thickness specification is significant because ''the NPRM includes set-up distances from the face of the door panel to the face of honeycomb material and from the face of the honeycomb material to the centerline of the sliding seat [sic].'' JPMA explained that the thickness of the foam is thus an important part of these set-up relationships and needs to be the same in the final rule and the drawing package to help ensure consistent test results between test facilities.

Agency Response

NHTSA believes that having a fixed distance from the front face of the armrest to the edge of the seat towards the seat orientation reference line (SORL)[216] is the appropriate configuration to test CRSs in a side impact. First, NHTSA believes that having a fixed distance at the time of impact is more representative of the real-world vehicle environment than using a varying distance. All CRSs will not be impacted by the door at the same time, as vehicle designs vary and a wider CRS will be impacted by the side door before a narrow CRS in the same vehicle. Maintaining a fixed position of the armrest with respect to the edge of the sliding seat at the time of initial impact of the door assembly with the sliding seat will encourage manufacturers to take into account the width of their safety seats in designing countermeasures to meet FMVSS No. 213a, as the door will impact wider CRSs at a higher velocity than narrower CRSs in the test, as it will in the real world.

Second, a fixed distance works well in a representative generic vehicle environment like the SISA. The FMVSS

[214] NHTSA–2014–0012–0045, at pg. 6.

[215] NHTSA understands this comment to be stating, in this context, narrower CRSs would be in contact (couple) with the door/armrest at a lower velocity than a wider one, as a wider one will come in contact with the door/armrest sooner. While CRS to door/armrest contact is happening, the velocity is decreasing so the velocity that a narrower CRS experiences is lower than a wide one.

[216] Seat orientation reference line means the horizontal line through Point Z as illustrated in Figure 1 of the regulatory text section of this final rule.

No. 213 frontal impact sled test also uses a representative generic vehicle environment for the test, and fixed distances are used to assess the performance of the CRS in the frontal impact. In the frontal test, the head and knee excursion limits are fixed with respect to references on the frontal standard seat assembly regardless of the initial head and knee position of the dummy. Fixing the excursion limits presents a simplified test environment in which CRS manufacturers can design thinner, thicker, or backless products that position the head and knee of the test dummies at different fore/aft positions and use countermeasures appropriate for their CRS to retain the head and knees within the test envelop. Some CRSs will position the head and knee closer to the excursion limits, others might choose to design a thinner back to position the head and knees further away. The fixed excursion limit does not vary with respect to the different CRS design and provides certainty in the parameters of the test environment. On the SISA, the fixed distance will provide manufacturers the ability to decide whether to make narrow CRSs so they are tested at a slightly lower speed or wider by adding different energy absorbing technologies of their choice. Similarly, the window sill height of the SISA, which represents a generic vehicle in the fleet, is fixed and does not change based on the head position of the child dummy in a particular CRS. CRS manufacturers may optimize their design that work best with their side impact technologies.

As Dorel commented, both methods (fixed versus variable distance) have different challenges and difficulties in setup. NHTSA believes that varying the distance between the armrest and the edge of the sliding seat would introduce more variability into the system as the door fixture or the anchorage locations would have to be movable to achieve a variable armrest/edge of sliding seat distance to achieve a CRS to door impact at the same time in all CRSs. Thus, the reduced risk of variability is an advantage of the fixed distance approach over the alternative.

Graco requested NHTSA consider adding a recommended method for confirming that the CRS is centered to increase test repeatability. As described further in the report *FMVSS No. 213 Side Impact Test Evaluation and Revision,*[217] NHTSA used FARO arm measurements in its sled tests to record and align the CRS and dummy with the SISA's SORL. The agency's OVSC compliance test procedure will provide the method that NHTSA will use to center the CRS in the SISA for compliance testing.

JPMA pointed out that because of the inconsistency between the door and arm rest foam thicknesses specifications in the drawing package and the specifications in the NPRM,[218] the set-up distance from the face of the door panel to the face of honeycomb material is also inconsistent from that specified in the NPRM. The NPRM specified that the distance of the front face of the armrest on the door from the edge of the bench seat at the time of contact of the door assembly with the sliding seat of the side impact seat assembly (T_0) (or setup distance for this discussion) is 32 mm. We agree that the 32 mm setup distance proposed in the NPRM regulatory text is incorrect because it was computed using the manufacturer quoted nominal door foam thickness and not the measured thickness (discussed in a previous section of this final rule preamble). The correct setup distance computed using the measured foam thickness is 38 mm.

NHTSA conducted side impact tests on the SISA to determine the effect of variability in the setup distance on the performance measures. NHTSA tested two CRS models (one in forward-facing configuration and the other in rear-facing configuration) on the SISA using 3 different setup distances. Table 22 shows that even with 12 to 14 mm variation in the setup distance the CV values of the performance measures are very low and in the ''excellent'' repeatability range. These results suggest that 12 to 14 mm variation in the setup distance does not have significant effect on the performance measures.

TABLE 22—TEST RESULTS FOR EVALUATING THE EFFECT OF VARIATION IN THE DISTANCE BETWEEN THE FRONT FACE OF THE ARMREST TO THE FRONT FACE OF THE HONEYCOMB

Test No.	ATD	CRS	Orientation	Restraint type	Setup distance [mm]	HIC 15	Chest deflection [mm]
10285	Q3s	Graco Size4Me 65.	RF Convertible	LA Only	37	751	20.7
10116					33	778	23.5
10286					47	754	23.3
					Average	761.2	22.53
					STD Dev	12.25	1.27
					CV %	2	6
10277	Q3s	Evenflo Tribute.	FF Convertible	CRAS	34	712	21.3
10101					42	760	20.8
10278					46	732	22.0
					Average	734.5	21.4
					STD Dev	19.9	0.48
					CV %	3	2

Note: *CRAS* means the full child restraint anchorage system, *LA Only* means lower anchorages of the child restraint anchorage system, and *FF* means forward-facing.

Based on these test results, the agency is revising the tolerance for the setup distance from ±2 mm to ±6 mm. Therefore, this final rule revises the specified distance of the front face of the armrest on the door from the edge of the bench seat at the time of contact of the door assembly with the sliding seat (T_0) to 38 ± 6 mm. This measurement is consistent with the final drawing package and addresses the errors in the NPRM and proposed drawing package.

[217] Louden & Wietholter (2022).

[218] This issue of the discrepancy in the door and armrest foam thickness is discussed previously in the preamble in the section on door characteristics.

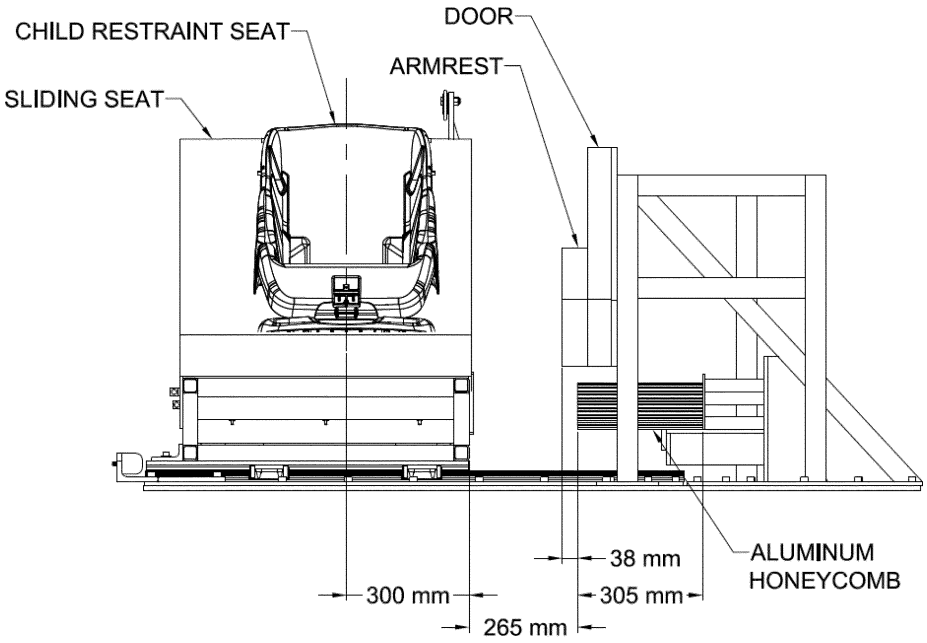

Figure 11. Front View of SISA

e. Dummy Positioning

Arm Placement

NHTSA performed a series of tests for the NPRM to evaluate CRS performance with the Q3s dummy, as discussed below. In the tests, NHTSA observed, with regard to dummy positioning, that chest displacements of the Q3s, tested in the same CRS model, were higher when the dummy's arm was positioned in line with the thorax than when the arm was rotated upward so as to expose the thorax to direct contact with the intruding door. NHTSA proposed an arm position at 25 degrees with respect to the thorax, and noted that the Q3s dummy's shoulder contains a detent to aid in this positioning. NHTSA requested comment on this arm position.

Comments Received

We received many comments supportive of arm positioning. Dorel supported the inclusion of an arm positioning specification, stating that it provides additional consistency of setup conditions for repeatability and reproducibility. Graco stated that it has determined that the IR–TRACC measurement (for chest deflection) can change significantly as a function of arm placement. Graco recommended improving the variation in the Q3s chest deflection measurements. It suggested that a large range (10 mm) it found in chest deflection was due to inconsistent arm placement, and that a more defined set-up practice may reduce these differences. Similarly, TRL commented that the pre-test position of the arm can have a significant effect on the dummy chest deflection readings, and that care should be taken to install the dummy as described in the installation procedure of Standard No. 213a to ensure consistent test results. Advocates stated that the agency should establish an arm position which correlates best with the real-world positioning of children in CRS and injury frequencies observed in available crash data.

Agency Response

The final test procedure specifies that each of the dummy's arms be rotated downwards in the plane parallel to the dummy's midsagittal plane until the arm is engaged on the detent that positions the arm at a 25 degree angle with respect to the thorax, as proposed in the NPRM. This final rule specifies that the agency will position the lower portion of the Q3s arm to be as aligned as possible to the upper arm (25-degrees) that is determined by the detent. If there is interference of the arm with the CRS or dummy body, the lower arm can be slightly bent. VRTC achieved good repeatability with this test procedure it developed.[219]

In response to Advocates, NHTSA is not aware of data that correlates arm position with injury data. However, we believe the arm in the down position would not be an unrealistic positioning of the arm.

Leg Placement

In the NPRM, NHTSA noted that, when testing with the Q3s dummy in a rear-facing CRS, the legs of the dummy were extended upwards and rotated down until they were in contact with the SISA seat back. NHTSA requested comment on the position of the Q3s dummy legs when testing rear-facing CRSs with that dummy.

Comment Received

Graco requested that NHTSA specify whether to remove the knee stop bolts when using the Q3s in a rear-facing seat. It explained that currently, testing practices vary between test facilities and should be standardized for consistency. Graco stated no structural damage occurred in its tests when it did not remove the knee stop.

Agency Response

NHTSA will not remove the knee stop bolts when using the Q3s dummy in a rear-facing seat. In the November 2, 2020 NPRM to update the frontal sled test in FMVSS No. 213, NHTSA proposed a procedure calling for the removal of the knee stop in the Hybrid III (HIII) 3-year-old dummy when used in rear-facing CRSs. In tests of rear-facing CRSs with the HIII–3-year-old dummy, the stiff seated pelvis of the dummy causes the dummy's legs to brace against the seat back, resulting in a forward load on the CRS that could

[219] *See* Louden & Wietholter (2022) for more details.

push the CRS forward. The agency sought to remove the knee-stops to prevent such bracing of the HIII–3-year-old dummy's legs against the seat back.

In contrast, the Q3s dummy has more flexibility in the pelvic joint than the HIII dummy, which allows the positioning of the legs of the Q3s without the removal of the knee stop. This final rule specifies that each of the dummy's legs be rotated downwards in the plane parallel to the dummy's midsagittal plane until the limb contacts a surface of the child restraint or the SISA. f. Dummy selection

The January 2014 NPRM proposed using the Q3s dummy and the CRABI 12-month-old dummy to test CRSs under the side impact requirements. Specifically, the NPRM proposed using the Q3s to test CRSs designed for children weighing 10 kg to 18.1 kg (22 lb to 40 lb), and using the CRABI 12-month-old to test CRSs designed for children weighing up to 10 kg (22 lb). These weight categories were designed to be consistent with the criteria used in the current FMVSS No. 213 in determining the test dummies that are used to test child restraints to the standard's frontal test requirements.

In NHTSA's November 2, 2020 NPRM proposing updates to FMVSS No. 213, NHTSA proposed changes to those criteria.[220] The November 2020 NPRM proposed that the Hybrid III 3-year-old test dummy used in FMVSS No. 213 would only be used to test CRSs designed for children weighing 13.6 to 18.1 kg (30–40 lb), and that the 12-month-old CRABI would be used to test CRSs designed for children weighing up to 13.6 kg (30 lb). The agency proposed the change after tentatively concluding that the 3-year-old dummy does not adequately fit CRSs rated for children weighing 10 kg to 13.6 kg (22 to 30 lb), and does not properly represent the children for whom the restraints are intended. The November 2020 frontal upgrade NPRM noted that the 2014 side impact NPRM sought to align the weight cut offs for dummy selection with that of FMVSS No. 213. The November 2020 NPRM requested comment on using the Q3s 3-year-old dummy to test CRSs designed for children weighing 13.6 to 18.1 kg (30–40 lb) in the side impact test and using the CRABI–12MO to test CRSs designed for children weighing up to 13.6 kg (30 lb).[221]

Comments Received

In response to the 2014 side impact NPRM, CU commented that, based on its understanding of the proposed rule (specifically S7.1(b) of proposed FMVSS No. 213a), the agency would use the Q3s to test infant seats. CU disagreed with this proposal, stating that evaluating the side impact performance of infant seats using the Q3s dummy is likely to misrepresent those seats' protective features, as the Q3s is technically too tall for those seats. CU was concerned that, with the dummy's head extended far above the seat's shell, side impact protection within the shell will not ''register'' in the dummy's measured head dynamics. Based on its limited tests, CU observed that the Q3s head exceeding the shell height may result in decreased HIC values, thereby ''overrating'' the seat's side impact protection. CU stated that this potential to achieve lower HIC numbers could influence manufacturers to ''design for the test'' rather than for real-world child and CRS interactions, which could have negative implications. For instance, manufacturers could reduce shell heights or containment attributes, which could improve side impact regulatory test results but potentially reduce performance in real-world crashes.

CU stated that NHTSA may not have seen this interaction issue with the Q3s and infant seats, as the test development results discussed in the NPRM indicated that the rear-facing seats tested with the Q3s were all convertible seats, not infant seats. Infant seats were only tested in NHTSA's tests with the CRABI 12-month-old dummy, even though the current child seat market includes infant seats that would meet the NPRM test thresholds requiring the Q3s (S7.1). The commenter did not believe the side impact pulse produces a level of energy that will result in a high number of structural failures and stated that, given the Q3s dummy size and limited potential for assessing structural failure, the Q3s dummy has little value for assessing side impact protection in infant seats. CU said that, in its own test methodology, it uses larger-weight dummies that may exceed shell accommodations to evaluate the structural integrity of seats, rather than injury metrics. CU believes an alternative side impact instrumented dummy should be considered for infant seat testing that would more appropriately represent real-world usage and provide biofidelic injury values.

Similarly, UPPAbaby recommended against using the Q3s dummy to test rear-facing infant seats, because, it stated, ''the head of the Q3s exceeds the limit to which we recommend a child be positioned in our seat.''

Comments to the November 2, 2020 frontal upgrade NPRM supported the proposed dummy selection weight and height criteria and the alignment of the applicable dummy selection for both frontal and side impact tests. Four commenters (IMMI, Salem-Keiser, Graco and Volvo) supported the proposed dummy selection changes. Two commenters (Safe Ride News and Graco) expressed support for having the same dummy selection criteria in both standards. Consumer Reports[222] (CR) reiterated its comment to the side impact NPRM (summarized above) where it argued that the CRABI–12 MO should be used to evaluate infant CRSs with recommended weights over 30 pounds as the 3-year-old dummies are too big for these CRSs.

Agency Response

To better align the dummy selection for the side impact test with the size and weight of children typically restrained in the CRS, this final rule adopts the use of the CRABI–12-month-old to test CRSs designed for children weighing up to 13.6 kg (30 lb) and that of the Q3s (3-year-old dummy) to test CRSs designed for children weighing 13.6 to 18.1 kg (30 to 40 lb). These specifications are aligned with the proposed ranges for the FMVSS No. 213 frontal impact test in the November 2, 2020 NPRM. Table 23 below shows the ATD use adopted for the side impact test based on the child weight and height recommendation for the CRS.

TABLE 23—AMENDMENTS TO ATD USE BASED ON MANUFACTURER'S WEIGHT AND HEIGHT RECOMMENDATIONS

[Adopted by this final rule]

CRS recommended for use by children of these weights and heights—	Are compliance tested by NHTSA with these ATDs (subparts refer to 49 CFR part 572)
5 kg (11 lb) to 13.6 kg (30 lb) in weight; 650 mm (25.5 inches) to 870 mm (34.3 inches) in height.	CRABI–12-Month-Old (subpart R).

[220] 85 FR 69388, *supra.* See Section IX, 85 FR 69429.

[221] 85 FR at 69436.

[222] Consumer Union is the Policy and Action Division of Consumer Reports.

TABLE 23—AMENDMENTS TO ATD USE BASED ON MANUFACTURER'S WEIGHT AND HEIGHT RECOMMENDATIONS—Continued

[Adopted by this final rule]

CRS recommended for use by children of these weights and heights—	Are compliance tested by NHTSA with these ATDs (subparts refer to 49 CFR part 572)
Weight 13.6 kg (30 lb) to 18.1 kg (40 lb); Height 870 mm (34.3 inches) to 1100 mm (43.3 inches).	Q3s 3-Year-Old Child Dummy (subpart W).

The changes in weight and height dummy selection criteria address Consumers Union (Consumer Reports) and UPPAbaby's concerns that testing infant seats with the Q3s dummy would position the dummy's head higher than the manufacturer's recommended use of the restraint. In the November 2, 2020 frontal upgrade NPRM, NHTSA explained that the current CRS market encompasses infant carrier models recommended for children weighing up to 10 kg (22 lb), 13.6 kg (30 lb), 15.8 kg (35 lb), and 18.1 kg (40 lb) and with child height limits ranging from 736 mm (29 inches) to 889 mm (35 inches). Under current FMVSS No. 213 and the FMVSS No. 213a NPRM, these infant carriers would be subject to testing with the HIII–3-year-old or Q3s (35 lb) dummy. However, as commenters have pointed out, the HIII–3-year-old or the Q3s dummy do not fit easily in infant carriers and have limitations as test devices to evaluate the restraints.

Given the purpose of infant carriers, NHTSA concludes there is not a safety need warranting a redesign to accommodate a 3-year-old dummy. Current infant carriers are convenient to use with infants and are popular with parents and other caregivers. The availability and ease-of-use of current carriers may result in more infants riding restrained, and rear-facing, than if the carriers were heavier, bulkier and more expensive. NHTSA does not believe that the infant carriers are used frequently for children weighing more than 13.6 kg (30 lb). Information from child passenger safety technicians involved in child restraint system checks indicates that infants usually outgrow infant carriers because of reaching the height limit of the carrier, rather than the weight limit. Further, as an infant reaches a 13.6 kg (30 lb) weight,[223] the combined weight of the infant and the infant carrier becomes too heavy for a caregiver to pull out of the vehicle easily and carry around by a handle. Therefore, caregivers typically switch to a convertible or all-in one CRS as the child weight increases. A 13.6 kg (30 lb) maximum weight threshold for infant carriers would accommodate all 1-year-old children (the average 97th percentile 1-year-old weighs 27.2 lb (12.3 kg)).

The changes on dummy selection criteria would still allow a manufacturer to continue marketing its infant carrier for children weighing more than 13.6 kg (30 lb), but we anticipate manufacturers will not exceed the 13.6 kg (30 lb) weight threshold. Practically speaking, children weighing more than 30 lb[224] would be too old (no longer an infant), heavy and tall to easily fit an infant carrier. Nonetheless, if an infant carrier were recommended for children weighing more than 13.6 kg (30 lb), NHTSA would test it with the 3-year-old child dummy, and the manufacturer would be required to certify that the CRS can meet the performance requirements of the FMVSS when tested with the 3-year-old dummy.

g. Miscellaneous Comments on the Test Procedure, Including Test Setup, Sled Instrumentation, and Data Processing

For the NPRM, NHTSA placed a technical report, ''Child Restraint Side Impact Test Procedure Development'' (2013), in the docket which detailed NHTSA's testing with regards to the sled test. MGA and Graco provided feedback on or requested clarification of different aspects of the proposed test procedure.[225]

High-Speed Camera Views

MGA was concerned that no high-speed camera views were specified in FMVSS No. 213a. MGA stated that off-board cameras will require fewer structural elements to hold the cameras in place, which would aid in the ease of construction for new equipment. In response, NHTSA is providing guidance for use of high-speed cameras. NHTSA's technical report, ''FMVSS No. 213 Side Impact Test Evaluation and Revision,'' [226] details VRTC's high-speed camera views that it used in the development of the test protocol.[227] The compliance test procedures developed by NHTSA's Office of Vehicle Safety Compliance (OVSC) will describe the camera positions that OVSC will use in its testing, which test facilities can use in developing their FMVSS No. 213a test protocols.

Belt Tension

MGA commented that the internal harness tension in FMVSS No. 213a is specified as ''not less than 9 N,'' while in FMVSS No. 213 it is specified as ''Tighten the belts until a 9 N force applied to the webbing at the top of each dummy shoulder and to the pelvic webbing 50 mm on either side of the torso midsagittal plane pulls the webbing 7 mm from the dummy.''

NHTSA concurs that FMVSS No. 213a should specify an upper limit for tensioning internal harnesses, to have consistency in testing. Therefore, NHTSA is also including an upper limit to this internal harness tension. This final rule adopts a provision in FMVSS No. 213a that specifies the internal harness tension as ''not less than 9 N but not more than 18 N.'' This wording would be consistent with the FMVSS No. 213 instruction discussed in the November 2, 2020 NPRM.

MGA also commented that, according to FMVSS No. 213a, booster seats would be tested with a Type 2 seat belt assembly that has the lap belt tensioned

[223] An average 97th percentile 1-year-old is 12.3 kg (27.2 lb).

[224] An average 97th percentile 2-year-old is 15.3 kg (33.9 lb).

[225] The test procedure set forth in FMVSS No. 213a describes the procedure NHTSA will use to conduct its compliance test. NHTSA's Office of Vehicle Safety Compliance (OVSC) issues a Test Procedure (TP) that provides more detailed information to its contractors about running the compliance test. However, under the Safety Act, manufacturers self-certify the compliance of their vehicles and equipment with all applicable FMVSSs; they are not required by NHTSA to conduct the test described in the FMVSS or TP to certify the compliance of their products with the FMVSS. Instead, manufacturers must ensure that, when NHTSA conducts the test described in the standard and TP, the vehicle or equipment will meet the requirements in the standards. While not required to do so, manufacturers generally self-certify their products by using the test procedures set forth in the FMVSSs and TPs. This is because running the same test better ensures that the vehicle or equipment will perform in a manner that meets the FMVSSs requirements when tested by NHTSA, compared to a different test the manufacturer had used to make the certification.

[226] Louden & Wietholter (2022), *supra.*

[227] VRTC's onboard camera fixtures are not part of the drawing package, as test facilities are not required to use cameras. If they use cameras, they may choose to use onboard or off-board cameras with the same views (or any other position of their choosing).

to 12 to 15 lb. MGA stated that the current FMVSS No. 213 requires a tension of 2 to 4 lb in both the lap and shoulder belt portion of the assembly. MGA suggested that for FMVSS No. 213a, this tension is revised to be a constant 2 to 4 lb. NHTSA agrees with MGA's suggestion. NHTSA had updated the lap belt tensions when installing booster seats in a 2012 final rule (77 FR 11625) to 2 to 4 lb but had inadvertently used the previous specification of 12 to 15 lb in the NPRM preceding this final rule. We believe the belt tension should be consistent with the current practices, and, therefore, we revised the tension accordingly.[228]

Instrumentation and Data Collection

With regards to instrumentation and data collection, MGA commented that the NPRM materials specify both integrated accelerometer readings and a velocity trap for producing relative velocity readings between the sliding seat and intruding door. MGA asked which of these is considered the primary means of measurement, and which one is considered secondary.

In response, because of modifications to the test buck design, NHTSA has removed the velocity trap. The integration of accelerometers is the primary source for relative velocity readings, as described in more detail in the technical report, ''FMVSS No. 213 Side Impact Test Evaluation and Revision.'' [229]

MGA also requested additional clarification with regards to the measurement of the acceleration and velocity of the intruding door. MGA asked, since the intruding door and sliding seat assembly are moving at a 10-degree angle, can a traditional sled carriage accelerometer (mounted at 0 degrees on the sled carriage frame) be used to measure the intruding door acceleration, or does it need to be mounted at a 10-degree angle? MGA also asked if this accelerometer should be mounted near the CG of the sled platform or on the intruding door.

In response, the acceleration of the intruding door and the sliding seat perpendicular to the ''seat orientation reference line'' (SORL) [230] of the sliding seat is used to determine the relative velocity between the door assembly and the sliding seat. If the accelerometer is mounted at 0-degrees on the sled carriage frame, the acceleration measured is multiplied by cosine (10-degrees) to obtain the acceleration perpendicular to the SORL of the sliding seat. The report, ''FMVSS No. 213 Side Impact Test Evaluation and Revision,'' *supra,* details these calculations. The drawing package for the SISA, found in the docket for this final rule, provides information on the location of the accelerometers on the sled carriage with the door assembly and on the sliding seat.

Also with regard to the accelerometers, MGA commented that dampened accelerometers are a good choice to read the sliding seat acceleration and velocity due to excessive vibration caused from impact with the honeycomb. However, MGA stated that SAE J211 (regarding instrumentation for impact tests, discussed further below) does not have provisions for dampened accelerometers. MGA stated that NHTSA will need to specify a dampening ratio, as the accelerometers used for NHTSA research have a different dampening ratio than the accelerometers used in MGA evaluation testing. MGA asked how the data would be processed for the dampened accelerometer, and would a CFC60 be used for acceleration data and CFC180 for velocity data like for traditional sled accelerometers? MGA also asked if there was a specific location on the sliding seat where the accelerometer should be located.

In response, NHTSA has updated the SISA, as discussed above, which has reduced excessive vibrations, and therefore dampened accelerometers are not used. The locations of the non-dampened accelerometers can be found in the final drawing package and the ''FMVSS No. 213 Side Impact Test Evaluation and Revision'' report.[231]

Updating references to SAE Recommended Practice J211. The November 2014 NPRM on FMVSS No. 213a proposed to reference SAE Recommended Practice J211, ''Instrumentation for Impact Test,'' revised in June 1980, and proposed that all instrumentation and data reduction conform to J211 (1980). The reference to the June 1980 version was consistent with the current test specifications of FMVSS No. 213. MGA expressed concern over the use of J211 from 1980. MGA stated that J211 is a very commonly used test standard and is updated frequently, and that the it has been updated numerous times since 1980. MGA suggested incorporating J211 from 2014 to reflect the latest revision.

In the November 2, 2020 proposed frontal upgrade NPRM, *supra,* NHTSA proposed updating the reference to SAE Recommended Practice J211(1980) to SAE Recommended Practice J211/1 (1995). The 1995 version was proposed because FMVSS No. 208, ''Occupant crash protection,'' currently refers to the 1995 revision, and the 1995 version of SAE J211/1 is consistent with the current requirements for instrumentation and data processing in FMVSS No. 213. FMVSS No. 208 was important to this decision because its specifications are used in Standard No. 213 regarding testing of built-in child restraint systems. Standard No. 213 has a procedure in which the agency can test a built-in child restraint using an FMVSS No. 208 full vehicle crash test. Accordingly, using the same Recommended Practice J211/1 (1995) in FMVSS No. 213 facilitates the processing of test results when combining a test of built-in child restraints with an FMVSS No. 208 test.

In this final rule, NHTSA has decided to update the reference to SAE Recommended Practice J211/1 (1995) to keep consistency between FMVSS No. 213 and 213a. NHTSA is not adopting the 2014 version of J211 because Standard No. 208 uses the 1995 version, and consistency between FMVSS No. 208 and FMVSS No. 213 is important for testing built-in child restraints.

Measuring Head Contact of the CRABI

MGA suggested that additional wording would be helpful for measuring the 12-month-old CRABI dummy head contact criterion pass/fail event. MGA stated that common testing practices include chalk or paint on the ATD head or door, or a conductive contact tape with a recorded signal. MGA added that paint and chalk are a relatively inexpensive and accurate way to look at the marks left during the test, but can produce error if not carefully applied. The commenter recommended that a test procedure with a common way of marking should be developed. MGA also stated that contact tape provides a more definitive event but has drawbacks including complexity in setup, and a chance for losing data since it is a recorded signal.

[228] NHTSA does not anticipate booster seats will be produced that are subject to FMVSS No. 213a. First, NHTSA has proposed a requirement that boosters must be labeled as not suitable for children weighing less than 18.1 kg (40 lb) (85 FR 69388, *supra*). Second, even in the absence of the proposed prohibition on labeling boosters for children under 40 lb, it is unlikely booster seats can meet the requirements of FMVSS No. 213a, so manufacturers will likely label them to fall outside of the applicability of the side impact standard.

[229] Louden & Wietholter (2022).

[230] Seat orientation reference line means ''the horizontal line through Point Z as illustrated in Figure 1A'' of FMVSS No. 213. 49 CFR 571.213, S4 Definitions.

[231] Louden & Wietholter (2022).

Graco's comment described 42 sled tests, conducted in different labs, using the 12-month-old CRABI dummy to measure head contact with the door structure. Graco's results showed that only one of the six CRSs evaluated produced conflicting head contact performance across the different test facilities. Graco provided video stills to show the non-repeatable head contact result at the different test facilities, where the camera angle made determination of head contact difficult. Graco suggested that the use of common camera angles and non-video contact methods may help confirm whether contact has occurred. Graco added that the common camera view it would recommend is a top view, approximately 3 feet above the door sill, and that this worked well for both forward- and rear-facing tests and could allow for a consistent determination of the head position from the door foam.

Graco also commented on the non-video options considered in the NPRM, stating that with the contact paint there is possible confusion in determining if paint corresponds to the current test or a previous test. Graco also expressed concern with instrumented contact tape, as the commenter believed that method has not been proven to be repeatable. Graco stated that further development of these options could allow for a more concrete determination beyond video analysis only.

In response to these comments, NHTSA tested several methods to evaluate head containment to address commenters' concerns about different test methodologies. The methodologies included:

- *Wire mesh with foil contact tape.* This method consists of wrapping the CRABI 12–MO dummy's head in a copper wire mesh sleeve and metal foil contact tape applied to the door with double sided duct tape to ensure adhesion to the door as CRS impacts into it. A 1 Volt Voltage is applied to the foil contact tape causing a short circuit when the copper wire mesh makes contact. This results in a Voltage vs. Time plot.
- *Camera View.* Camera coverage is aligned with the edge of the wall to visually witness head to door contact. For forward-facing CRSs NHTSA used a front tight view of the head and door area, and for rear-facing CRSs a tight view from the rear of the seat assembly. The camera placement used during NHTSA's testing is detailed in OVSC's test procedures so that test facilities can replicate the same camera views.
- *Grease Paint.* Grease paint was used on the dummy's head to detect head-to-door contact by paint transfer to the door.

To share information and possibly further the enhancement of test protocols in the future, NHTSA discusses the agency's experience with these tests in the ''FMVSS No. 213 Side Impact Test Evaluation and Revision'' report.[232] Each method has its strengths and limits. Mesh and contact tape may have set up or equipment failures, and camera views do not always capture the head-to-door contact even when aligned to the door, as some CRSs require a carry-handle to be used in its ''carrying'' position, which blocks the view of the head and the door. Alternatively, grease paint is sometimes transferred with very light touches. NHTSA's compliance TP will describe how NHTSA/OVSC instructs its contractors to conduct and evaluate head contact in compliance testing. However, NHTSA reiterates it is each manufacturer's responsibility to certify the compliance of its CRSs with FMVSS No. 213a, and that manufacturers may use means or tools other than those described in the report or the OVSC TP to determine whether there was dummy head contact.

h. Additional Changes

- Section 9.2(c) of the proposed regulatory text referred to a 178 Newton (N) force that would be applied to the dummy's crotch and thorax using a flat square surface with an area of 2,580 square millimeters. In the final rule, this step has been changed, as applying this force to the Q3s dummy may inadvertently cause the dummy's skin to get tucked in the pelvis.
- Section 6.1.2 (a)(1) of the proposed rule indicated a tension for the tether as not less than 53.5 N and not more than 67 N. During the tests of the FMVSS No. 213 frontal upgrade program (which uses the same seat assembly design as this final rule for side impact), NHTSA found that in some cases the tethers could not be tightened to the proposed tension range because the seat assembly has a thinner seat back cushion (2 inches) than the current FMVSS No. 213 seat. This final rule adopts a tension range of not less than 45 N and not more than 53.5 N. This lower range in tension values for the tether are based on tether tensions achieved in the tests conducted at VRTC and therefore are practicable.
- The application section (S3) was changed to clarify, but not change, its meaning. The revised wording is as follows:

S3. *Application.* This standard applies to add-on child restraint systems that are either recommended for use by children in a weight range that includes weights up to 18 kilograms (40 pounds) *regardless of height,* or by children in a height range that includes heights up to 1100 millimeters *regardless of weight,* except for car beds and harnesses.

- S5(a) and S6.1.1(e) were slightly reworded to make clearer that each child restraint system is required to meet the performance requirements at each of the restraint's seat back angle adjustment positions and restraint belt routing positions, in both the forward and rearward facing installation, as recommended by the manufacturer's instructions.
- Added Section 5.1.6 to indicate the means of installation for which child restraint systems are required to meet the requirements, which include the Type II, Type II plus tether, Lower anchorages, and Lower anchorages plus tether as applicable to the different CRS types.
- S6.1.1(a)(2)(c) was slightly edited to include the word ''any'' in the requirement before the words pulse and velocity. Here and elsewhere, the word any, used in connection with a range of values or set of items in the requirements, conditions, and procedures of the standard, means the totality of the items or values, any one of which may be selected by the Administration for testing, except where clearly specified otherwise. See Section 571.4.
- Sections 6.1.2(a)(1) through (3) were slightly edited for clarity stating that no supplemental devices are used to install the CRS when testing to FMVSS No. 213a. In addition, section 5.1.6 was added to specify that CRSs must meet the requirements of the standard when installed solely by each of the listed installation methods. These changes are consistent with FMVSS No. 213 where CRSs are required to meet the standard solely by the installation methods in S5.3.2 and that no supplemental devices (*i.e.* load leg) will not be used.
- S7.1 and S6.1.2(b) wording was slightly modified to be consistent with S7.1 (a) and (b).

VIII. Performance Requirements

NHTSA proposed using the Q3s and CRABI 12-month-old test dummies to test the conformance of CRSs to the side impact requirements. With the Q3s, we proposed to require CRSs to meet performance requirements such that the head injury criterion (HIC) over a 15 millisecond (ms) timeframe was less than 570, and the chest displacement injury assessment reference value (IARV) was less than 23 mm. With the CRABI 12-month-old, we proposed to measure whether there was head-to-

[232] Louden & Wietholter (2022).

door contact only, as the CRABI 12-month-old is a frontal test dummy and was not developed to provide accurate data about the severity of injuries in side impacts.

NHTSA is finalizing a test procedure that utilizes the Q3s and the CRABI 12-month-old dummies and the proposed injury and other performance criteria. After careful consideration of the comments and other information, including data from additional testing with the Q3s, NHTSA determined that the Q3s effectively replicates a child in a side impact and provides a reliable assessment of injury measures in the side impact environment. In addition, although there is currently no infant-sized dummy available specifically for side impact testing, NHTSA concludes that the CRABI 12-month-old is a suitable instrument for assessing the ability of a CRS to prevent head-to-door contact and is an acceptable tool for evaluating important aspects of CRS performance in side crashes.

a. Q3s

The Q3s is built on the platform of the standard Q3 dummy series (the Q-series are frontal ATDs used in Europe), but the Q3s has enhanced lateral biofidelity, durability, and additional instrumentation for specialized use in side impact testing.[233] [234] For instrumentation, the Q3s has three uni-axial accelerometers at the head center of gravity (CG) and an InfraRed Telescoping Rod for Assessment of Chest Compression (IR–TRACC) [235] in the thorax for measuring lateral chest deflection. The Q3s also has a deformable shoulder with shoulder deflection measurement capabilities, arms with improved flesh characteristics, a laterally compliant chest, and a pelvis with improved upper leg flesh, floating hip cups, and a pubic load transducer.[236] Specifications for the Q3s were adopted into NHTSA's regulation for anthropomorphic test devices (49 CFR part 572) on November 3, 2020 (85 FR 69898).[237]

NHTSA cited several reasons in the 2014 NPRM for selecting the Q3s for testing in the side impact test procedure, including the ATD's commercial availability, its enhanced biofidelity and instrumentation capabilities, and its durability. The injury criteria proposed for use with the Q3s dummy included a maximum HIC value of 570 measured in a 15 ms timeframe and a chest displacement IARV of 23 mm. NHTSA did not believe there was reason to propose a performance criterion for testing with the Q3s that would prohibit head contact with the intruding door, because testing in development of the NPRM demonstrated that peak HIC values occurred prior to the head contacting the intruding door. In other words, the risk of head injury from head-to-door contact was lower than the risk from peak acceleration, so measuring the peak HIC value from head-to-door contact would not further the assessment of compliance.

Comments on the proposed use of the Q3s were mixed, with some commenters expressing concerns about dummy sourcing and biofidelity, and other commenters supporting the use of the Q3s. NHTSA received some comments in support of the proposed performance requirements for the Q3s, but none on the specific HIC or chest deflection values proposed in the NPRM. Many commenters requested that the agency include a head containment requirement for the Q3s. As discussed below in this section, this final rule adopts the use of the Q3s dummy in the FMVSS No. 213a side impact test, along with the performance criteria proposed in the NPRM. The agency's November 3, 2020, final rule incorporating the Q3s test dummy into 49 CFR part 572, discusses technical details about the Q3s.

1. Q3s Sourcing

As discussed in the November 3, 2020 final rule and further below, the sourcing and biofidelity issues associated with the Q3s have been addressed. Humanetics Innovative Solutions Inc. (HIS), the ATD supplier, only had minor drawing corrections to the November 3, 2020 final rule adopting the Q3s, and these corrections have been adopted in the November 22, 2021 final rule responding to the petition for reconsideration. With the final corrections adopted, NHTSA is confident that HIS will be able to deliver the Q3s within specification. When NHTSA published its 2013 NPRM proposing to incorporate the Q3s test dummy into 49 CFR part 572 (78 FR 69944; November 21, 2013), the Q3s was a proprietary product owned by HIS, and HIS was the only source from which to obtain the Q3s. By mid-2014, after the publication of the FMVSS No. 213a side impact NPRM, HIS began delivering Q3s dummies to end-users that included NHTSA, CRS manufacturers, and testing laboratories. NHTSA reopened the side impact protection NPRM comment period in mid-2014 to allow stakeholders to familiarize themselves with the Q3s, test CRSs with the ATD, and provide NHTSA with feedback in another round of comments.

In a comment, Dorel expressed concern with the dummy being available from only one source (HIS), and that the dummy could be subject to patents in whole or part, thus potentially subjecting Dorel and the CRS industry to unregulated and unbound prices. Dorel stated that one source and supply with no competition in an open market can lead to potential service, supply, and quality problems potentially interrupting timely certification and delivery of CRS products to customers. Dorel commented that allowing the continued use of the Hybrid III dummy as an option may temporarily alleviate this concern, but that in the long run, the lack of competition in dummy supply is a serious issue for the manufacturers and the entire CRS community.

In response, NHTSA makes clear that, while single source restrictions were in place during the NPRM stages (HIS retained rights to manufacture the dummy), the Q3s dummy drawings and designs are now free of any restrictions, including restrictions on their use in fabrication and in building computer simulation models of the dummy.[238]

2. Biofidelity

Dorel commented on the difficulties it had with the Q3s dummy in its final development phase in areas of construction, materials, manufacture, and qualification. Dorel believed that many aspects of the dummy were not

[233] The anthropometry of the Q3 (and the side impact adaptation Q3s) is based on the Child Anthropometry Database (CANDAT) for a 3-year-old child compiled by the Netherlands Organization for Applied Scientific Research (TNO). CANDAT includes various characteristic dimensions and weights of children of different ages obtained from different regions in the world including United States, Europe, and Japan.

[234] NHTSA evaluated the Q3 dummy and found that the Q3 dummy did not have adequate biofidelity in lateral impact, in contrast to the Q3s dummy, which was designed for side impacts.

[235] The IR–TRACC is a deformation measurement tool that consists of an infrared LED emitter and an infrared phototransistor detector. The emitter and detector are enclosed at each end of a telescoping tube. The chest deformation is determined from the irradiance measured by the detector, which is inversely proportional to the distance of the detector from the emitter.

[236] Carlson, M., Burleigh, M., Barnes, A., Waagmeester, K., van Ratingen, M. ''Q3s 3 Year Old Side Impact Dummy Development,'' 20th International Conference on the Enhanced Safety of Vehicles, Paper No. 07–0205, 2007. *http://www-nrd.nhtsa.dot.gov/pdf/esv/esv20/07-0205-O.pdf.* Last accessed on June 11, 2012.

[237] A few specifications were corrected in a response to a petition for reconsideration. 86 FR 66214, November 22, 2021. The document corrected a few drawings in the drawing package for the dummy and some provisions in the user's manual.

[238] Q3s final rule, 85 FR 69898, 69899 (November 3, 2020).

yet finalized, such as the neck twist fixture design (Dorel said it was completed but still needs to be validated and is not ready for sale or purchase), and the Q3s calibration software. Dorel stated it was ready and willing to support the rulemaking process by providing data to help assess the repeatability and reproducibility of the dummy.

NHTSA has addressed these dummy design, qualification and biofidelity issues in the November 3, 2020 final rule incorporating the Q3s dummy into part 572. Since the final rule, HIS has been able to deliver Q3s dummies within specification and at the 49 CFR part 572 design level. That final rule also addresses the stiffness of the Q3s shoulder,[239] with NHTSA's test data demonstrating that the Q3s shoulder is biofidelic in the manner in which it will exert force on the CRS.

JPMA commented that HIC15 may not be the most appropriate measurement given the biofidelic limitations of the Q3s. JPMA explained that one member noted large variation in HIC measurements with the Q3s dummy in the proposed side impact test with relatively small changes in the test, which it believes is due in large part to the biofidelic limitations of the dummy. JPMA added that this member's previous comments on the NPRM for the Q3s dummy highlighted the impact the Q3s's shoulder stiffness could have on test results. JPMA stated that given the lack of biofidelity in this particular region of the Q3s dummy, HIC15 may not be the best or even most appropriate measure of side impact protection.

Agency Response

NHTSA's November 3, 2020 final rule addresses the stiffness of the Q3s shoulder,[240] with NHTSA's test data demonstrating that the Q3s shoulder is sufficiently biofidelic for the FMVSS No. 213a test. NHTSA explained in the final rule that, under conditions that correspond closest to the intended use of the Q3s in the proposed FMVSS No. 213 side impact test, the force response of the padded probe nearly matches the target. With magnitude of the force generated by the padded probe well within the envelope for a biofidelic response, these data show that the Q3s shoulder is biofidelic as to how it loads a CRS and how it responds to the external probe force. Thus, this loading of the child restraint, which would affect the overall motion of the dummy's upper torso and head (through which the FMVSS No. 213a injury criteria under consideration would be measured), is representative of an actual human. NHTSA concluded that the Q3s shoulder and how the ATD's shoulder, head and torso will interact when the dummy is restrained in a child restraint in the side impact test are sufficiently biofidelic.

In response to JPMA's concerns about the biofidelity of the Q3s based on HIC15 fluctuations at different speeds, NHTSA's study of repeatability and reproducibility (discussed further below) shows that the HIC15 fluctuations are within acceptable limits.[241]

3. Aspects of Testing With the Q3s

i. Reversibility

JPMA stated that the NPRM for the Q3s test dummy referred to the reversibility of the IR–TRACC and how it is to be configured, but the corresponding NPRM for the proposed side impact test did not provide for reversibility. JPMA added that some members reported testing of rear-facing CRSs at Calspan that was initially conducted with the IR–TRACC configured in the wrong direction because the NPRM for the test itself does not mention this feature. JPMA suggested that the final rule and test procedure specify the direction of the IR–TRACC consistent with the final rule on the Q3s to alleviate confusion and inconsistency.

In response, the configuration of the IR–TRACC has been incorporated in the regulatory text of this final rule for preparing the dummies in different CRS configurations. NHTSA's Office of Vehicle Safety Compliance test procedure will include details as well, as suggested by JPMA.

ii. HIII 3-Year-Old Child Test Dummy as an Alternative

NHTSA requested comment in the NPRM on the merits of using an alternative 3-year-old child ATD in FMVSS No. 213a. The alternative dummy was the Hybrid III 3-year-old dummy now used in the frontal crash test of FMVSS No. 213. Comparisons between the Q3s and Hybrid III 3-year-old ATD found that the two dummies' heads and necks provided nearly equivalent biofidelity. However, in all other biofidelity test conditions—shoulder, thorax and pelvis—the Q3s exhibited significant advantages relative to the alternative HIII 3-year-old design. In the NPRM, NHTSA stated its preference for the Q3s but sought comments on the alternative use of the Hybrid III 3-year-old ATD instead of the Q3s.

Comments Received

Dorel stated that it would support the temporary inclusion of the Hybrid III 3-year-old ATD as the introduction and availability of the Q3s was difficult from the dummy manufacturer. Dorel supported the approach of permitting optional use of the Hybrid III for some period of time in lieu of the Q3s dummy, adding that an option to use the Hybrid III 3-year-old ATD could serve to fill the lack of availability of the Q3s, as well as provide additional time to study the effects of the Q3s.

Dorel noted the comments filed by Humanetics in Docket NHTSA–2013–0118, which stated that NHTSA's proposal was not based on the latest Q3s dummy. Dorel added that when the dummy drawings and specifications change, it can affect the outcome of crash tests and cause manufacturers to consider different countermeasures. Dorel stated that at some point, the drawings and specifications need to be frozen so that NHTSA and manufacturers can be certain that they are using the same dummy in the research and, ultimately, compliance testing.

Britax and JPMA stated at that time that Britax and other CRS manufacturers had limited opportunity to test with the Q3s ATD and so had limited feedback to offer the agency on this topic. Britax also stated it would favor a phased-in requirement and use of the Q3s ATD so that, for a period of time, either ATD could be used to certify to the side impact test requirements. Britax noted this approach was similar to when the agency permitted use of the Hybrid II or Hybrid III ATDs following revisions to the frontal impact sled test requirements of FMVSS No. 213. Conversely, TRL argued that, if the Q3 has been ruled to not adequately meet lateral biofidelity requirements, then the Hybrid III 3-year-old should also not be used if it also does not meet side impact biofidelity requirements.

Agency Response

NHTSA has decided against using the HIII–3-year-old dummy in the side impact compliance test. NHTSA explained in the NPRM that biofidelity tests showed that, while the HIII and the Q3s dummies' heads and necks provided nearly equivalent biofidelity, the Q3s exhibited significant advantages relative to the HIII–3-year-old in all other test conditions (shoulder, thorax and pelvis). NHTSA agrees with TRL that if the Hybrid III–3-year-old dummy does not adequately meet lateral

[239] 85 FR 69898.

[240] *Id.*

[241] See Wietholter & Louden (2021).

biofidelity, then it should not be used to measure injury mechanisms on the child occupant in a side impact as envisioned in the dynamic test of FMVSS No. 213a. The agency has not found any advantage in using the HIII–3-year-old dummy in the side impact test, and so is not adopting use of the HIII dummy.

In their 2014 comments, Dorel and Britax supported the temporary use of the HIII–3-year-old dummy in the FMVSS No. 213a test based on their limited experience with the Q3s. Since 2014, manufacturers have had years to become familiar with the dummy, and, as discussed further in the lead time section below, manufacturers will be provided lead time to use the Q3s before certifying their CRSs to FMVSS No. 213a. Based on these considerations, NHTSA has decided not to use the Hybrid III-based 3-year-old ATD, and has instead decided to adopt a final test procedure that uses only the Q3s to evaluate injury criteria and compliance with FMVSS No. 213a. Use of the Q3s will ensure the fullest possible evaluation of the side protection of CRSs certified to the new standard.

The agency's rulemaking adopting the Q3s into 49 CFR part 572 ''froze'' the specifications of the test dummy in NHTSA's regulation, as sought by Dorel's comment. Thus, the test dummy is an established NHTSA test tool until amended through notice-and-comment rulemaking. We note that while there were different build levels of the Q3s dummy used throughout the development of the Q3s dummy, the January 2014 NPRM (79 FR 4570) proposing a side impact test for CRSs was based on tests using the proposed (and now adopted) Q3s dummy.

4. Q3s Performance Measures

To determine the injury criteria to use with the Q3s ATD, NHTSA analyzed NASS–CDS data average annual estimates (1995–2009) for AIS 2+ injuries to children 0- to 12-years-old in rear seats. Data showed that the most common AIS 2+ injuries among children restrained in side impacts were to the head and face (55 percent), torso (chest and abdomen—29 percent), and upper and lower extremities (13 percent). Given the high frequency of head and thoracic injuries to children involved in side crashes reported in these data and in multiple studies,[242] NHTSA proposed appropriate injury criteria that focused on the child occupant's head and thorax.

i. Head Injury Criterion (HIC)

NHTSA proposed to address the potential for head injuries by setting a maximum on the HIC value measured by the Q3s in the side impact test. HIC is used in FMVSS No. 213 and in all other crashworthiness FMVSSs that protect against adult and child head injury. However, while FMVSS No. 213's frontal impact requirement specifies an injury assessment reference value (IARV) of 1,000 measured in a 36 ms timeframe (36 ms for integrating head acceleration) (HIC36=1,000), NHTSA proposed a HIC limit of 570 measured in a 15 ms timeframe (15 ms duration for integrating head resultant acceleration) (HIC15=570) when using the Q3s dummy in the side impact sled test.

NHTSA explained differences between the FMVSS No. 213 frontal impact test and the proposed side impact test that made the HIC36=1,000 and HIC15=570 performance values appropriate for each respective test. Specifically, FMVSS No. 213's frontal impact test evaluates the performance of CRSs on a frontal impact sled buck that does not have a structure (representing a front seat) forward of the tested CRS on the bench seat. In contrast, in the proposed side impact test, there is a simulated vehicle door and the test environment is set up so that ATD head contact with the CRS and the door is probable. Injurious contacts (such as head-to-door contacts) are of short duration (less than 15 ms) in the FMVSS No. 213a set-up and are more appropriately addressed by HIC15 (15 millisecond duration for integrating head resultant acceleration) than HIC36.

For head impact accelerations with duration less than 15 ms, the computed values of HIC15 and HIC36 are generally equivalent, meaning that the injury threshold level for HIC15=570 is more stringent than the threshold of HIC36=1,000. HIC15 is a more appropriate requirement than HIC36 for the short duration impact of FMVSS No. 213a, and is better able to discern injurious impact events.[243]

NHTSA also considered alternative HIC15 requirements of 400 and 800, and included an assessment of benefits and costs of those alternatives in the PRIA accompanying the NPRM. Ultimately, the agency declined either as the preferred proposed injury criterion.[244]

Comments Received

There were no comments on the proposed HIC15 thresholds to evaluate head injuries. NHTSA has adopted the HIC15=570 criterion for the reasons provided in the NPRM.

ii. Head Contact (Not Assessed)

NHTSA tentatively concluded in the NPRM there was no safety need for a performance criterion that prohibited Q3s head contact with the intruding door.[245] NHTSA's video analysis showed that 13 out of 19 forward-facing CRS models had head-to-door contact during the test. However, further analysis of the head acceleration time histories showed that peak acceleration of the head occurred before the head contacted the door. Six of the 13 models that had head-to-door contact had HIC15 values exceeding 570; these peak HIC15 values occurred prior to head contact with the door. This suggested that the peak head acceleration was the result of a previous impact, most likely the head contacting the side of the CRS at the time the CRS contacted the intruding door.

Given that the head acceleration values computed during the time of head-to-door contact were lower than the peak head acceleration, NHTSA determined the risk of head injury from head-to-door contacts of the ATD in the 13 CRSs was not only much lower than the risk from the peak acceleration, but was also of a magnitude that would not result in serious injury. Accordingly, the agency tentatively decided not to use a performance criterion based specifically on head contact in tests with the Q3s dummy, as HIC15 appeared to sufficiently discern between non-injurious contacts and injurious contacts, and showed that head-to-door contact was not a relevant predictor of head injury in the side impact test.

[242] Craig, M., ''Q3s Injury Criteria,'' Human Injury Research Division, National Highway Traffic Safety Administration (Nov. 2013) [hereinafter Craig (2013)].

[243] For long duration accelerations without a pronounced peak, such as those when the head does not contact any hard surfaces (as in the frontal FMVSS No. 213 test), the computed HIC15 value may be lower than the HIC36 value—so the HIC36 computation may be a better representation of the overall head acceleration.

[244] PRIA at pg. 65. NHTSA concluded that the 800 HIC limit resulted in many fewer equivalent lives saved than the proposed 570 HIC limit, higher cost per equivalent life saved, and lower net benefits. Although the 400 HIC alternative resulted in more equivalent lives saved and higher net benefits, NHTSA was concerned about the effect of the 400 HIC limit on child restraint design and use. Specifically, NHTSA was not able to demonstrate that theoretical structural improvements to CRSs could actually achieve the 400 HIC limit, and other means of meeting the limit would reduce the space provided for the child's head or make the CRS wider and heavier, which may impact overall use of the CRS.

[245] Such a performance criterion for CRSs is currently being used in the Australian standard AS/NZS 1754, and the Australian CREP consumer information program.

Comments Received

There were a number of comments on this issue. UMTRI, ARCCA, NTSB, and the Transportation Research Laboratory (TRL) commented that a head containment criterion should be adopted in addition to HIC15. ARCCA commented that notwithstanding a low HIC15 score from the Q3s head impact with the door, there could be a risk of head injury for a child due to the differences between the Q3s dummy and a human child, and differences between the lab crash conditions of the FMVSS No. 213a test and the real world. Similarly, Mr. Hauschild stated that vehicle doors will have different designs that will include differing padding, shapes, and trim, so data from the test seat assembly might not be sufficient to show an absence of a safety need for a head containment requirement.

Some commenters (Mr. Hauschild, UMTRI, NTSB) believed it would be inconsistent to adopt a head containment performance criterion for the 12-month-old CRABI, and not for the Q3s. (NTSB raised a similar point regarding the inconsistence of measuring HIC with the Q3s but not with the 12-month-old CRABI. NTSB queried whether a head-to-CRS impact for the 12-month-old CRABI dummy may be injurious in some circumstances, implying that HIC should be a criterion in tests.)

Response

NHTSA is not adopting a head containment requirement in tests with the Q3s. NHTSA believes there is no safety need for a performance criterion prohibiting head contact of the Q3s because the HIC criterion discerns between contacts that are non-injurious (HIC15 less than 570) (soft contacts), and hard, injurious (HIC15 more than 570)) contacts. During the FMVSS No. 213a near-side impact test the intruding door first contacts the outer surface of the CRS, and then both the door and CRS side structure continue intruding into the dummy's seating area and impact the dummy. The first impact to the dummy's head happens when the CRS side countermeasure (side wing) [246] contacts the dummy. The HIC15 criterion evaluates whether this impact is injurious or not. Testing showed that this impact results in a high HIC, and that head-to-door contacts that occurred after the first impact of the head against the CRS side wing were soft contacts. That is, head-to-door impacts did not result in an acceleration response that would be injurious, as the HICs were consistently below the injury assessment reference value of 570. In light of this data, prohibiting head contact with the door as a criterion in the side impact test would not be meaningful, as such a prohibition would be commensurate with disallowing head contact with a non-injurious surface.

As explained above in this preamble, the stiffness of the simulated door in the SISA is representative of the stiffness found in vehicles, which NHTSA assessed using the free motion headform (FMH) testing described above. The stiffness of the 51 mm thick door padding includes the combined stiffness of the door assembly (inner and outer panel of the door) and the interior door padding. Details of the development of the door characteristics can be found in the ''Child Restraint Side Impact Test Procedure Development'' technical report.[247] Because the simulated door is a good representation of a vehicle door, NHTSA does not believe it is necessary to include a contact criterion when using the Q3s dummy. On the issue of the perceived inconsistencies in how the dummies are used in FMVSS No. 213a, as explained below, there is good reason not to adopt a restriction against head contact by the Q3s even though a restriction is adopted in tests with the 12-month-old CRABI. The Q3s and the CRABI dummies are fundamentally different. As the agency explained in the NPRM, the Q3s is a specially designed side impact dummy, while the 12-month-old CRABI dummy is designed for use in frontal impacts. The 12-month-old CRABI's injury-measuring instrumentation is not designed to measure HIC in a side crash, so its measurements of HIC to ascertain the potential for head injuries have not been shown valid in side crashes. (This is explained in more detail in the section below on the CRABI dummy.) If the CRABI were designed for use in side impacts, there would be more of a basis for harmonizing how the dummies are used in FMVSS No. 213a.

The agency is using the CRABI dummy in FMVSS No. 213a because there is no other suitable test dummy designed to test child restraints for children of sizes represented by the 12-month-old dummy. NHTSA is mandated by MAP–21 to issue a final rule to improve the protection of children under 18.1 kg (40 lb) seated in side impacts and is incorporating the 12-month-old CRABI in a manner that makes that possible. While the test dummy is a frontal test dummy, it is a valuable test tool in providing a worst-case assessment of injury risk in a side impact regarding head-to-door contact. A CRS that is unable to prevent the CRABI ATD's head from contacting the door in the side impact test is highly unlikely to prevent a real child's head from impacting the door. The head-to-door contact criterion will lead to improved side coverage of the infant's head and better means of preventing head-to-door contact.[248]

TRL commented that NHTSA test data from tests of the CRABI 12-month-old seem to contradict NHTSA's conclusion that the Q3s's peak head accelerations occur before contact with the door. The commenter states that, in tests where the CRABI head contacts the door, the HIC15 limit is exceeded, and that the one seat that failed on head-to-door contact recorded one of the lowest HIC values.

In response, the tests with the CRABI dummy presented in the NPRM had a high rate of HIC15 failures, yet field experience of rear facing seats indicates that the CRSs are very safe in side impacts (we discuss this issue further in a section below on head-to-door contact). The CRABI dummy's shoulder and neck are not designed for lateral loading and this may influence head kinematics prior to contact with the CRS/door. The CRABI head does not meet lateral biofidelity requirements. Therefore, NHTSA is unable to confirm that the dummy's HIC measurement provides a valid assessment of head injury risk in side impacts. Both the severity of the resulting head contacts and the response of the head to those contacts may not be representative of the real world.

TRL also believed that FMVSS No. 213a will encourage keeping the HIC15 low by allowing the Q3s head to roll out of the forward-facing CRS head pad, which increases the risk of contact between the head and the door. TRL was concerned that possible consequences of the standard's encouraging designs that roll out the head would be that the head may less protected in the event of a more oblique impact, and subject to risks of secondary impact or flying debris like broken glass. Consumers Union (CU) also observed that the forward component of the proposed side impact pulse caused the Q3s head to ''roll out'' of the child restraint shell in some instances. CU stated that, with taller forward-facing

[246] The first contact could be to the SISA door, if the child restraint has no side wing in the head area.

[247] Sullivan et al. (2013).

[248] Similarly, the child restraint must maintain structural integrity in the FMVSS No. 213a side crash when restraining the mass of the 12-month-old CRABI. Use of the CRABI will ensure a robust assessment of the structural integrity of the CRS in a dynamic side crash event.

seats or booster seats, the Q3s's head position will be above the top edge (beltline) of the simulated door, so the rollout may result in a lower HIC as the ATD's head avoids contacting the door or inside surface of the CRS. CU argued that, although the rollout may predict real crash dynamics, ''the lack of any interaction above the simulated door may not be realistic. In an actual side impact crash, window glass, pillars, or an intruding vehicle above the vehicle beltline will likely be a point of contact for a child's head.'' [249] CU suggested NHTSA consider a planar limit that would reduce the potential for seats to be designed to take advantage of the rollout of the dummy's head to achieve low HIC values.

In response, NHTSA disagrees that in the absence of a Q3s head contact criterion, CRS manufacturers will design their seats in a manner that increases the likelihood of head-to-door contact. Managing the crash energy impacted to the dummy's head from an intruding door to meet the HIC15=570 criterion is an engineering challenge. It is highly unlikely that a CRS design would factor in head rollout, as managing the energy of the impact of the head when it eventually contacts the moving door will likely be unfeasible without managing the crash forces through countermeasures like foam and structures engineered into the side wings, and means to restricting the dummy's head within that protective area.

NHTSA's testing with the Q3s dummy in actual vehicles showed the CRS side head wing was in between the head of the dummy and the door, as the height of the Q3s dummy's head in a CRS was positioned at or was only partially above the windowsill. NHTSA modeled the FMVSS No. 213a side impact test to replicate the dynamics of FMVSS No. 214 MDB tests of actual vehicles. During the tests NHTSA conducted to model this protocol, we did not see any intruding vehicle or pillars interacting with the dummy. Some flexion of the CRS and dummy's head was present, but it was not enough to contact the glass, as the dummy is not tall enough to reach the glazing. Therefore, in response to CU, NHTSA does not believe a planar limit for this rulemaking is necessary. Although some rollout of the head of taller (older) occupants may occur above the window sill due to the higher sitting height of the child, use of a planar limit and the like addressing how CRSs should restrain the head of taller (older) occupants is beyond the scope of this rulemaking.

iii. Chest Deflection

The agency proposed a chest displacement IARV for the Q3s of 23 mm. The proposed 23 mm chest displacement IARV was based on two separate studies that used length-based scaling from adult post-mortem human subject and dummy responses to generate an estimated injury risk for a 3-year-old child.[250] [251] The studies both found, based on their independent data sets, that a displacement of 23 mm represented a 30 percent and 33 percent probability of AIS 3+ injury, respectively.

The agency did not receive any comments on the proposed chest deflection thresholds. NHTSA has adopted the proposed criterion for the reasons provided in the NPRM.

b. CRABI 12-Month-Old

The CRABI dummy is a frontal crash test dummy and is instrumented with head, neck, and chest accelerometers. NHTSA noted in the NPRM that, while there is no infant test dummy available that is specially designed for side impact testing, the agency believed that the CRABI 12-month-old could be a useful tool to evaluate critical aspects of CRS performance in side impacts. Because children under 1-year-old have the highest restraint use, NHTSA sought to find a way to evaluate the side impact performance of the CRSs they use, even if the evaluation is limited to containment, structural integrity, and other related matters.

1. Alternative ATDs

Several commenters suggested developing a new 12-month-old dummy to assess side impact performance. Graco suggested considering developing a Q1s (Q-series one-year-old), as did TRL, which argued that the Q1 is used for front and side impact testing in United Nations (U.N.) Regulations No. 44 (R.44) and No. 129 (R.129) [252] and would allow head accelerations to be assessed.

While NHTSA has not evaluated the Q1 dummy, NHTSA does not believe the Q1 dummy, which is a scaled version of the Q3 dummy, is biofidelic in side impact. NHTSA had evaluated the Q3 dummy and found it was not biofidelic in side impact. As a result, NHTSA conducted extensive research on modifications to the Q3 dummy design to improve its biofidelity in side impact. This multi-year agency effort led to the development of the Q3s dummy. NHTSA believes it is unnecessary to delay the final rule further to conduct multi-year research for developing a version of the Q1 dummy with appropriate biofidelity in side impact. The agency believes the use of the CRABI 12-month old dummy, along with the restriction protecting against head contact in the side test, will enhance the side crash protection of these CRSs.

2. Durability

JPMA raised concerns about the durability of the CRABI dummy, stating that in some tests the CRABI 12-month-old's arm broke at the elbow. The commenter stated that the attendant replacement costs of the dummy's upper arm was approximately $900, which JPMA said was a very significant expense if repeated during many test cycles. JPMA said its members reported that, during the side impact event, the test dummy's arm gets crushed between the side of the seat (which is impacted by the door panel feature) and the test dummy's torso, and that there is sufficient deflection at this point to break the elbow. Similarly, while Graco commented in support of the use of the 12-month-old CRABI dummy, it noted some concerns with long term maintenance of the dummy over time.

In response, during the development period of the side impact test protocol, and with over 50 tests with the 12-month-old CRABI dummy at VRTC, NHTSA did not observe arm breakage as described by JPMA.[253] Also, during testing at Kettering University (discussed in a section below), only one 12-month-old CRABI dummy test resulted in a fractured arm. NHTSA believes the problem with the arm breakage may have been due to an anomaly in the dummy set up in the JPMA tests. NHTSA is not aware of data demonstrating that the dummy's durability renders the dummy insufficient for use in the FMVSS No. 213a side impact test.

NHTSA also notes that, in the years since the 2014 NPRM preceding this

[249] September 1, 2015 comment, p. 3.

[250] Mertz et al., ''Biomechanical and Scaling Bases for Frontal and Side Impact Injury Assessment Reference Values,'' 47th Stapp Car Crash Conference, 2003–22–0009, October 2003.

[251] Craig (2013).

[252] United Nations Economic Commission for Europe (UNECE). Regulation 44, ''Child Restraint Systems'' and UNECE Regulation 129, ''Enhanced Child Restraint Systems.''

[253] In a test at VRTC an arm and leg were broken, but the breakage occurred to the arm and leg on the opposite side of impact (*i.e.* the impact was to the right side of the dummy but the breakage was to the left arm and leg). NHTSA believes the broken arm and leg on the opposite side of impact were a result of anomalous and undetermined factors and were not related to the durability of the dummy.

final rule, and during the course of the testing of the Q3s in support of the rulemaking incorporating the dummy into 49 CFR part 572,[254] NHTSA has not learned of any dummy durability issues with the Q3s dummy as well.

3. Head-to-Door Contact

NHTSA proposed to use the CRABI 12-month-old ATD to measure head-to-door contact only, and not HIC15, noting concerns about the real-world relevance of the HIC values measured using the CRABI 12-month-old during developmental side impact testing. NHTSA presented results of 12 tests performed with rear-facing CRSs using the CRABI 12-month-old that showed nearly all of the CRSs exceeded the HIC15 injury threshold value of 390, which is the injury criteria used in FMVSS No. 208. NHTSA hypothesized that the CRABI 12-month-old dummy's shoulder and neck were not designed for lateral loading, which may influence head kinematics prior to contact with the CRS/door. Therefore, NHTSA concluded that both the severity of the resulting head contacts and the response of the head to those contacts may not be representative of the real world.

Although tests with the CRABI 12-month-old showed many of the CRSs did not meet a HIC15 criterion, field experience of rear-facing seats indicate that the CRSs are very safe in side impacts and provide five times more protection against serious injury than forward-facing seats in side impacts.[255] Accordingly, NHTSA has decided to use the CRABI 12-month-old to assess safety risks related to a CRS's ability to limit head-to-door contact in side crashes. The CRABI 12-month-old will provide a worst-case assessment of injury risk in a side impact in terms of head-to-door contact. That is, if the CRS were unable to prevent the ATD's head from contacting the door in the test, such an outcome is a reasonable indication of an unacceptable risk of head contact by the human child. NHTSA's study of 12 tests using the CRABI 12-month-old in rear-facing CRSs showed that 1 (Combi Shuttle) out of 12 rear-facing CRS models tested had head-to-door contact during the test. A head-to-door criterion for assessing CRSs tested with the CRABI 12-month-old will ensure all rear-facing seats will have sufficient side coverage to protect in side impacts. Moreover, the CRABI dummy is a suitable test device to assess a CRS's ability to maintain its structural integrity in side crashes when restraining 1-year-old children (discussed further below).[256]

4. Component Test

TRL expressed concern about the standard's not measuring loading on the 12-month-old CRABI dummy in rearward-facing seats, and stated that a possible unintended consequence could be that CRS side structures could be stiffened to prevent the head-door contact, which could increase loading to the child's head. TRL suggested that NHTSA could assess the energy absorption capabilities of the CRS in the form of a headform drop test measuring the ability of the side wings to manage impact energy. TRL explained that this type of component testing is currently conducted as part of the R.44/R.129 type-approval testing.

NHTSA considered this matter and collaborated with Transport Canada (TC) to evaluate new and existing component level tests that could evaluate the energy-absorption capability of the side structure of CRSs. Transport Canada evaluated energy absorption methodologies (including the ECE R.129 head drop test) [257] to potentially incorporate into FMVSS No. 213a and Canada Motor Vehicle Safety Standard (CMVSS) No. 213, but found that the procedure in the European standard does not adequately discriminate between materials that are and are not energy absorbing.[258] NHTSA and TC were unable to find a suitable methodology that could be used to evaluate energy absorption capabilities of the side structure of CRSs.[259]

5. CRS System Integrity and Energy Distribution

NHTSA proposed to require child restraints to maintain system integrity when dynamically tested with the Q3s and CRABI 12-month-old dummies. When a CRS is dynamically tested with the appropriate ATD, there could not be any complete separation of any load-bearing structural element of the CRS, or any partial separation exposing surfaces with sharp edges that may contact an occupant. These requirements would reduce the likelihood that a child using the CRS would be injured by the collapse or disintegration of the system in a side crash, or by contact with the interior of the passenger compartment or with components of the CRS.

Injury from contacting protrusions, such as the pointed ends of screws mounted in padding, would be prevented in a similar manner as that specified for the frontal crash test in FMVSS No. 213. The height of such protrusions would be limited to not more than 9.5 mm (0.375 inch) above any immediately adjacent surface. Also, contactable surfaces (surfaces contacted by the head or torso of the ATD) could not have an edge with a radius of less than 6.35 mm (0.25 inch), even under padding. Padding would compress in an impact and the load imposed on the child would be concentrated and potentially injurious.

Comments Received

CU suggested that NHTSA consider acceptance criteria that address the ability of the seat to maintain the connection between the carrier portion of seats and their corresponding bases. CU explained that, although separation of the carrier and base connection may be interpreted as a separated load-bearing structural element per currently proposed acceptance criteria, it may warrant its own performance requirement. CU added that NHTSA should consider partial separations in load-bearing areas that may significantly reduce a seat's ability to contain its occupant or to remain attached to the vehicle seat as potential non-compliances with the standard. CU explained that rear-facing bases, for example, could exhibit significant levels of cracking that will never be considered contactable, but which could potentially significantly degrade a seat's ability to remain attached to a vehicle.

Agency Response

Structural integrity will be evaluated with the same criteria in the current FMVSS No. 213 S5.1.1. The objectives of the system integrity requirements are to prevent ejection from the restraint system and to ensure that the system does not fracture or separate in such a way as to harm the child. Structural integrity requirements require CRSs dynamically tested with the appropriate dummy have no complete separation of

[254] 85 FR 69898, *supra.*

[255] Sherwood et al. (2007).

[256] NHTSA did not propose a chest injury criterion for the CRABI. Biofidelic corridors for 12-month-old children are not available. Also, because the small size of a 12-month old dummy makes it difficult to fit instrumentation in such limited space, it may not be feasible to build and fully instrument a dummy this size for side impacts.

[257] Head drop tests specifying a 60 g head form threshold and a drop height of 100 mm.

[258] Hallaoui, K.E., Cohen, M., Tylko, S. ''Child Restraint Headrest Conformity Test Document.'' April 2017. To be docketed along with this final rule.

[259] FMVSS No. 213 had a head impact protection requirement for rear-facing CRSs that required areas contactable by the dummy's head to be covered with slow recovery, energy absorbing material. That requirement was removed when the 12-month-old CRABI dummy was adopted into FMVSS No. 213 and HIC was introduced as a performance measure. The agency decided against this approach for FMVSS No. 213a because not enough is known about a foam specification to distinguish between effective and ineffective foams.

any load bearing structural element of the system or any partial separation exposing surfaces with sharp edges that may contact an occupant. The agency amended FMVSS No. 213 to allow some partial separations in response to comments from CRS manufacturers that stated that some CRS separations (*e.g.,* hairline fracturing) could be purposely designed into the CRS to improve its energy absorption performance.[260] NHTSA did not see any cracking or evidence of poor infant carrier retention during side impact testing. These requirements have ensured the structural integrity of child restraints in frontal impacts for years. The commenter did not provide sufficient reasons for concluding additional requirements for evaluating structural integrity are necessary in side impacts.

IX. Repeatability and Reproducibility

The Vehicle Safety Act requires FMVSS that are practicable, meet the need for motor vehicle safety, and stated in objective terms.[261] In proposing FMVSS No. 213a, NHTSA determined that the Takata-based test procedure produced repeatable results and was able to provide results that distinguished between the performance of various CRS models based on the design of the side wings and stiffness of the CRS padding.[262] Similarly, based on evaluations of the Q3s going back to 2002, the agency determined that the Q3s demonstrated good biofidelity, repeatability, reproducibility, and durability.[263] In the NPRM, NHTSA outlined its plans to evaluate the repeatability and reproducibility of the proposed sled test procedure in different laboratories, and sought comments on what parameters, additional to the proposed specifications, should be specified to reproduce the test procedure on a deceleration sled.[264]

Several commenters discussed the importance of the repeatability and reproducibility of the procedure and provided suggestions to improve repeatability. Dorel emphasized that reproducibility between test facilities is an essential requirement of an objective safety standard and that NHTSA must specify the test procedures for its FMVSS in sufficient detail to ensure that the tests conducted at one test facility will yield results that are essentially identical to the results at a different test facility when the same product is tested. Dorel stated that reproducibility is critical to the CRS industry, and opined that reproducibility is a significant challenge with current FMVSS No. 213.

Dorel stated it conducted a series of side impact tests of the Safety First Air Protect CRS Model at Calspan (a commercial testing facility) on a Hyge[265] sled utilizing a test fixture constructed from the NPRM drawings. Dorel said the tests showed HIC15 values of 313 and 354, while NHTSA's NPRM test data on the same CRS Model provided showed HIC15 values of 424, 566, and 625. Dorel calculated the coefficient of variation (CV) of the HIC15 values as 8.7 for the Calspan tests, while the CV for NHTSA's tests was 19.2 for HIC values. Dorel believed that these results indicate a significant problem in the repeatability and reproducibility of the proposed test method.

Graco stated it conducted more than 110 side impact crash test trials in response to the 2014 proposal and studied repeatability and reproducibility of 5 types of CRSs (rear-facing infant carrier, rear-facing convertible CRS, forward-facing convertible CRS, 3-in-1 forward-facing CRS, and high-back booster seat). Graco stated it tested 8 different CRS models multiple times at three crash test facilities, using different sized dummies, to determine if results are repeatable within the same test facility and reproducible at different test facilities with acceleration-type sleds. The commenter stated there was significant variation across the test facilities and provided HIC15 data of a Q3s dummy from the three test facilities to illustrate differences in test results from different test facilities for a specific CRS.[266] Graco said there were cases where a seat with passing results at a specific test facility produced failing results at another test facility. Graco surmised that the different HIC15 values were most likely due to the differences in the sliding seat acceleration and in head acceleration when the CRS impacts the door. Graco explained that the test facility that produced the failing result at the time the head impacted the door, had a greater sliding seat acceleration than the other two facilities.

Graco also provided data of chest deflection of the Q3s dummy from tests conducted at the three test facilities, to illustrate differences in the chest deflection results at different test facilities.[267] Graco reiterated that there were cases where a CRS with passing chest deflection results at one test facility produced failing results at other test facilities. Graco believed that since the timing of these high chest deflection measurements occur at the same time as the HIC15 measurements, the same factors contributed to the variation in measurements of chest deflection and HIC15 values across the different test facilities (*i.e.,* differences in sliding seat acceleration and acceleration of the thorax at the time of contact with the door foam).

Graco provided initial test data on the potential cause of variation and provided its recommendations on sled design and other factors to reduce the variation in results between test facilities.

Britax stated that it is essential that the test procedure's provisions for seat and ATD installation are described in sufficient detail to ensure consistency in test results and ATD measurements. Britax also stated that defining specifications for variables such as the test rig foam and set up are critical to achieving repeatable and consistent results.

Agency Response

NHTSA has modified the SISA to minimize sources of variability in the test and to make the test setup more durable. The modifications reduced vibrations that affect accelerometer readings, defined accelerometer processing and the type and location of the accelerometers, and defined a different honeycomb with a reduced tolerance to minimize variation. NHTSA's modifications also enable the SISA to better match the changes to the FMVSS No. 213 frontal impact sled test seat assembly proposed in the November 2, 2020 MAP–21 NPRM, *supra.* These modifications included additional stiffening of the seat's framework, an updated D-ring location, increased seat back height, simplified door and armrest shapes, modified lower anchor bracket and tether anchor location, defined seating foam, and incorporation of a seat cushion assembly representative of current vehicles. NHTSA also defined in more detail the procedure for setting up the CRS and ATD prior to testing (including

[260] 43 FR 21470 (May 18, 1978).

[261] 49 U.S.C. 30111(a).

[262] 79 FR at 4582 (Jan. 28, 2014) (citing Sullivan et al. (2009), Sullivan et al. (2011)).

[263] NPRM, 79 FR at 4590 (Jan. 28, 2014); final rule, 85 FR 69898 (Nov. 3, 2020).

[264] ''Repeatability'' is defined here as the similarity of test responses (dummy injury measures) when subjected to multiple repeats of a given test condition. ''Reproducibility'' is defined as the similarity of test responses subjected to repeats of a given test condition in different test laboratories.

[265] Hyge is a type of acceleration sled.

[266] NHTSA–2014–0012–0042, at pg. 2.

[267] *Id.,* at pg. 3.

arm placement, discussed further in a section below), modified SISA drawing specifications to eliminate any ambiguities, and specified the weight of the sliding seat at test facilities, as the weight affects the pulse generated by the sliding seat/honeycomb impact.

These modifications improved the R&R of the FMVSS No. 213a test. The modifications to the SISA reduced the variability of test results. Some improvements to R&R also resulted from further developing the level of detail in the test procedure, as suggested by some commenters. NHTSA believes that the variability in tests manufacturers performed at different laboratories was partly because there was no detailed test procedure during the NPRM phase specifying how the FMVSS No. 213a test should be conducted.

With a detailed test procedure, NHTSA tests at two different test facilities with different sled systems (acceleration and deceleration types) were able to produce repeatable and reproducible results.[268] The details of the improvements are described at length in the technical reports by VRTC[269] and NHTSA/Kettering.[270] The updated technical drawings of the SISA are available in the docket of this final rule.

After improving the test procedure and SISA, the agency conducted tests on six CRS models to evaluate repeatability at VRTC with the acceleration sled, and on five of the same six CRS models to evaluate repeatability at Kettering University with the deceleration sled. NHTSA sought to evaluate the reproducibility of the test results from the two test facilities.[271] The coefficient of variation (CV)[272] was used to objectively evaluate the repeatability and reproducibility of the FMVSS No. 213a side test fixtures and procedures. The CV is calculated by dividing the standard deviation by the average; multiplying the CV by 100 computes the percent CV. For assessing repeatability and reproducibility, a CV value less than or equal to 5 percent was considered as excellent, a CV value between 5 and 10 percent was considered as good, a CV value between 10 and 15 as marginal, and CV values above 15 were considered poor. Since variation in test results is likely contributable to more than just the test fixtures, dummies and procedure, a percent CV at or below 10 percent indicates results are similar. Other sources of variability include, but are not limited to, pulse variation, and variability related to differences in the CRS test specimens as produced.

The test program showed good to excellent repeatability and reproducibility in the test results. Table 24 shows the CRS models, orientation and CV values at each of the two test facilities to evaluate repeatability. The CV values for HIC and chest deflection in tests conducted at VRTC with the Q3s dummy were less than 5 percent and are considered excellent for repeatability.[273] The CV values for HIC and chest deflection in tests conducted at Kettering with the Q3s dummy were less than 5 percent (except for chest deflection measured in the rear-facing convertible (Graco Comfort Sport) which had a CV value of 16.1 percent).

TABLE 24—COEFFICIENT OF VARIATION (CV) FOR ASSESSING REPEATABILITY AND REPRODUCIBILITY

ATD	CRS	Orientation	VRTC CV%		Kettering CV%		VRTC and Kettering	
			H1C15	Chest deflection	H1C15	Chest deflection	H1C15	Chest deflection
Q3s	Evenflo Maestro.	FF Combination **.	4.3	1.3	4.4	1.4	4.2	1.2
Q3s	Grace Comfort Sport.	FF Convertible **.	4	3.1	2.1	1.9	3.4	3.6
Q3s	Grace Comfort Sport.	RF Convertible	3.6	2.5	3	16.1	16	−10.5
Q3s	Diono Olympia *.	RF Convertible					2.3	

* The Diono Olympia had fewer tests per test facility compared to the rest in this analysis. The Diono Olympia was tested once at VRTC and twice at Kettering. The CV for Chest Deflection was not calculated as an instrumentation problem caused an erroneous reading in the test at VRTC.

** All forward-facing CRSs were installed using the lower anchors and tether anchor of CRAS and all rear-facing CRSs were installed using lower anchors only.

[268] The test procedure followed during NHTSA's testing can be found in the technical report, ''FMVSS No. 213 Side Impact Test Evaluation and Revision,'' available in the docket of this final rule.

[269] Louden & Wietholter (2022).

[270] Brelin-Fornari, J., ''Final Report on CRS Side Impact Study of Repeatability and Reproducibility using a Deceleration Sled,'' July 2017. Available in the docket for this final rule.

[271] Wietholter, K. & Louden, A. (2021, November). *Repeatability and Reproducibility of the FMVSS No. 213 Side Impact Test.* Washington, DC: National Highway Traffic Safety Administration.

[272] NHTSA has used CVs to assess the repeatability and reproducibility of ATDs throughout the history of Part 572, starting in 1975. See NPRM for the original subpart B Hybrid II 50th percentile male ATD (40 FR 33466; August 8, 1975).

[273] The CV values for HIC results in tests conducted at VRTC with the CRABI 12-month-old dummy were less than 8 percent showing good repeatability as well; however, this was analyzed for comparison purposes only, as the final FMVSS No. 213a test procedure only evaluates CRABI 12-month-old head containment on a pass/fail basis.

It is unknown why the results for the Graco rear-facing convertible were elevated; NHTSA could not perform additional testing under the contract. Possibilities include limited testing, variation in test set-up, variation in the overall relative velocity at impact time (while within the tolerance it was higher than other repeat tests) and/or other factors (*i.e.* CRS sensitivity). CVs obtained elsewhere were not as high and were in the acceptable range. While not part of this test series, during the development of the NPRM, NHTSA/Kettering performed side impact tests with a deceleration-type sled. Tests with the Combi Zeus and Britax Advocate in rear-facing configuration with the Q3s dummy [274] showed CV values of only 4.9 percent and 4.2 percent respectively for chest displacement. These results show an excellent CV for chest displacement in testing with a deceleration-type sled test.[275] NHTSA believes that more tests at Kettering troubleshooting the increased CV value of 16.1 percent would have resulted in a reduced CV.

The tests performed with the CRABI 12-month-old dummy (see Table 25 below) provided consistent head contact results at each test facility (that is, the result of whether there was contact of the head with the door was the same for all the repeat tests with the same CRS in both test facilities).

TABLE 25—SIDE IMPACT TESTS USING THE CRABI 12-MONTH-OLD DUMMY

CRS	Orientation	VRTC	Kettering	Door contact
Chicco KeyFit 30	Rear Facing	3	3	No.
Britax Boulevard	Rear Facing	3	3	No.
Cosco Apt 40	Forward Facing	3	1	No.

The CV values for HIC and chest deflection measures for each CRS model from tests conducted in both test facilities with the Q3s dummy considered together were generally lower than 5 percent. Only one CRS model in rear-facing configuration using the Q3s dummy at both test facilities had a CV value of 10.5 percent for chest deflection and a 16 percent CV for HIC15 when the data from the two test facilities for this CRS were combined. While these results suggest that HIC measures of the Q3s dummy in rear-facing CRSs have poor reproducibility (high CV values), this result is based on test data of one CRS model (Graco Comfort Sport), which also had poor repeatability measures in one of the test facilities. As discussed above, it is unknown why this CRS had poor repeatability. The CV of HIC15 measures from a more limited set of tests with the Diono Olympia CRS in the rear-facing configuration using the Q3s dummy (one test at VRTC and two tests at Kettering) was 2.3 percent, showing excellent repeatability in a rear-facing CRS with the Q3s dummy. Details on the repeatability and reproducibility analysis can be found in the docket for this final rule.[276]

The CV analysis confirms good repeatability and reproducibility of HIC and chest deflection measures in forward-facing CRSs tested with the Q3s dummy. Rear-facing infant tests with the CRABI 12-month old showed good repeatability and reproducibility for assessing head-to-door contact. CV analysis of rear-facing convertible CRSs with the Q3s had inconclusive results, possibly due to the limited number of data points. The limited test series between the two test facilities with a rear-facing convertible (Diono Olympia) showed HIC15 had a 2.5 percent CV, showing good repeatability and reproducibility with a rear-facing CRSs tested with the Q3s dummy. Chest deflection could not be computed as the test at VRTC had an erroneous chest deflection reading.

NHTSA's CV analysis of the side impact tests with the final configuration of the SISA demonstrates that the changes to the configuration of the SISA and adoption of some of the modifications suggested by commenters (see next section), have addressed the repeatability and reproducibility concerns raised by the commenters. NHTSA has found the variability in the performance measures is within acceptable levels; the repeatability and reproducibility of the side impact test is considered good to excellent. Accordingly, NHTSA has determined that the side impact test, using the dummies specified in the standard to determine compliance with the standard, produces repeatable and reproducible results in repeat tests in the same facility and in multiple tests across different test facilities.

Commenters' Other Suggestions

Accelerometer Placement

Graco recommended that NHTSA provide specifications for accelerometer placement and accepted types, so that data acquisition for velocity and acceleration could be more consistent between test facilities. Graco noted it saw differences in test labs' interpretations of the proposed side impact testing specifications for using the accelerometers, and provided a diagram of differing accelerometer placement locations between facilities. The commenter also provided an acceleration plot demonstrating how different accelerometer types represent the acceleration pulse differently. Graco stated that by defining the location and accepted options for dampened accelerometers, acceleration and velocity measurements can be more standardized to prevent inconsistent calculations of raw data.

Agency Response

NHTSA tested many accelerometer locations [277] on the sliding seat and determined that the final placement of the accelerometers will be on the right rear seat assembly leg at predetermined locations; with the primary

[274] Three repeat tests were performed for each model. Test results are documented in the technical report DOT HS 811 994 and 995. Brelin-Fornarni, J., "Development of NHTSA's Side Impact Test Procedure for Child Restraint Systems Using a Deceleration Sled: Final Report, Part 1. April 2014. Link: *https://www.nhtsa.gov/sites/nhtsa.dot.gov/files/811994-sideimpcttest-chrestraintdecelsled_pt1.pdf* and Brelin-Fornarni, J., "Development of NHTSA's Side Impact Test Procedure for Child Restraint Systems Using a Deceleration Sled: Final Report, Part 2. May 2014. Links: *https://www.nhtsa.gov/sites/nhtsa.dot.gov/files/811994-sideimpcttest-chrestraintdecelsled_pt1.pdf* and *https://www.nhtsa.gov/sites/nhtsa.gov/files/documents/811995-sideimpcttest-chrestraintdecelsled_pt2.pdf.*

[275] These tests were performed with the NPRM proposed SISA and honeycomb; however, as discussed above, updates to the SISA since the NPRM did not affect results. Therefore, we consider the repeatability results of the NPRM tests with the deceleration type sled valid.

[276] Wietholter, K. & Louden, A. (November 2021). *Repeatability and Reproducibility of the FMVSS No. 213 Side Impact Test.* Washington, DC: National Highway Traffic Safety Administration.

[277] See the following report for documented accelerometer placement trials. Louden, A., & Wietholter, K. (September 2022). *FMVSS No. 213 side impact test evaluation and revision* (Report No. DOT HS 812 791). Washington, DC: National Highway Traffic Safety Administration (hereinafter Louden & Wietholter (2022)). Available in the docket of this final rule.

accelerometer to be mounted on top and the redundant to be mounted 31 millimeters below.[278] The selected locations produced the more consistent and less noisy measurements during testing. The final locations of the accelerometers are specified in the final drawing package. The final drawings have also been modified so that the accelerometer specifications allow compliance test facilities to use different brands of accelerometers and prevent sourcing issues in the future.[279]

Belt Engagement

Graco stated it found that, during the time of engagement between the aluminum honeycomb and the impact surface of the sliding seat, the Type 2 shoulder belt is engaged with the door structure, which can affect the sliding seat acceleration pulse. Graco provided images that it believed demonstrates the interference of the shoulder belt webbing, and a graph that displays a modified acceleration pulse profile caused by this interference, compared to an acceleration profile without this interference. Graco recommended NHTSA consider removing this interference of the Type 2 shoulder belt as a control for repeatability of the acceleration pulse.

Agency Response

NHTSA's testing with the CRS installed using the Type 2 (lap/shoulder belt) showed no interference of the shoulder portion of the Type 2 belt with the door.[280] The agency found that in testing, the shoulder portion of the Type 2 belt slides behind the door during contact of the sliding seat with the door. This interaction did not affect the sliding seat acceleration pulse or any of the performance measures.

NHTSA also performed a static trial with the Graco Nautilus, which is the model Graco showed had seatbelt-door interaction. In that trial, the seat belt webbing lay flat against the top of the seat back, which would allow the seat back to go through the door and seat back gap.[281] NHTSA was not able to reproduce Graco's seat belt interaction with the door. The agency believes that any possible seatbelt-door interaction is avoided by ensuring the seat belt lies flat against the seat back. The test procedure will incorporate a step to ensure the seat belt lies flat before testing.

Test Facilities

Dorel expressed concerns about test facilities conducting compliance tests for NHTSA not following the agency's Office of Vehicle Safety Compliance's (OVSC's) published test procedures and not obtaining OVSC's express permission to deviate. The commenter urged NHTSA to increase oversight of the test labs to enhance repeatability and reproducibility of the compliance test results. In response, NHTSA has reviewed its compliance program and has not found evidence of the problem the commenter describes. NHTSA is nonetheless concerned about assertions that deviations from protocols have reduced the integrity of the FMVSS No. 213 tests, so it is emphasizing again to its test lab to use the open and strong channels of communication set up by OVSC for any questions about test procedures or practices. Further, the agency will unreservedly consider ways to improve any issue arising in the course of OVSC testing that impact the quality of the compliance test program.

Dorel stated that it has had concerns about the repeatability and reproducibility of the current frontal impact sled test in FMVSS No. 213. In response, the frontal impact sled test has been effectively used in FMVSS No. 213 compliance tests for over forty years and is instrumental in the assessment of a child restraint's real-world performance in a crash.[282] In 2020, NHTSA took steps to update the sled assembly and strengthen its technical underpinnings by way of the November 2, 2020 NPRM responding to MAP–21.[283] The agency is analyzing comments received on that NPRM and will address all relevant comments relating to the R&R of the frontal sled assembly in the final rule.

X. Lead Time and Effective Date

NHTSA proposed a compliance date of three years from the date of publication of the final rule, meaning that CRSs manufactured on or after that date must meet FMVSS No. 213a. NHTSA proposed to permit optional early compliance with the requirements, to permit manufacturers the option of meeting FMVSS No. 213a sooner than the 3-year compliance date and certifying the compliance of their products to the standard.

NHTSA discussed in the NPRM its tentative determination that there was good cause to provide three years of lead time. The agency believed three years was a reasonable time for CRS manufacturers to gain familiarity with the new side impact standard, the test using the SISA, and the Q3s dummy adopted by the standard. Manufacturers would have to assess the entirety of their product line for conformance to the new standard, devise and incorporate any needed design changes to meet the standard, implement the changes in manufacturing processes for the seats, and certify the compliance of the child restraints. NHTSA believed that three years of lead time provides a timeframe that allows manufacturers to achieve these actions while ensuring the enhanced side impact protection adopted by FMVSS No. 213a is attained as quickly as possible.

Comments Received

Commenters diverged as to the need for a three-year lead time. Child restraint manufacturers commenting on this issue agreed with the proposed lead time. Dorel concurred that a three-year lead time was sufficient, but conditioned its support for this lead time on NHTSA's findings that the test procedure was sufficiently objective to eliminate test-to-test repeatability problems and test facility-to-facility reproducibility problems. In contrast, Safe Ride News (SRN), Safe Kids Worldwide, Mr. Hauschild, Consumers Union (CU), and ARRCA suggested a reduced lead time, from 18 months to two years at the most (SRN and Safe Kids).

Some of the latter commenters argued that manufacturers have already incorporated side impact protection into many of their products, and that the number of children who could be protected by a side impact standard is significant enough to shorten the lead time. Mr. Hauschild stated that, since many of the CRS manufacturers are advertising that their CRSs have side impact protection or that their seats have been side impact tested, they should have no problem meeting the lead time requirements, and may be able to meet the requirement sooner. CU urged NHTSA to shorten the three-year compliance deadline, arguing that MAP–21 was issued in 2012, and that, even then, NHTSA had been working on

[278] This information is discussed in detail in NHTSA's ''FMVSS No. 213 Side Impact Test Evaluation and Revision'' report.

[279] During the agency's testing, we found that the type of accelerometer (damped, undamped, ruggedized, etc.) has an effect on the results as different accelerometers may pick up different vibration levels.

[280] Additional pictures to illustrate the seat belt sliding behind the seat back are available in the docket for this final rule.

[281] Additional pictures to illustrate the seat belt sliding behind the seat back are available in the docket for this final rule.

[282] 44 FR 72131 (December 13, 1979), 45 FR 27045, *seat assembly updated,* 68 FR 37620 (June 24, 2003).

[283] MAP–21 (§ 31501(b)(2)) requires NHTSA to issue a final rule to amend Standard No. 213 to better simulate a single representative motor vehicle rear seat. The regulation information number (RIN) for the rulemaking is RIN 2127–AL34. It may be tracked in the U.S. government's Unified Agenda of Regulatory and Deregulatory Actions.

a side protection standard for years, which should have provided notice to manufacturers that such new side impact requirements were coming. ARRCA believed the FMVSS No. 213a test procedure is not complex and that test facilities should be able to configure their sleds with the required hardware within a month of the final rule being published. ARRCA believed that upgrading the CRSs that do not comply or removing them from the market should be capable of being accomplished within a year of the final rule. ARRCA argued that, under NHTSA's preliminary cost-benefit analysis for the NPRM, a one-year effective date would save the lives of approximately 36 children.

Agency Response

NHTSA is adopting the proposed lead time of three years from the publication date of this final rule. In response to Dorel, the test procedure has been demonstrated to be both repeatable and reproducible, as discussed above and in detail in the report, ''Repeatability and Reproducibility of the FMVSS No. 213 Side Impact Test,'' [284] so the provided lead time will be sufficient.

In response to commenters seeking a shorter lead time, NHTSA has decided against a compliance date less than three years from the date of publication of this final rule for several reasons. This final rule makes modifications to the SISA to minimize sources of variability in the test, make the test setup more durable and increase the representativeness of the SISA to today's vehicles. The rule matches the SISA to the FMVSS No. 213 frontal impact sled test seat assembly proposed in the November 2, 2020 NPRM, *supra.* This final rule also defines in more detail the procedure for setting up the CRS and ATD prior to testing (including arm placement, which can affect test results), specifies the weight of the sliding seat at test facilities, and makes other changes to improve the R&R of the test. Manufacturers will need time to become familiar with the SISA as set forth in this final rule and will need time to test their child restraints on the SISA adopted by this final rule. The agency believes manufacturers will seek to test their products on the SISA, and with the Q3s dummy, to maximize the possibility that the test they use for certifying their products aligns with the test NHTSA uses in the FMVSS No. 213a compliance test. The agency adopted the Q3s into regulation by a final rule only in 2020, so manufacturers will need time to acquire and test with the dummy.[285]

In addition, as shown in NHTSA's 2017 testing of CRSs on the SISA adopted by this final rule, most of the child restraints tested then did *not* meet the FMVSS No. 213a performance criteria. These data indicate a need for CRSs to be re-engineered and reassessed in their use of side wings, padding and other countermeasures in providing side impact protection. Further, this final rule specifies that CRSs will also have to be certified as meeting FMVSS No. 213a when attached by a Type 2 (lap/shoulder seat belt) in addition to the CRAS. Manufacturers will need time to assess the performance of their CRSs when attached to the SISA by way of the belt system, and redesign their restraints with compliant countermeasures as appropriate.

Lastly, NHTSA has a number of ongoing rulemakings mandated by MAP–21 for child restraints. In addition to this final rule, as noted throughout this document MAP–21 directed NHTSA to update the seat assembly used in the frontal crash test of FMVSS No. 213. MAP–21 also directed NHTSA to undertake rulemaking to improve the ease of use of CRAS.[286] A three-year lead time provides time to manufacturers to adjust their manufacturing processes to respond to regulatory changes made by these actions and redesign CRS models, to the extent possible, within their design cycle to minimize the cost impacts on consumers. For the reasons explained above, NHTSA finds good cause to have an effective date of three years following the date of publication in the **Federal Register**.[287]

XI. Regulatory Notices anD Analyses

Executive Order (E.O.) 12866 (Regulatory Planning and Review), E.O. 13563, and DOT Regulatory Policies and Procedures

The agency has considered the impact of this rulemaking action under E.O. 12866, E.O. 13563, and the Department of Transportation's regulatory procedures. This rulemaking is considered ''significant'' and was reviewed by the Office of Management and Budget under E.O. 12866, ''Regulatory Planning and Review.'' This final rule amends FMVSS No. 213 to adopt side impact performance requirements for child restraint systems designed to seat children in a weight range that includes weights up to 18.1 kg (40 lb). The requirements are set forth in FMVSS No. 213a, which specifies that the child restraints meet the requirements in a dynamic test simulating a vehicle-to-vehicle side impact. The side impact test of FMVSS No. 213a is additional to the current frontal impact tests of FMVSS No. 213.

NHTSA has prepared a final regulatory impact analysis (FRIA) that assesses the cost and benefits of this final rule.[288] The FRIA follows a preliminary RIA (PRIA) that was issued in support of the NPRM. The PRIA evaluated the countermeasures the agency tentatively determined may be needed for CRSs to meet the proposed performance requirements, and the benefits of those changes to the target population (children restrained in a CRS in a side impact). At the time of the PRIA, NHTSA believed that CRS manufacturers were already designing CRSs to address side impacts, and that generally only minor changes in design for forward- and rear-facing child restraints would be needed to enable child restraints to pass the test proposed in the NPRM. NHTSA tentatively determined that adding energy-absorbing padding to the CRS around the head area of the child and to the side structures (CRS side ''wings'') would likely be sufficient for CRSs to meet the proposed requirements. Accordingly, NHTSA estimated the costs and benefits of adding such padding to CRSs and requested comment on the issue.

The PRIA determined that the rule would be cost beneficial. NHTSA estimated that adding padding to the head area and wings of the CRS would reduce the likelihood of injuries by 3.7 fatalities and 41 injuries when all child restraints sold on the market met the proposed test criteria limits. These impacts would accrue to an economic benefit of $168.97 million at a 3 percent discount rate and $152.16 million at a 7 percent discount rate. NHTSA estimated the cost of the proposed rule

[284] Wietholter & Louden (2021).

[285] The Q3s dummy was adopted in a final rule published on November 3, 2020 (85 FR 69898). While the agency was developing the final rule, the agency realized that some of the Q3s dummies that had been delivered to CRS manufacturers and test facilities following the publication of the 2014 NPRM did not meet the specifications NHTSA had proposed for the dummy. The three-year lead time provides time to CRS manufacturers that had tested with those out-of-spec dummies to acquire dummies that meet the necessary qualifications, and reassess their CRSs as appropriate.

[286] MAP–21, Section 31502. NHTSA published an NPRM on January 23, 2015 (80 FR 3744). The RIN for the rulemaking is 2127–AL20. It may be tracked in the Unified Agenda of Regulatory and Deregulatory Actions.

[287] 49 U.S.C. 30113(d).

[288] The FRIA discusses issues relating to the estimated cost, benefits, and other impacts of this regulatory action. The FRIA is available in the docket for this final rule and may be obtained by downloading it or by contacting Docket Management at the address or telephone number provided at the beginning of this document.

at about $7.37 million, with $830,123 of that attributed to the cost of testing all child restraint models. The countermeasures were estimated to be larger wings (side structure) and padding with energy-absorption characteristics that would have a retail cost of approximately $0.58 per CRS.[289]

Discussion

As discussed at the beginning of this document, most of the comments supported the rulemaking proposal but a few did not. Comments in opposition or expressing concerns (from Dr. Baer, UMTRI and IIHS), were discussed at length in Section V of this preamble, as was NHTSA's response to those comments, and will not be repeated here. Several other individuals did not favor the proposal. Mr. Michael Montalbano expressed concern about the assumptions NHTSA used for the cost benefit analysis, stating that the NPRM indicated that 45 percent of child fatalities ''occurred where the child was not wearing [sic] a CRS'' and that side crashes resulting in fatalities to children in CRSs mainly occur in very severe, un-survivable side impact conditions. Mr. Montalbano asked: ''Will these side impact requirements be effective given that nearly half of child fatalities occur when CRSs are not used, and when CRSs are used, most children die from un-survivable side impact conditions?'' Conversely, a law student group stated that ''even though the benefits are not extreme, the benefits still outweigh the comparatively small costs associated with this additional testing.''

In response to Mr. Montalbano, NHTSA's cost benefit analysis assumes that children who do not use CRSs will not benefit from this rulemaking, as the standard applies to the CRS products, and does not require their use. However, as discussed previously, NHTSA is actively involved in increasing the use of CRSs and the correct use of restraint systems through other efforts. These efforts include developing and distributing training videos, producing public safety announcements and various campaigns directed to caregivers of children (in English, Spanish and other languages), leveraging all communication resources (such as social media and the NHTSA website) to provide information to parents and other caregivers, and expanding and supporting the child passenger safety technician (CPST) curriculum used to train and certify CRS fitting station technicians. Also, while this rulemaking does not directly address the 45 percent of fatalities that occur in very severe, un-survivable crashes, there may be some circumstances where a child might benefit from a CRS equipped with side impact protection by reducing the severity of the injuries in a severe crash.

UMTRI stated that costs involving the purchase of the Q3s ATD, new instrumentation (IR–TRACC) and buck manufacturing should be included in cost estimates as this adds to the yearly cost of testing. NHTSA conducted an analysis [290] to evaluate the annual cost of owning, operating, and maintaining the equipment and test devices needed for conducting the required tests and found that they would be very small when the costs are spread over the expected lifetime of these equipment and test devices.

Dorel stated its concern about a potential overlapping of a side impact rulemaking with the new FMVSS No. 213 on frontal impact protection, and the cost impacts of having to produce CRSs to rules that are introduced at different times. Dorel explained that it would need to evaluate the costs of a side impact test along any new proposed frontal impact test in conjunction with a new side impact test to fully comment on a cost analysis, and that without testing data of both side impact and frontal impact tests it could only estimate in broad terms at that time. Dorel added that in terms of redesign, retooling, and manufacturing startup costs, such an undertaking can range from product modification to product obsolescence. Dorel explained that a single ground up project of a single platform for a single set of tooling can range anywhere from $1.5–$2.5 million and that multiples of tooling can range $500 thousand upward to $1.5 million depending on the type and design of CRS. Dorel added that manufacturers would have to increase resources in a very short time and that typical development times from start to production in mass quantity could range from 18–24 months. Dorel argued that this could pose a major disruption of supply meeting customer demand, and that it prefers a synchronization of both standards so as to afford the design and development process and costs to consolidate to meet both new regulations.

In response to Dorel, we note that both this side impact final rule and a final rule upgrading the frontal impact seat assembly of FMVSS No. 213 (see NPRM, 85 FR 69388) are mandated by MAP–21. Nonetheless, while we believe the new side impact requirements adopted in this final rule will result in design changes to the CRS designs, NHTSA does not believe that the frontal impact changes will necessitate extensive CRS design changes as it appears most CRSs already meet the proposed rule's substantive requirements. (Some labeling changes may be needed.) Further, once NHTSA knows the timing of the frontal upgrade final rule, NHTSA will keep Dorel's concerns in mind to see if adjusting lead times would be appropriate and consistent with the Safety Act.

In developing the 2014 NPRM, NHTSA considered HIC15 requirements of 400 and 800 as alternatives to the preferred proposal of HIC15 of 570. The PRIA for the NPRM provided an assessment of benefits and costs of the HIC15 of 400 and 800 alternatives. Of the alternatives presented for HIC15, NHTSA has decided in this final rule on its preferred alternative of 570. This threshold value achieves a reasonable balance of practicability, safety, and cost. The HIC15 threshold of 570 is used in FMVSS No. 208, ''Occupant crash protection,'' for the 3-year-old child dummy. It is a scaled threshold based on FMVSS No. 208's criterion for the 50th percentile adult male dummy, which was adjusted to the 3-year-old using a process that accounts for differences in geometric size and material strength. HIC15 of 570 corresponds to an 11 percent risk of AIS 3+ injury and a 1.6 percent risk of fatality. The 570 scaled maximum will protect children in child restraints from an unreasonable risk of fatality and serious injury in side impacts.

Comparing the three alternatives (at the 7 percent discount rate), an 800 HIC15 limit results in: (a) many fewer equivalent lives saved than the 570 HIC15 limit (7.24 vs. 18.26); (b) higher cost per equivalent life saved ($488,000 vs. $242,000); and, (c) lower net benefits ($63 million vs. $162 million). Thus, on all three measures, 800 HIC15 achieves fewer NHTSA goals as compared to the 570 HIC15.

The 400 HIC15 alternative results in: (a) more equivalent lives saved than the 570 HIC15 limit (28.87 vs. 18.26); higher cost per equivalent life saved ($314,000 vs. $242,000); and, (c) higher net

[289] The agency believed that the cost of a compliance test (estimated at $1,300) spread over the number of units sold of that child restraint model was very small, especially when compared to the price of a child restraint. We estimated that 127 CRS models comprised the 11.3 million CRSs sold annually for children weighing up to 40 lb, which have an average model life of 5 years. Therefore, the annual cost of testing new CRS models was estimated to be $830,123. This testing cost, distributed among the 11.3 million CRSs sold annually, amounted to less than $0.01 per CRS.

[290] See the Final Regulatory Impact Analysis (FRIA) for more details on the analysis. The FRIA is available in the docket for this final rule and may be obtained by downloading it or by contacting Docket Management at the address or telephone number provided at the beginning of this document.

benefits ($250 million vs. $162 million). Thus, on two of the three measures, at first glance 400 HIC15 has appeal compared to the 570 HIC15 limit.

However, NHTSA is concerned about the effect of a 400 HIC15 limit on child restraint design and use and did not have information to address those concerns sufficiently. The agency is concerned that the cost estimates utilized may not take into account changes necessary to meet the 400 HIC15 limit. We believe that padding alone would be insufficient to meet a 400 HIC15 limit, and that a structural improvement to the side of the seats would be needed in addition to padding. We did not receive data on which to determine what structural or other changes would be needed to meet a 400 HIC15 reference, or whether the structural modifications can be implemented to meet the 400 HIC15 criterion at the cost we assumed.

Moreover, NHTSA is concerned that one method of potential compliance with a 400 HIC15 limit could cause unintended negative consequences not assessed in our estimate of costs. We believe that manufacturers could possibly increase padding to meet a 400 HIC15 limit. Thicker padding around the head area could reduce the space provided for the child's head, which may make the child restraint uncomfortable and confining for the child. The restricted space for the child's head could reduce the ability of the seated child to move his or her head freely, which could affect acceptability and use of the harness-equipped age-appropriate child restraints. Alternatively, if manufacturers decided to increase the thickness of the padding in the head area and widen the CRS to retain the current space between the child's head and side padding, the child restraint would have to be made wider and heavier. Again, this might affect the overall use of the child restraint. Considering all of these factors, NHTSA has chosen 570 HIC15 as the best overall reference value with known consequences that can be met with a reasonable thickness of padding alone.

This final rule reduces 3.7 fatalities and 41 (40.9) serious non-fatal injuries (MAIS [291] 4–5) annually (see Table 26 below).[292] The equivalent lives and the monetized benefits were estimated in accordance with guidance issued March 2021 by the Office of the Secretary [293] regarding the treatment of value of a statistical life in regulatory analyses. This final rule is estimated to save 15.1 equivalent lives annually. The monetized annual benefits of the rule at 3 and 7 percent discount rates are $169.0 million and $152.1 million, respectively (Table 27). The annual cost of this final rule is estimated at approximately $7.37 million. The countermeasures may include larger wings and padding with energy absorption characteristics that cost, on average, approximately $0.58 per CRS designed for children in a weight range that includes weights up to 40 lb (both forward-facing and rear-facing) (Table 28 below). The annual net benefits are estimated to be $144.8 million (7 percent discount rate) to $161.6 million (3 percent discount rate) as shown in Table 29. Because the rule is cost beneficial just by comparing costs to monetized economic benefits, and there is a net benefit, it is unnecessary to provide a net cost per equivalent life saved since no value would be provided by such an estimate.

TABLE 26—ESTIMATED BENEFITS

Fatalities	3.7
Non-fatal injuries (MAIS 1 to 5)	41 (40.9)

TABLE 27—ESTIMATED MONETIZED BENEFITS

[In millions of 2020 dollars]

	Economic benefits	Value of statistical life	Total benefits
3 Percent Discount Rate	$26.24	$142.72	$168.97
7 Percent Discount Rate	23.63	128.53	152.16

TABLE 28—ESTIMATED COSTS (2020 ECONOMICS)

Average cost per CRS designed for children in a weight range that includes weights up to 40 lb	$0.58
Total incremental CRS cost	6.54 million
Testing costs	830,123
Total annual cost	7.37 million

TABLE 29—ANNUALIZED COSTS AND BENEFITS

[In millions of 2020 dollars]

	Annualized costs	Annualized benefits	Net benefits
3% Discount Rate	$7.37	$168.97	$161.60
7% Discount Rate	7.37	152.16	144.79

[291] MAIS (Maximum Abbreviated Injury Scale) represents the maximum injury severity of an occupant based on the Abbreviated Injury Scale (AIS). AIS ranks individual injuries by body region on a scale of 1 to 6: 1=minor, 2=moderate, 3=serious, 4=severe, 5=critical, and 6=maximum (untreatable). MAIS 3+ injuries represent MAIS injuries at an AIS level of 3, 4, 5, or 6.

[292] NHTSA has developed a Final Regulatory Impact Analysis (FRIA) that discusses issues relating to the estimated costs, benefits, and other impacts of this regulatory action. The FRIA is available in the docket for this final rule and may be obtained by downloading it or by contacting Docket Management at the address or telephone number provided at the beginning of this document.

[293] *http://www.dot.gov/sites/dot.dev/files/docs/VSL%20Guidance%202013.pdf*

Regulatory Flexibility Act

Pursuant to the Regulatory Flexibility Act (5 U.S.C. 601 *et seq.,* as amended by the Small Business Regulatory Enforcement Fairness Act (SBREFA) of 1996) whenever an agency is required to publish a notice of proposed rulemaking or final rule, it must prepare and make available for public comment a regulatory flexibility analysis that describes the effect of the rule on small entities (*i.e.,* small businesses, small organizations, and small governmental jurisdictions), unless the head of an agency certifies the rule will not have a significant economic impact on a substantial number of small entities. Agencies must also provide a statement of the factual basis for this certification.

I certify that this final rule would not have a significant economic impact on a substantial number of small entities. NHTSA estimates there to be 29 manufacturers of child restraints, none of which are small businesses. Based on our fleet testing, we believe that most of the CRSs that are subject to the side impact requirements will meet the requirements without substantial modification. For rear-facing infant seats and forward-facing restraints with harnesses that need to be modified, the agency estimates that the average incremental costs to each child restraint system would be only $0.58 per unit to meet this final rule. This incremental cost will not constitute a significant economic impact. Further, the incremental cost is not significant compared to the retail price of a child restraint system for infants and toddlers, which is in the range of $45 to $350.

For belt-positioning seats that will not be able to meet the side impact requirements adopted by this final rule, the simplest course for a manufacturer will be to re-label the restraint prior to introduction into interstate commerce so that it is marketed for children not in a weight class that will subject the CRS to the rule's requirements. That is, the CRSs could be marketed as belt-positioning seats for children weighing more than 18.1 kg (40 lb), instead of for children weighing above 13.6 kg (30 lb).[294]

The agency believes that the cost of conducting the test described in this final rule (estimated at $1,543) spread over the number of units sold of that child restraint model will be very small, especially when compared to the price of a child restraint. We estimate that 127 CRS models comprise the 11.3 million CRSs that include recommended weights for children weighing up to 40 pounds. The average model life is estimated to be 5 years. Therefore, we estimate that, assuming manufacturers will be conducting the dynamic test specified in this final rule to certify their child restraints to the new side impact requirements, the annual cost of testing new CRS models will be $830,123. This testing cost, distributed among the 11.3 million CRSs sold annually with an average model life of 5 years, will be less than $0.01 per CRS.

National Environmental Policy Act

NHTSA has analyzed this final rule for the purposes of the National Environmental Policy Act and determined that it will not have any significant impact on the quality of the human environment.

Executive Order 13132 (Federalism)

NHTSA has examined this final rule pursuant to Executive Order 13132 (64 FR 43255, August 10, 1999) and concluded that no additional consultation with States, local governments or their representatives is mandated beyond the rulemaking process. The agency has concluded that the rulemaking will not have sufficient federalism implications to warrant consultation with State and local officials or the preparation of a federalism summary impact statement. The final rule will not have ''substantial direct effects on the States, on the relationship between the national government and the States, or on the distribution of power and responsibilities among the various levels of government.''

NHTSA rules can preempt in two ways. First, the National Traffic and Motor Vehicle Safety Act contains an express preemption provision: When a motor vehicle safety standard is in effect under this chapter, a State or a political subdivision of a State may prescribe or continue in effect a standard applicable to the same aspect of performance of a motor vehicle or motor vehicle equipment only if the standard is identical to the standard prescribed under this chapter. 49 U.S.C. Section 30103(b)(1). It is this statutory command by Congress that preempts any non-identical State legislative and administrative law addressing the same aspect of performance. The express preemption provision described above is subject to a savings clause under which ''[c]ompliance with a motor vehicle safety standard prescribed under this chapter does not exempt a person from liability at common law.'' 49 U.S.C. Section 30103(e). Pursuant to this provision, State common law tort causes of action against motor vehicle manufacturers that might otherwise be preempted by the express preemption provision are generally preserved.

However, the Supreme Court has recognized the possibility, in some instances, of implied preemption of such State common law tort causes of action by virtue of NHTSA's rules, even if not expressly preempted. This second way that NHTSA rules can preempt is dependent upon there being an actual conflict between an FMVSS and the higher standard that would effectively be imposed on motor vehicle manufacturers if someone obtained a State common law tort judgment against the manufacturer, notwithstanding the manufacturer's compliance with the NHTSA standard. Because most NHTSA standards established by an FMVSS are minimum standards, a State common law tort cause of action that seeks to impose a higher standard on motor vehicle manufacturers will generally not be preempted. However, if and when such a conflict does exist—for example, when the standard at issue is both a minimum and a maximum standard—the State common law tort cause of action is impliedly preempted. See *Geier* v. *American Honda Motor Co.,* 529 U.S. 861 (2000).

Pursuant to Executive Order 13132 and 12988, NHTSA has considered whether this final rule could or should preempt State common law causes of action. The agency's ability to announce its conclusion regarding the preemptive effect of one of its rules reduces the likelihood that preemption will be an issue in any subsequent tort litigation. To this end, the agency has examined the nature (*e.g.,* the language and structure of the regulatory text) and objectives of this final rule and finds that this rule, like many NHTSA rules, would prescribe only a minimum safety standard. As such, NHTSA does not intend this final rule to preempt state tort law that would effectively impose a higher standard on motor vehicle manufacturers than that established by this final rule. Establishment of a higher standard by means of State tort law will not conflict with the minimum standard adopted here. Without any conflict, there could not be any implied preemption of a State common law tort cause of action.

Civil Justice Reform

With respect to the review of the promulgation of a new regulation, section 3(b) of Executive Order 12988,

[294] Currently, FMVSS No. 213 prohibits manufacturers from recommending belt-positioning seats for children weighing less than 13.6 kg (30 lb). NHTSA has proposed increasing this weight limit to 18.1 kg (40 lb) (85 FR 69388). If adopted, the weight threshold would also have the effect of excluding booster seats from the application of FMVSS No. 213a.

''Civil Justice Reform'' (61 FR 4729, February 7, 1996) requires that Executive agencies make every reasonable effort to ensure that the regulation: (1) Clearly specifies the preemptive effect; (2) clearly specifies the effect on existing Federal law or regulation; (3) provides a clear legal standard for affected conduct, while promoting simplification and burden reduction; (4) clearly specifies the retroactive effect, if any; (5) adequately defines key terms; and (6) addresses other important issues affecting clarity and general draftsmanship under any guidelines issued by the Attorney General. This document is consistent with that requirement.

Pursuant to this Order, NHTSA notes as follows. The preemptive effect of this final rule is discussed above. NHTSA notes further that there is no requirement that individuals submit a petition for reconsideration or pursue other administrative proceeding before they may file suit in court.

Paperwork Reduction Act (PRA)

Under the PRA of 1995, a person is not required to respond to a collection of information by a Federal agency unless the collection displays a valid OMB control number. There are no ''collections of information'' (as defined at 5 CFR 1320.3(c)) in this final rule.

National Technology Transfer and Advancement Act

Under the National Technology Transfer and Advancement Act of 1995 (NTTAA) (Pub. L. 104–113), all Federal agencies and departments shall use technical standards that are developed or adopted by voluntary consensus standards bodies, using such technical standards as a means to carry out policy objectives or activities determined by the agencies and departments. Voluntary consensus standards are technical standards (*e.g.,* materials specifications, test methods, sampling procedures, and business practices) that are developed or adopted by voluntary consensus standards bodies, such as the International Organization for Standardization (ISO) and the Society of Automotive Engineers (SAE). The NTTAA directs us to provide Congress, through OMB, explanations when we decide not to use available and applicable voluntary consensus standards.

As explained above in this preamble and in the January 28, 2014 NPRM preceding this final rule, NHTSA reviewed the procedures and regulations developed globally to dynamically test child restraints in the side impact environment. Except for the Takata test procedure, the procedures and regulations did not replicate all of the dynamic elements of a side crash that we sought to include in the side impact test, or were not sufficiently developed for further consideration.

NHTSA considered AS/NZS 1754 for implementation into FMVSS No. 213 but did not find it acceptable. The test does not simulate an intruding door, which is an important component in the side impact environment. In addition, AS/NZS 1754 does not account for a longitudinal component, which we also believe is an important characteristic of a side crash. (As noted above, NHTSA's 2002 ANPRM, *supra,* was based on AS/NZS 1754. Commenters to the ANPRM believed that a dynamic test should account for some degree of vehicle intrusion into the occupant compartment.) Australia's CREP test also was limited by its lack of an intruding door, which is a component that is important in the side impact environment.

Test procedures from other countries and entities were also too limited. Germany's ADAC test procedure lacks an intruding door. While the ISO/TNO test procedure accounts for the deceleration and intrusion experienced by a car in a side impact crash, one of its limitations is that the angular velocity of the hinged door is difficult to control, which results in poor repeatability. In addition, these methods do not include a longitudinal velocity component to the intruding door, which is present in most side impacts and which NHTSA sought to replicate in the FMVSS No. 213a test. NHTSA considered the EU's test procedure but decided not to pursue it, since the test is of lower severity than the crash conditions the agency sought to replicate and of lower severity than the FMVSS No. 214 MDB side impact crash test of a small passenger vehicle. Moreover, the test procedure is only intended for evaluating CRSs with rigid ISOFIX attachments, which are not prevalent in the U.S. Further, the sliding anchors do not seem to produce a representative interaction between the door and CRS during a side impact, and may introduce variability in the test results.

NPACS completed a test procedure in 2006. The NPACS final approach is comparable to the International Standards Organization (ISO) side impact efforts which include a rotating hinged door to simulate door intrusion into the CRS. As discussed in the NPRM, the rotating hinged door procedures account for the deceleration and intrusion experienced by a car in a side impact crash but one of its limitations is that the angular velocity of the hinged door is difficult to control resulting in poor repeatability.[295] In addition, these methods do not include a longitudinal velocity component to the intruding door, which is present in most side impact crashes. The NPACS procedure also specifies a sled velocity change corridor with a longer duration than desired. NHTSA found that for a small vehicle FMVSS No. 214 MDB test, the change in velocity duration was between 40–50 milliseconds, while NPACS has a duration of 70–75 milliseconds. While the agency did not evaluate these procedures, the agency did not find them compelling enough to pursue or change from the selected Takata sled-on-sled method, which has proven to be repeatable and reproducible and can be adapted to be done in an acceleration type or a deceleration type sled system.

NHTSA based the side impact test on a test procedure that was developed in the industry. In so doing, NHTSA saved agency resources by making use of pertinent technical information that was already available. This effort to save resources is consistent with the NTTAA's goal of reducing when possible the agency's cost of developing its own standards.

Unfunded Mandates Reform Act

Section 202 of the Unfunded Mandates Reform Act of 1995 (UMRA), Public Law 104–4, requires Federal agencies to prepare a written assessment of the costs, benefits, and other effects of proposed or final rules that include a Federal mandate likely to result in the expenditure by State, local, or tribal governments, in the aggregate, or by the private sector, of more than $100 million annually (adjusted for inflation with base year of 1995). Adjusting this amount by the implicit gross domestic product price deflator for the year 2020 results in $158 million (113.635/71.868 = 1.581). This final rule does not result in a cost of $158 million or more to either State, local, or tribal governments, in the aggregate, or the private sector. Thus, this rule is not subject to the requirements of sections 202 of the UMRA.

Executive Order 13609 (Promoting International Regulatory Cooperation)

The policy statement in section 1 of E.O. 13609 provides, in part:

The regulatory approaches taken by foreign governments may differ from those taken by

[295] Sandner, V., Ratzek, A., Kolke, R., Kraus, W., Lang, M. ''New Programm for the assessment of child restraint systems (NPACS)—Development/research/results—First step for future activities?'' Paper Number 09–0298.

U.S. regulatory agencies to address similar issues. In some cases, the differences between the regulatory approaches of U.S. agencies and those of their foreign counterparts might not be necessary and might impair the ability of American businesses to export and compete internationally. In meeting shared challenges involving health, safety, labor, security, environmental, and other issues, international regulatory cooperation can identify approaches that are at least as protective as those that are or would be adopted in the absence of such cooperation. International regulatory cooperation can also reduce, eliminate, or prevent unnecessary differences in regulatory requirements.

NHTSA requested public comment on the ''regulatory approaches taken by foreign governments'' concerning the subject matter of this rulemaking but received no comments on this issue. In the discussion above on the NTTAA, we explained that we reviewed the procedures and regulations developed globally to test child restraints dynamically in the side impact environment and found the Takata test procedure to be the most suitable for our purposes.

Incorporation by Reference

Under regulations issued by the Office of the Federal Register (1 CFR 51.5(a)), an agency, as part of a final rule that includes material incorporated by reference, must summarize in the preamble of the final rule the material it incorporates by reference and discuss the ways the material is reasonably available to interested parties or how the agency worked to make materials available to interested parties.

In this final rule, NHTSA incorporates by reference material entitled, ''Parts List and Drawings, NHTSA Standard Seat Assembly; FMVSS No. 213a—Side impact No. NHTSA–213a–2021, CHILD SIDE IMPACT SLED,'' dated December 2021, that consists of engineering drawings and specifications for the side impact seat assembly (SISA) that NHTSA will use to assess the compliance of child restraints with Standard No. 213a. The SISA consists of a sliding seat, with one seating position, and a simulated door assembly.

NHTSA has placed a copy of the material in the docket for this final rule. Interested persons can download a copy of the material or view the material online by accessing *www.Regulations.gov,* telephone 1–877–378–5457, or by contacting NHTSA's Chief Counsel's Office at the phone number and address set forth in the **FOR FURTHER INFORMATION** section of this document. The material is also available for inspection at the Department of Transportation, Docket Operations, Room W12–140, 1200 New Jersey Avenue SE, Washington, DC, Telephone: 202–366–9826. This final rule also incorporates SAE Recommended Practice J211/1, revised March 1995, ''Instrumentation for Impact Tests-Part 1—Electronic Instrumentation,'' This SAE standard is already incorporated in 49 CFR 571.5(l)(4). The SAE J211/1 standard provides guidelines and recommendations for techniques of measurements used in impact tests to achieve uniformity in instrumentation practice and in reporting results. Signals from impact tests have to be filtered following the standard's guidelines to eliminate noise from sensor signals. Following J211/1 guidelines provides a basis for meaningful comparisons of test results from different sources. The SAE material is available for review at NHTSA and is available for purchase from SAE International.

Formatting

Note: Due to new **Federal Register** formatting guidelines, the ''figure number and title'' labels in the regulatory text now appear directly above the corresponding figure instead of below the corresponding figure.

Regulation Identifier Number

The Department of Transportation assigns a regulation identifier number (RIN) to each regulatory action listed in the Unified Agenda of Federal Regulations. The Regulatory Information Service Center publishes the Unified Agenda in April and October of each year. You may use the RIN contained in the heading at the beginning of this document to find this action in the Unified Agenda.

Plain Language

Executive Order 12866 requires each agency to write all rules in plain language. Application of the principles of plain language includes consideration of the following questions:

- Have we organized the material to suit the public's needs?
- Are the requirements in the rule clearly stated?
- Does the rule contain technical language or jargon that isn't clear?
- Would a different format (grouping and order of sections, use of headings, paragraphing) make the rule easier to understand?
- Would more (but shorter) sections be better?
- Could we improve clarity by adding tables, lists, or diagrams?
- What else could we do to make the rule easier to understand?

If you have any responses to these questions, please write to us with your views.

List of Subjects in 49 CFR Part 571

Imports, Motor vehicle safety, Motor vehicles, and Tires; Incorporation by reference.

In consideration of the foregoing, NHTSA amends 49 CFR part 571 as set forth below.

PART 571—FEDERAL MOTOR VEHICLE SAFETY STANDARDS

■ 1. The authority citation for Part 571 continues to read as follows:

Authority: 49 U.S.C. 322, 30111, 30115, 30117 and 30166; delegation of authority at 49 CFR 1.95.

■ 2. Section 571.5 is amended by:
■ a. Revising paragraph (a);
■ b; Adding paragraph (k)(5);
■ c. Revising paragraph (l)(4); and
■ d. In addition to the previous amendments, remove the text ''http://'' and add in its place the text ''https://'' wherever it appears throughout this section.

The revisions and addition read as follows:

§ 571.5 Matter incorporated by reference.

(a) Certain material is incorporated by reference into this part with the approval of the Director of the Federal Register in accordance with 5 U.S.C. 552(a) and 1 CFR part 51. To enforce any edition other than that specified in this section, the National Highway Traffic Safety Administration (NHTSA) must publish a document in the **Federal Register** and the material must be available to the public. All approved incorporation by reference (IBR) material is available for inspection at NHTSA and at the National Archives and Records Administration (NARA). Contact NHTSA at: NHTSA, 1200 New Jersey Avenue SE, Washington, DC 20590, (202) 366–2588, website: *https://www.nhtsa.gov/about-nhtsa/electronic-reading-room.* For information on the availability of this material at NARA, email: *fr.inspection@nara.gov,* or go to: *www.archives.gov/federal-register/cfr/ibr-locations.html.* The material may be obtained from the sources in the following paragraphs of this section.

* * * * *

(k) * * *

(5) ''Parts List and Drawings, NHTSA Standard Seat Assembly; FMVSS No. 213a—Side impact No. NHTSA–213a-2021, CHILD SIDE IMPACT SLED'' dated December 2021; into § 571.213a.

(l) * * *

(4) SAE Recommended Practice J211/1, ''Instrumentation for Impact Tests-

Part 1—Electronic Instrumentation''; revised March 1995; into §§ 571.202a; 571.208; 571.213a; 571.218; 571.403.

* * * * *

■ 3. Section 571.213 is amended by adding paragraph S5(g) to read as follows:

§ 571.213 Standard No. 213; Child restraint systems.

* * * * *

S5 * * *

(g) Each add-on child restraint system manufactured for use in motor vehicles, that is recommended for children in a weight range that includes weights up to 18 kilograms (40 pounds), or for children in a height range that includes heights up to 1100 millimeters, shall meet the requirements in this standard and the additional side impact protection requirements in Standard No. 213a (§ 571.213a). Excepted from Standard No. 213a are harnesses and car beds.

* * * * *

■ 4. Section 571.213a is added to read as follows:

§ 571.213a Standard No. 213a; Child restraint systems—side impact protection.

S1. *Scope.* This standard specifies side impact protection requirements for child restraint systems recommended for children in a weight range that includes weights up to 18 kilograms (40 pounds) or by children in a height range that includes heights up to 1100 millimeters (43 inches).

S2. *Purpose.* The purpose of this standard is to reduce the number of children killed or injured in motor vehicle side impacts. Each child restraint system subject to this standard shall also meet all applicable requirements in FMVSS No. 213 (§ 571.213).

S3. *Application.* This standard applies to add-on child restraint systems that are either recommended for use by children in a weight range that includes weights up to 18 kilograms (40 pounds) *regardless of height,* or by children in a height range that includes heights up to 1100 millimeters *regardless of weight,* except for car beds and harnesses.

S4. *Definitions.*

Add-on child restraint system means any portable child restraint system.

Belt-positioning seat means a child restraint system that positions a child on a vehicle seat to improve the fit of a vehicle Type II belt system on the child and that lacks any component, such as a belt system or a structural element, designed to restrain forward movement of the child's torso in a forward impact.

Car bed means a child restraint system designed to restrain or position a child in the supine or prone position on a continuous flat surface.

Child restraint anchorage system is defined in S3 of FMVSS No. 225 (§ 571.225).

Child restraint system is defined in S4 of FMVSS No. 213 (§ 571.213).

Contactable surface means any child restraint system surface (other than that of a belt, belt buckle, or belt adjustment hardware) that may contact any part of the head or torso of the appropriate test dummy, specified in S7, when a child restraint system is tested in accordance with S6.1.

Harness means a combination pelvic and upper torso child restraint system that consists primarily of flexible material, such as straps, webbing or similar material, and that does not include a rigid seating structure for the child.

Rear-facing child restraint system means a child restraint system that positions a child to face in the direction opposite to the normal (forward) direction of travel of the motor vehicle.

Seat orientation reference line or *SORL* means the horizontal line through Point Z as illustrated in Figure 1 to § 571.213a.

Tether anchorage is defined in S3 of FMVSS No. 225 (§ 571.225).

Tether strap is defined in S3 of FMVSS No. 225 (§ 571.225).

Torso means the portion of the body of a seated anthropomorphic test dummy, excluding the thighs, that lies between the top of the child restraint system seating surface and the top of the shoulders of the test dummy.

S5. *Requirements.* (a) Each child restraint system subject to this section shall meet the requirements in this section when, as specified, tested in accordance with S6 and this paragraph. Each child restraint system shall meet the requirements when oriented in each direction recommended by the manufacturer (*i.e.,* forward, rearward), using any of the seat back angle adjustment positions and restraint belt routing positions designated for that direction, pursuant to S5.6 of FMVSS No. 213 (§ 571.213), and tested with the test dummy specified in S7 of this section.

(b) Each child restraint system subject to this section shall also meet all applicable requirements in FMVSS No. 213 (§ 571.213).

S5.1 *Dynamic performance.*

S5.1.1 *Child restraint system integrity.* When tested in accordance with S6.1, each child restraint system shall meet the requirements of paragraphs (a) through (c) of this section.

(a) With any padding or other flexible overlay material removed, exhibit no complete separation of any load bearing structural element and no partial separation exposing either surfaces with a radius of less than 6 millimeters or surfaces with protrusions greater than 9 millimeters above the immediate adjacent surrounding contactable surface of any structural element of the child restraint system.

(b)(1) If adjustable to different positions, remain in the same adjustment position during the testing that it was in immediately before the testing, except as otherwise specified in paragraph (b)(2).

(2)(i) Subject to paragraph (b)(2)(ii), a rear-facing child restraint system may have a means for repositioning the seating surface of the system that allows the system's occupant to move from a reclined position to an upright position and back to a reclined position during testing.

(ii) No opening that is exposed and is larger than 6 millimeters before the testing shall become smaller during the testing as a result of the movement of the seating surface relative to the child restraint system as a whole.

(c) If a front facing child restraint system, not allow the angle between the system's back support surfaces for the child and the system's seating surface to be less than 45 degrees at the completion of the test.

S5.1.2 *Injury criteria.* When tested in accordance with S6.1 and with the test dummy specified in S7, each child restraint system that, in accordance with S5.5.2 of Standard No. 213 (§ 571.213), is recommended for use by children whose mass is more than 13.6 kilograms or whose height is more than 870 mm shall—

(a) Limit the resultant acceleration at the location of the accelerometer mounted in the test dummy head as specified in Part 572 such that, for any two points in time, t1 and t2, during the event which are separated by not more than a 15 millisecond time interval and where t1 is less than t2, the maximum calculated head injury criterion (HIC) shall not exceed 570, determined using the resultant head acceleration at the center of gravity of the dummy head, a_r, expressed as a multiple of g (the acceleration of gravity), calculated using the expression:

$$HIC = \left[\frac{1}{t_2 - t_1}\int_{t_1}^{t_2} a_r\, dt\right]^{2.5} (t_2 - t_1)$$

(b) The maximum chest compression (or deflection) from the output of the thoracic InfraRed Telescoping Rod for Assessment of Chest Compression (IR–TRACC) shall not exceed 23 millimeters.

S5.1.3 *Occupant containment.* When tested in accordance with S6.1 and the requirements specified in this section, each child restraint system recommended for use by children in a specified mass range that includes any children having a mass greater than 5 kilograms but not greater than 13.6 kilograms (30 lb), shall retain the test dummy's head such that there is no direct contact of the head to any part of the side impact seat assembly described in S6.1.1(a).

S5.1.4 *Protrusion limitation.* Any portion of a rigid structural component within or underlying a contactable surface shall, with any padding or other flexible overlay material removed, have a height above any immediately adjacent restraint system surface of not more than 9 millimeters and no exposed edge with a radius of less than 6 millimeters.

S5.1.5 *Belt buckle release.* Any buckle in a child restraint system belt assembly designed to restrain a child using the system shall:

(a) When tested in accordance with the appropriate sections of S6.2, after the dynamic test of S6.1, release when a force of not more than 71 Newtons is applied.

(b) Not release during the testing specified in S6.1.

S5.1.6 *Installation.* Each add-on child restraint system shall be capable of meeting the requirements of this standard when installed solely by each of the means indicated in the following table:

TABLE 1 TO S5.1.6

Type of add-on child restraint system	Means of installation			
	Type II seat belt assembly	Type II seat belt assembly plus a tether if needed	Lower anchorages of the child restraint anchorage system	Lower anchorages of the child restraint anchorage system plus a tether if needed
Rear-facing restraints	X		X	
Forward-facing restraints		X		X

S6. *Test conditions and procedures.*

S6.1 *Dynamic side impact test for child restraint systems.* The test conditions and test procedure for the dynamic side impact test are specified in S6.1.1 and S6.1.2, respectively.

S6.1.1 *Test conditions.*

(a) *Test device.* (1) The test device is a side impact seat assembly (SISA) consisting of a sliding seat, with one seating position, and a simulated door assembly as described in ''NHTSA Standard Seat Assembly; FMVSS No. 213a—Side impact No. NHTSA–213a-2021'' (incorporated by reference, see § 571.5). The simulated door assembly is rigidly attached to the floor of the SISA and the sliding seat is mounted on rails to allow it to move relative to the floor of the SISA in the direction perpendicular to the SORL. The SISA is mounted on a dynamic test platform so that the SORL of the seat is 10 +/ − 0.1 degrees from the perpendicular direction of the test platform travel.

(2) As illustrated in the SISA drawing package, attached to the seat belt anchorage points provided on the SISA is a Type II seat belt assembly. These seat belt assemblies are certified to meet the requirements of Standard No. 209 (§ 571.209) and have webbing with a width of not more than 2 inches, and are attached to the anchorage points without the use of retractors or reels of any kind. As illustrated in the SISA drawing package, attached to the SISA is a child restraint anchorage system conforming to the specifications of Standard No. 225 (§ 571.225).

(b) Accelerate the test platform to achieve a relative velocity of 31.3 ± 0.64 km/h in the direction perpendicular to the SORL between the SISA sliding seat and the door assembly at the time they come in contact (time = T_0). The front face of the armrest on the door is 38 ± 6 millimeters from the edge of the seat towards the SORL at time = T_0. The test platform velocity in the direction perpendicular to the SORL during the time of interaction of the door with the child restraint system is no lower than 2.5 km/h less than its velocity at time = T_0.

(c) The sliding seat acceleration perpendicular to the SORL is any pulse within the acceleration corridor shown in Figure 3 and the change in relative velocity perpendicular to the SORL between the SISA sliding seat and the door assembly is any velocity within the relative velocity corridor shown in Figure 4.

(d) Performance tests under S6.1 are conducted at any ambient temperature from 20.6 °C to 22.2 °C and at any relative humidity from 10 percent to 70 percent.

(e) The child restraint shall meet the requirements of S5 when oriented in each direction recommended by the manufacturer (*i.e.,* forward, rearward), using any of the seat back angle adjustment positions and restraint belt routing positions designated for that direction, pursuant to S5.6 of FMVSS No. 213 (§ 571.213), and tested with the test dummy specified in S7 of this section.

S6.1.2 *Dynamic test procedure.*

(a) The child restraint centerline is positioned 300 ± 2 millimeters from the SISA sliding seat edge (impact side). The child restraint system is attached in any of the following manners, at NHTSA's option.

(1) Install the child restraint system using the child restraint anchorage system in accordance with the manufacturer's instructions provided with the child restraint system pursuant to S5.6 of Standard No. 213 (§ 571.213),

except as provided in this paragraph. For forward-facing restraints, attach the tether strap, if provided, to the tether anchorage on the SISA. No supplemental device is used to install the child restraint system. Tighten belt systems of the lower anchorage attachments used to attach the restraint to the SISA sliding seat to any tension of not less than 53.5 Newtons and not more than 67 Newtons. Tighten the belt of the top tether attachment used to attach the restraint to the SISA sliding seat to any tension of not less than 45 Newtons and not more than 53.5 Newtons.

(2) For forward-facing and rear-facing child restraint systems, install the child restraint system using the Type II belt system in accordance with the manufacturer's instructions provided with the child restraint system pursuant to S5.6 of Standard No. 213 (§ 571.213), except as provided in this paragraph. For forward-facing restraints, attach the top tether strap, if provided, to the top tether anchorage on the SISA. For all child restraints, no supplemental device to install the child restraint system is used. Tighten the Type II belt used to attach the restraint to the SISA sliding seat to any tension of not less than 53.5 Newtons and not more than 67 Newtons. Tighten the belt of the top tether attachment used to attach the forward-facing restraint to the SISA sliding seat to any tension of not less than 45 Newtons and not more than 53.5 Newtons. Rear-facing infant carriers with a detachable base shall only be tested using the base.

(3) For rear-facing restraints, install the child restraint system using only the lower anchorages of the child restraint anchorage system in accordance with the manufacturer's instructions provided with the child restraint system pursuant to S5.6 of Standard No. 213 (§ 571.213). No tether strap is used. No supplemental device is used to install the child restraint system. Tighten belt systems used to attach the restraint to the SISA-sliding seat to any tension of not less than 53.5 Newtons and not more than 67 Newtons. Rear-facing infant carriers with a detachable base shall only be tested using the base.

(b) Select any dummy specified in S7 for testing child restraint systems for use by children of the heights or weights for which the system is recommended in accordance with S5.5 of Standard No. 213 (§ 571.213). The dummy is assembled, clothed and prepared as specified in S8 and part 572 of this chapter, as appropriate.

(c) The dummy is placed and positioned in the child restraint system as specified in S9. Attach the child restraint belts used to restrain the child within the system, if appropriate, as specified in S9.

(d) Shoulder and pelvic belts that directly restrain the dummy are adjusted as follows: Tighten the belt system used to restrain the child within the child restraint system to any tension of not less than 9 Newtons and not more than 18 Newtons on the webbing at the top of each dummy shoulder and the pelvic region. Tighten the belt systems used to attach the restraint to the SISA sliding seat to any tension of not less than 53.5 Newtons and not more than 67 Newtons.

(e) Accelerate the test platform in accordance with S6.1.1(b).

(f) All instrumentation and data reduction is in conformance with SAE J211/1 (1995) (incorporated by reference, see § 571.5).

S6.2 *Buckle release test procedure.*

(a) After completion of the testing specified in S6.1 and before the buckle is unlatched, tie a self-adjusting sling to each wrist and ankle of the test dummy in the manner illustrated in Figure 4 to Standard No. 213 (§ 571.213), without disturbing the belted dummy and the child restraint system.

(b) Pull the sling that is tied to the dummy restrained in the child restraint system and apply the following force: 90 Newtons for a system tested with a 12-month-old dummy; 200 Newtons for a system tested with a 3-year-old dummy. For an add-on child restraint, the force is applied in the manner illustrated in Figure 4 to Standard No. 213 (§ 571.213) and by pulling the sling horizontally and parallel to the SORL of the SISA.

(c) While applying the force specified in S6.2(b), and using the device shown in Figure 8 of Standard No. 213 (§ 571.213) for pushbutton-release buckles, apply the release force in the manner and location specified in S6.2.1 of Standard No. 213 (§ 571.213), for that type of buckle. Measure the force required to release the buckle.

S7 *Test dummies.*

S7.1 *Dummy selection.* At NHTSA's option, any dummy specified in S7.1(a) or S7.1(b) may be selected for testing child restraint systems for use by children of the height or mass for which the system is recommended in accordance with S5.5 of Standard No. 213 (§ 571.213). A child restraint that meets the criteria in two or more of the following paragraphs may be tested with any of the test dummies specified in those paragraphs.

(a) A child restraint that is recommended by its manufacturer in accordance with S5.5 of Standard No. 213 (§ 571.213) for use either by children in a specified mass range that includes any children having a mass greater than 5 kilograms but not greater than 13.6 kilograms, or by children in a specified height range that includes any children whose height is greater than 650 millimeters but not greater than 870 millimeters, is tested with a CRABI 12-month-old test dummy conforming to 49 CFR part 572 subpart R.

(b) A child restraint that is recommended by its manufacturer in accordance with S5.5 of Standard No. 213 (§ 571.213) for use either by children in a specified mass range that includes any children having a mass greater than 13.6 kilograms but not greater than 18 kilograms, or by children in a specified height range that includes any children whose height is greater than 870 millimeters but not greater than 1100 millimeters, is tested with a 3-year-old test dummy (Q3s) conforming to 49 CFR part 572 subpart W.

S8 *Dummy clothing and preparation.*

S8.1 *Type of clothing.*

(a) *12-month-old dummy (CRABI) (49 CFR part 572, subpart R).* When used in testing under this standard, the dummy specified in 49 CFR part 572, subpart R, is clothed in a cotton-polyester based tight fitting sweat shirt with long sleeves and ankle long pants whose combined weight is not more than 0.25 kilograms.

(b) *3-year-old side impact dummy (Q3s) (49 CFR part 572, subpart W).* When used in testing under this standard, the dummy specified in 49 CFR part 572, subpart W, is clothed as specified in that subpart, except without shoes.

S8.2 *Preparing dummies.* When using the Q3s dummy, install the IR–TRACC on the test impact side according to 49 CFR part 572, subpart W. Before being used in testing under this standard, test dummies must be conditioned at any ambient temperature from 20.6° to 22.2 °C and at any relative humidity from 10 percent to 70 percent, for at least 4 hours.

S9 *Positioning the dummy and attaching the belts used to restrain the child within the child restraint system and/or to attach the system to the SISA sliding seat.*

S9.1 *12-month-old dummy (CRABI) (49 CFR part 572, subpart R).* Position the test dummy according to the instructions for child positioning that the manufacturer provided with the child restraint system under S5.6.1 or S5.6.2 of Standard No. 213 (§ 571.213), while conforming to the following:

(a) When testing rear-facing child restraint systems, place the 12-month-old dummy in the child restraint system so that the back of the dummy torso contacts the back support surface of the

system. Attach all appropriate child restraint belts used to restrain the child within the child restraint system and tighten them as specified in S6.1.2 of this standard. Attach all appropriate belts used to attach the child restraint system to the SISA sliding seat and tighten them as specified in S6.1.2.

(b) When testing forward-facing child restraint systems, extend the dummy's arms vertically upwards and then rotate each arm downward toward the dummy's lower body until the arm contacts a surface of the child restraint system or the SISA. Ensure that no arm is restrained from movement in other than the downward direction, by any part of the system or the belts used to anchor the system to the SISA sliding seat.

(c) When testing forward-facing child restraint systems, extend the arms of the 12-month-old test dummy as far as possible in the upward vertical direction. Extend the legs of the test dummy as far as possible in the forward horizontal direction, with the dummy feet perpendicular to the centerline of the lower legs. Using a flat square surface with an area of 2,580 square mm, apply a force of 178 Newtons, perpendicular to the plane of the back of the standard seat assembly, first against the dummy crotch and then at the dummy thorax in the midsagittal plane of the dummy. Attach all appropriate child restraint belts used to restrain the child within the child restraint system and tighten them as specified in S6.1.2(d). Attach all appropriate belts used to attach the child restraint system (per S5.1.6) to the SISA sliding seat and tighten them as specified in S6.1.2.

(d) After the steps specified in paragraph (c), rotate each dummy limb downwards in the plane parallel to the dummy's midsagittal plane until the limb contacts a surface of the child restraint system or the standard seat assembly. Position the limbs, if necessary, so that limb placement does not inhibit torso or head movement in tests conducted under S6.

S9.2 *3-year-old side impact dummy (Q3s) (49 CFR part 572, subpart W) in forward-facing child restraints.* Position the test dummy according to the instructions for child positioning that the restraint manufacturer provided with the child restraint system in accordance with S5.6.1 or S5.6.2 of Standard No. 213 (§ 571.213), while conforming to the following:

(a) Holding the test dummy torso upright until it contacts the child restraint system's design seating surface, place the test dummy in the seated position within the child restraint system with the midsagittal plane of the test dummy head coincident with the center of the child restraint system.

(b) Extend the arms of the test dummy as far as possible in the upward vertical direction. Extend the legs of the dummy as far as possible in the forward horizontal direction, with the dummy feet perpendicular to the center line of the lower legs.

(c) For a child restraint system with a fixed or movable surface, position each movable surface in accordance with the instructions that the manufacturer provided under S5.6.1 or S5.6.2 of Standard No. 213 (§ 571.213). For forward-facing restraints, attach all appropriate child restraint belts used to restrain the child within the child restraint system and tighten them as specified in S6.1.2(d). Attach all appropriate belts or lower anchorage attachments used to attach the child restraint system to the SISA or to restrain the child and tighten them as specified in S6.1.2. For belt-positioning seats, attach all appropriate vehicle belts used to restrain the child within the child restraint system and tighten them as specified in S6.1.2(d).

(d) After the steps specified in paragraph (c) of this section, rotate each of the dummy's legs downwards in the plane parallel to the dummy's midsagittal plane until the limb contacts a surface of the child restraint or the SISA. Rotate each of the dummy's arms downwards in the plane parallel to the dummy's midsagittal plane until the arm is engaged on the detent that positions the arm at a 25 degree angle with respect to the thorax.

S9.3 *3-year-old side impact dummy (Q3s) (49 CFR part 572, subpart W) in rear-facing child restraints.* Position the test dummy according to the instructions for child positioning that the restraint manufacturer provided with the child restraint system in accordance with S5.6.1 or S5.6.2 of Standard No. 213 (§ 571.213), while conforming to the following:

(a) Extend the arms of the test dummy as far as possible in the upward vertical direction. Extend the legs of the dummy as far as possible in the forward horizontal direction, with the dummy feet perpendicular to the center line of the lower legs.

(b) Place the Q3s dummy in the child restraint system so that the back of the dummy torso contacts the back support surface of the system. Place the test dummy in the child restraint system with the midsagittal plane of the test dummy head coincident with the center of the child restraint system. Rotate each of the dummy's legs downwards in the plane parallel to the dummy's midsagittal plane until the leg or feet of the dummy contacts the seat back of the SISA or a surface of the child restraint system.

(c) For a child restraint system with a fixed or movable surface, position each movable surface in accordance with the instructions that the manufacturer provided under S5.6.1 or S5.6.2 of Standard No. 213 (§ 571.213). Attach all appropriate child restraint belts used to restrain a child within the child restraint system and tighten them as specified in S6.1.2(d). Attach all appropriate belts or lower anchorage attachments used to attach the child restraint system to the SISA and tighten them as specified in S6.1.2.

(d) After the steps specified in paragraph (c) of this section, rotate each dummy arm downwards in the plane parallel to the dummy's midsagittal plane until the limb is positioned at a 25-degree angle with respect to the thorax.

BILLING CODE 4910–59–P

Figure 1 to § 571.213a. Side Impact Seat Assembly

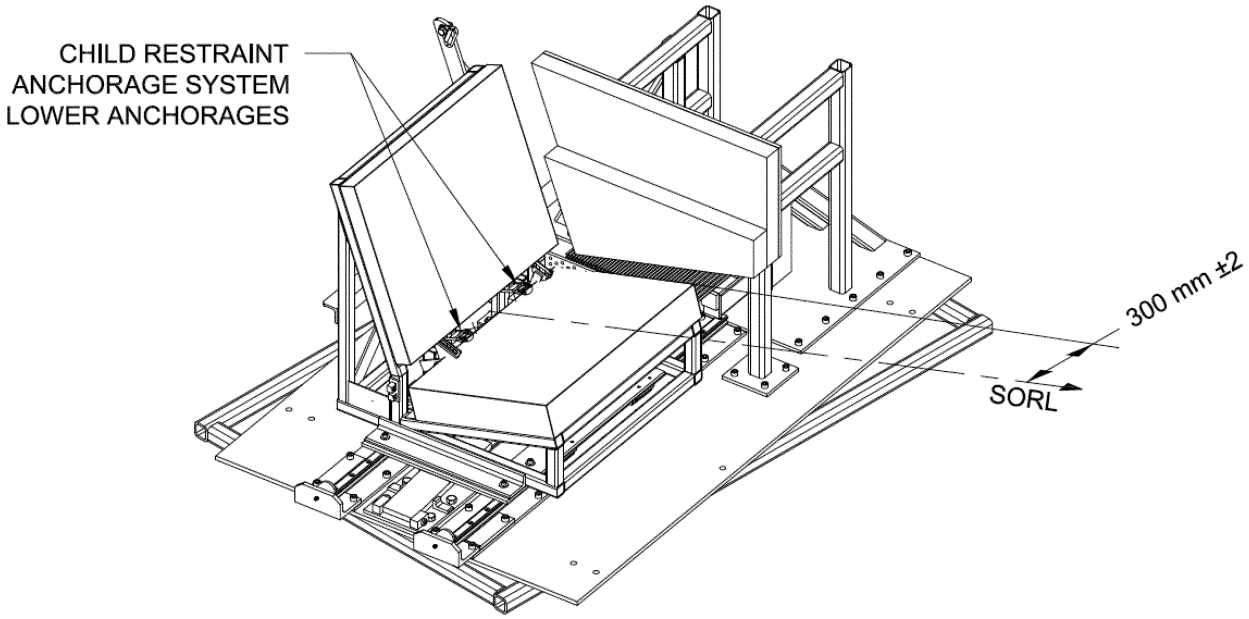

Figure 2A to § 571.213a. Side Impact Seat Assembly Plan View

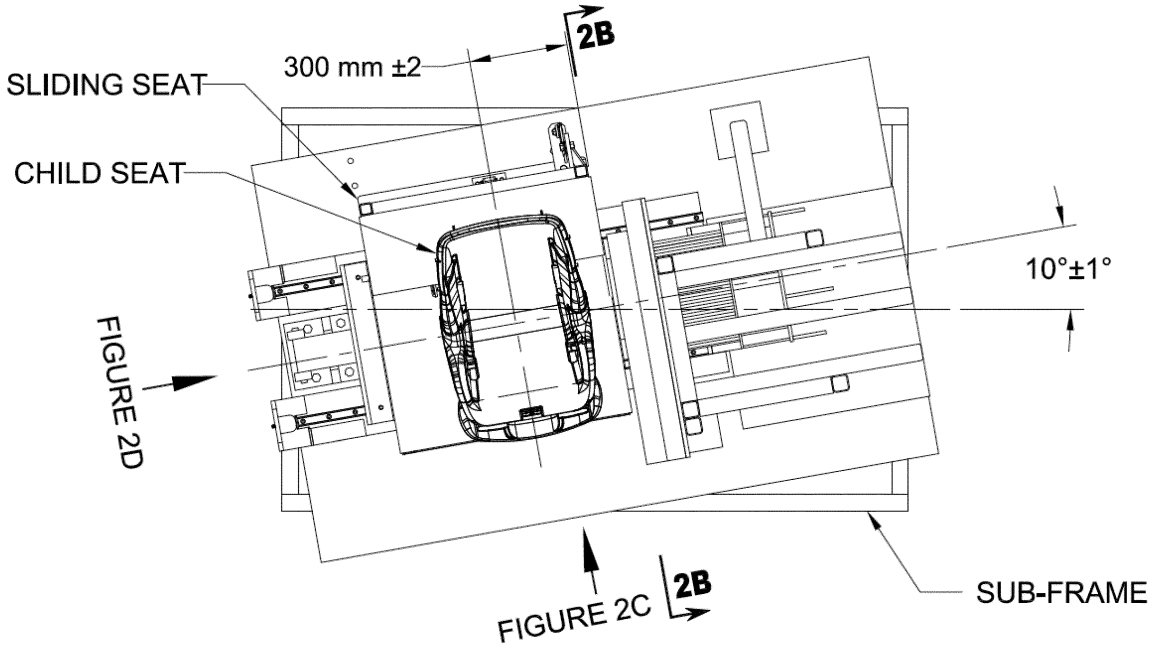

Figure 2B to § 571.213a. Side Impact Seat Assembly Door Panel View

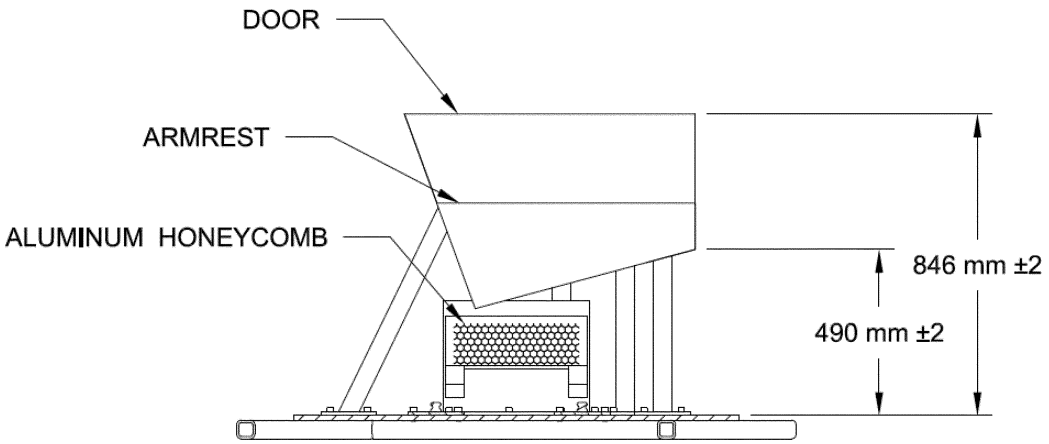

Figure 2C to § 571.213a. Side Impact Seat Assembly Frontal View

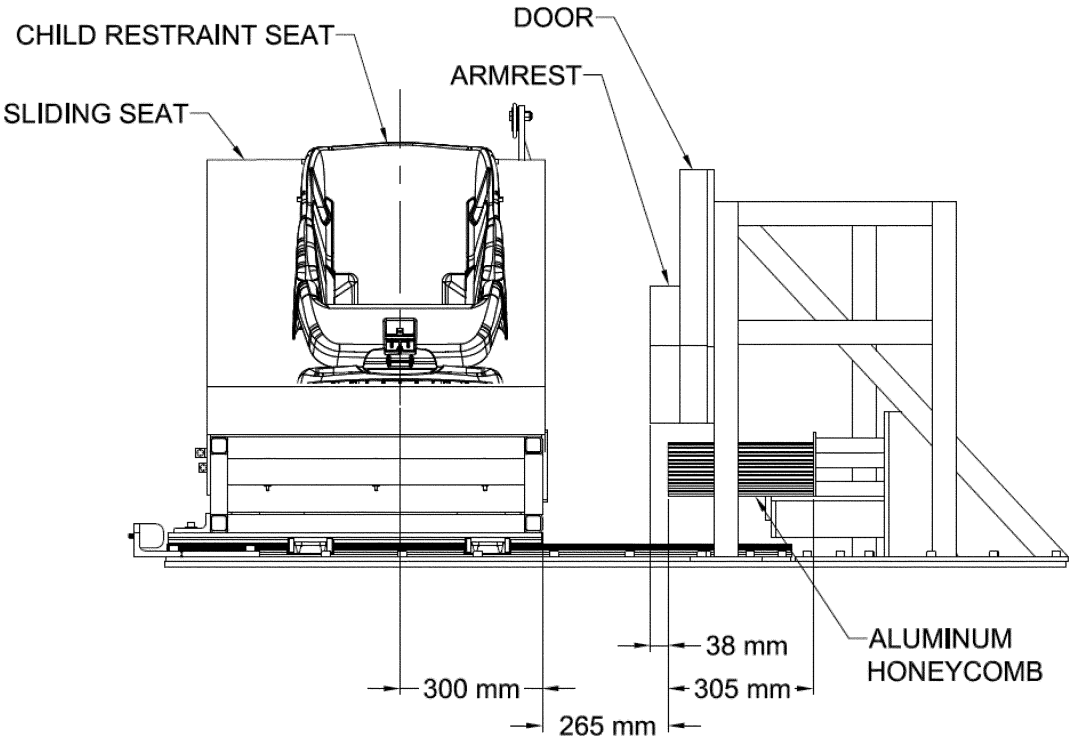

Figure 2D to § 571.213a. Side Impact Seat Assembly Side View

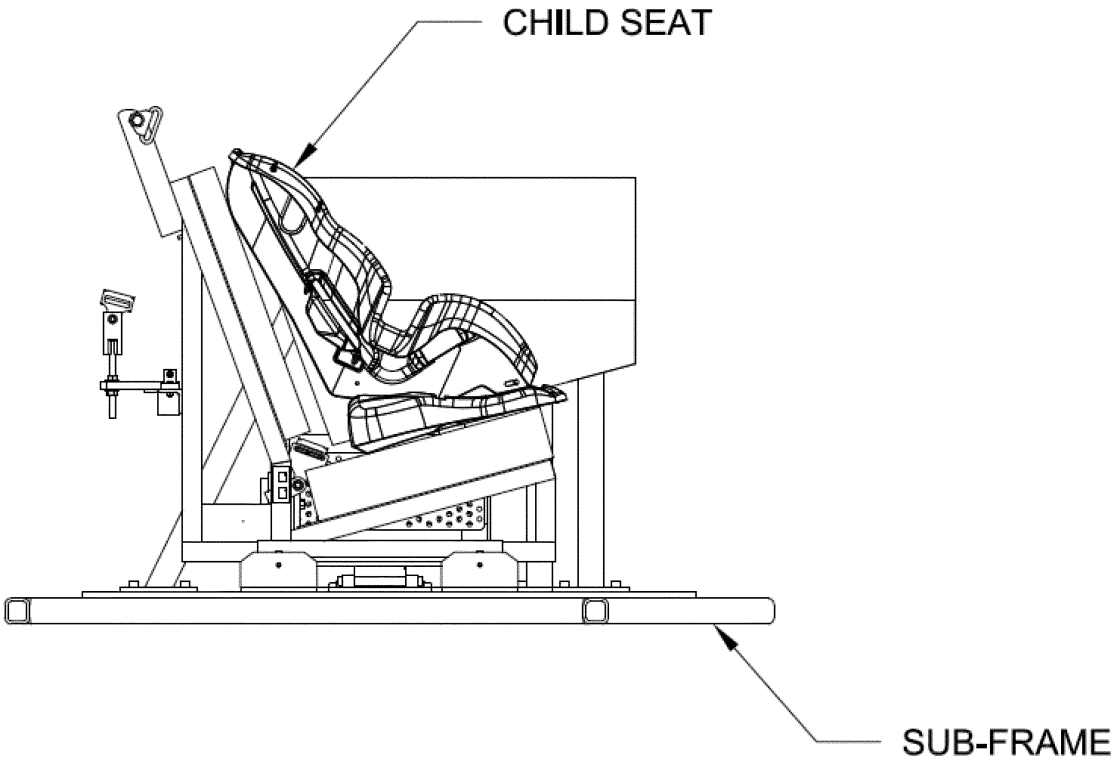

Figure 3 to § 571.213a. SISA Sliding Seat Acceleration Boundaries

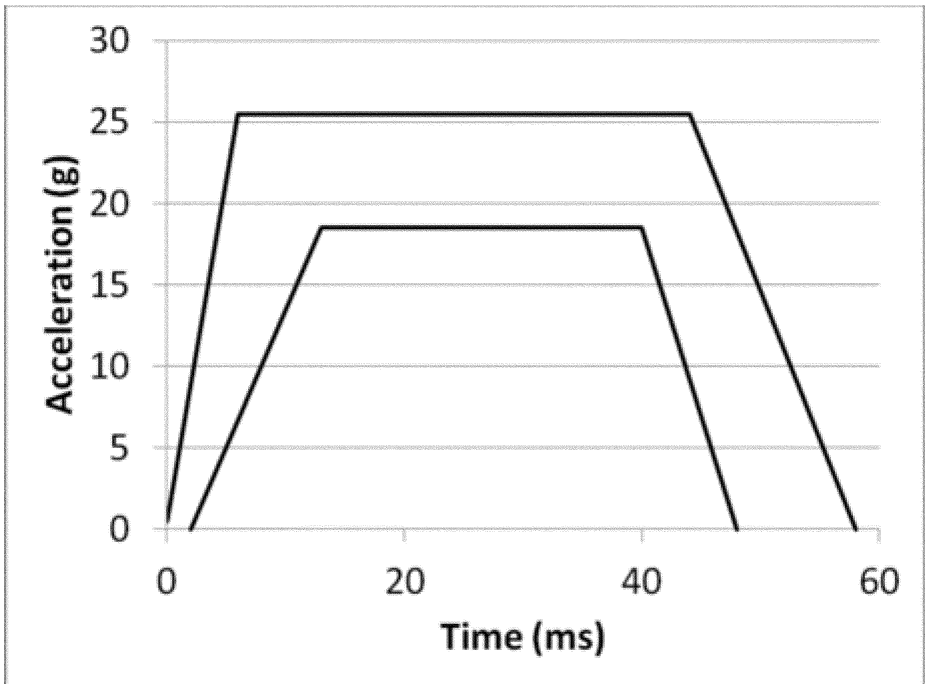

Upper Boundary		Lower Boundary	
Time (milliseconds)	Acceleration (g)	Time (milliseconds)	Acceleration (g)
0	0.5	2	0
6	25.5	13	18.5
44	25.5	40	18.5
58	0	48	0

Figure 4 to § 571.213a. Relative Velocity Corridor Plot and Table

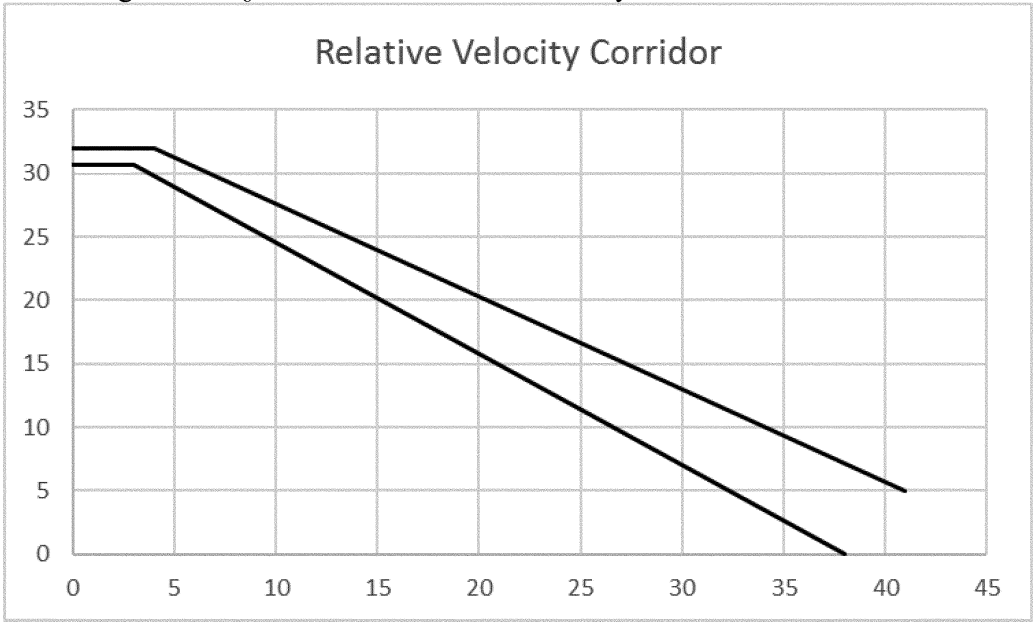

Lower Boundary		Upper Boundary	
Time (milliseconds)	Velocity (kph)	Time (milliseconds)	Velocity (kph)
0	30.66	0	31.94
3	30.66	4	31.94
38	0	41	5

Issued under authority delegated in 49 CFR 1.95 and 501.5.

Steven S. Cliff,

Administrator.

[FR Doc. 2022–13658 Filed 6–29–22; 8:45 am]

BILLING CODE 4910–59–C

FEDERAL REGISTER

Vol. 87 Thursday,

No. 125 June 30, 2022

Part IV

The President

Memorandum of June 23, 2022—Delegation of Authority Under Section 506(a)(1) of the Foreign Assistance Act of 1961

Memorandum of June 26, 2022—Partnership for Global Infrastructure and Investment

Federal Register
Vol. 87, No. 125
Thursday, June 30, 2022

Presidential Documents

Title 3—

The President

Memorandum of June 23, 2022

Delegation of Authority Under Section 506(a)(1) of the Foreign Assistance Act of 1961

Memorandum for the Secretary of State

By the authority vested in me as President by the Constitution and the laws of the United States of America, including section 621 of the Foreign Assistance Act of 1961 (FAA), I hereby delegate to the Secretary of State the authority under section 506(a)(1) of the FAA to direct the drawdown of up to an aggregate value of $450 million in defense articles and services of the Department of Defense, and military education and training, to provide assistance to Ukraine and to make the determinations required under such section to direct such a drawdown.

You are authorized and directed to publish this memorandum in the *Federal Register*.

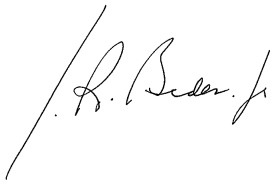

THE WHITE HOUSE,
Washington, June 23, 2022

[FR Doc. 2022–14197
Filed 6–29–22; 11:15 am]
Billing code 4710–10–P

Presidential Documents

Memorandum of June 26, 2022

Partnership for Global Infrastructure and Investment

Memorandum for the Heads of Executive Departments and Agencies

By the authority vested in me as President by the Constitution and the laws of the United States of America, and to establish my Administration's policy and approach to executing the Partnership for Global Infrastructure and Investment (PGII), it is hereby ordered as follows:

Section 1. *Policy.* Infrastructure is critical to driving a society's productivity and prosperity. When done well, infrastructure connects workers to good jobs; allows businesses to grow and thrive; facilitates the delivery of vital services; creates opportunities for all segments of society, including underserved communities; moves goods to markets; enables rapid information-sharing and communication; protects societies from the effects of climate change and public health crises or other emergencies; and supports global connection among nations. Infrastructure comes in many forms and sizes, from the large-scale energy systems that power inclusive economies, to the local healthcare networks that contribute to global health security, to the range of innovative infrastructure developed through investments from financial institutions and small- and medium-sized enterprises. My Administration is making an urgent, once-in-a-generation investment in domestic infrastructure that will create jobs, help address the climate crisis, and help the Nation recover from the coronavirus disease 2019 (COVID–19) pandemic—and the same focus is needed around the globe.

Internationally, infrastructure has long been underfunded, with over $40 trillion in estimated need in the developing world—a need that will only increase with the climate crisis and population growth. Many low- and middle-income countries lack adequate access to high-quality financing that meets their long-term infrastructure investment needs. Too often, financing options lack transparency, fuel corruption and poor governance, and create unsustainable debt burdens, often leading to projects that exploit, rather than empower, workers; exacerbate challenges faced by vulnerable populations, such as forced displacement; degrade natural resources and the environment; threaten economic stability; undermine gender equality and human rights; and put insufficient focus on cybersecurity best practices—a failure that can contribute to vulnerable information and communications technology networks.

The underinvestment in infrastructure is not just financial, but also technical. Delivering high-quality infrastructure in low- and middle-income countries must include helping to establish and improve the necessary institutional and policy frameworks, regulatory environment, and human capacity to ensure the sustainable delivery of services to communities; defining strong engineering, environmental, social, governance, and labor standards; and structuring projects to attract private investment. Through the PGII, the United States and like-minded partners will emphasize high-standards and quality investments in resilient infrastructure that will drive job creation, safeguard against corruption, guarantee respect for workers' organizations and collective bargaining as allowed by national law or similar mechanisms, support inclusive economic recovery, address risks of environmental degradation, promote robust cybersecurity, promote skills transfer, and protect American economic prosperity and national security. The PGII will also advance values-driven infrastructure development that is carried out in a transparent

and sustainable manner—financially, environmentally, and socially—to lead to better outcomes for recipient countries and communities.

There is bipartisan support for international infrastructure development. The Congress passed the Better Utilization of Investments Leading to Development Act of 2018 (BUILD Act) (Division F of Public Law 115–254, 132 Stat. 3485) with bipartisan support to mobilize private-sector dollars to support economic development in low- and middle income countries, which can include support for projects to build infrastructure, creating first-time access to electricity, starting businesses, and creating jobs. The BUILD Act institutionalized the United States' commitment to private sector–funded development by establishing the United States International Development Finance Corporation (DFC), authorized a higher exposure cap for the DFC than the exposure cap for the former Overseas Private Investment Corporation, and provided new tools to engage entrepreneurs and investors to help low- and middle-income countries access private resources to generate economic growth. These investments help ensure that our partners are stronger, create opportunities for people around the world, and reduce the need for future United States foreign aid.

In a similar spirit, in 2018 the Congress passed the AGOA and MCA Modernization Act (Public Law 115–167, 132 Stat. 1276), authorizing the Millennium Challenge Corporation (MCC) to make concurrent regional compacts under specified conditions, which can include investments in regional infrastructure. This new authority builds on the MCC's record of delivering complex infrastructure projects that result in the delivery of vital services for communities and sustainable, inclusive economic growth. In addition, recognizing the need for access to high-quality, fair, and transparent financing for United States exporters and foreign buyers, the Congress also reauthorized the Export-Import Bank of the United States (EXIM) for 7 years in 2019. The EXIM's reauthorization legislation also took steps to advance American leadership in transformational exports, which can include support for goods and services necessary for open, secure, reliable, and interoperable information and communications technology.

The United States and its partners have a long history of providing high-quality financing and technical support for infrastructure projects throughout the world. However, the lack of a comprehensive approach for coordinating infrastructure investments with like-minded partners often leads to inefficiencies and missed opportunities for coordinated investments to deliver at scale. Greater flexibility, speed, and resources, combined with expanded internal coordination within the United States Government, will provide opportunities for the United States Government and United States companies to better meet the infrastructure needs of low- and middle-income countries around the world. At the same time, greater coordination with G7 and other like-minded partners will increase efficiency and catalyze new financing to advance a shared vision of values driven, high-quality, and sustainable infrastructure around the world.

Four key priorities relating to infrastructure will be especially critical for robust development in the coming decades: climate and energy security, digital connectivity, health and health security, and gender equality and equity. Economic prosperity and competitiveness will largely be driven by how well countries harness their digital and technology sectors and transition to clean energy to provide environmentally sustainable and broadly shared, inclusive growth for their people. Countries not only will need new and retrofitted infrastructure, secure clean energy supply chains, and secure access to critical minerals and metals to facilitate energy access and transitions to clean energy, but also will need significant investments in infrastructure to make communities more resilient to diverse threats, from pandemics to malicious cyber actors, to the increasing effects of climate change. Further, the COVID–19 pandemic has highlighted the unequal infrastructure needs in the developing world and has disproportionately affected low- and middle-income countries and regions, particularly with respect to the health sector.

In the developing world, the pandemic has also set back the economic participation of women and members of underserved communities and has reversed decades of progress toward ending poverty, with global extreme poverty rising for the first time in more than 20 years due to COVID–19. The pandemic has highlighted the need for expanded investments in and high-quality financing for strengthened health systems to both fight the current pandemic and prepare for future health crises.

It is therefore the policy of the United States to catalyze international infrastructure financing and development through the PGII, which is designed to offer low- and middle-income countries a comprehensive, transparent, values-driven financing choice for infrastructure development to advance climate and energy security, digital connectivity, health and health security, and gender equality and equity priorities. The PGII will mobilize public and private resources to meet key infrastructure needs, while enhancing American competitiveness in international infrastructure development and creating good jobs at home and abroad. In this effort, the United States is working in close partnership with G7 and other like-minded partners toward infrastructure financing and infrastructure development that are sustainable, clean, resilient, inclusive, and transparent, and that adhere to high standards.

Sec. 2. *Approach.* In order to meet the enormous infrastructure needs in the developing world, a new approach to international infrastructure development that emphasizes high-standards investment is needed. To meet this challenge and seize this opportunity, the PGII should:

(a) partner with low- and middle-income countries to finance infrastructure across key sectors that advances the four key priorities critical to sustainable, inclusive growth: climate and energy security, digital connectivity, health and health security, and gender equality and equity;

(b) promote the execution of projects in a timely fashion in consultation and partnership with host countries and local stakeholders to meet their priority needs and opportunities, balancing both short- and longer-term priorities;

(c) pursue the dual goals of advancing prosperity and surmounting global challenges, including the climate crisis, through the development of clean, climate-resilient infrastructure that drives job creation, accelerates clean energy innovation, and supports inclusive economic recovery;

(d) support the policy and institutional reforms that are key to creating the conditions and capacity for sound projects and lasting results and to attracting private financing;

(e) boost the competitiveness of the United States by supporting businesses, including small- and medium-sized enterprises in overseas infrastructure and technology development, thereby creating jobs and economic growth here at home;

(f) advance transparency, accountability, and performance metrics to allow assessment of whether investments and projects deliver results and are responsive to country needs, are financially sound, and meet a high standard;

(g) mobilize private capital from both the United States private sector and the private sector in partner countries;

(h) build upon relationships with international financial institutions, including the multilateral development banks (MDBs), to mobilize capital;

(i) focus on projects that can attract complementary private-sector financing and catalyze additional market activity to multiply the positive impact on economies and communities;

(j) coordinate sources of bilateral and multilateral development finance to maximize the ability to meet infrastructure needs and facilitate the implementation of high standards for infrastructure investment;

(k) uphold high standards for infrastructure investments and procurement, which safeguard against bribery and other forms of corruption, better address climate risks and risks of environmental degradation, promote skills transfer, generate good jobs, mitigate risks to vulnerable populations, and promote long-term economic and social benefits for economies and communities; and

(l) align G7 and other like-minded partners to coordinate our respective approaches, investment criteria, expertise, and resources on infrastructure to advance a common vision and better meet the needs of low- and middle-income countries and regions.

Sec. 3. *Execution.* (a) A whole-of-government approach is necessary to meet the challenge of international infrastructure development, with executive departments and agencies (agencies) working together with like minded partners. The Special Presidential Coordinator for the Partnership for Global Infrastructure and Investment shall be responsible for overseeing the whole-of-government execution of these efforts and serving as the central node for United States coordination among the G7, as well as with other like-minded partners, the private sector, and other external actors. While specific lines of effort and initiatives may each have agency leads, such as on sourcing critical minerals or identifying trusted 5G and 6G vendors, whole-of-government policies should be addressed through the Coordinator.

(b) Agencies shall, consistent with applicable law and available appropriations, prioritize support for the PGII and make strategic investments across the PGII's key priorities of climate and energy security, digital connectivity, health and health security, and gender equality and equity.

(c) The PGII shall be executed through the following key implementation efforts:

(i) The Assistant to the President for National Security Affairs (APNSA), through the interagency process identified in National Security Memorandum 2 of February 4, 2021 (Renewing the National Security Council System) (NSM–2), shall submit a report to the President within 180 days of the date of this memorandum. The report shall include recommendations on United States Government actions to boost the competitiveness of the United States in international infrastructure development, and to improve coordination on international infrastructure development across relevant agencies.

(ii) The Secretary of State, the Secretary of the Treasury, the Secretary of the Interior, the Secretary of Commerce, the Secretary of Labor, the Secretary of Health and Human Services, the Secretary of Transportation, the Secretary of Energy, the Administrator of the United States Agency for International Development (USAID), and the heads of other relevant agencies shall prioritize programming consistent with the policy and approach described in sections 1 and 2 of this memorandum to support timely delivery of international infrastructure development, particularly across the PGII's four key priorities, as appropriate and consistent with their respective authorities. The Chief Executive Officer (CEO) of MCC, the CEO of DFC, the President of EXIM, the Director of the Trade and Development Agency (TDA), and the heads of other relevant independent agencies are encouraged to follow this same line of effort, as appropriate and consistent with their respective authorities.

(iii) The Secretary of State shall direct Chiefs of Mission to use all appropriate tools and to develop coordination mechanisms—including through Embassy Deal Teams—to address host country strategic infrastructure needs within the PGII's four key priority areas.

(iv) The Secretary of State and the Secretary of Commerce, in consultation with the Secretary of Health and Human Services, the Secretary of Energy, the Administrator of USAID, the CEO of MCC, the CEO of DFC, the President of EXIM, and the Special Presidential Coordinator, shall develop a strategy for using Embassy Deal Teams to identify potential priority infrastructure projects for the PGII and refer promising opportunities to

relevant agencies for consideration, based on each agency's strengths and authorities.

(v) The Secretary of State, through the Special Presidential Coordinator and in consultation with the heads of other relevant agencies, shall coordinate diplomatic engagements to expand the PGII beyond the G7 to bring greater resources and opportunities for partnership.

(vi) The Secretary of State, through the Special Presidential Coordinator and in consultation with the Secretary of the Treasury, the Secretary of Commerce, the Secretary of Labor, the Secretary of Health and Human Services, the Secretary of Transportation, the Administrator of the Environmental Protection Agency, the Administrator of USAID, the CEO of MCC, and the CEO of DFC, shall lead interagency efforts regarding international coordination on infrastructure development standards and metrics, including on labor and environment, and certification mechanisms, including through the Blue Dot Network.

(vii) The Secretary of Commerce, in consultation with the Administrator of the Small Business Administration, the President of EXIM, the Director of TDA, and the Special Presidential Coordinator, shall develop and implement a strategy to boost the competitiveness of the United States and promote the use of United States equipment and services in international infrastructure development.

(viii) The Secretary of the Treasury, in consultation with the Secretary of State, the CEO of MCC, the CEO of DFC, and the Special Presidential Coordinator, shall develop and implement a strategy to catalyze private-sector investment and support low- and middle-income countries across the PGII's four key priority areas.

(ix) The Secretary of the Treasury, in consultation with the Secretary of State, the Secretary of Commerce, the Secretary of Health and Human Services, the Administrator of USAID, and the Special Presidential Coordinator shall develop a plan for engaging the MDBs to foster high-quality infrastructure investment and increased private-capital mobilization for low- and middle-income countries, and shall coordinate with like-minded partners in the plan's execution. The CEO of DFC, in consultation with the Secretary of State, the Secretary of the Treasury, the Administrator of USAID, and the Special Presidential Coordinator, is encouraged to develop a plan to enhance engagement with national and international development finance institutions to increase private-capital mobilization.

(x) The Secretary of Transportation, in consultation with the heads of other relevant agencies, shall develop and implement a strategy to promote high-quality, sustainable, and resilient transportation infrastructure in low- and middle-income countries, including through the launch of a comprehensive toolkit for national, subnational, and multilateral partners that emphasizes best practices in planning, finance, project delivery, safety, and maintenance.

(xi) The APNSA, through the interagency process identified in NSM–2 and in coordination with the Director of the Office of Management and Budget, shall identify potential legislative and administrative actions that could improve the ability of United States economic development and assistance, development finance, and export credit tools to meet international infrastructure development needs.

(xii) The APNSA, through the interagency process identified in NSM–2, shall lead biannual reviews to monitor the progress, metrics, and outcomes of the PGII's investments and projects; identify strategic opportunities across the PGII's four key priorities; and ensure that the execution of the PGII aligns with, and supports, broader strategic United States national security and economic objectives and values, including by supporting United States companies in international infrastructure development.

Sec. 4. *Definition.* For purposes of this memorandum, ''agency'' means any authority of the United States that is an ''agency'' under 44 U.S.C. 3502(1), other than one considered to be an independent regulatory agency, as defined in 44 U.S.C. 3502(5). ''Agency'' also means any component of the Executive Office of the President.

Sec. 5. *General Provisions.* (a) Nothing in this memorandum shall be construed to impair or otherwise affect:

(i) the authority granted by law to an executive department or agency, or the head thereof; or

(ii) the functions of the Director of the Office of Management and Budget relating to budgetary, administrative, or legislative proposals.

(b) This memorandum shall be implemented consistent with applicable law and subject to the availability of appropriations.

(c) This memorandum is not intended to, and does not, create any right or benefit, substantive or procedural, enforceable at law or in equity by any party against the United States, its departments, agencies, or entities, its officers, employees, or agents, or any other person.

(d) The Secretary of State is authorized and directed to publish this memorandum in the *Federal Register*.

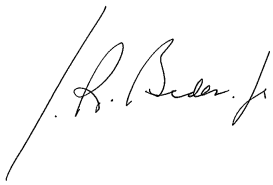

THE WHITE HOUSE,
Washington, June 26, 2022

[FR Doc. 2022–14198
Filed 6–29–22; 11:15 am]
Billing code 4710–10–P

Reader Aids

Federal Register

Vol. 87, No. 125

Thursday, June 30, 2022

CUSTOMER SERVICE AND INFORMATION

Federal Register/Code of Federal Regulations

General Information, indexes and other finding aids	**202–741–6000**
Laws	**741–6000**

Presidential Documents

Executive orders and proclamations	**741–6000**
The United States Government Manual	**741–6000**

Other Services

Electronic and on-line services (voice)	**741–6020**
Privacy Act Compilation	**741–6050**

ELECTRONIC RESEARCH

World Wide Web

Full text of the daily Federal Register, CFR and other publications is located at: **www.govinfo.gov.**

Federal Register information and research tools, including Public Inspection List and electronic text are located at: **www.federalregister.gov.**

E-mail

FEDREGTOC (Daily Federal Register Table of Contents Electronic Mailing List) is an open e-mail service that provides subscribers with a digital form of the Federal Register Table of Contents. The digital form of the Federal Register Table of Contents includes HTML and PDF links to the full text of each document.

To join or leave, go to **https://public.govdelivery.com/accounts/USGPOOFR/subscriber/new**, enter your email address, then follow the instructions to join, leave, or manage your subscription.

PENS (Public Law Electronic Notification Service) is an e-mail service that notifies subscribers of recently enacted laws.

To subscribe, go to **http://listserv.gsa.gov/archives/publaws-l.html and select** *Join or leave the list (or change settings);* then follow the instructions.

FEDREGTOC and **PENS** are mailing lists only. We cannot respond to specific inquiries.

Reference questions. Send questions and comments about the Federal Register system to: **fedreg.info@nara.gov**

The Federal Register staff cannot interpret specific documents or regulations.

FEDERAL REGISTER PAGES AND DATE, JUNE

32965–33406 1
33407–33582 2
33583–34066 3
34067–34572 6
34573–34762 7
34863–35066 8
35067–35382 9
35383–35642 10
35643–35852 13
35853–36044 14
36045–36210 15
36211–36380 16
36381–36762 17
36763–37196 21
37197–37434 22
37435–37684 23
37685–37976 24
37977–38264 27
38265–38632 28
38633–38874 29
38875–39328 30

CFR PARTS AFFECTED DURING JUNE

At the end of each month the Office of the Federal Register publishes separately a List of CFR Sections Affected (LSA), which lists parts and sections affected by documents published since the revision date of each title.

2 CFR

Proposed Rules:
700 36411

3 CFR

Proclamations:
9705 (amended by 10403)...33407, (amended by 10406), 33591
9980 (amended by 10403)...33407, (amended by 10406), 33591
10403 33407
10404 33413
10405 33583
10406 33591
10407 33601
10408 33603
10409 33605
10410 33607
10411 33609
10412 33611
10413 33613
10414 35067
10415 36045
10416 36381
10417 37435
10418 37437
10419 37977
10420 38875

Executive Orders:
14075 37189

Administrative Orders:
Memorandums:
Memorandum of June 1, 2022 35081
Memorandum of June 3, 2022 34763
Memorandum of June 8, 2022 35853
Memorandum of June 15, 2022 37975
Memorandum of June 16, 2022 37431
Memorandum of June 21, 2022 37971
Memorandum of June 23, 2022 39321
Memorandum of June 26, 2022 39323
Notices:
Notice of June 13, 2022 36047
Notice of June 13, 2022 36049
Notice of June 13, 2022 36051
Presidential Determinations:
No. 2022-15 of June 6, 2022 35071
No. 2022-16 of June 6, 2022 35073
No. 2022-17 of June 6, 2022 35075
No. 2022-18 of June 6, 2022 35077
No. 2022-19 of June 6, 2022 35079

5 CFR

Proposed Rules:
875 33653
3601 35460

7 CFR

272 35855
407 38883
457 38883
925 36211
985 38633
1710 38639
1735 38639
1737 38639
1738 38639
1739 38639
1740 38639
1774 38639
1775 38639
1776 38639
1777 38639
1778 38639
1780 38639
1783 38639
1942 38639
1980 38639
3570 38639
4274 38639
4279 38639
4280 38639
4284 38639
4288 38639
4290 38639
5001 38639

Proposed Rules:
51 33064
272 38010
301 35904
905 39003
920 36412
944 36412
981 37240
1150 35465

8 CFR

214 34067
274 34067

9 CFR

Proposed Rules:
201 ..... 34814, 34980

10 CFR

72 35858
170 37197

171 37197
429 33316
430 33316
431 ....33316, 34067, 37685
1707 35862

Proposed Rules:
30 38012
32 38012
72 35923
429 ....34934, 35286, 35678, 37122, 39164
430 ....34934, 35286, 35925, 36249, 37240
431 ....34220, 37122, 37934, 38296, 39008, 39164

11 CFR
109 35863

12 CFR
22 36214
201 38645
204 38646
208 36214
210 34350
328 33415
339 36214
614 36214
760 36214
Ch. X 35866, 35868
1002 35864
1022 37700
1240 ....33423, 33615, 37979
1290 32965
1291 32965

Proposed Rules:
25 33884
228 33884
345 33884
614 36261
620 36261
1026 38679

13 CFR
120 ....37979, 38900
121 ....34094, 35869
123 38900

14 CFR
39 ....32969, 32973, 32975, 32978, 33435, 33621, 33623, 33627, 33630, 33632, 34120, 34125, 34129, 34765, 34767, 34770, 34772, 35885, 35890, 35892, 36053, 36055, 36214, 36216, 36219, 36383, 36387, 36390, 37226, 37228, 37982, 37986, 38647, 38651
71 ....32980, 32981, 32982, 34573, 35083, 35383, 35384, 35385, 35386, 35387, 35643, 35644, 35645, 35895, 35896, 35897, 36392, 37231, 37989, 38265, 38266, 38267, 38269, 38270, 38271, 38273, 38274, 38276, 38653, 38655, 38656, 38910, 38912, 38913, 38915, 38916, 38919
95 39394
97 ....35646, 35650, 37725, 37727

Proposed Rules:
21 36076
38 36076
39 ....33071, 33076, 33451, 33454, 33457, 33658, 34221, 34587, 34591, 35118, 35122, 35125, 35128, 35465, 35684, 35686, 36266, 36269, 36272, 36274, 36276, 36415, 36418, 36773, 36775, 36778, 36781, 36783, 37247, 37249, 37454, 38302, 38682, 38686, 38689, 39015, 39019
71 ....33080, 33082, 33083, 33085, 33660, 34595, 34597, 35133, 35469, 35470, 35689, 35690, 35691, 35692, 36421, 36423, 36424, 37252, 38305, 38306, 38307, 38309, 39022, 39023
121 36076
125 36076

15 CFR
734 34131
740 ....32983, 34131
743 32983
744 ....32987, 34131, 34154, 38920
746 34131
748 32983
766 34131
904 38934
922 37728

Proposed Rules:
801 ....36091, 38311

16 CFR
1225 32988
1234 37729

Proposed Rules:
306 38692
310 ....33662, 33677

17 CFR
1 36407
230 35393
232 ....35393, 38943
239 35393
240 ....35393, 38943
249 ....35393, 38943
270 38943
275 38943
279 38943

Proposed Rules:
Ch. II 37772
200 36654
229 35938
230 ....36594, 36654
232 ....36594, 36654
239 ....36594, 36654
240 35938
249 ....35938, 36654
270 ....36594, 37254
274 ....35938, 36594, 36654
275 37254
279 36654

18 CFR

Proposed Rules:
40 38020

19 CFR
12 34775

20 CFR
404 35651
408 35651
416 35651
655 34067

Proposed Rules:
404 38838

21 CFR
870 ....32988, 34777
876 34164
1141 32990
1308 ....32991, 32996, 34166, 37733

Proposed Rules:
175 36426
176 36426
177 36426
178 36426
201 38313
314 38313
878 39025
1162 36786
1166 36786

22 CFR
42 35414
135 38981

23 CFR

Proposed Rules:
680 37262

24 CFR
880 37990
881 37990
883 37990
884 37990
886 37990
891 37990

Proposed Rules:
5 36426
92 36426
93 36426
200 36426
574 36426
576 36426
578 36426
880 36426
882 36426
884 36426
886 36426
888 36426
902 36426
982 36426
983 36426
985 36426

25 CFR

Proposed Rules:
514 36279
518 36280
522 36280
537 36281
559 36281
571 33091

26 CFR

Proposed Rules:
1 ....34223, 37773
20 38331

27 CFR
9 ....33634, 33638, 33642, 33646

Proposed Rules:
4 35693
25 34819

28 CFR
68 38657

Proposed Rules:
0 36786

29 CFR
1910 32999
1926 ....38657, 38985
4044 36058

Proposed Rules:
1910 38343
1926 38343
1952 39033

31 CFR
515 35088
587 ....32999, 34169

Proposed Rules:
1010 34224

32 CFR
199 ....33001, 34779
310 37998

Proposed Rules:
310 37774

33 CFR
100 ....33015, 34170, 34574, 34779, 36059, 36763, 37735, 37736
110 36766
165 ....33018, 33019, 33020, 33649, 34171, 34173, 34574, 34576, 34781, 34784, 34786, 34788, 35092, 35094, 35654, 35656, 36059, 36221, 36768, 37232. 37234, 37439, 37736, 37738, 37740, 37742, 37744, 38280, 38281, 38282, 38658, 38660, 38661, 38986, 38987, 38989, 38991, 38993, 38995, 38996, 38998
187 34175

Proposed Rules:
117 ....33460, 34598, 34601, 35472, 35939
165 ....33695, 34603, 34605, 34607, 34834, 35697, 36430
386 35473

34 CFR
Ch. II 34790
Ch. III 35415

36 CFR
222 35097

Proposed Rules:
242 34228

37 CFR
220 36060
222 36060
225 36060
226 36060
228 36060
230 36060
231 36060
232 36060
233 36060
360 35898
370 39000

Proposed Rules:
385 33093

38 CFR
1 37744
8 35419

14 37744
17 33021
79 33025

39 CFR

20 36061
111 ....33047, 34197, 35658, 38663

Proposed Rules:

111 ....35701, 36432

40 CFR

9 37999
52 ....33438, 33650, 34577, 34579, 34795, 34797, 35104, 35421, 35423, 36222, 36769, 37235, 37752, 38284, 38665
81 ....34795, 34797, 35104
180 ....34203, 34206, 36063, 36068, 36071
271 ....34579, 36074
721 37999

Proposed Rules:

9 36920
52 ....33095, 33461, 33464, 33697, 33699, 34609, 34612, 35701, 35705, 35709, 36096, 36433, 36436, 37280, 37776, 38044, 38046, 38362, 38693, 39036
60 ....35608, 36796
63 ....34614, 35608
70 36436
80 35711
82 36282
98 36920
121 35318
122 35318
124 35318
174 37387
180 ....36438, 37287
721 37783

42 CFR

410 36409
414 36409
488 ....36409, 38669
493 36409

Proposed Rules:

413 38464
484 37600
512 38464

45 CFR

75 39001
1170 36224

46 CFR

4 35899

47 CFR

1 ....34209, 38286
9 ....37237, 38295
10 34212
11 34213
25 33441
73 ....33441, 34799, 35426, 37754
74 37754
76 33441

Proposed Rules:

1 ....36815, 38588
15 ....33109, 38048
20 38048
27 ....33466, 38048
36 36283
51 36283
54 ....36283, 36439, 37459
73 34624
74 36440
80 38048
90 38048
95 38048

48 CFR

225 37440
252 37440

Proposed Rules:

203 37470
212 37470
213 37473
229 37473
232 37473
252 37473

49 CFR

191 35675
270 35660
271 35660
571 ....34800, 39234
575 34800

Proposed Rules:

40 39039
367 35940
525 35718
531 35718
563 37289

50 CFR

17 ....35431, 36225
92 38669
300 ....34580, 34584, 35901
424 37757
622 ....34811, 36771, 38008
635 ....33049, 33056, 38673, 38676
648 ....35112, 36248, 39002
660 33442
679 34215

Proposed Rules:

17 ....34228, 34625, 37378, 37476
20 35942
32 35136
100 34228
218 33113
622 38366
648 34629

LIST OF PUBLIC LAWS

This is a continuing list of public bills from the current session of Congress which have become Federal laws. This list is also available online at *https://www.archives.gov/federal-register/laws*.

The text of laws is not published in the **Federal Register** but may be ordered in ''slip law'' (individual pamphlet) form from the Superintendent of Documents, U.S. Government Publishing Office, Washington, DC 20402 (phone, 202–512–1808). The text will also be made available at *https://www.govinfo.gov*. Some laws may not yet be available.

S. 2089/P.L. 117–158
Keep Kids Fed Act of 2022 (June 25, 2022; 136 Stat. 1309)

S. 2938/P.L. 117–159
Bipartisan Safer Communities Act (June 25, 2022; 136 Stat. 1313)

Last List June 28, 2022

Public Laws Electronic Notification Service (PENS)

PENS is a free email notification service of newly enacted public laws. To subscribe, go to *https://listserv.gsa.gov/cgi-bin/wa.exe?SUBED1=PUBLAWS-L&A=1*

Note: This service is strictly for email notification of new laws. The text of laws is not available through this service. **PENS** cannot respond to specific inquiries sent to this address.