AUTHENTICATED
U.S. GOVERNMENT
INFORMATION
GPO

FEDERAL REGISTER

Vol. 87 Tuesday

No. 31 February 15, 2022

Pages 8391–8732

OFFICE OF THE FEDERAL REGISTER

The **FEDERAL REGISTER** (ISSN 0097–6326) is published daily, Monday through Friday, except official holidays, by the Office of the Federal Register, National Archives and Records Administration, under the Federal Register Act (44 U.S.C. Ch. 15) and the regulations of the Administrative Committee of the Federal Register (1 CFR Ch. I). The Superintendent of Documents, U.S. Government Publishing Office, is the exclusive distributor of the official edition. Periodicals postage is paid at Washington, DC.

The **FEDERAL REGISTER** provides a uniform system for making available to the public regulations and legal notices issued by Federal agencies. These include Presidential proclamations and Executive Orders, Federal agency documents having general applicability and legal effect, documents required to be published by act of Congress, and other Federal agency documents of public interest.

Documents are on file for public inspection in the Office of the Federal Register the day before they are published, unless the issuing agency requests earlier filing. For a list of documents currently on file for public inspection, see *www.federalregister.gov.*

The seal of the National Archives and Records Administration authenticates the Federal Register as the official serial publication established under the Federal Register Act. Under 44 U.S.C. 1507, the contents of the **Federal Register** shall be judicially noticed.

The **Federal Register** is published in paper and on 24x microfiche. It is also available online at no charge at *www.govinfo.gov*, a service of the U.S. Government Publishing Office.

The online edition of the **Federal Register** is issued under the authority of the Administrative Committee of the Federal Register as the official legal equivalent of the paper and microfiche editions (44 U.S.C. 4101 and 1 CFR 5.10). It is updated by 6:00 a.m. each day the **Federal Register** is published and includes both text and graphics from Volume 1, 1 (March 14, 1936) forward. For more information, contact the GPO Customer Contact Center, U.S. Government Publishing Office. Phone 202-512-1800 or 866-512-1800 (toll free). E-mail, *gpocusthelp.com.*

The annual subscription price for the **Federal Register** paper edition is $860 plus postage, or $929, for a combined **Federal Register, Federal Register** Index and List of CFR Sections Affected (LSA) subscription; the microfiche edition of the **Federal Register** including the **Federal Register** Index and LSA is $330, plus postage. Six month subscriptions are available for one-half the annual rate. The prevailing postal rates will be applied to orders according to the delivery method requested. The price of a single copy of the daily **Federal Register,** including postage, is based on the number of pages: $11 for an issue containing less than 200 pages; $22 for an issue containing 200 to 400 pages; and $33 for an issue containing more than 400 pages. Single issues of the microfiche edition may be purchased for $3 per copy, including postage. Remit check or money order, made payable to the Superintendent of Documents, or charge to your GPO Deposit Account, VISA, MasterCard, American Express, or Discover. Mail to: U.S. Government Publishing Office—New Orders, P.O. Box 979050, St. Louis, MO 63197-9000; or call toll free 1-866-512-1800, DC area 202-512-1800; or go to the U.S. Government Online Bookstore site, see *bookstore.gpo.gov.*

There are no restrictions on the republication of material appearing in the **Federal Register.**

How To Cite This Publication: Use the volume number and the page number. Example: 87 FR 12345.

Postmaster: Send address changes to the Superintendent of Documents, Federal Register, U.S. Government Publishing Office, Washington, DC 20402, along with the entire mailing label from the last issue received.

SUBSCRIPTIONS AND COPIES

PUBLIC

Subscriptions:

Paper or fiche	**202–512–1800**
Assistance with public subscriptions	**202–512–1806**
General online information	**202–512–1530; 1–888–293–6498**

Single copies/back copies:

Paper or fiche	**202–512–1800**
Assistance with public single copies	**1–866–512–1800 (Toll-Free)**

FEDERAL AGENCIES

Subscriptions:

Assistance with Federal agency subscriptions:

Email	*FRSubscriptions@nara.gov*
Phone	**202–741–6000**

The Federal Register Printing Savings Act of 2017 (Pub. L. 115-120) placed restrictions on distribution of official printed copies of the daily **Federal Register** to members of Congress and Federal offices. Under this Act, the Director of the Government Publishing Office may not provide printed copies of the daily **Federal Register** unless a Member or other Federal office requests a specific issue or a subscription to the print edition. For more information on how to subscribe use the following website link: *https://www.gpo.gov/frsubs.*

Printed on recycled paper.

Contents

Federal Register

Vol. 87, No. 31

Tuesday, February 15, 2022

Agricultural Marketing Service
RULES
Irish Potatoes Grown in Washington:
Termination of Marketing Order 946, 8399–8402
NOTICES
Imaging Technology Solutions for the Inspection of Milled Rice, 8559–8560

Agriculture Department
See Agricultural Marketing Service
See Forest Service
RULES
Civil Monetary Penalty Inflation Adjustment, 8395–8399

Civil Rights Commission
NOTICES
Meetings; Sunshine Act, 8561

Coast Guard
RULES
Safety Zones:
CBWTP Outfall Diffuser Improvements, Columbia River, Portland, OR, 8416–8417
Potomac River, Between Charles County, MD, and King George County, VA, 8413–8416
Special Local Regulations:
Marine Events within the Eleventh Coast Guard District—Mark Hahn Memorial 300 Mile Personal Watercraft Endurance Race, 8413
PROPOSED RULES
Security Zones:
Delaware River, Philadelphia, PA, 8472–8474
NOTICES
Certificates of Alternative Compliance for the Thirteenth Coast Guard District, 8595

Commerce Department
See Foreign-Trade Zones Board
See National Oceanic and Atmospheric Administration
NOTICES
Agency Information Collection Activities; Proposals, Submissions, and Approvals:
Medical Exception Request; Withdrawal, 8561–8562

Consumer Product Safety Commission
RULES
Safety Standard for Crib Mattresses, 8640–8684
PROPOSED RULES
Safety Standard for Magnets, 8442–8443
Safety Standard for Operating Cords on Custom Window Coverings; Notice of Opportunity for Oral Presentation of Comments, 8441–8442

Defense Department
NOTICES
Charter Amendments, Establishments, Renewals and Terminations:
Uniform Formulary Beneficiary Advisory Panel, 8563–8564

Education Department
NOTICES
Applications for New Awards:
Equity Assistance Centers, 8564–8570

Energy Department
See Federal Energy Regulatory Commission
NOTICES
Agency Information Collection Activities; Proposals, Submissions, and Approvals, 8575–8576
Request for Information:
Establishment of a Civil Nuclear Credit Program, 8570–8575

Environmental Protection Agency
RULES
Air Quality State Implementation Plans; Approvals and Promulgations:
Arizona State Implementation Plan Revisions; Maricopa County Air Quality Department; Stationary Source Permits; New Source Review, 8418–8427
NOTICES
Inventory of U.S. Greenhouse Gas Emissions and Sinks: 1990–2020, 8583

Federal Aviation Administration
RULES
Airspace Designations and Reporting Points:
Kit Carson County Airport, Burlington, CO, 8408–8410
Vicinity of Worthington, MN, 8410–8411
Airworthiness Directives:
Airbus Helicopters, 8406–8408
CFM International, S.A. Turbofan Engines, 8402–8406
PROPOSED RULES
Airworthiness Directives:
Airbus Helicopters Deutschland GmbH (AHD) Helicopters, 8439–8441
CFM International, S.A. Turbofan Engines, 8434–8436
The Boeing Company Airplanes, 8436–8438
NOTICES
Agency Information Collection Activities; Proposals, Submissions, and Approvals:
Certification: Pilots and Flight Instructors, 8631

Federal Communications Commission
PROPOSED RULES
Television Broadcasting Services:
Billings, MT; Correction, 8509
NOTICES
Agency Information Collection Activities; Proposals, Submissions, and Approvals, 8583–8584

Federal Election Commission
NOTICES
Meetings; Sunshine Act, 8584–8585

Federal Emergency Management Agency
NOTICES
Meetings:
Pandemic Response Voluntary Agreement under the Defense Production Act, 8596–8597

Federal Energy Regulatory Commission
RULES
Safety of Water Power Projects and Project Works:
Correction, 8411
NOTICES
Application:
Alice Falls Hydro, LLC, 8578–8579
Northbrook Carolina Hydro II, LLC, HydroLand Carolinas I, LLC; Withdrawal, 8579–8580
Combined Filings, 8577–8578
Environmental Impact Statements; Availability, etc.:
Venture Global CP2 LNG, LLC, Venture Global CP Express, LLC; CP2 LNG and CP Express Project, 8580–8583
Meetings; Sunshine Act, 8576–8577
Request for Extension of Time:
Texas Eastern Transmission, LP, 8579

Federal Highway Administration
RULES
Diversion of Highway Revenues:
Removal of Obsolete Regulation, 8411–8413
NOTICES
Surface Transportation Project Delivery Program:
Alaska Department of Transportation and Public Facilities Third Audit Report, 8631–8635

Federal Maritime Commission
PROPOSED RULES
Demurrage and Detention Billing Requirements, 8506–8509

Federal Retirement Thrift Investment Board
NOTICES
Meetings, 8585

Fish and Wildlife Service
PROPOSED RULES
Endangered and Threatened Species:
Endangered Species for Prostrate Milkweed and Designation of Critical Habitat, 8509–8543

Food and Drug Administration
NOTICES
Data Standards:
Version 3.1.1 of the Clinical Data Interchange Standards Consortium Standard for Exchange of Nonclinical Data Implementation Guide, 8585–8586
Request for Comments:
International Drug Scheduling; Convention on Psychotropic Substances; Single Convention on Narcotic Drugs; World Health Organization; etc., 8586–8592
Withdrawal of Guidance:
Compliance Policy Guide Sec. 510.800, 540.420, 562.800, 8592–8593

Foreign Assets Control Office
NOTICES
Sanctions Actions, 8635–8636

Foreign-Trade Zones Board
NOTICES
Application for Subzone:
Kaiser Premier, LLC, Foreign-Trade Zone 123, Denver, CO, 8563
Proposed Production Activity:
M.M.O. Companies, Inc. (Disassembly of Firearms and Ammunition), Foreign-Trade Zone 31, Granite City, IL, 8562–8563

Forest Service
NOTICES
Comprehensive River Management Plan for Nine Wild and Scenic Rivers on Mt. Hood National Forest:
Clackamas, Multnomah, Wasco and Hood River Counties, OR, 8561
Meetings:
Superior Resource Advisory Committee, 8560–8561

Health and Human Services Department
See Food and Drug Administration
See Health Resources and Services Administration
NOTICES
Agency Information Collection Activities; Proposals, Submissions, and Approvals, 8594–8595

Health Resources and Services Administration
NOTICES
Agency Information Collection Activities; Proposals, Submissions, and Approvals:
Ryan White HIV/AIDS Program AIDS Education and Training Center Program Evaluation Activities, 8593–8594

Homeland Security Department
See Coast Guard
See Federal Emergency Management Agency
See U.S. Citizenship and Immigration Services
See U.S. Customs and Border Protection
See U.S. Immigration and Customs Enforcement

Housing and Urban Development Department
NOTICES
Agency Information Collection Activities; Proposals, Submissions, and Approvals:
At-Risk/Receivership/Receivership/Substandard/Troubled Program, 8604
Family Options 12 Year Study: Tracking and Reengagement Data Collection, 8603–8604
Inspector Candidate Assessment Questionnaire, 8604–8605

Interior Department
See Fish and Wildlife Service
RULES
Privacy Act:
Exemption for the Insider Threat Program, 8427–8428

International Trade Commission
NOTICES
Investigations; Determinations, Modifications, and Rulings, etc.:
Certain Movable Barrier Operator Systems and Components Thereof, 8605–8606

Justice Department
NOTICES
Agency Information Collection Activities; Proposals, Submissions, and Approvals:
2022 Police Public Contact Survey, 8609
Electronic Applications for the Attorney General's Honors Program and the Summer Law Intern Program, 8606–8607
National Pretrial Reporting Program, 8607–8608
Sequestered Juror Information Form, 8608–8609

Labor Department
See Mine Safety and Health Administration

See Occupational Safety and Health Administration
NOTICES
Agency Information Collection Activities; Proposals, Submissions, and Approvals:
General Working Conditions in Shipyard Employment Standard, 8609–8610

Mine Safety and Health Administration
NOTICES
Petition:
Modification of Application of an Existing Mandatory Safety Standard, 8610–8611

National Aeronautics and Space Administration
NOTICES
Meetings:
Heliophysics Advisory Committee; Space Weather Council, 8615–8616

National Credit Union Administration
NOTICES
Meetings; Sunshine Act, 8616

National Endowment for the Humanities
RULES
Indemnification of Employees, 8430–8432
Testimony and Production of Records, 8428–8430
NOTICES
Privacy Act; Systems of Records; Correction, 8616

National Foundation on the Arts and the Humanities
See National Endowment for the Humanities

National Oceanic and Atmospheric Administration
RULES
Atlantic Highly Migratory Species:
Atlantic Bluefin Tuna Fisheries, 8432–8433
Fisheries of the Exclusive Economic Zone off Alaska:
Pacific Cod by Vessels Using Pot Gear in the Western Regulatory Area of the Gulf of Alaska, 8433
PROPOSED RULES
Fisheries of the Northeastern United States:
Framework Adjustment 34 to the Atlantic Sea Scallop Fishery Management Plan, 8543–8558

National Science Foundation
NOTICES
Agency Information Collection Activities; Proposals, Submissions, and Approvals:
Education and Human Resources Program Monitoring Clearance, 8616–8618

Occupational Safety and Health Administration
NOTICES
Agency Information Collection Activities; Proposals, Submissions, and Approvals:
Acrylonitrile Standard, 8611–8612
National Fall Safety Stand-Down to Prevent Falls in Construction, 8614–8615
Nationally Recognized Testing Laboratories:
MET Laboratories, Inc.; Application for Expansion of Recognition, 8612–8614

Personnel Management Office
NOTICES
Agency Information Collection Activities; Proposals, Submissions, and Approvals:
Program Services Evaluation Surveys, 8618

Presidential Documents
EXECUTIVE ORDERS
Afghanistan; Property of Da Afghanistan Bank, Protection Efforts on Behalf of the People (EO 14064), 8391–8393

Railroad Retirement Board
NOTICES
Agency Information Collection Activities; Proposals, Submissions, and Approvals, 8618–8620

Securities and Exchange Commission
PROPOSED RULES
Rule 10b5–1 and Insider Trading, 8686–8731
Share Repurchase Disclosure Modernization, 8443–8472
NOTICES
Advisors Series Trust and Semper Capital Management, LP, 8623–8624
DoubleLine ETF Trust, et al., 8620–8621
Self-Regulatory Organizations; Proposed Rule Changes:
Cboe BZX Exchange, Inc., 8628
Cboe Exchange, Inc., 8621–8623, 8625–8628
National Securities Clearing Corp., 8624

Small Business Administration
NOTICES
Disaster Declaration:
Colorado, 8629–8630
Small Business Size Standards:
Termination of Nonmanufacturer Rule Class Waiver, 8628–8629
Termination of Nonmanufacturer Rule Class Waiver, 8630–8631

Transportation Department
See Federal Aviation Administration
See Federal Highway Administration

Treasury Department
See Foreign Assets Control Office

U.S. Citizenship and Immigration Services
NOTICES
Agency Information Collection Activities; Proposals, Submissions, and Approvals:
Application for Civil Surgeon Designation, 8598–8599
Application to Preserve Residence for Naturalization, 8602–8603
Petition for Nonimmigrant Worker: H–2A Classification and Petition for Nonimmigrant Worker: H–2B Classification, 8601–8602
Petitions for Nonimmigrant Worker Classifications, 8599–8601

U.S. Customs and Border Protection
NOTICES
Agency Information Collection Activities; Proposals, Submissions, and Approvals:
Insular Possession Certificate of Origin, 8595–8596

U.S. Immigration and Customs Enforcement
NOTICES
Agency Information Collection Activities; Proposals, Submissions, and Approvals:
Designation of Attorney in Fact/Revocation of Designation of Attorney in Fact, 8597–8598

Veterans Affairs Department

PROPOSED RULES

Schedule for Rating Disabilities:
Mental Disorders, 8498–8506
Schedule for Rating Disabilities: Ear, Nose, Throat, and Audiology Disabilities; Respiratory System; Special Provisions Regarding Evaluation of Respiratory Conditions, 8474–8498

NOTICES

Agency Information Collection Activities; Proposals, Submissions, and Approvals:
Application for Veterans Affairs Life Insurance, 8637
Meetings:
Advisory Committee on Homeless Veterans, 8636–8637
Geriatric and Gerontology Advisory Committee, 8637–8638
Veterans' Family, Caregiver and Survivor Advisory Committee, 8636

Separate Parts In This Issue

Part II

Consumer Product Safety Commission, 8640–8684

Part III

Securities and Exchange Commission, 8686–8731

Reader Aids

Consult the Reader Aids section at the end of this issue for phone numbers, online resources, finding aids, and notice of recently enacted public laws.

To subscribe to the Federal Register Table of Contents electronic mailing list, go to https://public.govdelivery.com/accounts/USGPOOFR/subscriber/new, enter your e-mail address, then follow the instructions to join, leave, or manage your subscription.

CFR PARTS AFFECTED IN THIS ISSUE

A cumulative list of the parts affected this month can be found in the Reader Aids section at the end of this issue.

3 CFR

Executive Orders:

14064 8391

7 CFR

3 8395
946 8399

14 CFR

39 (2 documents) 8402, 8406
71 (2 documents) 8408, 8410

Proposed Rules:

39 (3 documents) ... 8434, 8436, 8439

16 CFR

1112 8640
1130 8640
1241 8640

Proposed Rules:

1112 (2 documents) 8441, 8442
1260 8441
1262 8442

17 CFR

Proposed Rules:

229 (2 documents) 8443, 8686
232 (2 documents) 8443, 8686
240 (2 documents) 8443, 8686
249 (2 documents) 8443, 8686
274 8443

18 CFR

12 8411

23 CFR

1 8411

33 CFR

100 8413
165 (2 documents) 8413, 8416

Proposed Rules:

165 8472

38 CFR

Proposed Rules:

3 8474
4 (2 documents) 8474, 8498

40 CFR

52 8418

43 CFR

2 8427

45 CFR

1167 8428
1173 8430

46 CFR

Proposed Rules:

Ch. 4 8506
Subch. B 8506

47 CFR

Proposed Rules:

73 8509

50 CFR

635 8432
679 8433

Proposed Rules:

17 8509
648 8543

Federal Register
Vol. 87, No. 31
Tuesday, February 15, 2022

Presidential Documents

Title 3—

The President

Executive Order 14064 of February 11, 2022

Protecting Certain Property of Da Afghanistan Bank for the Benefit of the People of Afghanistan

By the authority vested in me as President by the Constitution and the laws of the United States of America, including the International Emergency Economic Powers Act (50 U.S.C. 1701 *et seq.*) (IEEPA), the National Emergencies Act (50 U.S.C. 1601 *et seq.*) (NEA), and section 301 of title 3, United States Code,

I, JOSEPH R. BIDEN JR., President of the United States of America, find that the widespread humanitarian crisis in Afghanistan—including the urgent needs of the people of Afghanistan for food security, livelihoods support, water, sanitation, health, hygiene, shelter and settlement assistance, and COVID–19-related assistance, among other basic human needs—and the potential for a deepening economic collapse in Afghanistan constitute an unusual and extraordinary threat to the national security and foreign policy of the United States. I hereby declare a national emergency to deal with that threat. In addition, I find that the preservation of certain property of Da Afghanistan Bank (DAB) held in the United States by United States financial institutions is of the utmost importance to addressing this national emergency and the welfare of the people of Afghanistan. I also understand that various parties, including representatives of victims of terrorism, have asserted legal claims against certain property of DAB or indicated in public court filings an intent to make such claims. This property is blocked under this order.

Accordingly, I hereby order:

Section 1. (a) All property and interests in property of DAB that are held, as of the date of this order, in the United States by any United States financial institution, including the Federal Reserve Bank of New York, are blocked and may not be transferred, paid, exported, withdrawn, or otherwise dealt in, except as set forth in subsections (b) and (c) of this section.

(b) United States financial institutions shall promptly transfer the blocked property described in subsection (a) of this section into a consolidated account held at the Federal Reserve Bank of New York.

(c) The prohibitions in subsection (a) of this section apply except to the extent provided by statutes, or in regulations, orders, directives, or licenses that may be issued pursuant to this order, and notwithstanding any contract entered into or any license or permit granted before the date of this order.

Sec. 2. This order and actions taken pursuant to this order shall apply notwithstanding any previously issued Executive Order to the extent such order blocks, regulates, or otherwise affects the property and interests in property identified in section 1(a) of this order. This order and actions taken pursuant to this order shall supersede any previously issued Executive Order to the extent such order blocks, regulates, or otherwise affects the property and interests in property identified in section 1(a) of this order.

Sec. 3. (a) Any transaction that evades or avoids, has the purpose of evading or avoiding, causes a violation of, or attempts to violate any of the prohibitions set forth in this order is prohibited.

(b) Any conspiracy formed to violate any of the prohibitions set forth in this order is prohibited.

Sec. 4. For the purposes of this order:

(a) the term ''Da Afghanistan Bank'' or ''DAB'' means the Central Bank of Afghanistan;

(b) the term ''entity'' means a partnership, association, trust, joint venture, corporation, group, subgroup, or other organization; and

(c) the term ''person'' means an individual or entity.

Sec. 5. For those persons whose property and interests in property are blocked pursuant to this order who might have a constitutional presence in the United States, I find that because of the ability to transfer funds and other assets instantaneously, prior notice to such persons of measures to be taken pursuant to this order would render those measures ineffectual. I therefore determine that for these measures to be effective in addressing the national emergency declared in this order, there need be no prior notice of the blocking of property and interests in property set forth in section 1(a) of this order.

Sec. 6. The Secretary of the Treasury, in consultation with the Secretary of State and the Attorney General, is authorized to take such actions, including the promulgation of rules and regulations, and to employ all powers granted to the President by IEEPA as may be necessary to carry out the purposes of this order. The Secretary of the Treasury may, consistent with applicable law, redelegate any of these functions within the Department of the Treasury. All executive departments and agencies of the United States shall take all appropriate measures within their authority to implement this order.

Sec. 7. Nothing in this order shall prohibit transactions for the conduct of the official business of the Federal Government by employees, grantees, and contractors thereof.

Sec. 8. The Secretary of the Treasury, in consultation with the Secretary of State, is authorized to submit recurring and final reports to the Congress on the national emergency declared in this order, consistent with section 401(c) of the NEA (50 U.S.C. 1641(c)) and section 204(c) of IEEPA (50 U.S.C. 1703(c)).

Sec. 9. (a) Nothing in this order shall be construed to impair or otherwise affect:

(i) the authority granted by law to an executive department or agency, or the head thereof; or

(ii) the functions of the Director of the Office of Management and Budget relating to budgetary, administrative, or legislative proposals.

(b) This order shall be implemented consistent with applicable law and subject to the availability of appropriations.

(c) This order is not intended to, and does not, create any right or benefit, substantive or procedural, enforceable at law or in equity by any party against the United States, its departments, agencies, or entities, its officers, employees, or agents, or any other person.

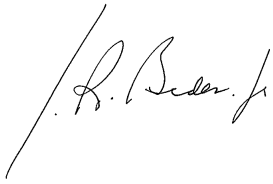

THE WHITE HOUSE,
February 11, 2022.

[FR Doc. 2022–03346
Filed 2–14–22; 8:45 am]
Billing code 3395–F2–P

Rules and Regulations

Federal Register
Vol. 87, No. 31
Tuesday, February 15, 2022

This section of the FEDERAL REGISTER contains regulatory documents having general applicability and legal effect, most of which are keyed to and codified in the Code of Federal Regulations, which is published under 50 titles pursuant to 44 U.S.C. 1510.

The Code of Federal Regulations is sold by the Superintendent of Documents.

DEPARTMENT OF AGRICULTURE

Office of the Secretary

7 CFR Part 3

[Docket No. USDA–2022–0003]

RIN 0503–AA76

Civil Monetary Penalty Inflation Adjustments for 2022

AGENCY: Office of the Secretary, USDA.

ACTION: Final rule.

SUMMARY: This final rule amends the U.S. Department of Agriculture's civil monetary penalty regulations by making inflation adjustments as mandated by the Federal Civil Penalties Inflation Adjustment Act Improvements Act of 2015.

DATES: Effective February 15, 2022.

FOR FURTHER INFORMATION CONTACT: Mr. Stephen O'Neill, Office of Budget and Program Analysis, USDA, 1400 Independence Avenue SW, Washington, DC 20250–1400, (202) 720–0038.

SUPPLEMENTARY INFORMATION:

I. Background

On November 2, 2015, the Federal Civil Penalties Inflation Adjustment Act Improvements Act of 2015 (the 2015 Act), which further amended the Federal Civil Penalties Inflation Adjustment Act of 1990, was signed into law to improve the effectiveness of civil monetary penalties and to maintain their deterrent effect. The 2015 Act requires agencies to adjust for inflation annually.

This rule amends 7 CFR part 3 to update the amount of civil monetary penalties that may be levied by U.S. Department of Agriculture (USDA) agencies to reflect inflationary adjustments for 2022 in accordance with the 2015 Act. As required by the 2015 Act, the annual adjustment was made for inflation based on the Consumer Price Index for the month of October 2021 and rounded to the nearest dollar after an initial adjustment. The civil monetary penalties are listed according to the applicable administering agency.

II. Notice and Comment Not Required

This rule is required by the Federal Civil Penalties Inflation Adjustment Act Improvements Act of 2015, with no issue of policy discretion. Accordingly, pursuant to the administrative procedure provisions in 5 U.S.C. 553, we find upon good cause that prior notice and other public procedure with respect to this action are not necessary. We also find good cause for making this action effective less than 30 days after publication in the **Federal Register**.

III. Procedural Requirements

Executive Order 12866

The Office of Management and Budget has determined that this regulatory action does not meet the criteria for significant regulatory action pursuant to Executive Order 12866, Regulatory Planning and Review.

This rule contains inflation adjustments in compliance with the Federal Civil Penalties Inflation Adjustment Act Improvements Act of 2015. The great majority of individuals, organizations, and entities participating in the programs affected by this regulation do not engage in prohibited activities and practices that would result in civil monetary penalties being incurred. Accordingly, we believe that any aggregate economic impact of this revised regulation will be minimal, affecting only the limited number of program participants that may engage in prohibited behavior in violation of the statutes.

Regulatory Flexibility Act

The provisions of the Regulatory Flexibility Act relating to an initial and final regulatory flexibility analysis (5 U.S.C. 603, 604) are not applicable to this final rule because USDA was not required to publish notice of proposed rulemaking under 5 U.S.C. 553 or any other law. Accordingly, a regulatory flexibility analysis is not required.

Paperwork Reduction Act

This final rule imposes no new reporting or recordkeeping requirements necessitating clearance by OMB.

List of Subjects in 7 CFR Part 3

Administrative practice and procedure, Claims, Government employees, Income taxes, Loan programs—agriculture, Penalties, Reporting and recordkeeping requirements, Wages.

Accordingly, we are amending 7 CFR part 3, subpart I, as follows:

PART 3—DEBT MANAGEMENT

■ 1. The authority citation for part 3, subpart I, continues to read as follows:

Authority: 28 U.S.C. 2461 note.

■ 2. Section 3.91 is amended by revising paragraphs (a)(2) and (b) to read as follows:

§ 3.91 Adjusted civil monetary penalties.

(a) * * *

(2) *Timing.* Any increase in the dollar amount of a civil monetary penalty listed in paragraph (b) of this section applies only to violations occurring after February 15, 2022.

* * * * *

(b) *Penalties*—(1) *Agricultural Marketing Service.* (i) Civil penalty for improper record keeping codified at 7 U.S.C. 136i–1(d), has: A maximum of $1,036 in the case of the first offense, and a minimum of $2,012 in the case of subsequent offenses, except that the penalty will be less than $2,012 if the Secretary determines that the person made a good faith effort to comply.

(ii) Civil penalty for a violation of the unfair conduct rule under the Perishable Agricultural Commodities Act, in lieu of license revocation or suspension, codified at 7 U.S.C. 499b(5), has a maximum of $5,638.

(iii) Civil penalty for violation of the licensing requirements under the Perishable Agricultural Commodities Act, codified at 7 U.S.C. 499c(a), has a maximum of $1,800 for each such offense and not more than $449 for each day it continues, or a maximum of $449 for each offense if the Secretary determines the violation was not willful.

(iv) Civil penalty in lieu of license suspension under the Perishable Agricultural Commodities Act, codified at 7 U.S.C. 499h(e), has a maximum penalty of $3,599 for each violative transaction or each day the violation continues.

(v) Civil penalty for a violation of the Export Apple Act, codified at 7 U.S.C. 586, has a minimum of $163 and a maximum of $16,444.

(vi) Civil penalty for a violation of the Export Grape and Plum Act, codified at 7 U.S.C. 596, has a minimum of $314 and a maximum of $31,465.

(vii) Civil penalty for a violation of an order issued by the Secretary under the Agricultural Adjustment Act, reenacted with amendments by the Agricultural Marketing Agreement Act of 1937, codified at 7 U.S.C. 608c(14)(B), has a maximum of $3,147. Each day the violation continues is a separate violation.

(viii) Civil penalty for failure to file certain reports under the Agricultural Adjustment Act, reenacted by the Agricultural Marketing Agreement Act of 1937, codified at 7 U.S.C. 610(c), has a maximum of $314.

(ix) Civil penalty for a violation of a seed program under the Federal Seed Act, codified at 7 U.S.C. 1596(b), has a minimum of $107 and a maximum of $2,146.

(x) Civil penalty for failure to collect any assessment or fee for a violation of the Cotton Research and Promotion Act, codified at 7 U.S.C. 2112(b), has a maximum of $3,147.

(xi) Civil penalty for failure to pay, collect, or remit any assessment or fee for a violation of a program under the Potato Research and Promotion Act, codified at 7 U.S.C. 2621(b)(1), has a minimum of $1,411 and a maximum of $13,009.

(xii) Civil penalty for failure to obey a cease and desist order under the Potato Research and Promotion Act, codified at 7 U.S.C. 2621(b)(3), has a maximum of $1,411. Each day the violation continues is a separate violation.

(xiii) Civil penalty for failure to pay, collect, or remit any assessment or fee or for a violation of a program under the Egg Research and Consumer Information Act, codified at 7 U.S.C. 2714(b)(1), has a minimum of $1,631 and a maximum of $16,308.

(xiv) Civil penalty for failure to obey a cease and desist order under the Egg Research and Consumer Information Act, codified at 7 U.S.C. 2714(b)(3), has a maximum of $1,631. Each day the violation continues is a separate violation.

(xv) Civil penalty for failure to remit any assessment or fee or for a violation of a program under the Beef Research and Information Act, codified at 7 U.S.C. 2908(a)(2), has a maximum of $12,722.

(xvi) Civil penalty for failure to remit any assessment or for a violation of a program regarding wheat and wheat foods research, codified at 7 U.S.C. 3410(b), has a maximum of $3,147.

(xvii) Civil penalty for failure to pay, collect, or remit any assessment or fee or for a violation of a program under the Floral Research and Consumer Information Act, codified at 7 U.S.C. 4314(b)(1), has a minimum of $1,481 and a maximum of $14,807.

(xviii) Civil penalty for failure to obey a cease and desist order under the Floral Research and Consumer Information Act, codified at 7 U.S.C. 4314(b)(3), has a maximum of $1,481. Each day the violation continues is a separate violation.

(xix) Civil penalty for violation of an order under the Dairy Promotion Program, codified at 7 U.S.C. 4510(b), has a maximum of $2,737.

(xx) Civil penalty for pay, collect, or remit any assessment or fee or for a violation of the Honey Research, Promotion, and Consumer Information Act, codified at 7 U.S.C. 4610(b)(1), has a minimum of $822 and a maximum of $8,433.

(xxi) Civil penalty for failure to obey a cease and desist order under the Honey Research, Promotion, and Consumer Information Act, codified at 7 U.S.C. 4610(b)(3), has a maximum of $843. Each day the violation continues is a separate violation.

(xxii) Civil penalty for a violation of a program under the Pork Promotion, Research, and Consumer Information Act of 1985, codified at 7 U.S.C. 4815(b)(1)(A)(i), has a maximum of $2,545.

(xxiii) Civil penalty for failure to obey a cease and desist order under the Pork Promotion, Research, and Consumer Information Act of 1985, codified at 7 U.S.C. 4815(b)(3)(A), has a maximum of $1,273. Each day the violation continues is a separate violation.

(xxiv) Civil penalty for failure to pay, collect, or remit any assessment or fee or for a violation of a program under the Watermelon Research and Promotion Act, codified at 7 U.S.C. 4910(b)(1), has a minimum of $1,273 and a maximum of $12,722.

(xxv) Civil penalty for failure to obey a cease and desist order under the Watermelon Research and Promotion Act, codified at 7 U.S.C. 4910(b)(3), has a maximum of $1,273. Each day the violation continues is a separate violation.

(xxvi) Civil penalty for failure to pay, collect, or remit any assessment or fee or for a violation of a program under the Pecan Promotion and Research Act of 1990, codified at 7 U.S.C. 6009(c)(1), has a minimum of $2,072 and a maximum of $20,709.

(xxvii) Civil penalty for failure to obey a cease and desist order under the Pecan Promotion and Research Act of 1990, codified at 7 U.S.C. 6009(e), has a maximum of $2,070.

(xxviii) Civil penalty for failure to pay, collect, or remit any assessment or fee or for a violation of a program under the Mushroom Promotion, Research, and Consumer Information Act of 1990, codified at 7 U.S.C. 6107(c)(1), has a minimum of $1,007 and a maximum of $10,066.

(xxix) Civil penalty for failure to obey a cease and desist order under the Mushroom Promotion, Research, and Consumer Information Act of 1990, codified at 7 U.S.C. 6107(e), has a maximum of $1,007. Each day the violation continues is a separate violation.

(xxx) Civil penalty for failure to pay, collect, or remit any assessment or fee or for a violation of the Lime Research, Promotion, and Consumer Information Act of 1990, codified at 7 U.S.C. 6207(c)(1), has a minimum of $1,007 and a maximum of $10,066.

(xxxi) Civil penalty for failure to obey a cease and desist order under the Lime Research, Promotion, and Consumer Information Act of 1990, codified at 7 U.S.C. 6207(e), has a maximum of $1,007. Each day the violation continues is a separate violation.

(xxxii) Civil penalty for failure to pay, collect, or remit any assessment or fee or for a violation of a program under the Soybean Promotion, Research, and Consumer Information Act, codified a 7 U.S.C. 6307(c)(1)(A), has a maximum of $2,072.

(xxxiii) Civil penalty for failure to obey a cease and desist order under the Soybean Promotion, Research, and Consumer Information Act, codified at 7 U.S.C. 6307(e), has a maximum of $10,310. Each day the violation continues is a separate violation.

(xxxiv) Civil penalty for failure to pay, collect, or remit any assessment or fee or for a violation of a program under the Fluid Milk Promotion Act of 1990, codified at 7 U.S.C. 6411(c)(1)(A), has a minimum of $1,007 and a maximum of $10,066, or in the case of a violation that is willful, codified at 7 U.S.C. 6411(c)(1)(B), has a minimum of $19,781 and a maximum of $201,301.

(xxxv) Civil penalty for failure to obey a cease and desist order under the Fluid Milk Promotion Act of 1990, codified at 7 U.S.C. 6411(e), has a maximum of $10,360. Each day the violation continues is a separate violation.

(xxxvi) Civil penalty for knowingly labeling or selling a product as organic except in accordance with the Organic Foods Production Act of 1990, codified at 7 U.S.C. 6519(c), has a maximum of $20,130.

(xxxvii) Civil penalty for failure to pay, collect, or remit any assessment or fee or for a violation of a program under the Fresh Cut Flowers and Fresh Cut Greens Promotion and Information Act of 1993, codified at 7 U.S.C. 6808(c)(1)(A)(i), has a minimum of $949 and a maximum of $9,491.

(xxxviii) Civil penalty for failure to obey a cease and desist order under the Fresh Cut Flowers and Fresh Cut Greens Promotion and Information Act of 1993, codified at 7 U.S.C. 6808(e)(1), has a maximum of $9,491. Each day the violation continues is a separate violation.

(xxxix) Civil penalty for a violation of a program under the Sheep Promotion, Research, and Information Act of 1994, codified at 7 U.S.C. 7107(c)(1)(A), has a maximum of $1,850.

(xl) Civil penalty for failure to obey a cease and desist order under the Sheep Promotion, Research, and Information Act of 1994, codified at 7 U.S.C. 7107(e), has a maximum of $924. Each day the violation continues is a separate violation.

(xli) Civil penalty for a violation of an order or regulation issued under the Commodity Promotion, Research, and Information Act of 1996, codified at 7 U.S.C. 7419(c)(1), has a minimum of $1,746 and a maximum of $17,472 for each violation.

(xlii) Civil penalty for failure to obey a cease and desist order under the Commodity Promotion, Research, and Information Act of 1996, codified at 7 U.S.C. 7419(e), has a minimum of $1,746 and a maximum of $17,472. Each day the violation continues is a separate violation.

(xliii) Civil penalty for a violation of an order or regulation issued under the Canola and Rapeseed Research, Promotion, and Consumer Information Act, codified at 7 U.S.C. 7448(c)(1)(A)(i), has a maximum of $1,746 for each violation.

(xliv) Civil penalty for failure to obey a cease and desist order under the Canola and Rapeseed Research, Promotion, and Consumer Information Act, codified at 7 U.S.C. 7448(e), has a maximum of $8,736. Each day the violation continues is a separate violation.

(xlv) Civil penalty for violation of an order or regulation issued under the National Kiwifruit Research, Promotion, and Consumer Information Act, codified at 7 U.S.C. 7468(c)(1), has a minimum of $874 and a maximum of $8,736 for each violation.

(xlvi) Civil penalty for failure to obey a cease and desist order under the National Kiwifruit Research, Promotion, and Consumer Information Act, codified at 7 U.S.C. 7468(e), has a maximum of $874. Each day the violation continues is a separate violation.

(xlvii) Civil penalty for a violation of an order or regulation under the Popcorn Promotion, Research, and Consumer Information Act, codified at 7 U.S.C. 7487(a), has a maximum of $1,746 for each violation.

(xlviii) Civil penalty for certain violations under the Egg Products Inspection Act, codified at 21 U.S.C. 1041(c)(1)(A), has a maximum of $10,066 for each violation.

(xlix) Civil penalty for violation of an order or regulation issued under the Hass Avocado Promotion, Research, and Information Act of 2000, codified at 7 U.S.C. 7807(c)(1)(A)(i), has a minimum of $1,588 and a maximum of $15,880 for each violation.

(l) Civil penalty for failure to obey a cease and desist order under the Hass Avocado Promotion, Research, and Information Act of 2000, codified at 7 U.S.C. 7807(e)(1), has a maximum of $15,896 for each offense. Each day the violation continues is a separate violation.

(li) Civil penalty for violation of certain provisions of the Livestock Mandatory Reporting Act of 1999, codified a 7 U.S.C. 1636b(a)(1), has a maximum of $16,444 for each violation.

(lii) Civil penalty for failure to obey a cease and desist order under the Livestock Mandatory Reporting Act of 1999, codified a 7 U.S.C. 1636b(g)(3), has a maximum of $16,444 for each violation. Each day the violation continues is a separate violation.

(liii) Civil penalty for failure to obey an order of the Secretary issued pursuant to the Dairy Product Mandatory Reporting program, codified at 7 U.S.C. 1637b(c)(4)(D)(iii), has a maximum of $15,896 for each offense.

(liv) Civil penalty for a willful violation of the Country of Origin Labeling program by a retailer or person engaged in the business of supplying a covered commodity to a retailer, codified at 7 U.S.C. 1638b(b)(2), has a maximum of $1,277 for each violation.

(lv) Civil penalty for violations of the Dairy Research Program, codified at 7 U.S.C. 4535 and 4510(b), has a maximum of $2,737 for each violation.

(lvi) Civil penalty for a packer or swine contractor violation, codified at 7 U.S.C. 193(b), has a maximum of $31,459.

(lvii) Civil penalty for a livestock market agency or dealer failure to register, codified at 7 U.S.C. 203, has a maximum of $2,145 and not more than $107 for each day the violation continues.

(lviii) Civil penalty for operating without filing, or in violation of, a stockyard rate schedule, or of a regulation or order of the Secretary made thereunder, codified at 7 U.S.C. 207(g), has a maximum of $2,146 and not more than $107 for each day the violation continues.

(lix) Civil penalty for a stockyard owner, livestock market agency, or dealer, who engages in or uses any unfair, unjustly discriminatory, or deceptive practice or device in connection with determining whether persons should be authorized to operate at the stockyards, or with receiving, marketing, buying, or selling on a commission basis or otherwise, feeding, watering, holding, delivery, shipment, weighing, or handling of livestock, codified at 7 U.S.C. 213(b), has a maximum of $31,459.

(lx) Civil penalty for a stockyard owner, livestock market agency, or dealer, who knowingly fails to obey any order made under the provisions of 7 U.S.C. 211, 212, or 213, codified at 7 U.S.C. 215(a), has a maximum of $2,146.

(lxi) Civil penalty for live poultry dealer violations, codified at 7 U.S.C. 228b–2(b), has a maximum of $91,517.

(lxii) Civil penalty for a violation, codified at 7 U.S.C. 86(c), has a maximum of $307,438.

(lxiii) Civil penalty for failure to comply with certain provisions of the U.S. Warehouse Act, codified at 7 U.S.C. 254, has a maximum of $39,740 per violation if an agricultural product is not involved in the violation.

(2) *Animal and Plant Health Inspection Service.* (i) Civil penalty for a violation of the imported seed provisions of the Federal Seed Act, codified at 7 U.S.C. 1596(b), has a minimum of $107 and a maximum of $2,146.

(ii) Civil penalty for a violation of the Animal Welfare Act, codified at 7 U.S.C. 2149(b), has a maximum of $12,771, and knowing failure to obey a cease and desist order has a civil penalty of $1,915.

(iii) Civil penalty for any person that causes harm to, or interferes with, an animal used for the purposes of official inspection by USDA, codified at 7 U.S.C. 2279e(a), has a maximum of $15,896.

(iv) Civil penalty for a violation of the Swine Health Protection Act, codified at 7 U.S.C. 3805(a), has a maximum of $31,948.

(v) Civil penalty for any person that violates the Plant Protection Act (PPA), or that forges, counterfeits, or, without authority from the Secretary, uses, alters, defaces, or destroys any certificate, permit, or other document

provided for in the PPA, codified a 7 U.S.C. 7734(b)(1), has a maximum of the greater of: $79,480 in the case of any individual (except that the civil penalty may not exceed $1,589 in the case of an initial violation of the PPA by an individual moving regulated articles not for monetary gain), $397,397 in the case of any other person for each violation, $638,556 for all violations adjudicated in a single proceeding if the violations do not include a willful violation, and $1,277,111 for all violations adjudicated in a single proceeding if the violations include a willful violation; or twice the gross gain or gross loss for any violation, forgery, counterfeiting, unauthorized us, defacing, or destruction of a certificate, permit, or other document provided for in the PPA that results in the person deriving pecuniary gain or causing pecuniary loss to another.

(vi) Civil penalty for any person (except as provided in 7 U.S.C. 8309(d)) that violates the Animal Health Protection Act (AHPA), or that forges, counterfeits, or, without authority from the Secretary, uses, alters, defaces, or destroys any certificate, permit, or other document provided under the AHPA, codified at 7 U.S.C. 8313(b)(1), has a maximum of the greater of: $76,279 in the case of any individual, except that the civil penalty may not exceed $1,526 in the case of an initial violation of the AHPA by an individual moving regulated articles not for monetary gain, $381,394 in the case of any other person for each violation, $638,556 for all violations adjudicated in a single proceeding if the violations do not include a willful violation, and $1,277,111 for all violations adjudicated in a single proceeding if the violations include a willful violation; or twice the gross gain or gross loss for any violation, forgery, counterfeiting, unauthorized use, defacing, or destruction of a certificate, permit, or other document provided under the AHPA that results in the person's deriving pecuniary gain or causing pecuniary loss to another person.

(vii) Civil penalty for any person that violates certain regulations under the Agricultural Bioterrorism Protection Act of 2002 regarding transfers of listed agents and toxins or possession and use of listed agents and toxins, codified at 7 U.S.C. 8401(i)(1), has a maximum of $381,394 in the case of an individual and $762,791 in the case of any other person.

(viii) Civil penalty for violation of the Horse Protection Act, codified at 15 U.S.C. 1825(b)(1), has a maximum of $6,294.

(ix) Civil penalty for failure to obey Horse Protection Act disqualification, codified at 15 U.S.C. 1825(c), has a maximum of $12,299.

(x) Civil penalty for knowingly violating, or, if in the business as an importer or exporter, violating, with respect to terrestrial plants, any provision of the Endangered Species Act of 1973, any permit or certificate issued thereunder, or any regulation issued pursuant to section 9(a)(1)(A) through (F), (a)(2)(A) through (D), (c), (d) (other than regulations relating to record keeping or filing reports), (f), or (g), as specified at 16 U.S.C. 1540(a)(1), has a maximum of $57,528 for each violation.

(xi) Civil penalty for knowingly violating, or, if in the business as an importer or exporter, violating, with respect to terrestrial plants, any other regulation under the Endangered Species Act of 1973, as specified at 16 U.S.C. 1540(a)(1), has a maximum of $27,549 for each violation.

(xii) Civil penalty for violating, with respect to terrestrial plants, the Endangered Species Act of 1973, or any regulation, permit, or certificate issued thereunder, as specified at 16 U.S.C. 1540(a)(1), has a maximum of $1,452 for each violation.

(xiii) Civil penalty for knowingly and willfully violating 49 U.S.C. 80502 with respect to the transportation of animals by any rail carrier, express carrier, or common carrier (except by air or water), a receiver, trustee, or lessee of one of those carriers, or an owner or master of a vessel, codified at 49 U.S.C. 80502(d), has a minimum of $181 and a maximum of $924.

(xiv) Civil penalty for a violation of the Commercial Transportation of Equine for Slaughter Act, 7 U.S.C. 1901 note, and its implementing regulations in 9 CFR part 88, as specified in 9 CFR 88.6, has a maximum of $5,468. Each horse transported in violation of 9 CFR part 88 is a separate violation.

(xv) Civil penalty for knowingly violating section 3(d) or 3(f) of the Lacey Act Amendments of 1981, or for violating any other provision provided that, in the exercise of due care, the violator should have known that the plant was taken, possessed, transported, or sold in violation of any underlying law, treaty, or regulation, has a maximum of $28,606 for each violation, as specified in 16 U.S.C. 3373(a)(1) (but if the plant has a market value of less than $382, and involves only the transportation, acquisition, or receipt of a plant taken or possessed in violation of any law, treaty, or regulation of the United States, any Indian tribal law, any foreign law, or any law or regulation of any State, the penalty will not exceed the maximum provided for violation of said law, treaty, or regulation, or $28,606, whichever is less).

(xvi) Civil penalty for violating section 3(f) of the Lacey Act Amendments of 1981, as specified in 16 U.S.C. 3373(a)(2), has a maximum of $715.

(3) *Food and Nutrition Service.* (i) Civil penalty for violating a provision of the Food and Nutrition Act of 2008 (Act), or a regulation under the Act, by a retail food store or wholesale food concern, codified at 7 U.S.C. 2021(a) and (c), has a maximum of $127,712 for each violation.

(ii) Civil penalty for trafficking in food coupons, codified at 7 U.S.C. 2021(b)(3)(B), has a maximum of $46,021 for each violation, except that the maximum penalty for violations occurring during a single investigation is $82,871.

(iii) Civil penalty for the sale of firearms, ammunitions, explosives, or controlled substances for coupons, codified at 7 U.S.C. 2021(b)(3)(C), has a maximum of $41,436 for each violation, except that the maximum penalty for violations occurring during a single investigation is $82,871.

(iv) Civil penalty for any entity that submits a bid to supply infant formula to carry out the Special Supplemental Nutrition Program for Women, Infants and Children and discloses the amount of the bid, rebate, or discount practices in advance of the bid opening or for any entity that makes a statement prior to the opening of bids for the purpose of influencing a bid, codified at 42 U.S.C. 1786(h)(8)(H)(i), has a maximum of $195,054,878.

(v) Civil penalty for a vendor convicted of trafficking in food instruments, codified at 42 U.S.C. 1786(o)(1)(A) and 42 U.S.C. 1786(o)(4)(B), has a maximum of $16,865 for each violation, except that the maximum penalty for violations occurring during a single investigation is $67,461.

(vi) Civil penalty for a vendor convicted of selling firearms, ammunition, explosive, or controlled substances in exchange for food instruments, codified at 42 U.S.C. 1786(o)(1)(B) and 42 U.S.C. 1786(o)(4)(B), has a maximum of $16,451 for each violation, except that the maximum penalty for violations occurring during a single investigation is $67,461.

(4) *Food Safety and Inspection Service.* (i) Civil penalty for certain violations under the Egg Products Inspection Act, codified at 21 U.S.C. 1041(c)(1)(A), has a maximum of $10,066 for each violation.

(ii) [Reserved]

(5) *Forest Service.* (i) Civil penalty for willful disregard of the prohibition against the export of unprocessed timber originating from Federal lands, codified at 16 U.S.C. 620d(c)(1)(A), has a maximum of $1,035,909 per violation or three times the gross value of the unprocessed timber, whichever is greater.

(ii) Civil penalty for a violation in disregard of the Forest Resources Conservation and Shortage Relief Act or the regulations that implement such Act regardless of whether such violation caused the export of unprocessed timber originating from Federal lands, codified in 16 U.S.C. 620d(c)(2)(A)(i), has a maximum of $155,387 per violation.

(iii) Civil penalty for a person that should have known that an action was a violation of the Forest Resources Conservation and Shortage Relief Act or the regulations that implement such Act regardless of whether such violation caused the export of unprocessed timber originating from Federal lands, codified at 16 U.S.C. 620d(c)(2)(A)(ii), has a maximum of $103,591 per violation.

(iv) Civil penalty for a willful violation of the Forest Resources Conservation and Shortage Relief Act or the regulations that implement such Act regardless of whether such violation caused the export of unprocessed timber originating from Federal lands, codified in 16 U.S.C. 620d(c)(2)(A)(iii), has a maximum of $1,035,909.

(v) Civil penalty for a violation involving protections of caves, codified at 16 U.S.C. 4307(a)(2), has a maximum of $22,640.

(6) [Reserved]

(7) *Federal Crop Insurance Corporation.* (i) Civil penalty for any person who willfully and intentionally provides any false or inaccurate information to the Federal Crop Insurance Corporation or to an approved insurance provider with respect to any insurance plan or policy that is offered under the authority of the Federal Crop Insurance Act, or who fails to comply with a requirement of the Federal Crop Insurance Corporation, codified in 7 U.S.C. 1515(h)(3)(A), has a maximum of the greater of: The amount of the pecuniary gain obtained as a result of the false or inaccurate information or the noncompliance; or $13,437.

(ii) [Reserved]

(8) *Rural Housing Service.* (i) Civil penalty for a violation of section 536 of Title V of the Housing Act of 1949, codified in 42 U.S.C. 1490p(e)(2), has a maximum of $220,212 in the case of an individual, and a maximum of $2,202,123 in the case of an applicant other than an individual.

(ii) Civil penalty for equity skimming under section 543(a) of the Housing Act of 1949, codified in 42 U.S.C. 1490s(a)(2), has a maximum of $39,740.

(iii) Civil penalty under section 543b of the Housing Act of 1949 for a violation of regulations or agreements made in accordance with Title V of the Housing Act of 1949, by submitting false information, submitting false certifications, failing to timely submit information, failing to maintain real property in good repair and condition, failing to provide acceptable management for a project, or failing to comply with applicable civil rights laws and regulations, codified in 42 U.S.C. 1490s(b)(3)(A), has a maximum of the greater of: Twice the damages USDA, guaranteed lender, or project that is secured for a loan under Title V suffered or would have suffered as a result of the violation; or $79,480 per violation.

(9) [Reserved]

(10) *Commodity Credit Corporation.* (i) Civil penalty for willful failure or refusal to furnish information, or willful furnishing of false information under of section 156 of the Federal Agricultural Improvement and Reform Act of 1996, codified at 7 U.S.C. 7272(g)(5), has a maximum of $17,472 for each violation.

(ii) Civil penalty for willful failure or refusal to furnish information or willful furnishing of false data by a processor, refiner, or importer of sugar, syrup and molasses under section 156 of the Federal Agriculture Improvement and Reform Act of 1996, codified at 7 U.S.C. 7272(g)(5), has a maximum of $17,472 for each violation.

(iii) Civil penalty for filing a false acreage report that exceeds tolerance under section 156 of the Federal Agriculture Improvement and Reform Act of 1996, codified at 7 U.S.C. 7272(g)(5), has a maximum of $17,472 for each violation.

(iv) Civil penalty for knowingly violating any regulation of the Secretary of the Commodity Credit Corporation pertaining to flexible marketing allotments for sugar under section 359h(b) of the Agricultural Adjustment Act of 1938, codified at 7 U.S.C. 1359hh(b), has a maximum of $12,771 for each violation.

(v) Civil penalty for knowing violation of regulations promulgated by the Secretary pertaining to cotton insect eradication under section 104(d) of the Agricultural Act of 1949, codified at 7 U.S.C. 1444a(d), has a maximum of $15,733 for each offense.

(11) *Office of the Secretary.* (i) Civil penalty for making, presenting, submitting or causing to be made, presented or submitted, a false, fictitious, or fraudulent claim as defined under the Program Fraud Civil Remedies Act of 1986, codified at 31 U.S.C. 3802(a)(1), has a maximum of $12,538.

(ii) Civil penalty for making, presenting, submitting or causing to be made, presented or submitted, a false, fictitious, or fraudulent written statement as defined under the Program Fraud Civil Remedies Act of 1986, codified at 31 U.S.C. 3802(a)(2), has a maximum of $12,538.

John Rapp,

Director, Office of Budget and Program Analysis.

[FR Doc. 2022–03163 Filed 2–14–22; 8:45 am]

BILLING CODE 3410–90–P

DEPARTMENT OF AGRICULTURE

Agricultural Marketing Service

7 CFR Part 946

[Doc. No. AMS–SC–20–0095; SC21–946–1 FR]

Irish Potatoes Grown in Washington; Termination of Marketing Order 946

AGENCY: Agricultural Marketing Service, USDA.

ACTION: Final rule; termination of order.

SUMMARY: This final rule terminates the Federal marketing order regulating the handling of Irish potatoes grown in Washington, and the rules and regulations issued thereunder. The marketing order is administered locally by the State of Washington Potato Committee (Committee), which unanimously recommended its termination at a meeting held on June 11, 2020. This recommendation is based on the Committee's determination that the marketing order is no longer an effective marketing tool for the Washington potato industry and that termination best serves the current needs of the industry by eliminating the costs associated with its operation.

DATES: Effective March 2, 2022.

FOR FURTHER INFORMATION CONTACT: Gregory A. Breasher, Marketing Specialist, or Gary Olson, Regional Director, Market Development Division, Specialty Crops Program, AMS, USDA; Telephone: (503) 326–2054 or Email: *Gregory.Breasher@usda.gov* or *GaryD.Olson@usda.gov.*

Small businesses may request information on complying with this regulation by contacting Richard Lower, Market Development Division, Specialty Crops Program, AMS, USDA, 1400 Independence Avenue SW, STOP 0237, Washington, DC 20250–0237;

Telephone: (202) 720–2491, Fax: (202) 720–8938, or Email: *Richard.Lower@usda.gov.*

SUPPLEMENTARY INFORMATION: This action, pursuant to 5 U.S.C. 553, finalizes the termination of regulations issued to carry out a marketing order as defined in 7 CFR 900.2(j). This final rule is issued under Marketing Order No. 946, as amended (7 CFR part 946), regulating the handling of potatoes grown in Washington. Part 946 (referred to as the ''Order'') is effective under the Agricultural Marketing Agreement Act of 1937, as amended (7 U.S.C. 601–674), hereinafter referred to as the ''Act.'' This action is governed by § 608c(16)(A) of the Act. The Committee locally administers the Order and is comprised of producers and handlers operating within the production area.

The Department of Agriculture (USDA) is issuing this final rule in conformance with Executive Orders 12866 and 13563. Executive Orders 12866 and 13563 direct agencies to assess all costs and benefits of available regulatory alternatives and, if regulation is necessary, to select regulatory approaches that maximize net benefits (including potential economic, environmental, public health and safety effects, distributive impacts and equity). Executive Order 13563 emphasizes the importance of quantifying both costs and benefits, reducing costs, harmonizing rules, and promoting flexibility. This action falls within a category of regulatory actions that the Office of Management and Budget (OMB) exempted from Executive Order 12866 review.

In addition, this final rule has been reviewed under Executive Order 13175—Consultation and Coordination with Indian Tribal Governments, which requires agencies to consider whether their rulemaking actions would have tribal implications. Agricultural Marketing Service (AMS) has determined this final rule is unlikely to have substantial direct effects on one or more Indian tribes, on the relationship between the Federal Government and Indian tribes, or on the distribution of power and responsibilities between the Federal Government and Indian tribes.

This final rule has been reviewed under Executive Order 12988, Civil Justice Reform. This final rule is not intended to have retroactive effect.

The Act provides that administrative proceedings must be exhausted before parties may file suit in court. Under section 608c(15)(A) of the Act, any handler subject to a marketing order may file with USDA a petition stating that the marketing order, any provision of the marketing order, or any obligation imposed in connection with the marketing order is not in accordance with law and request a modification of the marketing order or to be exempted therefrom. A handler is afforded the opportunity for a hearing on the petition. After the hearing, USDA would rule on the petition. The Act provides that the district court of the United States in any district in which the handler is an inhabitant, or has his or her principal place of business, has jurisdiction to review USDA's ruling on the petition, provided an action is filed not later than 20 days after the date of the entry of the ruling.

This final rule terminates the Order and the rules and regulations issued thereunder. The Order contains authority for the regulation of Irish potatoes grown in Washington. At a virtual meeting held on June 11, 2020, the Committee unanimously recommended termination of the Order.

Section 946.63(b) of the Order provides that USDA terminates or suspends any or all provisions of the Order when a finding is made that the Order does not tend to effectuate the declared policy of the Act. In addition, section 608c(16)(A) of the Act provides that USDA terminates or suspends the operation of any order whenever the order or any provision thereof obstructs or does not tend to effectuate the declared policy of the Act. Additionally, USDA is required to notify Congress no later than 60 days before the date the Order would be terminated.

Marketing Order No. 946 has been in effect since 1949 and has provided the potato industry in Washington with authority for grade, size, quality, maturity, pack, and container regulations, as well as authority for mandatory product inspection. The Committee has met regularly to evaluate the current status of the Washington potato industry and to consider recommendations for modification, suspension, or termination of the Order's regulatory requirements, which have been issued on a continuing basis. Committee meetings are open to the public and interested persons may express their views at these meetings. The USDA reviews Committee recommendations, including information provided by the Committee and from other available sources, and determines whether modification, suspension, or termination of the Order's regulatory requirements would tend to effectuate the declared policy of the Act.

Handling regulations requiring potatoes to be inspected and meet mandatory minimum grade, size, maturity, quality, pack, and container requirements were in effect for all types of potatoes until 2010. USDA temporarily suspended the handling regulations for Russet type potatoes for one year, effective July 24, 2010 (75 FR 43042), and subsequently extended that suspension indefinitely, effective July 1, 2011 (76 FR 27850). Further, USDA temporarily suspended the handling regulations for yellow fleshed and white type potatoes effective October 24, 2013 (78 FR 62967), also extending that suspension indefinitely, effective July 1, 2014 (79 FR 26109). Lastly, USDA indefinitely suspended the handling regulations for all red types of potatoes, effective February 15, 2014 (79 FR 8253). The cumulative effect of the various suspensions was the total suspension of handling regulations for all fresh potatoes under the Order after July 1, 2014. All of the suspensions listed above were enacted upon the Committee's recommendation.

Following these regulatory suspensions, the Committee continued to levy assessments in order to maintain its functionality. The Committee felt that it should continue to fund its full operational capability in order to collect handler reports, track industry data, and preserve the authority to regulate handling, should that become relevant to the industry again sometime in the future.

The Committee met on January 22 and June 11, 2020, to discuss the current marketing environment of the Washington potato industry and the status of the Order. The Committee determined that the suspension of the Order's handling regulations has not negatively impacted the industry and that there is no longer a need for the Order. In addition, the Committee concluded that the data collection and reporting functions of the Order are duplicative of the services provided to the industry by the Washington State Potato Commission and that termination of the Order will not materially impact the collection and dissemination of essential industry data.

At the meeting held via conference call on June 11, 2020, the Committee unanimously voted in favor of recommending that USDA terminate the Order. In addition, the Committee recommended the Order's reporting and assessment requirements—the only regulatory activities still in effect—be suspended while USDA processes termination of the Order. The recommendation to suspend all remaining Order activities was a separate regulatory action from this rule. A final rule suspending the Order's reporting and assessment requirements

was published in the **Federal Register** February 24, 2021 (86 FR 11091).

Final Regulatory Flexibility Analysis

Pursuant to requirements set forth in the Regulatory Flexibility Act (RFA) (5 U.S.C. 601–612), AMS has considered the economic impact of this final rule on small entities. Accordingly, AMS has prepared this final regulatory flexibility analysis.

The purpose of the RFA is to fit regulatory actions to the scale of businesses subject to such actions in order that small businesses will not be unduly or disproportionately burdened. Marketing orders issued pursuant to the Act, and the rules issued thereunder, are unique in that they are brought about through group action of essentially small entities acting on their own behalf.

There are approximately 26 handlers of Washington potatoes and approximately 250 potato producers in the production area subject to regulation by the Order.

Small agricultural service firms are defined by the Small Business Administration (13 CFR 121.201) as those having annual receipts of less than $30,000,000, and small agricultural producers are defined as those having annual receipts of less than $1,000,000.

According to USDA Market News, the average shipping point price for fresh Washington potatoes during the 2019 shipping season was approximately $15.79 per hundredweight. The Committee reported that 2019–2020 marketing year fresh potato shipments were 9,687,170 hundredweight. Using the average price and shipment information, the number of handlers, and assuming a normal distribution, most handlers had average annual receipts of less than $30,000,000 ($15.79 times 9,687,170 hundredweight equals $152,960,414, divided by 26 handlers equals $5,883,093 per handler). Thus, AMS concludes that the majority of handlers would meet the SBA definition of a small business.

USDA National Agricultural Statistics Service reported an average producer price of $8.20 per hundredweight for the 2019 crop. Given the number of Washington potato producers, and assuming a normal distribution, average annual producer revenue is below $1,000,000 ($8.20 times 9,687,170 hundredweight equals $79,434,794, divided by 250 producers equals $317,739 per producer). Therefore, most producers of fresh Washington potatoes may be classified as small businesses under the SBA definition.

This rule terminates the Federal marketing order for Irish potatoes grown in Washington, and the rules and regulations issued thereunder. The Order contains authority to regulate the handling of Irish potatoes grown in Washington. The Committee determined that regulating the handling of potatoes under the Order is no longer an effective marketing tool for the Washington potato industry. Evidence from the past several years of operating with suspended handling regulations showed that potatoes can be shipped from the production area in the absence of the Order's minimum requirements without a negative economic impact on the industry.

Secondly, the Committee determined that the data collection and reporting function of the Order is duplicative of the services provided to the industry by the Washington State Potato Commission. The termination of the Order will not materially impact the collection and dissemination of essential industry data to Washington state potato growers.

As such, the Committee concluded that the costs associated with the administration of the Order outweigh the benefits of continuing the Order. This conclusion is based on the Committee's analysis of the 6-year period of regulatory suspension and findings that termination is not expected to negatively impact the marketing of fresh Washington potatoes because this action reduces the costs to both handlers and producers. Therefore, in an action taken on June 11, 2020, the Committee unanimously recommended that USDA terminates the Order.

Section 946.63(b) of the Order provides that USDA terminates or suspends any or all provisions of the Order when a finding is made that the Order does not tend to effectuate the declared policy of the Act. Furthermore, § 608c(16)(A) of the Act provides that USDA shall terminate or suspend the operation of any order whenever the order or provision thereof obstructs or does not tend to effectuate the declared policy of the Act. An additional provision requires that Congress be notified no later than 60 days before the date the order would be terminated.

The Committee considered alternatives to this rule, including taking no action (which would keep the Order active but with the handling regulations suspended) and suspending all of the Order's remaining regulatory provisions but not terminating the Order. The Committee determined that neither option was a viable long-term solution and subsequently recommended that the Order be terminated.

In accordance with the Paperwork Reduction Act of 1995 (44 U.S.C. Chapter 35), the Order's information collection requirements have been previously approved by OMB and contained in OMB No. 0581–0178 Vegetable and Specialty Crops. Termination of the Order, and the reporting requirements prescribed therein, will eliminate the reporting burden on Washington potato handlers. Handlers will no longer file forms with the Committee, which will reduce industry expenses and save an estimated 9.7 hours per handler per year. This rule will not impose any additional reporting or recordkeeping requirements on either small or large potato handlers. As with all Federal marketing order programs, reports and forms are periodically reviewed to reduce information requirements and duplication by industry and public sector agencies. In addition, USDA has not identified any relevant Federal rules that duplicate, overlap or conflict with this rule.

AMS is committed to complying with the E-Government Act, to promote the use of the internet and other information technologies to provide increased opportunities for citizen access to Government information and services, and for other purposes.

The Committee's meetings are widely publicized throughout the Washington potato industry, and all interested persons are invited to attend the meetings and participate in Committee deliberations on all issues. Like all Committee meetings, the January 22 and June 11, 2020, meetings were public meetings, and all entities, both large and small, were able to express their views on these issues. Interested persons were invited to submit comments on a proposed rule, including the regulatory and information collection impacts of this action on small businesses.

A small business guide on complying with fruit, vegetable, and specialty crop marketing agreements and orders may be viewed at: *https://www.ams.usda.gov/rules-regulations/moa/small-businesses.* Any questions about the compliance guide should be sent to Richard Lower at the previously mentioned address in the **FOR FURTHER INFORMATION CONTACT** section.

A proposed rule inviting comments regarding termination of the Order was published in the **Federal Register** on September 7, 2021 (86 FR 49930). AMS distributed the proposed rule to State of Washington potato industry members. In addition, the rule was made available on the internet by AMS and the Office of the Federal Register. The proposed rule provided a 60-day comment period

for the interested parties to comment, which ended on November 8, 2021. Two comments were received in support of the termination.

Based on the foregoing, and pursuant to § 608c(16)(A) of the Act and § 946.63 of the Order, it is hereby found that the Federal marketing Order 946 regulating the handling of Irish potatoes grown in Washington does not tend to effectuate the declared policy of the Act and is therefore terminated.

Following termination, trustees will be appointed to conclude and liquidate the Committee affairs and will continue in that capacity until discharged by USDA. Section 608c(16)(A) of the Act requires USDA to notify Congress 60 days in advance of termination of a Federal marketing order. USDA notified Congress on December 2, 2021.

List of Subjects in 7 CFR Part 946

Marketing agreements, Potatoes, Reporting and recordkeeping requirements.

PART 946—[REMOVED]

■ For the reasons set forth in the preamble, and under the authority of 7 U.S.C. 601–674, 7 CFR part 946 is removed.

Erin Morris,

Associate Administrator, Agricultural Marketing Service.

[FR Doc. 2022–03177 Filed 2–14–22; 8:45 am]

BILLING CODE 3410–02–P

DEPARTMENT OF TRANSPORTATION

Federal Aviation Administration

14 CFR Part 39

[Docket No. FAA–2021–0259; Project Identifier AD–2020–01128–E; Amendment 39–21900; AD 2022–02–03]

RIN 2120–AA64

Airworthiness Directives; CFM International, S.A. Turbofan Engines

AGENCY: Federal Aviation Administration (FAA), DOT.

ACTION: Final rule.

SUMMARY: The FAA is superseding Airworthiness Directive (AD) 2013–26–01 for all CFM International, S.A. (CFM) CFM56–3 and CFM56–7B model turbofan engines with a certain accessory gearbox assembly (AGB) not equipped with a dynamic oil seal assembly in the handcranking pad. AD 2013–26–01 required an independent inspection to verify re-installation of the handcranking pad cover after removal of the pad cover for maintenance. This AD was prompted by a dual engine loss of oil event and 42 prior events of total loss of engine oil during flight. This AD requires independent inspection to verify re-installation of the AGB handcranking pad cover after maintenance. This AD also requires the replacement of the affected AGB as a terminating action to the inspection requirement. The FAA is issuing this AD to address the unsafe condition on these products.

DATES: This AD is effective March 22, 2022.

ADDRESSES: For service information identified in this final rule, contact CFM International, S.A., Aviation Operations Center, 1 Neumann Way, M/D Room 285, Cincinnati, OH 45125; phone: (877) 432–3272; email: *fleetsupport@ge.com.* You may view this service information at the FAA, Airworthiness Products Section, Operational Safety Branch, 1200 District Avenue, Burlington, MA 01803. For information on the availability of this material at the FAA, call (817) 222–5110. It is also available at *https://www.regulations.gov* by searching for and locating Docket No. FAA–2021–0259.

Examining the AD Docket

You may examine the AD docket at *https://www.regulations.gov* by searching for and locating Docket No. FAA–2021–0259; or in person at Docket Operations between 9 a.m. and 5 p.m., Monday through Friday, except Federal holidays. The AD docket contains this final rule, any comments received, and other information. The address for Docket Operations is U.S. Department of Transportation, Docket Operations, M–30, West Building Ground Floor, Room W12–140, 1200 New Jersey Avenue SE, Washington, DC 20590.

FOR FURTHER INFORMATION CONTACT: Kevin Clark, Aviation Safety Engineer, ECO Branch, FAA, 1200 District Avenue, Burlington, MA 01803; phone: (781) 238–7088; fax: (781) 238–7199; email: *kevin.m.clark@faa.gov.*

SUPPLEMENTARY INFORMATION:

Background

The FAA issued a notice of proposed rulemaking (NPRM) to amend 14 CFR part 39 to supersede AD 2013–26–01, Amendment 39–17710 (78 FR 79295, December 30, 2013), (AD 2013–26–01). AD 2013–26–01 applied to all CFM CFM56–3 and CFM56–7B series turbofan engines with certain AGBs not equipped with a dynamic oil seal in the handcranking pad assembly. The NPRM published in the **Federal Register** on May 3, 2021 (86 FR 23301). The NPRM was prompted by a dual engine loss of oil event and 42 prior events of total loss of engine oil during flight. In the NPRM, the FAA proposed to retain certain requirements of AD 2013–26–01. The NPRM proposed to require the performance of an independent inspection to verify re-installation of the AGB handcranking pad cover after maintenance. Alternatively, the NPRM proposed to require the insertion of an independent inspection as a required inspection item in the approved continuous airworthiness maintenance program for the aircraft not later than the next time the AGB handcranking pad cover is removed for maintenance.

The NPRM also proposed to remove the optional terminating action in AD 2013–26–01 and add a mandatory terminating action for certain model turbofan engines, requiring the removal and replacement of an affected AGB with an AGB that incorporates the dynamic oil seal in the handcranking pad cover assembly. For all CFM56–3 and the majority of CFM56–7B turbofan engine models, the NPRM proposed to require replacement of the AGB as a mandatory terminating action to the inspection requirement. The NPRM does not require this terminating action for CFM56–7B27A, CFM56–7B27A/3 and CFM56–7B27AE model turbofan engines because these model engines, which are installed only in military airplanes, do not have a replacement AGB eligible for installation. The FAA is issuing this AD to address the unsafe condition on these products.

Discussion of Final Airworthiness Directive

Comments

The FAA received comments from seven commenters. The commenters were Alaska Airlines, Inc. (Alaska), American Airlines (American), Air Line Pilot Association, International (ALPA), CFM, Delta Air Lines, Inc. (Delta), Jet Engine Technology Corporation (Jet Engine Technology), and United Airlines (United). The following presents the comments received on the NPRM and the FAA's response to each comment.

Request To Revise Service Bulletin (SB) References To Allow On-Wing Procedure

Alaska requested that the FAA revise the definition in paragraph (i)(3)(ii) of this AD to include an affected AGB that has been reworked and reidentified to a part number (P/N) eligible for installation, as applicable to the removed P/N, in accordance with an FAA approved CFM International SB.

Alaska also commented that CFM expects to release CFM56–7B S/B 72–1023 in September 2021 and this SB would allow for introduction of AGB part number 340–046–528–0. Alaska also noted that CFM plans to release Revision 9 of CFM International CFM56–7B S/B 72–0564 to allow on-wing installation of the dynamic oil seal in the handcranking pad cover assembly.

American also requested that the FAA revise the definition in paragraph (i)(3)(ii) of this AD to include procedures from future FAA approved revisions of CFM SBs. American noted that CFM plans to release Revision 9 of CFM International CFM56–7B S/B 72–0564 to allow on-wing installation of the dynamic oil seal in the handcranking pad cover assembly. American also requested that the FAA incorporate the maintenance procedures from Revision 9 of CFM International SB CFM56–7B S/B 72–0564 and CFM International SB CFM56–7B S/B 72–1071 into the proposed AD. American noted the advantage that Revision 9 of CFM International SB CFM56–7B S/B 72–0564 would allow the AGBs to be modified on-wing.

Delta requested that the FAA urge CFM to make an on-wing procedure available to operators. Delta further requested that the FAA modify the definition of an affected AGB that has been re-worked and re-identified to a part number eligible for installation in paragraph (i)(3)(ii) of the NPRM by removing the specific revision numbers and effective dates from the SBs in this paragraph. Delta commented that Revision 7 is the current revision for CFM International SB CFM56–7B S/B 72–0879, however, AD 2013–26–01 does not list a revision number for an AGB that is eligible for installation in the terminating action. Further, Delta stated that European Union Aviation Safety Agency (EASA) AD 2020–0261 allows for the modification and re-identification of an affected AGB using future revisions of CFM International SB CFM56–7B S/B 72–0564.

In response to the comments from Alaska, American, and Delta, the FAA changed the definition of a part eligible for installation in paragraph (i)(3)(ii) of this AD to ''An affected AGB that, using an FAA-approved procedure, has been re-worked with a dynamic oil seal in the starter drive pad and re-identified with a new part number not listed in paragraph (i)(3)(i) of this AD.'' This change allows operators to use procedures in service bulletins that contain an FAA-approved method for installing the dynamic oil seal in the handcranking pad cover assembly.

Request To Update the Definition of an Engine Shop Visit

American requested that the FAA update the definition of an engine shop visit by adding the following additional exceptions to the definition in paragraph (i)(1) of this AD:

''(iii) The removal of the fan disk or the fan disk and booster spool as an assembly.

(iv) Accomplishment of a top/bottom case by removal of the HPC forward and aft stator cases.''

The FAA disagrees with revising the definition as proposed by American. The removal of the fan, which includes the fan disk and booster major module, is excluded from the definition of an engine shop visit in paragraph (i)(1)(ii) of this AD. Regarding the addition of an exception to the definition of an engine shop visit to include accomplishment of a top/bottom case by removal of the high-pressure compressor (HPC) forward and aft stator cases, American did not provide rationale for this requested change. The FAA finds that incorporating this requested exception by the commenter would unnecessarily delay the accomplishment of the required actions of this AD.

Request To Update the Definition of a Part Eligible for Installation

Delta requested that the FAA remove the term ''using'' from the following sentence in paragraph (i)(3)(ii): ''An affected AGB that has been reworked and reidentified to a part number eligible for installation using, as applicable, CFM SB 72–0879, Revision 6, dated March 1, 2018, or SB 72–0564 Revision 8, dated May 6, 2020.'' Delta reasoned that the cited service information does not specify which steps or paragraphs are required for compliance.

The FAA has changed the definition in paragraph (i)(3)(ii) of this AD to allow the use of FAA-approved methods for installing the dynamic oil seal in the handcranking pad cover assembly rather than mandating specific procedures.

Request To Incorporate FAA Advisory Circular (AC) Into CFM SBs

American requested that CFM incorporate FAA AC 20–176A into its SBs to distinguish which steps in an SB will have a direct effect on detecting, preventing, resolving, or eliminating the unsafe condition identified in an AD. American commented further that the application of AC 20–176A to previous CFM SBs was successful in reducing global requests for alternative methods of compliance (AMOCs) and streamlining the accomplishment of key tasks while meeting strict regulatory compliance.

Delta requested that the FAA urge CFM to incorporate FAA AC 20–176A into its SBs. Delta commented that paragraph (i)(3)(ii) defines an affected AGB that has been reworked and reidentified to a part number eligible for installation using, as applicable, CFM International SB CFM56–7B S/B 72–0879, Revision 6, dated March 1, 2018, or CFM International SB CFM56–7B S/B 72–0564, Revision 8, dated May 6, 2020. This definition does not specify which steps or paragraphs are required for compliance. Delta requested the FAA urge CFM to revise these SBs to incorporate AC 20–176A to distinguish which steps in an SB will have a direct effect on detecting, preventing, resolving, or eliminating the unsafe condition identified in an AD.

In response to these comments from Delta and American, the FAA has changed the definition of an AGB eligible for installation in paragraph (i)(3)(ii) of this AD to allow the use of FAA-approved methods for installing the dynamic oil seal in the handcranking pad cover assembly rather than mandating specific procedures. Since the SBs noted by the commenters are not required for compliance within this AD, the FAA does not find it necessary to recommend that the manufacturer incorporate sections from the guidance contained in AC 20–176A in the referenced SBs.

Request To Revise SB References

CFM requested that the FAA revise the specified service information in paragraph (i)(3)(ii) of the NPRM by referencing Revision 7 of CFM International SB CFM56–7B S/B 72–0879, dated February 10, 2021. CFM also requested that the FAA change the date of CFM International SB CFM56–7B S/B 72–1129 from May 5, 2020 to May 6, 2020.

In response to this comment, the FAA has revised paragraph (i)(3)(ii) by adding a Note, which refers to Revision 7 of CFM International SB CFM 56–7B S/B 72–0879, dated February 10, 2021. The FAA is not requiring use of CFM International SB CFM 56–7B S/B 72–0879 to rework the dynamic oil seal in the handcranking pad cover assembly. The addition of Note 2 to paragraph (i)(3)(ii) of this AD includes reference to procedures to install a dynamic oil seal in the handcranking pad cover assembly, which can be found in CFM International SB CFM56–3 S/B 72–1129, Revision 7, dated May 6, 2020. The FAA also updated the publication date of CFM International CFM56–7B S/B 72–1129 to May 6, 2020.

Request To Revise Reference to Engine Models

CFM requested that the FAA update the AD to replace references to ''CFM56–3B'' model turbofan engines with ''CFM56–3'' when referring to all CFM56–3, CFM56–3B and CFM56–3C model turbofan engines.

The FAA notes the reference to ''CFM56–3B'' that existed in the preamble of the NPRM has been updated to ''CFM56–3'' in the preamble of this final rule.

Request To Clarify the Mandatory Terminating Action

CFM and United requested that the FAA clarify if paragraph (h), Mandatory Terminating Action, requires removal and replacement of the AGB or if the AGB can be re-worked and re-identified. The commenters indicated that there is an on-wing re-work procedure that is being developed to install the dynamic oil seal in the handcranking pad cover assembly, and using only the term ''replace'' may prevent the use of this re-work for compliance. United also requested that the FAA clarify whether compliance with the mandatory terminating action can be achieved only by removing and replacing the AGB, or if re-working and re-identifying the AGB, per the instructions in CFM International CFM56–7B S/B 72–0564 and CFM International SB CFM56–7B S/B 72–0879 for the CFM56–7B engine fleet is acceptable.

The FAA agrees that re-working and re-identifying the AGB on-wing to install a dynamic oil seal in the handcranking pad cover assembly resolves the unsafe condition. The FAA has revised paragraph (i)(2)(ii) in this final rule to allow re-work and re-identification of the affected AGB to a part eligible for installation.

Request To Modify Compliance Time for Mandatory Terminating Action

Delta requested that the FAA modify the compliance time for AGB replacement in Mandatory Terminating Action, paragraph (h)(2), of the proposed AD for affected CFM56–7B model turbofan engines to be consistent with the requirement for CFM56–3 model turbofan engines. Delta noted that both engine models are subject to the same unsafe condition.

The FAA disagrees with modifying the mandatory terminating action compliance time in paragraph (h)(2) for CFM56–7B model turbofan engines to be consistent with the mandatory terminating action compliance time for CFM56–3 model turbofan engines. The fleets using these engine models have differences in utilization and logistics that require different compliance end dates to address the unsafe condition.

Request for Alternative Procedure for Compliance

Jet Engine Technology commented that it has attempted to purchase the dynamic oil seal, part number 333–089–185–000, listed in CFM International SB CFM56–7B S/B 72–1129, Revision 7, but was informed it was out of stock as of May 26, 2021. According to Jet Engine Technology, there was a 360-day lead time to obtain this part. Jet Engine Technology indicated that due to the unavailability of the parts and because the AD is mandating the terminating action at next shop visit after the effective date of the AD, it will not be possible for an FAA-certified repair station to return the engine back to service. Jet Engine Technology requested information pertaining to other types of procedures that can be done to return the engine to service after a shop visit.

CFM has confirmed to the FAA that parts will be available to suppliers, operators, and repair stations to install an AGB with the dynamic oil seal in the handcranking cover pad assembly.

Request To Delay Publication of This AD

United and CFM requested that the FAA delay publication of this AD. United requested that the FAA wait until after CFM has made on-wing instructions available for accomplishing the AGB re-work and re-identification because CFM International CFM56–7B SB 72–0564, Revision 8, dated May 6, 2020, and CFM International CFM56–7B S/B 72–0879, Revision 6, dated March 1, 2018 do not contain instructions for on-wing accomplishment. CFM requested that the FAA delay publication until Revision 9 of CFM International CFM56–7B S/B 72–0564 and the initial version of CFM International CFM56–7B S/B 72–1071 are published as these SBs will provide instructions for the on-wing modification to install the dynamic oil seal in the handcranking pad cover assembly.

The FAA disagrees with delaying publication of this AD based on the anticipated issuance of CFM service information. Publication of this AD at this time is necessary to address the unsafe condition. However, the FAA has updated this AD, in response to similar comments, to allow for any FAA approved method, including an on-wing procedure, to install an AGB with a dynamic oil seal in the handcranking pad cover assembly.

Request for Clarification on Compliant AGB Part Numbers

United requested that the FAA clarify whether CFM engines that have compliant AGB part numbers installed (whether by removal and replacement or by re-working and re-identifying the AGB) are required to have the independent inspection of the AGB handcranking pad cover performed to verify re-installation after maintenance.

As set forth in paragraph (h), Mandatory Terminating Action, the requirements of paragraph (g) of this AD are terminated after the accomplishment of the mandatory terminating action. Further, paragraph (f) of this AD mandates compliance with the required actions, unless already done.

Support for the NPRM

ALPA supported the NPRM without change.

Conclusion

The FAA reviewed the relevant data, considered any comments received, and determined that air safety requires adopting the AD as proposed. Accordingly, the FAA is issuing this AD to address the unsafe condition on these products. Except for minor editorial changes, and any other changes described previously, this AD is adopted as proposed in the NPRM. None of the changes will increase the economic burden on any operator.

Related Service Information

The FAA reviewed CFM International Service Bulletin (SB) CFM56–7B S/B 72–0879, Revision 7, dated February 10, 2021 (CFM SB 72–0879); CFM International SB CFM56–3 S/B 72–1129, Revision 7, dated May 6, 2020 (CFM SB 72–1129); CFM International SB CFM56–7B S/B 72–0564 Revision 9, dated December 3, 2021 (CFM SB 72–0564); and CFM56–7B S/B 72–1071, initial issue, dated December 3, 2021 (CFM SB 72–1071). CFM SB 72–1129 describes procedures for the introduction of a new starter drive pad, new handcranking cover assembly, and re-working and re-identifying an AGB installed on CFM56–3 model turbofan engines. CFM SB 72–0879, CFM SB 72–0564 and CFM SB 72–1071 describe procedures for the introduction of a new starter drive pad, new handcranking cover, and re-working and re-identifying an AGB installed on CFM56–7B model turbofan engines. This service information is reasonably available because the interested parties have access to it through their normal course of business or by the means identified in **ADDRESSES**.

Costs of Compliance

The FAA estimates that this AD affects 700 engines installed on airplanes of U.S. registry. The FAA estimates that the majority of operators will perform the repair and re-identification of the AGB rather than replace the AGB with a zero hour part. For the purpose of this cost estimate, the FAA estimates that 95% of AGBs will be repaired and re-identified while 5% of AGBs will be replaced with a zero hour AGB.

The FAA estimates the following costs to comply with this AD:

ESTIMATED COSTS

Action	Labor cost	Parts cost	Cost per product	Cost on U.S. operators
Independent Inspection	1 work-hour × $85 per hour = $85	$0	$85	$59,500
Insert inspection item into aircraft maintenance program.	1 work-hour × $85 per hour = $85	0	85	59,500
Re-work and re-identify AGB	4 work-hours × $85 per hour = $340	12,000	12,340	8,206,100
Replace AGB with zero hour AGB	4 work-hours × $85 per hour = $340	526,700	527,040	18,446,400

Authority for This Rulemaking

Title 49 of the United States Code specifies the FAA's authority to issue rules on aviation safety. Subtitle I, Section 106, describes the authority of the FAA Administrator. Subtitle VII, Aviation Programs, describes in more detail the scope of the Agency's authority.

The FAA is issuing this rulemaking under the authority described in Subtitle VII, Part A, Subpart III, Section 44701, General requirements. Under that section, Congress charges the FAA with promoting safe flight of civil aircraft in air commerce by prescribing regulations for practices, methods, and procedures the Administrator finds necessary for safety in air commerce. This regulation is within the scope of that authority because it addresses an unsafe condition that is likely to exist or develop on products identified in this rulemaking action.

Regulatory Findings

The FAA has determined that this AD will not have federalism implications under Executive Order 13132. This AD will not have a substantial direct effect on the States, on the relationship between the national government and the States, or on the distribution of power and responsibilities among the various levels of government.

For the reasons discussed above, I certify that this AD:

(1) Is not a ''significant regulatory action'' under Executive Order 12866,

(2) Will not affect intrastate aviation in Alaska, and

(3) Will not have a significant economic impact, positive or negative, on a substantial number of small entities under the criteria of the Regulatory Flexibility Act.

List of Subjects in 14 CFR Part 39

Air transportation, Aircraft, Aviation safety, Incorporation by reference, Safety.

The Amendment

Accordingly, under the authority delegated to me by the Administrator, the FAA amends 14 CFR part 39 as follows:

PART 39—AIRWORTHINESS DIRECTIVES

■ 1. The authority citation for part 39 continues to read as follows:

Authority: 49 U.S.C. 106(g), 40113, 44701.

§ 39.13 [Amended]

■ 2. The FAA amends § 39.13 by:

■ a. Removing airworthiness directive 2013–26–01, Amendment 39–17710 (78 FR 79295, December 30, 2013); and

■ b. Adding the following new airworthiness directive:

2022–02–03 CFM International, S.A.: Amendment 39–21900; Docket No. FAA–2021–0259; Project Identifier AD–2020–01128–E.

(a) Effective Date

This airworthiness directive (AD) is effective March 22, 2022.

(b) Affected ADs

This AD replaces AD 2013–26–01, Amendment 39–17710 (78 FR 79295, December 30, 2013).

(c) Applicability

This AD applies to CFM International, S.A. CFM56–3 and CFM56–7B model turbofan engines equipped with an accessory gearbox (AGB) assembly with the following part numbers (P/Ns):

(1) For CFM56–3, CFM56–3B, and CFM56–3C model turbofan engines, AGB P/N: 335–300–103–0, 335–300–105–0, 335–300–106–0, 335–300–107–0, 335–300–108–0, 335–300–109–0, or 335–300–110–0, installed.

(2) For CFM56–7B20, CFM56–7B20/2, CFM56–7B20/3, CFM56–7B22, CFM56–7B22/2, CFM56–7B22/3, CFM56–7B22/3B1, CFM56–7B22/B1, CFM56–7B24, CFM56–7B24/2, CFM56–7B24/3, CFM56–7B24/3B1, CFM56–7B24/B1, CFM56–7B26, CFM56–7B26/2, CFM56–7B26/3, CFM56–7B26/3B1, CFM56–7B26/3B2, CFM56–7B26/3B2F, CFM56–7B26/3F, CFM56–7B26/B1, CFM56–7B26/B2, CFM56–7B27, CFM56–7B27/2, CFM56–7B27/3, CFM56–7B27/3B1, CFM56–7B27/3B1F, CFM56–7B27/3B3, CFM56–7B27/3F, CFM56–7B27/B1, and CFM56–7B27/B3 model turbofan engines, AGB P/N: 340–046–503–0, 340–046–504–0, or 340–046–505–0, installed.

(3) For CFM56–7B27A, CFM56–7B27A/3, or CFM56–7B27AE model turbofan engines, AGB P/N: 340–188–601–0, 340–188–603–0, or 340–188–605–0, installed.

(d) Subject

Joint Aircraft System Component (JASC) Code 7260, Turbine Engine Accessory Drive.

(e) Unsafe Condition

This AD was prompted by a dual engine loss of oil event and 42 prior events of total loss of engine oil during flight. The FAA is issuing this AD to prevent loss of engine oil while in flight. The unsafe condition, if not addressed, could result in engine failure, loss of thrust control, reduced control of the aircraft, and damage to the airplane.

(f) Compliance

Comply with this AD within the compliance times specified, unless already done.

(g) Required Actions

(1) After the effective date of this AD, after any maintenance that involves removal and re-installation of the AGB handcranking pad cover, perform an independent inspection to verify re-installation of the AGB handcranking pad cover; or

(2) Prior to the next removal of the AGB handcranking pad cover from the engine, insert the independent inspection required by paragraph (g)(1) of this AD as a required inspection item in the existing approved continuous airworthiness maintenance program for the aircraft.

(h) Mandatory Terminating Action

As a mandatory terminating action to the requirements of paragraph (g) of this AD:

(1) For affected CFM56–3, CFM56–3B, and CFM56–3C model turbofan engines, at the next engine shop visit, or before December 31, 2026, whichever occurs first after the effective date of this AD, replace the affected AGB with a part eligible for installation.

(2) For affected CFM56–7B model turbofan engines, except for CFM56–7B27A, CFM56–

7B27A/3 and CFM56–7B27AE model turbofan engines, at the next engine shop visit, or before December 31, 2024, whichever occurs first after the effective date of this AD, replace the affected AGB with a part eligible for installation.

(i) Definition

(1) For the purpose of this AD, an ''engine shop visit'' is the induction of an engine into the shop for maintenance involving the separation of pairs of major mating engine case flanges, except for the following situations, which do not constitute an engine shop visit:

(i) Separation of engine flanges solely for the purposes of transportation of the engine without subsequent maintenance; or

(ii) Separation of engine flanges solely for the purpose of replacing the fan or propulsor without subsequent maintenance.

(2) For the purpose of this AD, for affected CFM56–3, CFM56–3B, and CFM56–3C model turbofan engines, a part eligible for installation is:

(i) An AGB with a P/N other than 340–046–503–0, 340–046–504–0, or 340–046–505–0; or

(ii) An AGB that, using an FAA-approved procedure, has been re-worked with a dynamic oil seal in the handcranking pad cover assembly and re-identified with a new P/N not listed in paragraph (i)(2)(i) of this AD.

Note 1 to paragraph (i)(2)(ii): Procedures to install a dynamic oil seal in the handcranking pad cover assembly can be found in CFM International SB CFM56–3 S/B 72–1129, Revision 7, dated May 6, 2020.

(3) For the purpose of this AD, for affected CFM56–7B model turbofan engines, except for CFM56–7B27A, CFM56–7B27A/3 and CFM56–7B27AE model turbofan engines, a part eligible for installation is:

(i) An AGB with a P/N other than 340–046–503–0, 340–046–504–0, or 340–046–505–0; or

(ii) An affected AGB that, using an FAA-approved procedure, has been re-worked with a dynamic oil seal in the handcranking pad cover assembly and re-identified with a new P/N not listed in paragraph (i)(3)(i) of this AD.

Note 2 to paragraph (i)(3)(ii): Procedures to install a dynamic oil seal in the handcranking pad cover assembly can be found in CFM International SB CFM56–7B S/B 72–0879, Revision 7, dated February 10, 2021, CFM56–7B S/B 72–0564, Revision 9, dated December 3, 2021, or CFM56–7B S/B 72–1071, initial issue, dated December 3, 2021.

(j) Alternative Methods of Compliance (AMOCs)

(1) The Manager, ECO Branch, FAA, has the authority to approve AMOCs for this AD, if requested using the procedures found in 14 CFR 39.19. In accordance with 14 CFR 39.19, send your request to your principal inspector or local Flight Standards District Office, as appropriate. If sending information directly to the manager of the certification office, send it to the attention of the person identified in paragraph (k) of this AD. You may email your request to: *ANE-AD-AMOC@faa.gov.*

(2) Before using any approved AMOC, notify your appropriate principal inspector, or lacking a principal inspector, the manager of the local flight standards district office/certificate holding district office.

(k) Related Information

For more information about this AD, contact Kevin Clark, Aviation Safety Engineer, ECO Branch, FAA, 1200 District Avenue, Burlington, MA 01803; phone: (781) 238–7088; fax: (781) 238–7199; email: *kevin.m.clark@faa.gov.*

(l) Material Incorporated by Reference

None.

Issued on January 6, 2022.

Lance T. Gant,

Director, Compliance & Airworthiness Division, Aircraft Certification Service.

[FR Doc. 2022–03039 Filed 2–14–22; 8:45 am]

BILLING CODE 4910–13–P

DEPARTMENT OF TRANSPORTATION

Federal Aviation Administration

14 CFR Part 39

[Docket No. FAA–2021–1018; Project Identifier MCAI–2021–00902–R; Amendment 39–21934; AD 2022–03–17]

RIN 2120–AA64

Airworthiness Directives; Airbus Helicopters

AGENCY: Federal Aviation Administration (FAA), DOT.

ACTION: Final rule.

SUMMARY: The FAA is adopting a new airworthiness directive (AD) for all Airbus Helicopters Model AS332L2 and EC225LP helicopters. This AD was prompted by a report of loss of tightening torque on the nut that attaches the tail gear box (TGB) bevel wheel. This AD requires repetitive inspections (measurements) of the angular clearances of the TGB, and, depending on the findings, replacement of the TGB with a serviceable TGB, as specified in a European Union Aviation Safety Agency (EASA) AD, which is incorporated by reference. This AD also provides terminating action for certain repetitive inspections. The FAA is issuing this AD to address the unsafe condition on these products.

DATES: This AD is effective March 22, 2022.

The Director of the Federal Register approved the incorporation by reference of a certain publication listed in this AD as of March 22, 2022.

ADDRESSES: For EASA material incorporated by reference (IBR) in this final rule, contact EASA, Konrad-Adenauer-Ufer 3, 50668 Cologne, Germany; telephone +49 221 8999 000; email *ADs@easa.europa.eu;* internet *www.easa.europa.eu.* You may find the EASA material on the EASA website at *https://ad.easa.europa.eu.* You may view this material at the FAA, Office of the Regional Counsel, Southwest Region, 10101 Hillwood Pkwy., Room 6N–321, Fort Worth, TX 76177. For information on the availability of this material at the FAA, call (817) 222–5110. It is also available in the AD docket at *https://www.regulations.gov* by searching for and locating Docket No. FAA–2021–1018.

Examining the AD Docket

You may examine the AD docket at *https://www.regulations.gov* by searching for and locating Docket No. FAA–2021–1018; or in person at Docket Operations between 9 a.m. and 5 p.m., Monday through Friday, except Federal holidays. The AD docket contains this final rule, the EASA AD, any comments received, and other information. The address for Docket Operations is U.S. Department of Transportation, Docket Operations, M–30, West Building, Ground Floor, Room W12–140, 1200 New Jersey Avenue SE, Washington, DC 20590.

FOR FURTHER INFORMATION CONTACT: Andrea Jimenez, Aerospace Engineer, COS Program Management Section, Operational Safety Branch, Compliance & Airworthiness Division, FAA, 1600 Stewart Ave., Suite 410, Westbury, NY 11590; telephone (516) 228–7330; email *andrea.jimenez@faa.gov.*

SUPPLEMENTARY INFORMATION:

Background

EASA, which is the Technical Agent for the Member States of the European Union, has issued EASA AD 2021–0184R1, dated October 8, 2021 (EASA AD 2021–0184R1), to correct an unsafe condition for Airbus Helicopters, formerly Eurocopter, Eurocopter France, Aerospatiale, Model AS 332 L2 and EC 225 LP helicopters, all serial numbers.

The FAA issued a notice of proposed rulemaking (NPRM) to amend 14 CFR part 39 by adding an AD that would apply to all Airbus Helicopters Model AS332L2 and EC225LP helicopters. The NPRM published in the **Federal Register** on December 1, 2021 (86 FR 68166). The NPRM was prompted by a report of loss of tightening torque on the nut that attaches the TGB bevel wheel. Additionally, the subsequent investigation highlighted that loss of the tightening torque might lead to degradation of the splines between the tail rotor shaft and the TGB bevel wheel. The investigation is still on-going to

identify the root cause of the tightening torque loss. The NPRM proposed to require repetitive inspections (measurements) of the angular clearances of the TGB, and, depending on the findings, replacement of the TGB with a serviceable TGB, as specified in EASA AD 2021–0184R1.

After the FAA issued the NPRM, EASA issued EASA AD 2021–0184R2, dated January 12, 2022 (EASA AD 2021–0184R2), which revises EASA AD 2021–0184R1 to correct the allowable angular clearance range. EASA specifies that the angular clearance range specified in EASA AD 2021–0184R1 was defined stricter than the one defined in the service information. Therefore, EASA issued EASA AD 2021–0184R2 to correct the allowable clearance range accordingly.

The FAA is issuing this AD to address loss of tightening torque on the nut that attaches the TGB bevel wheel, which, if not corrected, could lead to structural failure of the TGB drive, resulting in reduced, or loss of, control of the helicopter. See EASA AD 2021–0184R2 for additional background information.

Discussion of Final Airworthiness Directive

Comments

The FAA received no comments on the NPRM or on the determination of the costs.

Conclusion

These helicopters have been approved by EASA and are approved for operation in the United States. Pursuant to the FAA's bilateral agreement with the European Union, EASA has notified the FAA about the unsafe condition described in its AD. The FAA reviewed the relevant data and determined that air safety requires adopting this AD as proposed. Accordingly, the FAA is issuing this AD to address the unsafe condition on these helicopters. Except for minor editorial changes and updating EASA AD 2021–0184R2 as the material incorporated by reference, this AD is adopted as proposed in the NPRM. None of these changes will increase the economic burden on any operator.

Related Service Information Under 1 CFR Part 51

EASA AD 2021–0184R2 requires repetitive inspections (measurements) of the angular clearances of the TGB, and, depending on the findings, additional repetitive inspections (measurements) of the angular clearances of the TGB at a reduced interval and replacement of the TGB with a serviceable TGB. EASA AD 2021–0184R2 provides terminating action for the repetitive inspections at the reduced interval for a helicopter if, during two consecutive inspections, the value of the measured angular clearance remains unchanged for that helicopter.

This material is reasonably available because the interested parties have access to it through their normal course of business or by the means identified in the **ADDRESSES** section.

Interim Action

The FAA considers this AD to be an interim action. If final action is later identified, the FAA might consider further rulemaking then.

Differences Between This AD and the EASA AD

EASA AD 2021–0184R2 requires compliance in terms of flight hours, this AD requires using hours time-in-service. Where EASA AD 2021–0184R2 refers to August 19, 2021 (the effective date of EASA AD 2021–0184, dated August 5, 2021), this AD requires using the effective date of this AD. Where the service information referenced in EASA AD 2021–0184R2 specifies sending parts to the manufacturer or an approved repair station to be examined, this AD does not include that requirement.

Costs of Compliance

The FAA estimates that this AD affects 38 helicopters of U.S. Registry. Labor rates are estimated at $85 per work-hour. Based on these numbers, the FAA estimates the following costs to comply with this AD.

ESTIMATED COSTS FOR REQUIRED ACTIONS

Action	Labor cost	Parts cost	Cost per product	Cost on U.S. operators
Inspection of TGB Clearance.	2 work-hours × $85 per hour = $170 per inspection cycle.	$0	$170 per inspection cycle	$6,460 per inspection cycle.

The FAA estimates the following costs to do any necessary on-condition actions that are required based on the results of any required actions. The FAA has no way of determining the number of helicopters that might need this on-condition action:

ESTIMATED COSTS OF ON-CONDITION ACTIONS

Action	Labor cost	Parts cost	Cost per product
Replacement of TGB	33 work-hours × $85 per hour = $2,805	Up to $410,000	Up to $412,805.

Authority for This Rulemaking

Title 49 of the United States Code specifies the FAA's authority to issue rules on aviation safety. Subtitle I, section 106, describes the authority of the FAA Administrator. Subtitle VII: Aviation Programs, describes in more detail the scope of the Agency's authority.

The FAA is issuing this rulemaking under the authority described in Subtitle VII, Part A, Subpart III, Section 44701: General requirements. Under that section, Congress charges the FAA with promoting safe flight of civil aircraft in air commerce by prescribing regulations for practices, methods, and procedures the Administrator finds necessary for safety in air commerce. This regulation is within the scope of that authority because it addresses an unsafe condition that is likely to exist or develop on products identified in this rulemaking action.

Regulatory Findings

This AD will not have federalism implications under Executive Order 13132. This AD will not have a substantial direct effect on the States, on the relationship between the national government and the States, or on the distribution of power and

responsibilities among the various levels of government.

For the reasons discussed above, I certify that this AD:

(1) Is not a ''significant regulatory action'' under Executive Order 12866,

(2) Will not affect intrastate aviation in Alaska, and

(3) Will not have a significant economic impact, positive or negative, on a substantial number of small entities under the criteria of the Regulatory Flexibility Act.

List of Subjects in 14 CFR Part 39

Air transportation, Aircraft, Aviation safety, Incorporation by reference, Safety.

The Amendment

Accordingly, under the authority delegated to me by the Administrator, the FAA amends 14 CFR part 39 as follows:

PART 39—AIRWORTHINESS DIRECTIVES

■ 1. The authority citation for part 39 continues to read as follows:

Authority: 49 U.S.C. 106(g), 40113, 44701.

§ 39.13 [Amended]

■ 2. The FAA amends § 39.13 by adding the following new airworthiness directive:

2022–03–17 Airbus Helicopters: Amendment 39–21934; Docket No. FAA–2021–1018; Project Identifier MCAI–2021–00902–R.

(a) Effective Date

This airworthiness directive (AD) is effective March 22, 2022.

(b) Affected ADs

None.

(c) Applicability

This AD applies to all Airbus Helicopters Model AS332L2 and EC225LP helicopters, certificated in any category.

(d) Subject

Joint Aircraft Service Component (JASC) Code: 6400, Tail Rotor System.

(e) Unsafe Condition

This AD was prompted by a report of loss of tightening torque on the nut that attaches the tail gear box (TGB) bevel wheel. The FAA is issuing this AD to address loss of tightening torque on the nut that attaches the TGB bevel wheel, which, if not corrected, could lead to structural failure of the TGB drive, resulting in reduced, or loss of, control of the helicopter.

(f) Compliance

Comply with this AD within the compliance times specified, unless already done.

(g) Requirements

Except as specified in paragraph (h) of this AD: Comply with all required actions and compliance times specified in, and in accordance with, European Union Aviation Safety Agency (EASA) AD 2021–0184R2, dated January 12, 2022 (EASA AD 2021–0184R2).

(h) Exceptions to EASA AD 2021–0184R2

(1) Where EASA AD 2021–0184R2 requires compliance in terms of flight hours, this AD requires using hours time-in-service.

(2) Where EASA AD 2021–0184R2 refers to August 19, 2021 (the effective date of EASA AD 2021–0184, dated August 5, 2021), this AD requires using the effective date of this AD.

(3) Where the service information referenced in EASA AD 2021–0184R2 specifies sending parts to the manufacturer or an approved repair station to be examined, this AD does not include that requirement.

(4) This AD does not mandate compliance with the ''Remarks'' section of EASA AD 2021–0184R2.

(i) No Reporting Requirement

Although the service information referenced in EASA AD 2021–0184R2 specifies to submit certain information to the manufacturer, this AD does not include that requirement.

(j) Special Flight Permit

Special flight permits may be permitted provided that there are no passengers on board.

(k) Alternative Methods of Compliance (AMOCs)

(1) The Manager, International Validation Branch, FAA, has the authority to approve AMOCs for this AD, if requested using the procedures found in 14 CFR 39.19. In accordance with 14 CFR 39.19, send your request to your principal inspector or local Flight Standards District Office, as appropriate. If sending information directly to the manager of the International Validation Branch, send it to the attention of the person identified in paragraph (l) of this AD. Information may be emailed to: *9-AVS-AIR-730-AMOC@faa.gov.*

(2) Before using any approved AMOC, notify your appropriate principal inspector, or lacking a principal inspector, the manager of the local flight standards district office/certificate holding district office.

(l) Related Information

For more information about this AD, contact Andrea Jimenez, Aerospace Engineer, COS Program Management Section, Operational Safety Branch, Compliance & Airworthiness Division, FAA, 1600 Stewart Ave., Suite 410, Westbury, NY 11590; telephone (516) 228–7330; email *andrea.jimenez@faa.gov.*

(m) Material Incorporated by Reference

(1) The Director of the Federal Register approved the incorporation by reference of the service information listed in this paragraph under 5 U.S.C. 552(a) and 1 CFR part 51.

(2) You must use this service information as applicable to do the actions required by this AD, unless this AD specifies otherwise.

(i) European Union Aviation Safety Agency (EASA) AD 2021–0184R2, dated January 12, 2022.

(ii) [Reserved]

(3) For EASA AD 2021–0184R2, contact EASA, Konrad-Adenauer-Ufer 3, 50668 Cologne, Germany; telephone +49 221 8999 000; email *ADs@easa.europa.eu;* internet *www.easa.europa.eu.* You may find the EASA material on the EASA website at *https://ad.easa.europa.eu.*

(4) You may view this service information at the FAA, Office of the Regional Counsel, Southwest Region, 10101 Hillwood Pkwy., Room 6N–321, Fort Worth, TX 76177. For information on the availability of this material at the FAA, call (817) 222–5110. This material may be found in the AD docket at *https://www.regulations.gov* by searching for and locating Docket No. FAA–2021–1018.

(5) You may view this material that is incorporated by reference at the National Archives and Records Administration (NARA). For information on the availability of this material at NARA, email *fr.inspection@nara.gov,* or go to: *https://www.archives.gov/federal-register/cfr/ibr-locations.html.*

Issued on January 26, 2022.

Lance T. Gant,

Director, Compliance & Airworthiness Division, Aircraft Certification Service.

[FR Doc. 2022–03137 Filed 2–14–22; 8:45 am]

BILLING CODE 4910–13–P

DEPARTMENT OF TRANSPORTATION

Federal Aviation Administration

14 CFR Part 71

[Docket No. FAA–2021–0917; Airspace Docket No. 21–ANM–45]

RIN 2120–AA66

Modification of Class E Airspace; Kit Carson County Airport, Burlington, CO

AGENCY: Federal Aviation Administration (FAA), DOT.

ACTION: Final rule.

SUMMARY: This action modifies the Class E airspace extending upward from 700 feet above the surface of the Earth, and removes the Class E airspace extending upward from 1,200 feet above the surface of the Earth at Kit Carson County Airport, Burlington, CO. This action ensures the safety and management of instrument flight rules (IFR) operations at the airport.

DATES: Effective 0901 UTC, May 19, 2022. The Director of the Federal Register approves this incorporation by reference action under 1 CFR part 51, subject to the annual revision of FAA Order 7400.11 and publication of conforming amendments.

ADDRESSES: FAA Order JO 7400.11F, Airspace Designations and Reporting Points, and subsequent amendments can be viewed online at *https://www.faa.gov/air_traffic/publications/.* For further information, you can contact the Airspace Policy Group, Federal Aviation Administration, 800 Independence Avenue SW, Washington, DC 20591; telephone: (202) 267–8783. FAA Order JO 7400.11F is also available for inspection at the National Archives and Records Administration (NARA). For information on the availability of FAA Order JO 7400.11F at NARA, email *fr.inspection@nara.gov* or go to *https://www.archives.gov/federal-register/cfr/ibr-locations.html.*

FOR FURTHER INFORMATION CONTACT: Nathan A. Chaffman, Federal Aviation Administration, Western Service Center, Operations Support Group, 2200 S. 216th Street, Des Moines, WA 98198; telephone (206) 231–3460.

SUPPLEMENTARY INFORMATION:

Authority for This Rulemaking

The FAA's authority to issue rules regarding aviation safety is found in Title 49 of the United States Code. Subtitle I, Section 106 describes the authority of the FAA Administrator. Subtitle VII, Aviation Programs, describes in more detail the scope of the agency's authority. This rulemaking is promulgated under the authority described in Subtitle VII, Part A, Subpart I, Section 40103. Under that section, the FAA is charged with prescribing regulations to assign the use of airspace necessary to ensure the safety of aircraft and the efficient use of airspace. This regulation is within the scope of that authority, as it would amend Class E airspace extending upward from 700 feet above ground level, and remove Class E airspace extending upward from 1,200 feet above ground level to support IFR operations at Kit Carson County Airport, Burlington, CO.

History

The FAA published a notice of proposed rulemaking (NPRM) in the **Federal Register** (86 FR 60423; November 2, 2021) for Docket No. FAA–2021–0917 to modify Class E airspace at Kit Carson County Airport, Burlington, CO. Interested parties were invited to participate in this rulemaking effort by submitting written comments on the proposal to the FAA. No comments were received.

Subsequent to publication of the NPRM, the FAA discovered that it had inadvertently left out the proposed removal of the Class E airspace extending upward from 1,200 feet above the surface of the earth from the Class E airspace legal description. The FAA is removing this airspace area from the Class E legal description because the area is contained within the Denver Class E6 domestic en route airspace area, and duplication is not necessary.

Class E5 and Class E6 airspace designations are published in paragraphs 6005 and 6006, respectively, of FAA Order JO 7400.11F, dated August 10, 2021, and effective September 15, 2021, which is incorporated by reference in 14 CFR 71.1. The Class E airspace designations listed in this document will be published subsequently in FAA Order JO 7400.11.

Availability and Summary of Documents for Incorporation by Reference

This document amends FAA Order JO 7400.11F, Airspace Designations and Reporting Points, dated August 10, 2021, and effective September 15, 2021. FAA Order JO 7400.11F is publicly available as listed in the **ADDRESSES** section of this document. FAA Order JO 7400.11F lists Class A, B, C, D, and E airspace areas, air traffic service routes, and reporting points.

The Rule

The FAA is amending 14 CFR part 71 by modifying Class E airspace extending upward from 700 feet above the surface of the Earth at Kit Carson County Airport, Burlington, CO.

This airspace is designed to contain departing IFR aircraft until reaching 1,200 feet above the surface and arriving IFR aircraft descending below 1,500 feet above the surface. To properly contain IFR operations at the airport, the radius of the airspace is increased from a ''6.5-mile'' radius to a ''7-mile'' radius from the 207° bearing from the airport clockwise to the 268° bearing from the airport. Additionally, extensions to the south, northwest, and north of the airport are established to contain IFR departures to 1,200 feet above the surface and IFR arrivals descending below 1,500 feet above the surface. The southern extension is established within 2.6 miles on each side of the 160° bearing from the airport, extending from the 6.5-mile radius to 8.5 miles south of the airport. The northwest extension is established within 2.6 miles on each side of the 326° bearing from the airport, extending from the 6.5-mile radius to 7.5 miles northwest of the airport. The northern extension is established within 1.0 mile on each side of the 340° bearing from the airport, extending from the 6.5-mile radius to 10.8 miles north of the airport. Additionally, the Class E airspace extending upward from 1,200 feet above the surface of the earth, excluding the airspace within the State of Kansas, is removed. The area is contained within the Denver Class E6 domestic en route airspace area, and duplication is not necessary. Finally, this action updates the Class E legal description, lines two and three. The second line of the text header is updated from ''Burlington, Kit Carson County Airport, CO'' to ''Kit Carson County Airport'', to match the FAA database. Additionally, the third line of the text header is updated from ''(Lat. 39°14′41″ N, long. 102°17′05″ W) to ''(Lat. 39°14′33″ N, long. 102°17′07″ W)'' to match the FAA database.

Class E5 and Class E6 airspace designations are published in paragraphs 6005 and 6006, respectively, of FAA Order JO 7400.11F, dated August 10, 2021, and effective September 15, 2021, which is incorporated by reference in 14 CFR 71.1. The Class E airspace designations listed in this document will be published subsequently in FAA Order JO 7400.11.

FAA Order JO 7400.11, Airspace Designations and Reporting Points, is published yearly and effective on September 15.

Regulatory Notices and Analyses

The FAA has determined that this regulation only involves an established body of technical regulations for which frequent and routine amendments are necessary to keep them operationally current, is non-controversial, and unlikely to result in adverse or negative comments. It, therefore: (1) Is not a ''significant regulatory action'' under Executive Order 12866; (2) is not a ''significant rule'' under DOT Regulatory Policies and Procedures (44 FR 11034; February 26, 1979); and (3) does not warrant preparation of a regulatory evaluation as the anticipated impact is so minimal. Since this is a routine matter that will only affect air traffic procedures and air navigation, it is certified that this rule, when promulgated, would not have a significant economic impact on a substantial number of small entities under the criteria of the Regulatory Flexibility Act.

Environmental Review

The FAA has determined that this action qualifies for categorical exclusion under the National Environmental Policy Act in accordance with FAA Order 1050.1F, ''Environmental Impacts: Policies and Procedures,'' paragraph 5–6.5a. This airspace action

is not expected to cause any potentially significant environmental impacts, and no extraordinary circumstances exist that warrant the preparation of an environmental assessment.

List of Subjects in 14 CFR Part 71

Airspace, Incorporation by reference, Navigation (air).

Adoption of the Amendment

In consideration of the foregoing, the Federal Aviation Administration amends 14 CFR part 71 as follows:

PART 71—DESIGNATION OF CLASS A, B, C, D, AND E AIRSPACE AREAS; AIR TRAFFIC SERVICE ROUTES; AND REPORTING POINTS

■ 1. The authority citation for 14 CFR part 71 continues to read as follows:

Authority: 49 U.S.C. 106(f), 106(g), 40103, 40113, 40120; E.O. 10854, 24 FR 9565, 3 CFR, 1959–1963 Comp., p. 389.

§ 71.1 [Amended]

■ 2. The incorporation by reference in 14 CFR 71.1 of FAA Order JO 7400.11F, Airspace Designations and Reporting Points, dated August 10, 2021, and effective September 15, 2021, is amended as follows:

Paragraph 6005 Class E Airspace Areas Extending Upward From 700 Feet or More Above the Surface of the Earth.

* * * * *

ANM CO E5 Burlington, CO [Amended]

Kit Carson County Airport, CO

(Lat. 39°14′33″ N, long. 102°17′07″ W)

That airspace extending upward from 700 feet above the surface within 6.5-mile radius of the Kit Carson County Airport, and within a 7.0-mile radius of the airport from the 207° bearing from the airport clockwise to the 283° bearing from the airport, and within 2.6 miles on each side of the 160° bearing from the airport, extending from the 6.5-mile radius to 8.5 miles south of the airport, and within 2.6 miles on each side of the 326° bearing from the airport, extending from the 6.5-mile radius to 7.5 miles northwest of the airport, and within 1.0 mile on each side of the 340° bearing from the airport, extending from the 6.5-mile radius to 10.8 miles north of the airport.

Issued in Des Moines, Washington, on February 8, 2022.

B.G. Chew,

Acting Group Manager, Operations Support Group, Western Service Center.

[FR Doc. 2022–03203 Filed 2–14–22; 8:45 am]

BILLING CODE 4910–13–P

DEPARTMENT OF TRANSPORTATION

Federal Aviation Administration

14 CFR Part 71

[Docket No. FAA–2021–0479; Airspace Docket No. 21–AGL–5]

RIN 2120–AA66

Amendment of VOR Federal Airways V–170, V–175 and V–250; Establishment of Area Navigation (RNAV) Route T–400; in the Vicinity of Worthington, MN.

AGENCY: Federal Aviation Administration (FAA), DOT.

ACTION: Final rule; delay of effective date.

SUMMARY: This action changes the effective date of a final rule published in the **Federal Register** on January 14, 2022, amending VHF Omnidirectional Range (VOR) Federal airways V–170, V–175, and V–250, and establishing area navigation (RNAV) route T–400, due to the planned decommissioning of the VOR portion of the Worthington, MN, VOR/Distance Measuring Equipment (VOR/DME) navigational aid. The FAA is delaying the effective date to facilitate continued use of the current Air Traffic Procedures, while allowing sufficient time for redesign of the proposed procedures, in order to meet to required current procedure criteria.

DATES: The effective date of the final rule published on January 14, 2022 (87 FR 2322) is delayed until September 8, 2022. The Director of the Federal Register approved this incorporation by reference action under Title 1 Code of Federal Regulations part 51, subject to the annual revision of FAA Order 7400.11 and publication of conforming amendments.

FOR FURTHER INFORMATION CONTACT: Jesse Acevedo, Rules and Regulations Group, Office of Policy, Federal Aviation Administration, 800 Independence Avenue SW, Washington, DC 20591; telephone: (202) 267–8783.

SUPPLEMENTARY INFORMATION:

Background

The FAA published a final rule in the **Federal Register** for Docket No. FAA–2021–0479 (87 FR 2322, January 14, 2022), amending VOR Federal airways V–170, V–175, and V–250, and establishing RNAV route T–400, due to the planned decommissioning of the VOR portion of the Worthington, MN, VOR/DME. The effective date for that final rule is March 24, 2022. Subsequent to publication of the final rule, the Flight Standards Procedure Review Board (PRB) denied a waiver request to use a higher climb gradient than specified in current criteria for a portion of the Air Traffic Procedures that were revised in support of this action. The FAA is delaying the effective date to September 8, 2022 to facilitate continued use of the current Air Traffic Service procedures, while allowing sufficient time for the redesign of the proposed procedures, in order to meet the required current procedural criteria.

To facilitate the safe and continuous use of existing air traffic procedures while the ATS route procedures are redesigned, the planned decommissioning date for the Worthington, MN, VOR has been postponed to September 8, 2022. The rule amending V–170, V–175, and V–250, and establishing area navigation T–400 is delayed to coincide with that date.

VOR Federal airways and RNAV T-routes are published in paragraphs 6010(a) and 6011, respectively, of FAA Order JO 7400.11F, dated August 20, 2021, and effective September 15, 2021, which are incorporated by reference in 14 CFR 71.1. The ATS routes listed in this document will be published subsequently in FAA Order JO 7400.11.

FAA Order 7400.11, Airspace Designations and Reporting Points, is published yearly and effective on September 15.

Good Cause for No Notice and Comment

Section 553(b)(3)(B) of Title 5, United States Code, (the Administrative Procedure Act) authorizes agencies to dispense with notice and comment procedures for rules when the agency for ''good cause'' finds that those procedures are ''impracticable, unnecessary, or contrary to the public interest.'' Under this section, an agency, upon finding good cause, may issue a final rule without seeking comment prior to the rulemaking. The FAA finds that prior notice and public comment to this final rule is unnecessary due to the brief length of the extension of the effective date and the fact that there is no substantive change to the rule.''

Delay of Effective Date

Accordingly, pursuant to the authority delegated to me, the effective date of the final rule, Airspace Docket 21–AGL–5, as published in the **Federal Register** on January 14, 2022 (87 FR 2322), FR Doc. 2022–00457, is hereby delayed until September 8, 2022.

Authority: 49 U.S.C. 106(f), 106(g); 40103, 40113, 40120; E.O. 10854, 24 FR 9565, 3 CFR, 1959–1963 Comp., P. 389.

Issued in Washington, DC, on February 9, 2022.

Michael R. Beckles,

Manager, Rules and Regulations Group.

[FR Doc. 2022–03129 Filed 2–14–22; 8:45 am]

BILLING CODE 4910–13–P

DEPARTMENT OF ENERGY

Federal Energy Regulatory Commission

18 CFR Part 12

[Docket No. RM20–9–000; Order No. 880]

Safety of Water Power Projects and Project Works

AGENCY: Federal Energy Regulatory Commission, Department of Energy.

ACTION: Final rule; correction.

SUMMARY: The Federal Energy Regulatory Commission (Commission) is correcting a final rule that appeared in the **Federal Register** on January 11, 2022. The final rule revised the Commission's regulations governing the safety of hydroelectric projects licensed by the Commission under the Federal Power Act.

DATES: The rule is effective April 11, 2022.

FOR FURTHER INFORMATION CONTACT: Tara DiJohn (Legal Information), Office of the General Counsel, Federal Energy Regulatory Commission, 888 First Street NE, Washington, DC 20426, (202) 502–8671, *tara.dijohn@ferc.gov.*

SUPPLEMENTARY INFORMATION: In FR Doc. 2021–27736 appearing on pages 1490–1520, in the **Federal Register** of Tuesday, January 11, 2022, the following corrections are made:

§ 12.3 [Corrected]

■ 1. On page 1513, in the second column, in amendatory instruction 2.b. for § 12.3, the instruction ''Redesignating paragraph (b)(4)(xiii) as (b)(4)(xix);'' is corrected to read ''Redesignating paragraph (b)(4)(xiii) as paragraph (b)(4)(xiv);''.

■ 2. On page 1514, in the second column, in amendatory instruction 4 for § 12.10, paragraph (a)(1) and the first sentence of paragraph (a)(2) are corrected to read as follows:

§ 12.10 [Corrected]

(a) * * * (1) *Initial reports.* An applicant or licensee must report by email or telephone to the Regional Engineer any condition affecting the safety of a project or projects works, as defined in § 12.3(b)(4). The initial report must be made as soon as practicable after that condition is discovered, preferably within 72 hours, without unduly interfering with any necessary or appropriate emergency repair, alarm, or other emergency action procedure.

(2) * * * Following the initial report required in paragraph (a)(1) of this section, the applicant or licensee must submit to the Regional Engineer a written report on the condition affecting the safety of the project or project works verified in accordance with § 12.13. * * *

* * * * *

§§ 12.40 through 12.44 [Redesignated as §§ 12.50 through 12.54] [Corrected].

■ 3. On page 1519, in the second column, remove amendatory instruction 10.

■ 4. On page 1515, in the first column, redesignate amendatory instruction 9, revising subpart D to part 12, as amendatory instruction 10.

■ 5. On page 1515, in the first column, add a new amendatory instruction 9 to read as follows:

§§ 12.40 through 12.44 [Redesignated as §§ 12.50 through 12.54]

■ 9. Redesignate §§ 12.40 through 12.44 as §§ 12.50 through 12.54, respectively.

§ 12.31 [Corrected]

■ 6. Starting on page 1515, in the second column, § 12.31 is corrected as follows:

■ i. On page 1515, in the second column, in paragraph (d), the term ''Gross storage capacity'' is corrected to read ''*Gross storage capacity*''.

■ ii. On page 1515, in the third column, in paragraph (e), the term ''Periodic inspection'' is corrected to read ''*Periodic inspection*''.

■ iii. On page 1515, in the third column, in paragraph (f), the term ''Comprehensive assessment'' is corrected to read ''*Comprehensive assessment*''.

■ iv. On page 1515, in the third column, in paragraph (g), the term ''Previous Part 12D Inspection'' is corrected to read ''*Previous Part 12D Inspection*''.

■ v. On page 1515, in the third column, in paragraph (h), the term ''Previous Part 12D Report'' is corrected to read ''*Previous Part 12D Report*''.

Dated: February 8, 2022.

Debbie-Anne A. Reese,

Deputy Secretary.

[FR Doc. 2022–03072 Filed 2–14–22; 8:45 am]

BILLING CODE 6717–01–P

DEPARTMENT OF TRANSPORTATION

Federal Highway Administration

23 CFR Part 1

RIN 2125–AG04

Diversion of Highway Revenues; Removal of Obsolete Regulation

AGENCY: Federal Highway Administration (FHWA), U.S. Department of Transportation (DOT).

ACTION: Final rule.

SUMMARY: Through this final rule, FHWA will remove a regulation from the CFR that has been rendered obsolete by the passage of subsequent legislation. The FHWA believes that because the underlying statutory authority for this regulation has substantially changed since adopted, this final rule eliminates any confusion that may be caused by its existence in the CFR.

DATES: This final rule is effective February 15, 2022.

FOR FURTHER INFORMATION CONTACT: Steven Frankel, Office of Budget (HCFB–10), (202) 366–9649, or via email at *Steven.Frankel@dot.gov* or Adam Sleeter, Office of the Chief Counsel, (202) 366–8839, or via email at *Adam.Sleeter@dot.gov.* Office hours are from 8 a.m. to 4:30 p.m., e.t., Monday through Friday, except Federal holidays.

SUPPLEMENTARY INFORMATION:

Electronic Access and Filing

This document may be viewed online under the docket number noted above through the Federal eRulemaking portal at: *www.regulations.gov.* An electronic copy of this document may also be downloaded from the Office of the Federal Register's website at: *www.federalregister.gov* and the Government Publishing Office's website at: *www.GovInfo.gov.*

Background

The regulation at 23 CFR 1.28 is obsolete. It relates to the implementation of a provision of law that was repealed in 1998. Prior to 1998, 23 U.S.C. 126 contained a provision that required the reduction of Federal-aid Highway Program apportionments (funds distributed by statutory formula) to a State if the State diverted State vehicle-related fees and taxes for uses other than construction, improvement, and maintenance of highways. This provision of law was repealed by Section 1226(d) of Public Law (Pub. L.) 105–178 (''Transportation Equity Act for the 21st Century'' or TEA–21), as added by Public Law 105–206, title IX, sec.

9003(a), July 22, 1998, 112 Stat. 837 (''TEA–21 Restoration Act''). Since the enactment of the TEA–21 authorization in 1998, 23 U.S.C. 126 (or a predecessor transfer provision) [1] has governed the ability of States to transfer their apportioned funds among programs.

All substantive requirements and provisions of 23 CFR 1.28 have been superseded by subsequent law. Therefore, the regulation at 23 CFR 1.28 is obsolete and may be removed without adversely impacting the ability of FHWA or the State or local transportation departments to carry out the Federal-aid highway program.

Rulemaking Analyses and Notices

Under the Administrative Procedure Act (APA) (5 U.S.C. 553(b)), an agency may waive the prior notice and opportunity for public comment requirements if it finds, for good cause, that the requirements are impracticable, unnecessary, or contrary to the public interest. The issuance of this rule without prior notice and opportunity for public comment is based on the good cause exception in 5 U.S.C. 553(b)(3)(B). Seeking public comment is unnecessary. This action is merely a ministerial action to remove a regulation from the CFR that has been rendered obsolete by the passage of subsequent legislation, and the removal of this regulation will have no substantive impact. The FHWA believes that, because the underlying statutory authority for this regulation has substantially changed since adopted, this final rule eliminates any confusion that may be caused by its existence in the CFR. For these reasons, FHWA does not anticipate receiving meaningful comments on a proposal to remove the regulation from the CFR and finds good cause to forgo notice and an opportunity for public comment.

The APA also allows agencies, upon finding of good cause, to make a rule effective immediately upon publication (5 U.S.C. 553(d)(3)). For the same reasons discussed above, the Agency believes good cause exists for making this action effective immediately upon publication.

Executive Order 12866 (Regulatory Planning and Review), Executive Order 13563 (Improving Regulation and Regulatory Review), and DOT Regulatory Policies and Procedures

The FHWA has determined that this action does not constitute a significant regulatory action within the meaning of Executive Order (E.O.) 12866 or within the meaning of DOT regulatory policies and procedures. This is a ministerial action to remove an obsolete regulation from the CFR. The removal of this regulation will have no substantive impact or economic impact; therefore, a full regulatory evaluation is not necessary.

Regulatory Flexibility Act

In compliance with the Regulatory Flexibility Act (Pub. L. 96–354; 5 U.S.C. 60l–612), FHWA has evaluated the effects of this final rule on small entities, such as local governments and businesses. This is a ministerial action to remove an obsolete regulation from the CFR. Administration of Federal-aid highway construction projects by small entities will not be affected by the deletion. Therefore, FHWA certifies that the action will not have a significant economic impact on a substantial number of small entities.

Unfunded Mandates Reform Act of 1995

The FHWA has determined that this rule does not impose unfunded mandates as defined by the Unfunded Mandates Reform Act of 1995 (Pub. L. 104–4, March 22, 1995, 109 Stat. 48). The actions in this final rule will not result in the expenditure by State, local, and Tribal governments, in the aggregate, or by the private sector, of $155 million or more in any 1 year (2 U.S.C. 1532) for either State, local, and Tribal governments in the aggregate, or by the private sector. In addition, the definition of ''Federal Mandate'' in the Unfunded Mandates Reform Act excludes financial assistance of the type in which State, local, or Tribal governments have authority to adjust their participation in the program in accordance with changes made in the program by the Federal Government. The Federal-aid highway program permits this type of flexibility.

Executive Order 13132 (Federalism Assessment)

The FHWA has analyzed this final rule in accordance with the principles and criteria contained in E.O. 13132. Since is a ministerial action to remove an obsolete regulation from the CFR, FHWA has determined that this rule does not have federalism implications. The FHWA has also determined that this action does not preempt any State law or State regulation or affect the States' ability to discharge traditional State governmental functions.

Executive Order 12372 (Intergovernmental Review)

The regulations implementing E.O. 12372 regarding intergovernmental consultation on Federal programs and activities do not apply to this program. State and local governments are not directly affected by this action because it is a ministerial action to remove an obsolete regulation from the CFR.

Paperwork Reduction Act

Under the Paperwork Reduction Act of 1995 (PRA) (44 U.S.C. 3501, *et seq.*), Federal agencies must obtain approval from the Office of Management and Budget for each collection of information they conduct, sponsor, or require through regulations. The FHWA has determined that this final rule does not contain collection of information requirements for the purposes of the PRA.

National Environmental Policy Act

The FHWA has analyzed this final rule for the purposes of the National Environmental Policy Act (NEPA) (42 U.S.C. 4321, *et seq.*) and has determined that this action does not have any effect on the quality of the human and natural environment because it is a ministerial action to remove an obsolete regulation from the CFR.

Executive Order 13175 (Tribal Consultation)

The FHWA has analyzed this final rule under E.O. 13175 and believes that it will not have substantial direct effects on one or more Indian Tribes, does not impose substantial direct compliance costs on Indian Tribal governments, and does not preempt Tribal law. This rule does not impose any direct compliance requirements on Indian Tribal governments nor does it have any economic or other impacts on the viability of Indian Tribes. Therefore, a Tribal summary impact statement is not required.

Executive Order 12898 (Environmental Justice)

E.O. 12898 requires that each Federal Agency make achieving environmental justice part of its mission by identifying and addressing, as appropriate, disproportionately high and adverse human health or environmental effects of its programs, policies, and activities on minorities and low-income populations. FHWA has determined that this rule does not raise any environmental justice issues.

Regulation Identifier Number

A Regulation Identifier Number (RIN) is assigned to each regulatory action

[1] In 1998, section 1310(a) of TEA–21 located the transfer authority in 23 U.S.C. 110(a). In 1999, section 102(a) of the Motor Carrier Safety Improvement Act of 1999 (Pub. L. 106–159, Dec. 9, 1999, 113 Stat. 1752) redesignated that provision and moved the transfer authority to 23 U.S.C. 126.

listed in the Unified Agenda of Federal Regulations. The Regulatory Information Service Center publishes the Unified Agenda in April and October of each year. The RIN number contained in the heading of this document can be used to cross-reference this action with the Unified Agenda.

List of Subjects in 23 CFR Part 1

Grant programs—transportation, Highways and roads.

Stephanie Pollack,

Deputy Administrator, Federal Highway Administration.

PART 1— [REMOVED AND RESERVED]

■ In consideration of the foregoing, and under the authority of 23 U.S.C. 315, 23 CFR 1.28, FHWA removes and reserves 23 CFR part 1.

[FR Doc. 2022–03173 Filed 2–14–22; 8:45 am]

BILLING CODE 4910–22–P

DEPARTMENT OF HOMELAND SECURITY

Coast Guard

33 CFR Part 100

[Docket No. USCG–2021–0914]

Special Local Regulation; Marine Events Within the Eleventh Coast Guard District—Mark Hahn Memorial 300 Mile PWC Endurance Race

AGENCY: Coast Guard, DHS.

ACTION: Notification of enforcement of regulation.

SUMMARY: The Coast Guard will enforce the Mark Hahn Memorial 300 Mile Personal Watercraft (PWC) Endurance Race special local regulation on the waters of Lake Havasu, Arizona from February 26 through February 27, 2022. This special local regulation is necessary to provide for the safety of the participants, crew, sponsor vessels, and general users of the waterway. During the enforcement period, persons and vessels are prohibited from entering into, transiting through, or anchoring within this regulated area unless authorized by the Captain of the Port, or his designated representative.

DATES: The regulations in 33 CFR 100.1102 will be enforced from 7 a.m. until 6 p.m., each day from February 26, 2022 through February 27, 2022 for the location described in Item No. 14 in Table 1 to § 100.1102.

FOR FURTHER INFORMATION CONTACT: If you have questions about this notification of enforcement, call or email Lieutenant Commander John Santorum, Waterways Management, U.S. Coast Guard Sector San Diego, CA; telephone 619–278–7656, email *MarineEventsSD@uscg.mil.*

SUPPLEMENTARY INFORMATION: The Coast Guard will enforce the special local regulations in 33 CFR 100.1102 for the Mark Hahn Memorial 300 Mile PWC Endurance Race on Lake Havasu, AZ for the location described in Table 1 to § 100.1102, Item No. 14 of that section, from 7 a.m. to 6 p.m. on February 26, 2022 through February 27, 2022. This action is being taken to provide for the safety of life on the navigable waterway during the race. Our regulation for recurring marine events on the Colorado River, between Davis Dam (Bullhead City, Arizona) and Headgate Dam (Parker, Arizona), § 100.1102, Table 1 to § 100.1102, Item No. 14, specifies the location of the regulated area for the Mark Hahn Memorial 300 PWC Endurance Race, which encompasses portions of Lake Havasu. Under the provisions of § 100.1102, persons and vessels are prohibited from entering into, transiting through, or anchoring within this regulated area unless authorized by the Captain of the Port, or his designated representative. The Coast Guard may be assisted by other Federal, State, or local law enforcement agencies in enforcing this regulation.

In addition to this document in the **Federal Register**, the Coast Guard will provide the maritime community with advance notification of this enforcement period via the Local Notice to Mariners and local advertising by the event sponsor.

If the Captain of the Port Sector San Diego or his designated representative determines that the regulated area need not be enforced for the full duration stated on this document, he or she may use a Broadcast Notice to Mariners or other communications coordinated with the event sponsor to grant general permission to enter the regulated area.

Dated: February 9, 2022.

T.J. Barelli,

Captain, U.S. Coast Guard, Captain of the Port San Diego.

[FR Doc. 2022–03155 Filed 2–14–22; 8:45 am]

BILLING CODE 9110–04–P

DEPARTMENT OF HOMELAND SECURITY

Coast Guard

33 CFR Part 165

[Docket Number USCG–2022–0112]

RIN 1625–AA00

Safety Zone; Potomac River, Between Charles County, MD and King George County, VA

AGENCY: Coast Guard, DHS.

ACTION: Temporary final rule.

SUMMARY: The Coast Guard is establishing a temporary safety zone for certain waters of the Potomac River. This action is necessary to provide for the safety of persons, and the marine environment from the potential safety hazards associated with construction operations at the new Governor Harry W. Nice/Senator Thomas ''Mac'' Middleton Memorial (US–301) Bridge, which will occur from 8 p.m. on February 11, 2022, through 8 p.m. on February 17, 2022. This rule will prohibit persons and vessels from being in the safety zone unless authorized by the Captain of the Port, Maryland-National Capital Region or a designated representative.

DATES: This rule is effective without actual notice from February 15, 2022, through 8 p.m. on February 17, 2022. For the purposes of enforcement, actual notice will be issued from 8 p.m. on February 11, 2022, until February 15, 2022.

ADDRESSES: To view documents mentioned in this preamble as being available in the docket, go to *https://www.regulations.gov,* type USCG–2022–0112 in the search box and click ''Search.'' Next, in the Document Type column, select ''Supporting & Related Material.''

FOR FURTHER INFORMATION CONTACT: If you have questions on this rule, call or email LCDR Samuel Danus, Sector Maryland-NCR, Waterways Management Division, U.S. Coast Guard: Telephone 410–576–2519, email *Samuel.M.Danus@uscg.mil.*

SUPPLEMENTARY INFORMATION:

I. Table of Abbreviations

CFR Code of Federal Regulations
COTP Captain of the Port
DHS Department of Homeland Security
FR Federal Register
§ Section
TFR Temporary Final Rule
U.S.C. United States Code

II. Background Information and Regulatory History

On February 10, 2022, Skanska-Corman-McLean, Joint Venture notified the Coast Guard that the company will be setting structural steel sections across the federal navigation channel at the new Governor Harry W. Nice/Senator Thomas ''Mac'' Middleton Memorial (US–301) Bridge. The bridge contractor stated the work required to set structural steel across the channel, which was originally scheduled to occur in November 2021, then rescheduled to December 2021, then rescheduled to January 3–15, 2022, and again rescheduled to January 11–22, 2022, then rescheduled from January 22, 2022 through February 4, 2022 and again rescheduled to February 4–11, 2022. The work was partially completed during February 4–11, 2022, however the contractor underestimated the time needed to perform the work. The work is now scheduled to continue beyond February 11, 2022.

The work described by the contractor requires the movement in and anchoring at multiple points of a large crane barge within the federal navigation channel. This crane can accommodate all of the steel to be hoisted and placed, which will streamline the operation by avoiding multiple reloads of steel and reducing the time in the channel by multiple days. This operation will impede vessels requiring the use of the channel. Note, the Coast Guard previously issued other temporary safety zones at this location for placement of fender ring elements in association with construction of the new bridge (Search dockets USCG–2021–0127; USCG–2021–0650; USCG–2021–0745; USCG–2021–0906; USCG–2022–0021; USCG–2022–0031 and USCG–2022–0072).

The Coast Guard is issuing this temporary rule without prior notice and opportunity to comment pursuant to authority under section 4(a) of the Administrative Procedure Act (APA) (5 U.S.C. 553(b)). This provision authorizes an agency to issue a rule without prior notice and opportunity to comment when the agency for good cause finds that those procedures are ''impracticable, unnecessary, or contrary to the public interest.'' Under 5 U.S.C. 553(b)(B), the Coast Guard finds that good cause exists for not publishing a notice of proposed rulemaking (NPRM) with respect to this rule because doing so would be impracticable and contrary to the public interest. Construction operations involving large crane heavy lifts at the new Governor Harry W. Nice/Senator Thomas ''Mac'' Middleton Memorial (US–301) Bridge must occur within the federal navigation channel. Immediate action is needed to respond to the potential safety hazards associated with bridge construction. Hazards from the construction operations include low-hanging or falling ropes, cables, large piles and cement cast portions, dangerous projectiles, and or other debris. We must establish this safety zone by February 11, 2022 to guard against these hazards.

Under 5 U.S.C. 553(d)(3), the Coast Guard finds that good cause exists for making this rule effective less than 30 days after publication in the **Federal Register**. Delaying the effective date of this rule would be impracticable and contrary to the public interest because immediate action is needed to respond to the potential safety hazards associated with construction operations at the new Governor Harry W. Nice/Senator Thomas ''Mac'' Middleton Memorial (US–301) Bridge to be conducted within the federal navigation channel.

III. Legal Authority and Need for Rule

The Coast Guard is issuing this rule under authority in 46 U.S.C. 70034 (previously 33 U.S.C. 1231). The COTP has determined that potential hazards associated with bridge construction starting February 11, 2022 will be a safety concern for anyone within the federal navigation channel at the new Governor Harry W. Nice/Senator Thomas ''Mac'' Middleton Memorial (US–301) Bridge construction site. This rule is needed to protect personnel, vessels, and the marine environment in the navigable waters within the safety zone while the bridge is being constructed.

IV. Discussion of the Rule

This rule establishes a temporary safety zone from 8 p.m. on February 11, 2022 through 8 p.m. on February 17, 2022. The safety zone will cover all navigable waters of the Potomac River encompassed by a line connecting the following points beginning at 38°21′50.96″ N, 076°59′22.04″ W, thence south to 38°21′43.08″ N, 076°59′20.55″ W, thence west to 38°21′41.00″ N, 076°59′34.90″ W, thence north to 38°21′48.90″ N, 076°59′36.80″ W, and east back to the beginning point located between Charles County, MD and King George County, VA.

The duration of the zone is intended to protect personnel and the marine environment in these navigable waters while structural steel is being set across the federal navigation channel at the new Governor Harry W. Nice/Senator Thomas ''Mac'' Middleton Memorial (US–301) Bridge.

Except for marine equipment and vessels operated by Skanska-Corman-McLean, Joint Venture, or its subcontractors, no vessel or person will be permitted to enter the safety zone without obtaining permission from the COTP Maryland-National Capital Region or a designated representative.

The COTP Maryland-National Capital Region will notify the public that the safety zone will be enforced by all appropriate means to the affected segments of the public, as practicable, in accordance with 33 CFR 165.7(a).

V. Regulatory Analyses

We developed this rule after considering numerous statutes and Executive orders related to rulemaking. Below we summarize our analyses based on a number of these statutes and Executive orders, and we discuss First Amendment rights of protestors.

A. Regulatory Planning and Review

Executive Orders 12866 and 13563 direct agencies to assess the costs and benefits of available regulatory alternatives and, if regulation is necessary, to select regulatory approaches that maximize net benefits. This rule has not been designated a ''significant regulatory action'' under Executive Order 12866. Accordingly, this rule has not been reviewed by the Office of Management and Budget (OMB).

This regulatory action determination is based on size and duration of the safety zone. The temporary safety zone is approximately 450 yards in width and 270 yards in length. We anticipate that there will be no vessels that are unable to conduct business. Excursion vessels and commercial fishing vessels are not impacted by this rulemaking. Excursion vessels do not operate in this area, and commercial fishing vessels are not impacted because of their draft. Some towing vessels may be impacted, but bridge project personnel have been conducting outreach throughout the project in order to coordinate with those vessels. Vessel traffic not required to use the navigation channel will be able to safely transit around the safety zone. Such vessels may be able to transit to the east or the west of the federal navigation channel, as similar vertical clearance and water depth exist under the next bridge span to the east and west. This safety zone will impact a small designated area of the Potomac River for 6 days, but coincides with the non-peak season for recreational boating.

B. Impact on Small Entities

The Regulatory Flexibility Act of 1980, 5 U.S.C. 601–612, as amended, requires Federal agencies to consider the potential impact of regulations on small entities during rulemaking. The term ''small entities'' comprises small businesses, not-for-profit organizations that are independently owned and operated and are not dominant in their fields, and governmental jurisdictions with populations of less than 50,000. The Coast Guard received no comments from the Small Business Administration on this rulemaking. The Coast Guard certifies under 5 U.S.C. 605(b) that this rule will not have a significant economic impact on a substantial number of small entities.

While some owners or operators of vessels intending to transit the temporary safety zone may be small entities, for the reasons stated in section V.A above, this rule will not have a significant economic impact on any vessel owner or operator.

Under section 213(a) of the Small Business Regulatory Enforcement Fairness Act of 1996 (Pub. L. 104–121), we want to assist small entities in understanding this rule. If the rule would affect your small business, organization, or governmental jurisdiction and you have questions concerning its provisions or options for compliance, please call or email the person listed in the **FOR FURTHER INFORMATION CONTACT** section.

Small businesses may send comments on the actions of Federal employees who enforce, or otherwise determine compliance with, Federal regulations to the Small Business and Agriculture Regulatory Enforcement Ombudsman and the Regional Small Business Regulatory Fairness Boards. The Ombudsman evaluates these actions annually and rates each agency's responsiveness to small business. If you wish to comment on actions by employees of the Coast Guard, call 1–888–REG–FAIR (1–888–734–3247). The Coast Guard will not retaliate against small entities that question or complain about this rule or any policy or action of the Coast Guard.

C. Collection of Information

This rule will not call for a new collection of information under the Paperwork Reduction Act of 1995 (44 U.S.C. 3501–3520).

D. Federalism and Indian Tribal Governments

A rule has implications for federalism under Executive Order 13132, Federalism, if it has a substantial direct effect on the States, on the relationship between the National Government and the States, or on the distribution of power and responsibilities among the various levels of government. We have analyzed this rule under that Order and have determined that it is consistent with the fundamental federalism principles and preemption requirements described in Executive Order 13132.

Also, this rule does not have tribal implications under Executive Order 13175, Consultation and Coordination with Indian Tribal Governments, because it does not have a substantial direct effect on one or more Indian tribes, on the relationship between the Federal Government and Indian tribes, or on the distribution of power and responsibilities between the Federal Government and Indian tribes.

E. Unfunded Mandates Reform Act

The Unfunded Mandates Reform Act of 1995 (2 U.S.C. 1531–1538) requires Federal agencies to assess the effects of their discretionary regulatory actions. In particular, the Act addresses actions that may result in the expenditure by a State, local, or tribal government, in the aggregate, or by the private sector of $100,000,000 (adjusted for inflation) or more in any one year. Though this rule will not result in such an expenditure, we do discuss the effects of this rule elsewhere in this preamble.

F. Environment

We have analyzed this rule under Department of Homeland Security Directive 023–01, Rev. 1, associated implementing instructions, and Environmental Planning COMDTINST 5090.1 (series), which guide the Coast Guard in complying with the National Environmental Policy Act of 1969 (42 U.S.C. 4321–4370f), and have determined that this action is one of a category of actions that do not individually or cumulatively have a significant effect on the human environment. This rule involves a temporary safety zone lasting 6 total days that will prohibit entry within a portion of the Potomac River. It is categorically excluded from further review under paragraph L60(c) of Appendix A, Table 1 of DHS Instruction Manual 023–01–001–01, Rev. 1. For instructions on locating the docket, see the **ADDRESSES** section of this preamble.

G. Protest Activities

The Coast Guard respects the First Amendment rights of protesters. Protesters are asked to call or email the person listed in the **FOR FURTHER INFORMATION CONTACT** section to coordinate protest activities so that your message can be received without jeopardizing the safety or security of people, places or vessels.

List of Subjects in 33 CFR Part 165

Harbors, Marine safety, Navigation (water), Reporting and recordkeeping requirements, Security measures, Waterways.

For the reasons discussed in the preamble, the Coast Guard amends 33 CFR part 165 as follows:

PART 165—REGULATED NAVIGATION AREAS AND LIMITED ACCESS AREAS

■ 1. The authority citation for part 165 continues to read as follows:

Authority: 46 U.S.C. 70034, 70051; 33 CFR 1.05–1, 6.04–1, 6.04–6, and 160.5; Department of Homeland Security Delegation No. 00170.1, Revision No. 01.2.

■ 2. Add § 165.T05–0112 to read as follows:

§ 165.T05–0112 Safety Zone; Potomac River, Between Charles County, MD and King George County, VA.

(a) *Location.* The following area is a safety zone: All navigable waters of the Potomac River, encompassed by a line connecting the following points beginning at 38°21′50.96″ N, 076°59′22.04″ W, thence south to 38°21′43.08″ N, 076°59′20.55″ W, thence west to 38°21′41.00″ N, 076°59′34.90″ W, thence north to 38°21′48.90″ N, 076°59′36.80″ W, and east back to the beginning point, located between Charles County, MD and King George County, VA. These coordinates are based on datum NAD 83.

(b) *Definitions.* As used in this section—

Captain of the Port (COTP) means the Commander, U.S. Coast Guard Sector Maryland-National Capital Region.

Designated representative means any Coast Guard commissioned, warrant, or petty officer, including a Coast Guard coxswain, petty officer, or other officer operating a Coast Guard vessel and a Federal, State, and local officer designated by or assisting the Captain of the Port Maryland-National Capital Region (COTP) in the enforcement of the safety zone.

Marine equipment means any vessel, barge or other equipment operated by Skanska-Corman-McLean, Joint Venture, or its subcontractors.

(c) *Regulations.* (1) Under the general safety zone regulations in subpart C of this part, except for marine equipment, you may not enter the safety zone described in paragraph (a) of this section unless authorized by the COTP or the COTP's designated representative.

(2) To seek permission to enter, contact the COTP or the COTP's representative by telephone number 410–576–2693 or on Marine Band Radio VHF–FM channel 16 (156.8 MHz). Those in the safety zone must comply with all lawful orders or directions given to them by the COTP or the COTP's designated representative.

(d) *Enforcement officials.* The U.S. Coast Guard may be assisted in the patrol and enforcement of the safety zone by Federal, State, and local agencies.

(e) *Enforcement period.* The section will be enforced from 8 p.m. on February 11, 2022, through 8 p.m. on February 17, 2022.

Dated: February 11, 2022.

James R. Bendle,

Commander, U.S. Coast Guard, Acting Captain of the Port Sector Maryland-National Capital Region.

[FR Doc. 2022–03339 Filed 2–14–22; 8:45 am]

BILLING CODE 9110–04–P

DEPARTMENT OF HOMELAND SECURITY

Coast Guard

33 CFR Part 165

[Docket Number USCG–2021–0647]

RIN 1625–AA00

Safety Zone; CBWTP Outfall Diffuser Improvements, Columbia River, Portland, OR

AGENCY: Coast Guard, Department of Homeland Security (DHS).

ACTION: Temporary final rule; extension of effective period.

SUMMARY: The Coast Guard is amending a temporary final rule currently establishing a temporary safety zone for certain waters of the Columbia River. This temporary rule extends the duration of the temporary safety zone an additional 15 days. This action is necessary to provide for the safety of life on these navigable waters near Portland, OR, at Columbia River Mile 105.6 during construction through the newly anticipated end date of March 15, 2022. This regulation prohibits persons and vessels from being in the safety zone unless authorized by the Captain of the Port Sector Columbia River or a designated representative.

DATES: The effective period of 33 CFR 165.T13–0647, published at 86 FR 54622 (October 4, 2021), which was set to expire at 11:59 p.m. on February 28, 2022, is now extended through 11:59 p.m. on March 15, 2022. The amendment in this rule is effective February 15, 2022.

ADDRESSES: To view documents mentioned in this preamble as being available in the docket, go to *https://www.regulations.gov,* type USCG–2021–0647 in the search box and click ''Search.'' Next, in the Document Type column, select ''Supporting & Related Material.''

FOR FURTHER INFORMATION CONTACT: If you have questions on this rule, call or email LCDR Sean Morrison, Waterways Management Division, Marine Safety Unit Portland, U.S. Coast Guard; telephone 503–240–9319, email *D13-SMB-MSUPortlandWWM@uscg.mil.*

SUPPLEMENTARY INFORMATION:

I. Table of Abbreviations

CFR Code of Federal Regulations
DHS Department of Homeland Security
FR Federal Register
NPRM Notice of proposed rulemaking
§ Section
U.S.C. United States Code

II. Background Information and Regulatory History

As the final document in a notice-and-comment rulemaking, on October 4, 2021, the Coast Guard published a temporary final rule (TFR) entitled ''Safety Zone; BWTP Outfall Diffuser Improvements, Columbia River, Portland, OR'' (86 FR 54622) that established a temporary safety zone regulation, 33 CFR 165.T13–0647, and made it effective from from November 1, 2021, through 11:59 p.m. on February 28, 2022. This new TFR is extending the effective period of that regulation to 11:59 p.m. on March 15, 2022.

Under 5 U.S.C. 553(b)(B), the Coast Guard finds that good cause exists for not publishing a notice of proposed rulemaking with respect to this rule because it would be impracticable and contrary to the public interest. The Coast Guard was unable to publish an NPRM and hold a reasonable comment period for this rulemaking due to the notification of unpredictable weather related complications and the construction extension request being made on January 6, 2022. Delaying the effective date of this rule would be impracticable and contrary to the public interest because immediate action is needed to respond to the potential safety hazards associated with the CBWTP Outfall Diffuser Improvements Project before the safety zone is lifted.

III. Legal Authority and Need for Rule

The Coast Guard is issuing this rule under authority in 46 U.S.C. 70034 (previously 33 U.S.C. 1231). The Captain of the Port Columbia River (COTP) has determined that potential hazards associated with the construction project will be a safety concern for anyone within the designated area of the CBWTP Outfall Diffuser Improvements. The purpose of this rule is to ensure safety of vessels and the navigable waters in the safety zone during the scheduled construction period.

IV. Discussion of Comments, Changes, and the Rule

We received no comments on our notice of proposed rulemaking published August 22, 2021 (86 FR 47044), for the TFR currently in place. The only change in the regulatory text of this rule is extending the effective period until March 15, 2022.

The currently established temporary safety zone is effective from 12:01 a.m. on November 1, 2021, through 11:59 p.m. on February 28, 2022. This rule extends the duration of the temporary safety zone through 11:59 p.m. on March 15, 2022. The safety zone will continue to cover all navigable waters of the Columbia River, surface to bottom, approximately 300 yards to the east and west side of the Burlington Northern Railroad Bridge on the Oregon side of the Columbia River from the shoreline to the outside of the main navigational channel; specifically beginning at the shoreline at 45°37′ 26.2′ N, 122°41′ 46.91′ W, northeast to 45°37′ 33.206′ N, 122°41′ 37.699′ W, southeast to 45°37′ 23.4′ N, 122°41′ 18.1′ W, thence southwest to 45°37′ 16.27′ N, 122°41′ 30.75′ W, and along the shoreline back to the beginning point. The duration of the zone is intended to ensure the safety of vessels and these navigable waters while the construction project is underway. The duration of the zone is intended to ensure the safety of vessels and these navigable waters during the construction period. No vessel or person will be permitted to enter the safety zone without obtaining permission from the COTP or a designated representative.

V. Regulatory Analyses

We developed this rule after considering numerous statutes and Executive orders related to rulemaking. Below we summarize our analyses based on a number of these statutes and Executive orders, and we discuss First Amendment rights of protestors.

A. Regulatory Planning and Review

Executive Orders 12866 and 13563 direct agencies to assess the costs and benefits of available regulatory alternatives and, if regulation is necessary, to select regulatory

approaches that maximize net benefits. This rule has not been designated a ''significant regulatory action,'' under Executive Order 12866. Accordingly, this rule has not been reviewed by the Office of Management and Budget (OMB).

This regulatory action determination is based on the size, location, duration, and time-of-year of the safety zone. Vessel traffic will be able to safely transit around this safety zone which will impact a small designated area of the Columbia River during the construction project. Moreover, the Coast Guard will issue a Notice to Mariners about the zone, and the rule will allow vessels to seek permission to enter the zone.

B. Impact on Small Entities

The Regulatory Flexibility Act of 1980, 5 U.S.C. 601–612, as amended, requires Federal agencies to consider the potential impact of regulations on small entities during rulemaking. The term ''small entities'' comprises small businesses, not-for-profit organizations that are independently owned and operated and are not dominant in their fields, and governmental jurisdictions with populations of less than 50,000. The Coast Guard received no comments from the Small Business Administration on this rulemaking. The Coast Guard certifies under 5 U.S.C. 605(b) that this rule will not have a significant economic impact on a substantial number of small entities. While some owners or operators of vessels intending to transit the safety zone may be small entities, for the reasons stated in section V.A above, this rule will not have a significant economic impact on any vessel owner or operator.

Under section 213(a) of the Small Business Regulatory Enforcement Fairness Act of 1996 (Pub. L. 104–121), we want to assist small entities in understanding this rule. If the rule would affect your small business, organization, or governmental jurisdiction and you have questions concerning its provisions or options for compliance, please call or email the person listed in the **FOR FURTHER INFORMATION CONTACT** section.

Small businesses may send comments on the actions of Federal employees who enforce, or otherwise determine compliance with, Federal regulations to the Small Business and Agriculture Regulatory Enforcement Ombudsman and the Regional Small Business Regulatory Fairness Boards. The Ombudsman evaluates these actions annually and rates each agency's responsiveness to small business. If you wish to comment on actions by employees of the Coast Guard, call 1–888–REG–FAIR (1–888–734–3247). The Coast Guard will not retaliate against small entities that question or complain about this rule or any policy or action of the Coast Guard.

C. Collection of Information

This rule will not call for a new collection of information under the Paperwork Reduction Act of 1995 (44 U.S.C. 3501–3520).

D. Federalism and Indian Tribal Governments

A rule has implications for federalism under Executive Order 13132, Federalism, if it has a substantial direct effect on the States, on the relationship between the National Government and the States, or on the distribution of power and responsibilities among the various levels of government. We have analyzed this rule under that order and have determined that it is consistent with the fundamental federalism principles and preemption requirements described in Executive Order 13132.

Also, this rule does not have tribal implications under Executive Order 13175, Consultation and Coordination with Indian Tribal Governments, because it does not have a substantial direct effect on one or more Indian tribes, on the relationship between the Federal Government and Indian tribes, or on the distribution of power and responsibilities between the Federal Government and Indian tribes.

E. Unfunded Mandates Reform Act

The Unfunded Mandates Reform Act of 1995 (2 U.S.C. 1531–1538) requires Federal agencies to assess the effects of their discretionary regulatory actions. In particular, the Act addresses actions that may result in the expenditure by a State, local, or tribal government, in the aggregate, or by the private sector of $100,000,000 (adjusted for inflation) or more in any one year. Though this rule will not result in such an expenditure, we do discuss the effects of this rule elsewhere in this preamble.

F. Environment

We have analyzed this rule under Department of Homeland Security Directive 023–01, Rev. 1, associated implementing instructions, and Environmental Planning COMDTINST 5090.1 (series), which guide the Coast Guard in complying with the National Environmental Policy Act of 1969 (42 U.S.C. 4321–4370f), and have determined that this action is one of a category of actions that do not individually or cumulatively have a significant effect on the human environment. This rule involves extending a temporary safety zone by 15 days that will prohibit vessel traffic to transit the area during construction operations. It is categorically excluded from further review under paragraph L60(a) of Appendix A, Table 1 of DHS Instruction Manual 023–01–001–01, Rev. 1. A Record of Environmental Consideration supporting this determination is available in the docket. For instructions on locating the docket, see the **ADDRESSES** section of this preamble.

G. Protest Activities

The Coast Guard respects the First Amendment rights of protesters. Protesters are asked to call or email the person listed in the **FOR FURTHER INFORMATION CONTACT** section to coordinate protest activities so that your message can be received without jeopardizing the safety or security of people, places or vessels.

List of Subjects in 33 CFR Part 165

Harbors, Marine safety, Navigation (water), Reporting and recordkeeping requirements, Security measures, Waterways.

For the reasons discussed in the preamble, the Coast Guard amends 33 CFR part 165 as follows:

PART 165—REGULATED NAVIGATION AREAS AND LIMITED ACCESS AREAS

■ 1. The authority citation for part 165 continues to read as follows:

Authority: 46 U.S.C. 70034, 70051; 33 CFR 1.05–1, 6.04–1, 6.04–6, and 160.5; Department of Homeland Security Delegation No. 00170.1, Revision No. 01.2.

■ 2. Revise § 165.T13–0647(d) to read as follows:

§ 165.T13–0647 Safety Zones: Safety Zone; CBWTP Outfall Diffuser Improvements, Columbia River, Portland, OR.

* * * * *

(d) *Enforcement period.* This safety zone is in effect from 12:01 a.m. on November 1, 2021, through 11:59 p.m. on March 15, 2022. It will be subject to enforcement this entire period unless the Captain of the Port Columbia River determines it is no longer needed, in which case the Coast Guard will inform mariners via Notice to Mariners.

Dated: February 3, 2022.

G.M. Bailey,

Captain, U.S. Coast Guard, Acting Captain of the Port, Columbia River.

[FR Doc. 2022–03207 Filed 2–14–22; 8:45 am]

BILLING CODE 9110–04–P

ENVIRONMENTAL PROTECTION AGENCY

40 CFR Part 52

[EPA–R09–OAR–2020–0352; FRL–9463–01–R9]

Approval of Arizona State Implementation Plan Revisions; Maricopa County Air Quality Department; Stationary Source Permits; New Source Review

AGENCY: Environmental Protection Agency (EPA).

ACTION: Final rule.

SUMMARY: The Environmental Protection Agency (EPA) is taking final action to approve revisions to the Maricopa County Air Quality Department's (MCAQD or Department) portion of the state implementation plan (SIP) for the State of Arizona. We are finalizing full approval of six MCAQD rules for the Department's New Source Review (NSR) preconstruction permitting program for new and modified stationary sources of air pollution under the Clean Air Act (CAA or the Act). The revisions update the MCAQD's NSR permitting program for new and modified sources of air pollution.

DATES: This rule is effective on March 17, 2022.

ADDRESSES: The EPA has established a docket for this action under Docket ID No. EPA–R09–OAR–2020–0352. All documents in the docket are listed on the *https://www.regulations.gov* website. Although listed in the index, some information is not publicly available, *e.g.,* Confidential Business Information (CBI) or other information whose disclosure is restricted by statute. Certain other material, such as copyrighted material, is not placed on the internet and will be publicly available only in hard copy form. Publicly available docket materials are available through *https://www.regulations.gov,* or please contact the person identified in the **FOR FURTHER INFORMATION CONTACT** section for additional availability information. If you need assistance in a language other than English or if you are a person with disabilities who needs a reasonable accommodation at no cost to you, please contact the person identified in the **FOR FURTHER INFORMATION CONTACT** section.

FOR FURTHER INFORMATION CONTACT: Shaheerah Kelly, EPA Region IX, 75 Hawthorne Street (AIR–3–1), San Francisco, California 94105. By phone at (415) 947–4156, or by email at *kelly.shaheerah@epa.gov.*

SUPPLEMENTARY INFORMATION: Throughout this document, ''we'', ''us'', and ''our'' refer to the EPA.

Table of Contents

I. Proposed Action
II. Public Comments and EPA Responses
A. Exemption for Agricultural Equipment used in Normal Farm Operations in Rule 200
B. Public Hearing Requirements for Minor NSR Requirements in Rule 241
C. Public Notification Requirements for General Permits in Rule 230
III. Additional Developments After Notice of Proposed Rulemaking
IV. EPA Action
V. Incorporation by Reference
VI. Statutory and Executive Order Reviews

Definitions

For the purpose of this document, we are giving meaning to certain words or initials as follows:

(i) The initials *ADEQ* mean or refer to the Arizona Department of Environmental Quality.

(ii) The initials *BACT* mean or refer to Best Available Control Technology.

(iii) The word or initials *CAA* or *Act* mean or refer to the Clean Air Act.

(iv) The initials *CFR* mean or refer to Code of Federal Regulations.

(v) The initials or words *EPA, we, us* or *our* mean or refer to the United States Environmental Protection Agency.

(vi) The initials *FIP* mean or refer to Federal Implementation Plan.

(vii) The initials *FR* mean or refer to **Federal Register**.

(viii) The word or initials *MCAQD, County, Maricopa County,* or *Department* mean or refer to the Maricopa County Air Quality Department, the agency with jurisdiction over stationary sources within Maricopa County, Arizona.

(ix) The phrase *minor NSR* means the permit program applicable to new or modified sources that do not result in a new major source or a major modification.

(x) The initials *NAAQS* mean or refer to the National Ambient Air Quality Standards.

(xi) The initials *NSR* mean or refer to New Source Review, which includes NNSR, PSD and minor NSR.

(xii) The initials *NNSR* mean or refer to nonattainment New Source Review.

(xiii) The initials $PM_{2.5}$ mean or refer to particulate matter less than 2.5 micrometers.

(xiv) The initials PM_{10} mean or refer to particulate matter less than 10 micrometers.

(xv) The initials *PSD* mean or refer to Prevention of Significant Deterioration.

(xvi) The initials *SIP* mean or refer to State Implementation Plan.

(xvii) The word *State* means or refers to the State of Arizona.

(xviii) The initials *TSD* mean or refer to the Technical Support Document.

I. Proposed Action

On February 23, 2021, the EPA proposed to approve the rules listed in Table 1 for incorporation into the Arizona SIP. *See* 86 FR 10903. Although MCAQD Rule 230 was included in the December 20, 2019 SIP Submittal, and the EPA proposed approval in the February 23, 2021 action, we are deferring action on Rule 230 at this time. Therefore, except for Rule 230, the rules listed in Table 1 constitute the MCAQD's EPA-approved air quality preconstruction NSR permit program.

TABLE 1—MCAQD SUBMITTED RULES

Regulation & rule No.	Rule title	Adoption or amendment date	Submitted
Regulation I, Rule 100	General Provisions; General Provisions and Definitions	12/11/2019	12/20/2019
Regulation II, Rule 200	Permits and Fees; Permit Requirements	12/11/2019	12/20/2019
Regulation II, Rule 210 [1]	Permits and Fees; Title V Permit Provisions	12/11/2019	12/20/2019
Regulation II, Rule 220	Permits and Fees; Non-Title V Permit Provisions	12/11/2019	12/20/2019
Regulation II, Rule 230 *	Permits and Fees; General Permits	12/11/2019	12/20/2019
Regulation II, Rule 240	Permits and Fees; Federal Major New Source Review	12/11/2019	12/20/2019
Regulation II, Rule 241	Permits and Fees; Minor New Source Review	12/11/2019	12/20/2019

* The EPA is deferring action on Rule 230 at this time.

We proposed to approve these rules as part of the MCAQD's general and major source NSR permitting programs because we determined that these rules

[1] Rule 210 also contains provisions to address requirements under title V of the Act for operating permit programs, but we are not evaluating the rule for title V purposes at this time. We will evaluate Rule 210 for compliance with the requirements of title V of the Act and the EPA's implementing regulations in 40 CFR part 70 following receipt of an official part 70 program revision submittal from Maricopa County.

satisfy the substantive statutory and regulatory requirements for NSR permit programs as contained in (1) part C of title I (section 165) of the Act for Prevention of Significant Deterioration (PSD) program; (2) part D of title I (sections 172 and 173) of the Act for the nonattainment NSR program; (3) section 110(a)(2) of the Act for the general permitting requirements; (4) sections 110(l) and 193 of the Act for SIP revisions and the general savings clause; (5) the regulatory provisions in 40 CFR part 51, subpart I (Review of New Sources and Modifications) (40 CFR 51.160–51.166); and (6) subpart P (Protection of Visibility) (40 CFR 51.307).

We also proposed to approve these rules because we determined that they address the deficiencies identified in our conditional approval of Rules 100 and 200 in the EPA's April 5, 2019 action. *See* 84 FR 13543. Finally, we proposed that the rules listed in Table 1 will replace the SIP-approved NSR program rules listed in Table 2, in their entirety.

TABLE 2—MCAQD RULES TO BE REMOVED OR REPLACED

Regulation & rule No.	Rule title	Adoption or amendment date	SIP approval date	**Federal Register** citation
Regulation I, Rule 2, No. 11 "Alteration or Modification".	General Provisions; Definitions	June 23, 1980	June 18, 1982	47 FR 26382
Regulation I, Rule 2, No. 27 "Dust"	General Provisions; Definitions	June 23, 1980	April 12, 1982	47 FR 15579
Regulation I, Rule 2, No. 29 "Emission".	General Provisions; Definitions	June 23, 1980	April 12, 1982	47 FR 15579
Regulation I, Rule 2, No. 34 "Existing Source Performance Standards".	General Provisions; Definitions	June 23, 1980	April 12, 1982	47 FR 15579
Regulation I, Rule 2, No. 37 "Fly Ash".	General Provisions; Definitions	June 23, 1980	April 12, 1982	47 FR 15579
Regulation I, Rule 2, No. 39 "Fuel"	General Provisions; Definitions	June 23, 1980	April 12, 1982	47 FR 15579
Regulation I, Rule 2, No. 42 "Fume"	General Provisions; Definitions	June 23, 1980	April 12, 1982	47 FR 15579
Regulation I, Rule 2, No. 55 "Motor Vehicle".	General Provisions; Definitions	June 23, 1980	April 12, 1982	47 FR 15579
Regulation I, Rule 2, No. 59 "Non-Point Source".	General Provisions; Definitions	June 23, 1980	April 12, 1982	47 FR 15579
Regulation I, Rule 2, No. 60 "Odors"	General Provisions; Definitions	June 23, 1980	April 12, 1982	47 FR 15579
Regulation I, Rule 2, No. 64 "Organic Solvent".	General Provisions; Definitions	June 23, 1980	April 12, 1982	47 FR 15579
Regulation I, Rule 2, No. 70 "Plume"	General Provisions; Definitions	June 23, 1980	April 12, 1982	47 FR 15579
Regulation I, Rule 2, No. 80 "Smoke"	General Provisions; Definitions	June 23, 1980	April 12, 1982	47 FR 15579
Regulation I, Rule 2, No. 91 "Vapor"	General Provisions; Definitions	June 23, 1980	April 12, 1982	47 FR 15579
Regulation II, Rule 21, Section D.1 (AZ R9–3–101, Paragraph 52 "Dust").	Permits and Fees; Procedures for Obtaining an Installation Permit.	October 25, 1982	August 10, 1988; Vacated; restored on January 29, 1991.	53 FR 30224; 56 FR 3219
Regulation II, Rule 21, Section D.1 (AZ R9–3–101, Paragraph 56 "Emission").	Permits and Fees; Procedures for Obtaining an Installation Permit.	October 25, 1982	August 10, 1988; Vacated; restored on January 29, 1991.	53 FR 30224; 56 FR 3219
Regulation II, Rule 21, Section D.1 (AZ R9–3–101, Paragraph 63 "Existing Source Performance Standards").	Permits and Fees; Procedures for Obtaining an Installation Permit.	October 25, 1982	August 10, 1988; Vacated; restored on January 29, 1991.	53 FR 30224; 56 FR 3219
Regulation II, Rule 21, Section D.1 (AZ R9–3–101, Paragraph 70 "Fuel").	Permits and Fees; Procedures for Obtaining an Installation Permit.	October 25, 1982	August 10, 1988; Vacated; restored on January 29, 1991.	53 FR 30224; 56 FR 3219
Regulation II, Rule 21, Section D.1 (AZ R9–3–101, Paragraph 71 "Fuel Burning Equipment").	Permits and Fees; Procedures for Obtaining an Installation Permit.	October 25, 1982	August 10, 1988; Vacated; restored on January 29, 1991.	53 FR 30224; 56 FR 3219
Regulation II, Rule 21, Section D.1 (AZ R9–3–101, Paragraph 74 "Fume").	Permits and Fees; Procedures for Obtaining an Installation Permit.	October 25, 1982	August 10, 1988; Vacated; restored on January 29, 1991.	53 FR 30224; 56 FR 3219
Regulation II, Rule 21, Section D.1 (AZ R9–3–101, Paragraph 103 "Motor Vehicle").	Permits and Fees; Procedures for Obtaining an Installation Permit.	October 25, 1982	August 10, 1988; Vacated; restored on January 29, 1991.	53 FR 30224; 56 FR 3219
Regulation II, Rule 21, Section D.1 (AZ R9–3–101, Paragraph 114 "Non-Point Source").	Permits and Fees; Procedures for Obtaining an Installation Permit.	October 25, 1982	August 10, 1988; Vacated; restored on January 29, 1991.	53 FR 30224; 56 FR 3219
Regulation II, Rule 21, Section D.1 (AZ R9–3–101, Paragraph 122 "Photochemically Reactive Solvent").	Permits and Fees; Procedures for Obtaining an Installation Permit.	October 25, 1982	August 10, 1988; Vacated; restored on January 29, 1991.	53 FR 30224; 56 FR 3219
Regulation II, Rule 21, Section D.1 (AZ R9–3–101, Paragraph 123 "Plume").	Permits and Fees; Procedures for Obtaining an Installation Permit.	October 25, 1982	August 10, 1988; Vacated; restored on January 29, 1991.	53 FR 30224; 56 FR 3219
Regulation II, Rule 21, Section D.1 (AZ R9–3–101, Paragraph 128 "Process").	Permits and Fees; Procedures for Obtaining an Installation Permit.	October 25, 1982	August 10, 1988; Vacated; restored on January 29, 1991.	53 FR 30224; 56 FR 3219
Regulation II, Rule 21, Section D.1 (AZ R9–3–101, Paragraph 129 "Process Source").	Permits and Fees; Procedures for Obtaining an Installation Permit.	October 25, 1982	August 10, 1988; Vacated; restored on January 29, 1991.	53 FR 30224; 56 FR 3219
Regulation II, Rule 21, Section D.1 (AZ R9–3–101, Paragraph 150 "Smoke").	Permits and Fees; Procedures for Obtaining an Installation Permit.	October 25, 1982	August 10, 1988; Vacated; restored on January 29, 1991.	53 FR 30224; 56 FR 3219
Regulation II, Rule 21, Section D.1 (AZ R9–3–101, Paragraph 151 "Soot")[2].	Permits and Fees; Procedures for Obtaining an Installation Permit.	October 25, 1982	August 10, 1988; Vacated; restored on January 29, 1991.	53 FR 30224; 56 FR 3219

TABLE 2—MCAQD RULES TO BE REMOVED OR REPLACED—Continued

Regulation & rule No.	Rule title	Adoption or amendment date	SIP approval date	Federal Register citation
Regulation II, Rule 21, Section D.1 (AZ R9–3–101, Paragraph 160 ''Supplementary Control System (SCS)'').	Permits and Fees; Procedures for Obtaining an Installation Permit.	October 25, 1982	August 10, 1988; Vacated; restored on January 29, 1991.	53 FR 30224; 56 FR 3219
Rule 21, Section D.1 (AZ R9–3–101, Paragraph 166 ''Vapor'').	Permits and Fees; Procedures for Obtaining an Installation Permit.	October 25, 1982	August 10, 1988; Vacated; restored on January 29, 1991.	53 FR 30224; 56 FR 3219
Regulation II, Rule 21, Section D.1 (AZ R9–3–101, Paragraph 167 ''Vapor Pressure'').	Permits and Fees; Procedures for Obtaining an Installation Permit.	October 25, 1982	August 10, 1988; Vacated; restored on January 29, 1991.	53 FR 30224; 56 FR 3219
Regulation II, Rule 21, Section D.1 (AZ R9–3–101, Paragraph 168 ''Visible Emissions'').	Permits and Fees; Procedures for Obtaining an Installation Permit.	October 25, 1982	August 10, 1988; Vacated; restored on January 29, 1991.	53 FR 30224; 56 FR 3219
Regulation I, Rule 100 (except Sections 200.24, 200.73, 200.104(c)).	General Provisions; General Provisions and Definitions.	February 3, 2016	April 5, 2019	84 FR 13543
Regulation II, Rule 200	Permits and Fees; Permit Requirements.	February 3, 2016	April 5, 2019	84 FR 13543
Regulation II, Rule 210	Permits and Fees; Title V Permit Provisions.	February 3, 2016	April 5, 2019	84 FR 13543
Regulation II, Rule 220	Permits and Fees; Non-Title V Permit Provisions.	February 3, 2016	April 5, 2019	84 FR 13543
Regulation II, Rule 240 (except Section 305).	Permits and Fees; Federal Major New Source Review (NSR).	February 3, 2016	April 5, 2019	84 FR 13543
Regulation II, Rule 241	Permits and Fees; Minor New Source Review (NSR).	September 7, 2016 [3]	April 5, 2019	84 FR 13543

Our TSD, which can be found in the docket for this rulemaking, contains a more detailed discusssion of the approval criteria and our evaluation of the rules in Table 1.

II. Public Comments and EPA Responses

The EPA's February 23, 2021 proposed rulemaking provided a 30-day public comment period. We received comments from the Arizona Center for Law in the Public Interest (ACLPI). The full text of the ACLPI's public comments is available in the docket for this rulemaking. The EPA's summaries of, and responses to, these public comments are as follows:

A. Exemption for Agricultural Equipment Used in Normal Farm Operations in Rule 200

Comment: The commenter states that the MCAQD has failed to identify the types of equipment that it considers to be ''agricultural equipment used in normal farm operations'' and that ''fugitive emissions'' are not a type of ''activity'' or ''equipment.'' The commenter states that the MCAQD's exemption for agricultural equipment used in normal farm operations is vague to the point of unenforceability. The commenter states that this vagueness prevents scrutiny of whether the fugitive emissions are actually fugitive (*i.e.,* could not reasonably pass through a stack, chimney, vent, or other functionally equivalent opening).

Response: The EPA respectfully disagrees with this comment. In our proposed rulemaking for the June 11, 2018 conditional approval action, the EPA stated that the MCAQD must provide a basis consistent with 40 CFR 51.160(e) to demonstrate that regulation of the equipment exempted under Rule 200, Section 305 is not needed for the MCAQD's federal NSR program to meet requirements for attainment and maintenance of the NAAQS or review for compliance with the control strategy. *See* 83 FR 26912, 26915 (June 11, 2018). Among other things, we also stated that such demonstrations must address identification of the types of equipment that the MCAQD considers to be ''agricultural equipment used in normal farm operations.'' In its December 20, 2019 SIP Submittal, the MCAQD responded by explaining that it had revised Rule 200 to exempt only ''*fugitive* emissions from agricultural equipment used in normal farm operations'' [emphasis added]. *See* Rule 200, Section 305.2.i.

The submitted revision to the ''agricultural equipment used in normal farm operations'' exemption considerably clarifies and narrows the scope of the exemption. Although, as the commenter mentions, fugitive emissions are not a specific type of activity or equipment, we find that the clarification regarding the scope of the exemption in the rule revision that was provided by the MCAQD is sufficient to meet the requirements of our June 11, 2018 conditional approval action and the CAA. As an initial matter, we note that, in addition to the fact that the exemption is now limited to fugitive emissions from agricultural equipment used in normal farm operations, the explicit language of the exemption provision clearly specifies that it does not apply to any equipment that would otherwise require a permit under Title V of the Act. A title V permit is required for any major source [4] as defined in 40 CFR 70.2.[5] A stationary source that is required to obtain a major NSR (PSD or nonattainment NSR) permit, is also required to obtain a title V permit.[6]

[2] The correct citation for the definition of ''Soot'' is Rule 21, Section D.1 (AZ R9–3–101, Paragraph 151), and not Paragraph 152 which was in the April 5, 2019 final action.

[3] The correct adoption or amendment date for Rule 241 is September 7, 2016, and not February 3, 2016 as stated in the EPA's actions in 84 FR 13550 (April 5, 2019), 84 FR 18396 (May 1, 2019), and 86 FR 10906 (February 23, 2021).

[4] ''Stationary source'' means any building, structure, facility, or installation which emits or may emit a regulated NSR pollutant. *See* Rule 100, Section 200.123, 40 CFR 51.165(a)(1)(i), and 40 CFR 51.166(b)(5).

[5] Under 40 CFR 70.2, a major source is a stationary source of air pollutants, as defined in section 302 of the Act, that directly emits, or has the potential to emit, 100 tpy or more of any air pollutant subject to regulation (including any major source of fugitive emissions of any such pollutant, as determined by rule by the Administrator). It is also defined as a stationary source that emits or has the potential to emit, in the aggregate, 10 tpy or more of any hazardous air pollutant which has been listed pursuant to section 112(b) of the Act, 25 tpy or more of any combination of such hazardous air pollutants, or such lesser quantity as the Administrator may establish by rule.

[6] For nonattainment areas, a major NSR permit is required for a stationary source of air pollutants that emits, or has the potential to emit, 100 tons per year or more of any regulated NSR pollutant, except that lower emissions thresholds apply in areas subject to subpart 2, subpart 3, or subpart 4 of part D, title I of the CAA (*e.g.,* since Maricopa County is a serious nonattainment area for PM_{10}, an emissions threshold of 70 tpy applies). *See* Rule 240, Section 202 and 40 CFR 51.165(a)(1)(iv)(A)(1). For attainment or unclassifiable areas, a major NSR permit is required for a stationary source of air pollutants, that belongs to one of the 28 source

Therefore, no major stationary source qualifies for the MCAQD's ''*fugitive* emissions from agricultural equipment used in normal farm operations'' exemption (agricultural equipment exemption), regardless of whether any of its emissions units emit fugitive emissions. The rule is also clear that the exemption does not apply to any equipment subject to the New Source Performance Standards (NSPS) under 40 CFR part 60, nor to the National Emission Standards for Hazardous Air Pollutants (NESHAP) under 40 CFR parts 61 and 63. Again, this is the case regardless of whether the emissions are fugitive or non-fugitive. For example, diesel-fired engines are commonly used at agricultural sources, and are subject to a NSPS and/or NESHAP requirement.[7] Accordingly, such engines do not qualify for the agricultural equipment exemption. The EPA also notes that the MCAQD's permit program only applies to stationary sources, therefore any mobile equipment, such as tractors, are already exempt from permit program requirements. Thus, the exemption is limited to fugitive emissions from agricultural equipment used in normal farm operations, located at minor stationary sources that are not subject to any NSPS or NESHAP. The EPA believes this is a sufficiently small universe of sources to satisfy the requirements of 40 CFR 51.160(e) and our June 11, 2018 conditional approval action.

The EPA also disagrees with the commenter's claim that the revision to Section 305.2.i is too vague to be enforceable. Fugitive emissions are defined in Rule 100, Section 200.56 as ''[a]ny emission which could not reasonably pass through a stack, chimney, vent, or other functionally equivalent opening.'' This definition is consistent with the EPA's regulatory definition of ''fugitive emissions'' for SIP-approved PSD and NNSR programs at 40 CFR 51.166(b)(20) and 51.165(a)(1)(ix), respectively. The MCAQD considers this definition and the specific circumstances of the emissions-generating activity when implementing various NSR requirements and determining whether emissions are fugitive. In this case, the MCAQD can determine if the emissions from agricultural equipment are fugitive, and thus qualify for the exemption, before they address whether they are used in ''normal farm operations.'' Under the federal NSR permitting program, fugitive emissions need not be considered when determining permit requirements, unless the source is one of the categorical sources identified. *See* Rule 100, Section 200.28; 40 CFR 51.165(a)(1)(iv)(C) and 51.166(b)(1)(iii). Therefore, we disagree with the commenter that the MCAQD's exemption prevents scrutiny of whether potentially exempt emissions are, in fact, fugitive emissions. We also note that the MCAQD's SIP-approved minor NSR program already exempts fugitive emissions from permit requirements for a minor source that doesn't belong to one of the categorical sources under Rule 100, Section 200.28. *See* 84 FR 13543 (April 5, 2019) and 84 FR 18392 (May 1, 2019).

In sum, while the revised exemption does not specifically define ''agricultural equipment used in normal farm operations,'' we have determined that the revision clarifies and narrows how the exemption is used and addresses the concerns in our conditional approval regarding the need for additional clarification regarding this exemption.

Comment: The commenter stated that the MCAQD still provides no basis for determining that fugitive emissions from ''agricultural equipment used in normal farm operations'' do not need to be regulated as part of the MCAQD's minor NSR program under 40 CFR 51.160(e). The commenter stated that although the EPA compared the MCAQD's exemption to a similarly worded exemption in the State regulations implemented by the ADEQ, the ADEQ's regulation suffers from the same problem. The commenter stated that, as with the ADEQ's exemption, the MCAQD's exemption violates CAA section 110(l) and Appendix V, sections 2.2(d) and 2.2(e).

Response: The EPA respectfully disagrees with this comment. The MCAQD's December 20, 2019 SIP Submittal provides a rationale and basis for the exemption of certain agricultural equipment used in normal farm operations under 40 CFR 51.160(e). *See* December 20, 2019 MCAQD Submittal at 12–14. This information, in addition to other available information, demonstrates that the MCAQD reasonably concluded that the exemption of fugitive emissions from agricultural equipment used in normal farm operations is inconsequential to attainment and maintenance of the NAAQS.[8]

As discussed in the EPA's response to the previous comment, the exemption in Rule 200, Section 305.2.i for agricultural equipment used in normal farm operations only applies to fugitive emissions, is only available to minor sources, and is not available for sources subject to an NSPS or NESHAP. Additionally, the MCAQD's SIP-approved minor NSR program already exempts fugitive emissions from permit requirements for a minor source that doesn't belong to one of the categorical sources under Rule 100, Section 200.28. *See* 84 FR 13543 (April 5, 2019) and 84 FR 18392 (May 1, 2019).

Thus, there is sufficient evidence that the exemption for fugitive emissions from agricultural equipment used in normal farm operations is available only to a very narrow group of minor sources. Such emissions are already exempt from regulation under NSR, or they come from stationary equipment such as boilers or engines, which are subject to the NSPS and thus do not qualify for the exemption in Rule 200, Section 305. We therefore find the MCAQD's exemption for fugitive emissions from agricultural equipment used in normal farm operations to be reasonable under 40 CFR 51.160(e).

The commenters also indicate that the EPA's approval of the MCAQD's 2019 NSR Submittal conflicts with the requirement in CAA section 110(l) that the EPA ''shall not approve a revision of a plan if the revision would interfere with any applicable requirement concerning attainment and reasonable further progress . . . or any other applicable requirement of this chapter.'' For the reasons stated in this document and in our proposal, we continue to find that this action strengthens the overall SIP and does not relax or otherwise interfere with any SIP requirements related to attaining the NAAQS in Maricopa County, Arizona.

The commenters make the related argument that the MCAQD's SIP revision does not satisfy section 2.2(d) of Appendix V to 40 CFR part 51.[9] As

categories, and which emits, or has the potential to emit, 100 tons per year or more of any regulated NSR pollutant; a major NSR permit is also required for a stationary source which emits, or has the potential to emit, 250 tons per year or more of a regulated NSR pollutant. *See* Rule 240, Section 203, 40 CFR 51.166(b)(1)(i)(a)–(b) and 40 CFR 52.21(b)(1)(i)(a)–(b).

[7] See the NSPS regulations at 40 CFR part 60, subparts IIII and JJJJ, and the NESHAP regulations 40 CFR part 63, subparts ZZZZ.

[8] In reviewing the MCAQD's minor NSR program under 40 CFR 51.160(e), the EPA considered it appropriate to exclude emissions from its NSR program if such emissions would be ''inconsequential to attainment or maintenance of the NAAQS.'' *See* 86 FR 31927, 31936, footnote 21 (June 16, 2021). This was the same standard that the EPA used in developing the permitting thresholds for its minor NSR program for Indian country. *See* 76 FR 38748, 38758 (July 1, 2011).

[9] The commenters reference the portion of section 2.2(d) that requires SIP submittals to demonstrate ''that the national ambient air quality standards, prevention of significant deterioration increments,

Continued

described above, the MCAQD's 2019 NSR Submittal contains sufficient information to support our conclusion that the MCAQD's NSR program meets the requirements of the CAA and its implementing regulations and will not interfere with attainment or maintenance of the NAAQS.

Lastly, in response to the commenter's argument that the MCAQD should have included a modeling demonstration to meet the requirements of section 2.2(e) of Appendix V to 40 CFR part 51, the commenters have not accurately characterized these requirements. We do not interpret section 2.2(e) of Appendix V to require that every SIP submittal contain a modeling demonstration, as implied by the commenters. Instead, when a modeling demonstration is necessary and is therefore included in a submittal to support the SIP revision, then the submittal must also contain the underlying modeling information outlined in section 2.2(e). We find that section 2.2(e) of Appendix V is not applicable to the MCAQD's NSR Submittal because modeling was not used to support this SIP revision nor was a modeling demonstration required in this instance.

For the reasons discussed above, we find that the MCAQD reasonably concluded that the exemption of ''fugitive emissions from agricultural equipment used in normal farm operations'' from its minor NSR program will not interfere with attainment or maintenance of the NAAQS, consistent with 40 CFR 51.160(e). Because the exemption will not interfere with attainment or maintenance of the NAAQS, or interfere with the overall control strategy, it is consistent with CAA section 110(l) and section 2.2(d) of Appendix V to 40 CFR part 51.

Comment: The commenter stated that, while fugitive dust emissions from farm operations are primarily addressed through Arizona's Ag BMP general permit program, experience with the Ag BMP program in both Maricopa County and Pinal County has demonstrated that it is inadequate to ensure compliance with the PM_{10} NAAQS. The commenter further stated that both the MCAQD and ADEQ PM_{10} nonattainment areas continue to violate the NAAQS decades after the Ag BMP program was adopted and agricultural emissions are a key contributor. The commenter also noted that the EPA proposed a limited approval and limited disapproval of Arizona's Ag BMP statute and regulations for Arizona on February 26, 2021. The commenter indicated that in light of these concerns, the EPA must disapprove the MCAQD's exemption for ''agricultural equipment used in normal farm operations.''

Response: The EPA respectfully disagrees that it must disapprove the MCAQD's exemption for ''agricultural equipment used in normal farm operations'' based on the commenter's concerns about Arizona's Ag BMP program. As discussed in detail in our responses above, we find that the MCAQD's exemption from NSR review of a narrow subset of minor agricultural sources with fugitive emissions through its exemption for ''fugitive emissions from agricultural equipment used in normal farm operations'' is reasonable. The EPA is not evaluating, updating, or relying on the existing EPA-approved Ag BMP program rules in the Arizona SIP as part of this rulemaking.[10] We understand that the ADEQ submitted revisions to the Arizona SIP to update the Ag BMP rules; however, those revisions are not part of our NSR rulemaking action.

B. Public Hearing Requirements for Minor NSR Requirements in Rule 241

Comment: The commenter stated that the MCAQD revised Rule 241, Section 310 by deleting public hearing requirements and stated that the revised provision provides that the public notice requirements in Rules 210 and/or 220 shall be required if the emissions of any one pollutant is equal to or greater than the public notice thresholds as defined in Rule 100. The commenter further noted that the EPA stated that the same or similar language that was deleted from Rule 241, Section 310 was contained in portions of Rules 210 and 220, and that therefore the change was consistent with the requirements of 40 CFR 51.161(a), and the EPA's regulations at 40 CFR 51.160–164. The commenter then states that Rule 210, Sections 408.4.g and 408.5, and Rule 220, Sections 407.5 and 407.7 contain more than just public notice requirements, but also contain requirements to accept public comments and hold a hearing upon request. The commenter concluded by asserting that Rule 241, Section 310 should be amended to clarify that it incorporates all of the public participation requirements in Rules 210 and 220.

Response: The EPA respectfully disagrees with the commenter that Rule 241, Section 310 should be amended to make the suggested clarification. Rule 241, Section 310 states that ''Public notice requirements pursuant to Rules 210 and or 220 of these rules shall be required for a permit or permit revision if . . .'' emissions are equal to or greater than the public notice thresholds in Rule 100. The public notice requirements contained in Rules 210 and 220 are found in Sections 408 and 407, respectively, which are titled ''PUBLIC PARTICIPATION.'' Critically, the public hearing requirements of those rules contain public notice requirements, such as the requirement to publish a notice at least two times in a newspaper of general circulation to ensure adequate notice to the affected public. The requirement to accept public comments is also linked to the requirement to provide public notice in both rules, such as the requirement to allow at least 30 days for public comment following public notice of the comment period. While we agree that it would be clearer if Rule 241, Section 310 stated that the ''public participation'' rather than the ''public notice'' requirements of Rules 210 and/or 220 must be met, we believe it is sufficiently clear that all of the public participation requirements in Rule 210, Section 408 and Rule 220, Section 407 are applicable if emissions are equal to or greater than the public notice thresholds in Rule 100. Therefore, we continue to find that the revisions to Rule 241, Section 310 are acceptable and consistent with the requirements of the Act and its implementing regulations.

C. Public Notification Requirements for General Permits in Rule 230

The commenter also provided comments regarding our proposed approval of Rule 230 into the MCAQD portion of the Arizona SIP. The EPA is deferring final action on Rule 230 at this time. Therefore, the EPA is not addressing these comments as part of this final action.

III. Additional Developments After Notice of Proposed Rulemaking

On January 29, 2021, the U.S. Court of Appeals for the District of Columbia Circuit issued its opinion in *Sierra Club* v. *EPA* (Case No. 15–1465), granting in part and denying in part petitions for review of four provisions of the 2015 and 2018 ozone NAAQS implementation rules. Among other things, the court vacated the provisions

reasonable further progress demonstration, and visibility, as applicable, are protected if the plan is approved and implemented.'' See 40 CFR part 51, Appendix V, section 2.2(d).

[10] Further, to the extent the commenter has raised concerns about the regulation of air pollution sources located in Pinal County, the commenter has not explained how those concerns are relevant to this rulemaking action, which pertains specifically to the MCAQD's NSR program, which applies only in Maricopa County.

of the rule allowing interprecursor trading of ozone precursors (*See* 2018 Implementation Rule, 83 FR 62998, 63016–63021). The court's judgment became final and effective on March 23, 2021, when the court issued its mandate. In response to this, on June 10, 2021, the ADEQ withdrew the provisions in Rule 240, Section 304.4.e.(1) for interpollutant offsetting from the NNSR requirements of the rule. The EPA finds this withdrawal acceptable, given the court's vacatur of these provisions in the EPA's regulations. Accordingly, this provision will not be included in the version of Rule 240 incorporated into the Maricopa County portion of the Arizona SIP.

We note that the EPA recently adopted a rule known as the NSR Error Corrections Rule, effective August 18, 2021, which corrected minor, inadvertent, and non-substantive errors in 40 CFR parts 51 and 52, which govern NSR permitting programs, and updated the regulatory text to reflect statutory changes and certain court decisions vacating elements of the regulatory text, but did not change the requirements within these programs. *See* 86 FR 37918 (July 19, 2021). States have discretion as to when to make the changes indicated in this rulemaking and may choose to combine them with other SIP submittals. *See* 86 FR 37918, 37923–37924. Accordingly, this recent rulemaking does not affect our final action.

IV. EPA Action

No comments were submitted that change our assessment that the MCAQD's Rules 100, 200, 210, 220, 240, and 241 satisfy the applicable CAA requirements, nor were any comments submitted that change our assessment that certain MCAQD rules should be removed from the Arizona SIP. As discussed above, we are deferring action on Rule 230 at this time. Therefore, as authorized under CAA sections 110(k)(3) and 301(a), and for the reasons set forth in our February 23, 2021 proposed rule, we are finalizing full approval of submitted Rules 100, 200, 210, 220, 240 (except Section 304.4.e.(1)), and 241, in the MCAQD portion of the Arizona SIP. We are also removing from the MCAQD portion of the Arizona SIP the rules identified in Table 2.

This action incorporates Rules 100, 200, 210, 220, 240 (except Section 304.4.e.(1)), and 241 into the federally enforceable SIP through revisions to 40 CFR 52.120 (Identification of plan). We are amending 40 CFR 52.119(b) (Identification of plan—conditional approvals) to remove the conditional approval of Rules 100 and 200 since the MCAQD's December 20, 2019 Submittal addressed the deficiencies identified by the EPA, and we are now fully approving Rules 100 and 200. We are amending the PSD FIP requirements in 40 CFR 52.144 (Significant deterioration of air quality) since we are approving the PSD program provisions in Rule 240 into the MCAQD portion of the Arizona SIP. We are also amending the visibility FIP in 40 CFR 52.145(b) (Visibility protection) since we have determined that the MCAQD's NNSR and PSD programs comply with the visibility requirements in 40 CFR 51.307.

V. Incorporation by Reference

In this rule, the EPA is finalizing regulatory text that includes incorporation by reference. In accordance with requirements of 1 CFR 51.5, the EPA is finalizing the incorporation by reference of the MCAQD rules described in Table 1 of this preamble, with the exception of Rule 230. The EPA has made, and will continue to make, these materials available through *https://www.regulations.gov* and in hard copy at the EPA Region IX office (please contact the person identified in the **FOR FURTHER INFORMATION CONTACT** section of this preamble for more information). Therefore, these materials have been approved by the EPA for inclusion in the Arizona SIP, have been incorporated by reference by the EPA into that plan, are federally enforceable under sections 110 and 113 of the CAA as of the effective date of the final rulemaking of the EPA's approval, and will be incorporated by reference in the next update to the SIP compilation.[11]

Also in this document, as described in the amendments to 40 CFR part 52 set forth below, the EPA is removing provisions from the EPA-approved rules for the ADEQ portion of the Arizona SIP, which is incorporated by reference in accordance with the requirements of 1 CFR part 51.

VI. Statutory and Executive Order Reviews

Under the Clean Air Act, the Administrator is required to approve a SIP submission that complies with the provisions of the Act and applicable federal regulations. 42 U.S.C. 7410(k); 40 CFR 52.02(a). Thus, in reviewing SIP submissions, the EPA's role is to approve state choices, provided that they meet the applicable criteria of the Clean Air Act. Accordingly, this action merely approves state law as meeting federal requirements and does not impose additional requirements beyond those imposed by state law. For that reason, this action:

- Is not a significant regulatory action subject to review by the Office of Management and Budget under Executive Orders 12866 (58 FR 51735, October 4, 1993) and 13563 (76 FR 3821, January 21, 2011);
- Does not impose an information collection burden under the provisions of the Paperwork Reduction Act (44 U.S.C. 3501 *et seq.*);
- Is certified as not having a significant economic impact on a substantial number of small entities under the Regulatory Flexibility Act (5 U.S.C. 601 *et seq.*);
- Does not contain any unfunded mandate or significantly or uniquely affect small governments, as described in the Unfunded Mandates Reform Act of 1995 (Pub. L. 104–4);
- Does not have Federalism implications as specified in Executive Order 13132 (64 FR 43255, August 10, 1999);
- Is not an economically significant regulatory action based on health or safety risks subject to Executive Order 13045 (62 FR 19885, April 23, 1997);
- Is not a significant regulatory action subject to Executive Order 13211 (66 FR 28355, May 22, 2001);
- Is not subject to requirements of Section 12(d) of the National Technology Transfer and Advancement Act of 1995 (15 U.S.C. 272 note) because application of those requirements would be inconsistent with the Clean Air Act; and
- Does not provide the EPA with the discretionary authority to address, as appropriate, disproportionate human health or environmental effects, using practicable and legally permissible methods, under Executive Order 12898 (59 FR 7629, February 16, 1994).

In addition, the SIP is not approved to apply on any Indian reservation land or in any other area where the EPA or an Indian tribe has demonstrated that a tribe has jurisdiction. In those areas of Indian country, the rule does not have tribal implications and will not impose substantial direct costs on tribal governments or preempt tribal law as specified by Executive Order 13175 (65 FR 67249, November 9, 2000).

The Congressional Review Act, 5 U.S.C. 801 *et seq.,* as added by the Small Business Regulatory Enforcement Fairness Act of 1996, generally provides that before a rule may take effect, the agency promulgating the rule must submit a rule report, which includes a copy of the rule, to each House of the Congress and to the Comptroller General of the United States. The EPA will

[11] 62 FR 27968 (May 22, 1997).

submit a report containing this action and other required information to the U.S. Senate, the U.S. House of Representatives, and the Comptroller General of the United States prior to publication of the rule in the **Federal Register**. A major rule cannot take effect until 60 days after it is published in the **Federal Register**. This action is not a ''major rule'' as defined by 5 U.S.C. 804(2).

Under section 307(b)(1) of the Clean Air Act, petitions for judicial review of this action must be filed in the United States Court of Appeals for the appropriate circuit by [Insert date 60 days after date of publication in the **Federal Register**]. Filing a petition for reconsideration by the Administrator of this final rule does not affect the finality of this action for the purposes of judicial review nor does it extend the time within which a petition for judicial review may be filed and shall not postpone the effectiveness of such rule or action. This action may not be challenged later in proceedings to enforce its requirements. *See* CAA section 307(b)(2).

List of Subjects in 40 CFR Part 52

Environmental protection, Administrative practice and procedure, Air pollution control, Carbon monoxide, Incorporation by reference, Intergovernmental relations, Lead, Nitrogen dioxide, Ozone, Particulate matter, Reporting and recordkeeping requirements, Sulfur dioxide, Volatile organic compounds.

Authority: 42 U.S.C. 7401 *et seq.*

Dated: February 3, 2022.

Martha Guzman Aceves,

Regional Administrator, Region IX.

Part 52, Chapter I, Title 40 of the Code of Federal Regulations is amended as follows:

PART 52—APPROVAL AND PROMULGATION OF IMPLEMENTATION PLANS

■ 1. The authority citation for part 52 continues to read as follows:

Authority: 42 U.S.C. 7401 *et seq.*

Subpart D—Arizona

§ 52.119 [Amended]

■ 2. In § 52.119, remove and reserve paragraph (b).

■ 3. In § 52.120, revise table 4 in paragraph (c) to read as follows:

§ 52.120 Identification of plan.

* * * * *

(c) * * *

TABLE 4 TO PARAGRAPH (c)—EPA-APPROVED MARICOPA COUNTY AIR POLLUTION CONTROL REGULATIONS

County citation	Title/subject	State effective date	EPA approval date	Additional explanation
Pre-July 1988 Rule Codification				
Regulation II—Permits				
Rule 22 (paragraphs A, C, D, F, G, and H).	Permit Denial-Action-Transfer-Expiration-Posting-Revocation-Compliance.	August 12, 1971	July 27, 1972, 37 FR 15080.	Paragraphs B and E have been superseded.
Rule 27	Performance tests	June 23, 1980	April 12, 1982, 47 FR 15579.	Submitted on June 23, 1980.
Rule 28	Permit Fees	March 8, 1982	June 18, 1982, 47 FR 26382.	Submitted on March 8, 1982.
Regulation III—Control of Air Contaminants				
Rule 32, Paragraph G	Other Industries	October 1, 1975	April 12, 1982, 47 FR 15579.	Paragraph G of Rule 32 (''Odors and Gaseous Emissions'') is titled ''Other Industries.'' Submitted on June 23, 1980.
Rule 32, Paragraph H	Fuel Burning Equipment for Producing Electric Power (Sulfur Dioxide).	October 1, 1975	April 12, 1982, 47 FR 15579.	Paragraph H of Rule 32 (''Odors and Gaseous Emissions'') is titled ''Fuel Burning Equipment for Producing Electric Power (Sulfur Dioxide).'' Submitted on June 23, 1980.
Rule 32, Paragraph J	Operating Requirements for an Asphalt Kettle.	June 23, 1980	April 12, 1982, 47 FR 15579.	Paragraph J of Rule 32 (''Odors and Gaseous Emissions'') is titled ''Operating Requirements for an Asphalt Kettle.'' Submitted on June 23, 1980.
Rule 32, Paragraph K	Emissions of Carbon Monoxide	June 23, 1980	April 12, 1982, 47 FR 15579.	Paragraph K of Rule 32 (''Odors and Gaseous Emissions'') is titled ''Emissions of Carbon Monoxide.'' Submitted on June 23, 1980.
Rule 32 (Paragraphs A through F only).	Odors and Gaseous Emissions	August 12, 1971	July 27, 1972, 37 FR 15080.	Paragraph G was superseded by approval of paragraph J of amended Rule 32. Submitted on May 26, 1972.
Rule 35	Incinerators	August 12, 1971	July 27, 1972, 37 FR 15080.	Superseded by approval of Maricopa Rule 313 published on September 25, 2014, except for Hospital/Medical/Infectious Waste Incinerators. Submitted on May 26, 1972.
Regulation IV—Production of Records; Monitoring; Testing and Sampling Facilities				
Rule 41, paragraph A	Monitoring	August 12, 1971	July 27, 1972, 37 FR 15080.	Submitted on May 26, 1972.
Rule 41, paragraph B	Monitoring	October 2, 1978	April 12, 1982, 47 FR 15579.	Submitted on January 18, 1979.
Rule 42	Testing and Sampling	August 12, 1971	July 27, 1972, 37 FR 15080.	Submitted on May 26, 1972.

TABLE 4 TO PARAGRAPH (c)—EPA-APPROVED MARICOPA COUNTY AIR POLLUTION CONTROL REGULATIONS—Continued

County citation	Title/subject	State effective date	EPA approval date	Additional explanation
Regulation VII—Emergency Procedures				
Rule 74, paragraph C	Public Notification	June 23, 1980	April 12, 1982, 47 FR 15579.	Submitted on June 23, 1980. Paragraphs A, B, and D superseded by approval of Rule 510 published on November 9, 2009.
Regulation VIII—Validity and Operation				
Rule 81	Operation	August 12, 1971	July 27, 1972, 37 FR 15080.	Submitted on May 26, 1972.
Post-July 1988 Rule Codification				
Regulation I—General Provisions				
Rule 100	General Provisions and Definitions	December 11, 2019	February 15, 2022, [INSERT **FEDERAL REGISTER** CITATION].	Submitted on December 20, 2019.
Rule 140	Excess Emissions	Revised September 5, 2001.	August 27, 2002, 67 FR 54957.	Submitted on February 22, 2002.
Regulation II—Permits and Fees				
Rule 200	Permit Requirements	December 11, 2019	February 15, 2022, [INSERT **FEDERAL REGISTER** CITATION].	Submitted on December 20, 2019.
Rule 210	Title V Permit Provisions	December 11, 2019	February 15, 2022, [INSERT **FEDERAL REGISTER** CITATION].	Submitted on December 20, 2019.
Rule 220	Non-Title V Permit Provisions	December 11, 2019	February 15, 2022, [INSERT **FEDERAL REGISTER** CITATION].	Submitted on December 20, 2019.
Rule 240 (except Section 304.4.e.(1)).	Federal Major New Source Review (NSR)	December 11, 2019	February 15, 2022, [INSERT **FEDERAL REGISTER** CITATION].	Submitted on December 20, 2019.
Rule 241	Minor New Source Review (NSR)	December 11, 2019	February 15, 2022, [INSERT **FEDERAL REGISTER** CITATION].	Submitted on December 20, 2019.
Rule 242	Emissions Offsets Generated by the Voluntary Paving of Unpaved Roads.	June 20, 2007	August 6, 2007, 72 FR 43538.	Submitted on July 5, 2007.
Regulation III—Control of Air Contaminants				
Rule 300	Visible Emissions	March 12, 2008	July 28, 2010, 75 FR 44141.	Submitted on July 10, 2008.
Rule 310	Fugitive Dust From Dust-Generating Operations.	January 27, 2010	December 15, 2010, 75 FR 78167.	Submitted on April 12, 2010. Cites appendices C and F, which are listed separately in this table.
Rule 310.01	Fugitive Dust From Non-Traditional Sources of Fugitive Dust.	January 27, 2010	December 15, 2010, 75 FR 78167.	Submitted on April 12, 2010. Cites appendix C, which is listed separately in this table.
Rule 311	Particulate matter from process industries	August 2, 1993	April 10, 1995, 60 FR 18010. Vacated by *Ober* decision. Restored August 4, 1997, 62 FR 41856.	Submitted on March 3, 1994.
Rule 312	Abrasive Blasting	July 13, 1988	January 4, 2001, 66 FR 730.	Submitted on January 4, 1990.
Rule 313	Incinerators, Burn-Off Ovens and Crematories.	May 9, 2012	September 25, 2014, 79 FR 57445.	Submitted on August 27, 2012.
Rule 314	Open Outdoor Fires and Indoor Fireplaces at Commercial and Institutional Establishments.	March 12, 2008	November 9, 2009, 74 FR 57612.	Submitted on July 10, 2008.
Rule 316	Nonmetallic Mineral Processing	November 7, 2018	7/15/2020, 85 FR 42726	Submitted on November 19, 2018.
Rule 318	Approval of Residential Woodburning Devices.	April 21, 1999	November 8, 1999, 64 FR 60678.	Submitted on August 4, 1999.
Rule 322	Power Plant Operations	October 17, 2007	October 14, 2009, 74 FR 52693.	Submitted on January 9, 2008.
Rule 323	Fuel Burning Equipment from Industrial/Commercial/Institutional (ICI) Sources.	November 2, 2016	July 20, 2020, 85 FR 43692.	Submitted on June 22, 2017.
Rule 324	Stationary Reciprocating Internal Combustion Engines (RICE).	November 2, 2016	July 20, 2020, 85 FR 43692.	Submitted on June 22, 2017.
Rule 331	Solvent Cleaning	April 21, 2004	December 21, 2004, 69 FR 76417.	Submitted on July 28, 2004.
Rule 333	Petroleum Solvent Dry Cleaning	June 19, 1996	February 9, 1998, 63 FR 6489.	Submitted on February 26, 1997.
Rule 335	Architectural Coatings	July 13, 1988	January 6, 1992, 57 FR 354.	Submitted on January 4, 1990.
Rule 336	Surface Coating Operations	November 2, 2016	January 7, 2021, 86 FR 971.	Submitted on June 22, 2017.

TABLE 4 TO PARAGRAPH (c)—EPA-APPROVED MARICOPA COUNTY AIR POLLUTION CONTROL REGULATIONS—Continued

County citation	Title/subject	State effective date	EPA approval date	Additional explanation
Rule 337	Graphic Arts	August 17, 2011	August 27, 2019, 84 FR 44701.	Submitted on January 15, 2014.
Rule 338	Semiconductor Manufacturing	June 19, 1996	February 9, 1998, 63 FR 6489.	Submitted on February 26, 1997.
Rule 340	Cutback and Emulsified Asphalt	September 21, 1992	February 1, 1996, 61 FR 3578.	Submitted on November 13, 1992.
Rule 341	Metal Casting	August 5, 1994	February 12, 1996, 61 FR 5287.	Submitted on August 16, 1994.
Rule 342	Coating Wood Furniture and Fixtures	November 2, 2016	August 27, 2019, 84 FR 44701.	Submitted on June 22, 2017.
Rule 343	Commercial Bread Bakeries	February 15, 1995	March 17, 1997, 62 FR 12544.	Submitted on August 31, 1995.
Rule 344	Automobile Windshield Washer Fluid	April 7, 1999	November 30, 2001, 66 FR 59699.	Submitted on August 4, 1999.
Rule 346	Coating Wood Millwork	November 20, 1996	February 9, 1998, 63 FR 6489.	Submitted on March 4, 1997.
Rule 347	Ferrous Sand Casting	March 4, 1998	June 12, 2000, 65 FR 36788.	Submitted on August 4, 1999.
Rule 348	Aerospace Manufacturing and Rework Operations.	April 7, 1999	September 20, 1999, 64 FR 50759.	Submitted on August 4, 1999.
Rule 349	Pharmaceutical, Cosmetic, and Vitamin Manufacturing Operations.	April 7, 1999	June 8, 2001, 66 FR 30815.	Submitted on August 4, 1999.
Rule 350	Storage and Transfer of Organic Liquids (Non-Gasoline) at an Organic Liquid Distribution Facility.	11/02/2016	2/26/2020, 85 FR 10986	Submitted on June 22, 2017.
Rule 351	Storage and Loading of Gasoline at Bulk Gasoline Plants and Bulk Gasoline Terminals.	11/02/2016	2/26/2020, 85 FR 10986	Submitted on June 22, 2017.
Rule 352	Gasoline Cargo Tank Testing and Use	11/02/2016	2/26/2020, 85 FR 10986	Submitted on June 22, 2017.
Rule 353	Storage and Loading of Gasoline at Gasoline Dispensing Facilities.	11/02/2016	2/26/2020, 85 FR 10986	Submitted on June 22, 2017.
Rule 358	Polystyrene Foam Operations	April 20, 2005	May 26, 2005, 70 FR 30370.	Submitted on April 25, 2005.
Regulation V—Air Quality Standards and Area Classification				
Rule 510	Air Quality Standards	12/11/2019	10/4/2021, 86 FR 54628	The December 11, 2019 version of Rule 510 replaces the version that was adopted on November 1, 2006 (74 FR 57612).
Regulation VI—Emergency Episodes				
Rule 600	Emergency Episodes	July 13, 1988	March 18, 1999, 64 FR 13351.	Submitted on January 4, 1990.
Appendices to Maricopa County Air Pollution Control Rules and Regulations				
Appendix C	Fugitive Dust Test Methods	March 26, 2008	December 15, 2010, 75 FR 78167.	Cited in Rules 310 and 310.01. Submitted on July 10, 2008.
Appendix F	Soil Designations	April 7, 2004	August 21, 2007, 72 FR 46564.	Cited in Rule 310. Submitted on October 7, 2005.

† Vacated by the U.S. Court of Appeals for the Ninth Circuit in *Delaney* v. *EPA,* 898 F.2d 687 (9th Cir. 1990). Restored by document published January 29, 1991.

* * * * *

■ 4. Revise § 52.144 to read as follows:

§ 52.144 Significant deterioration of air quality.

(a) The requirements of sections 160 through 165 of the Clean Act are not met, since the plan as it applies to stationary sources under the jurisdiction of the Pima County Health Department, and stationary sources locating on any Indian reservation lands, and any other area of Indian country where the EPA or an Indian tribe has demonstrated that a tribe has jurisdiction, located within the State of Arizona, does not include approvable procedures for preventing the significant deterioration of air quality.

(b) Regulation for preventing significant deterioration of air quality. The provisions of § 52.21 except paragraph (a)(1) of this section are hereby incorporated and made a part of the applicable State plan for the State of Arizona for those portions applicable to the Pima County Health Department, and to any Indian reservation lands, and any other area of Indian country where the EPA or an Indian tribe has demonstrated that a tribe has jurisdiction, located within the State of Arizona.

(c) The requirements of sections 160 through 165 of the Clean Air Act are met as they apply to stationary sources under the jurisdiction of the Arizona Department of Environmental Quality (ADEQ) and the Maricopa County Air Quality Department (MCAQD), except with respect to emissions of greenhouse gases (GHGs) (as defined in § 52.21(b)(49)(i)). Therefore, the provisions of § 52.21, except paragraph (a)(1) of this section, for GHGs are hereby made a part of the plan for stationary sources under the jurisdiction of the ADEQ and the MCAQD as it applies to the stationary sources described in § 52.21(b)(49)(iv).

■ 5. In § 52.145, revise paragraph (b) to read as follows:

§ 52.145 Visibility protection.

* * * * *

(b) Regulations for visibility new source review. The provisions of § 52.28 are hereby incorporated and made part of the applicable plan for the State of

Arizona only for those stationary sources under the permitting jurisdiction of the Pima County Department of Environmental Quality. The provisions of § 52.28 also remain the applicable plan for any Indian reservation lands, and any other area of Indian country where the EPA or an Indian tribe has demonstrated that a tribe has jurisdiction, located within the State of Arizona.

* * * * *

[FR Doc. 2022–02773 Filed 2–14–22; 8:45 am]

BILLING CODE 6560–50–P

DEPARTMENT OF THE INTERIOR

Office of the Secretary

43 CFR Part 2

[DOI–2021–0014; 223D0102DM, DS65100000, DLSN00000, DX.65103]

RIN 1090–AB15

Privacy Act Regulations; Exemption for the Insider Threat Program

AGENCY: Office of the Secretary, Interior.

ACTION: Final rule.

SUMMARY: The Department of the Interior (DOI) is issuing a final rule to amend its regulations to exempt certain records in the INTERIOR/DOI–50, Insider Threat Program, system of records from one or more provisions of the Privacy Act of 1974 because of criminal, civil, and administrative law enforcement requirements.

DATES: The final rule is effective February 15, 2022.

FOR FURTHER INFORMATION CONTACT: Teri Barnett, Departmental Privacy Officer, U.S. Department of the Interior, 1849 C Street NW, Room 7112, Washington, DC 20240, *DOI_Privacy@ios.doi.gov* or (202) 208–1605.

SUPPLEMENTARY INFORMATION:

Background

DOI published a notice of proposed rulemaking (NPRM) in the **Federal Register** at 86 FR 51645 (September 16, 2021) proposing to exempt portions of the INTERIOR/DOI–50, Insider Threat Program, system of records from certain provisions of the Privacy Act pursuant to 5 U.S.C. 552a(k)(1) and (k)(5) due to criminal, civil, and administrative law enforcement requirements. DOI published a system of records notice (SORN) for INTERIOR/DOI–50, Insider Threat Program, in the **Federal Register** at 86 FR 48753 (August 31, 2021). Comments were invited on both the INTERIOR/DOI–50, Insider Threat Program, SORN and NPRM. DOI received no comments on the SORN and six comments on the NPRM that were not relevant or did not result in a change to the rulemaking. The rulemaking will be implemented as proposed with a correction to the redesignated paragraph (e).

DOI previously published a final rule for INTERIOR/DOI–46, Physical Security Access Files, in the **Federal Register** at 86 FR 49927 (September 7, 2021) to add new and redesignated paragraphs for DOI Privacy Act exemptions at 43 CFR 2.254. In that rulemaking, a new paragraph (b) was reserved for exemptions claimed under 5 U.S.C. 552a(k)(1) as indicated in the published NPRM for the INTERIOR/DOI–50, Insider Threat Program, system of records. Paragraph (c) for investigatory records exempt under 5 U.S.C. 552a(k)(5) was redesignated to paragraph (e) to allow for a new paragraph (d) for exemptions claimed under 5 U.S.C. 552(k)(3) related to records maintained in connection with providing protective services.

The NPRM for the INTERIOR/DOI–50, Insider Threat Program, system of records described the new reserved paragraph (b) and new redesignated paragraph (e) for the proposed exemptions claimed under 5 U.S.C. 552a(k)(1) and (k)(5). However, the proposed redesignation of paragraph (e) was inadvertently changed during the publication process for the NPRM, which resulted in an incorrect reference to paragraph (c) for investigatory records exempt under 5 U.S.C. 552a(k)(5). This final rule corrects the redesignation of paragraph (e) and addresses a formatting error that occurred during publication of the final rule for INTERIOR/DOI–46, Physical Security Access Files, that resulted in the erroneous addition of a paragraph (f) instead of the appropriate reference to subsection (f) of the Privacy Act.

Procedural Requirements

1. Regulatory Planning and Review (E.O. 12866 and E.O. 13563)

Executive Order 12866 provides that the Office of Information and Regulatory Affairs in the Office of Management and Budget will review all significant rules. The Office of Information and Regulatory Affairs has determined that this rule is not significant.

Executive Order 13563 reaffirms the principles of Executive Order 12866 while calling for improvements in the nation's regulatory system to promote predictability, to reduce uncertainty, and to use the best, most innovative, and least burdensome tools for achieving regulatory ends. The executive order directs agencies to consider regulatory approaches that reduce burdens and maintain flexibility and freedom of choice for the public where these approaches are relevant, feasible, and consistent with regulatory objectives. Executive Order 13563 emphasizes further that regulations must be based on the best available science and that the rulemaking process must allow for public participation and an open exchange of ideas. We have developed this rule in a manner consistent with these requirements.

2. Regulatory Flexibility Act

The Department of the Interior certifies that this document will not have a significant economic effect on a substantial number of small entities under the Regulatory Flexibility Act (5 U.S.C. 601, *et seq.*). This rule does not impose a requirement for small businesses to report or keep records on any of the requirements contained in this rule. The exemptions to the Privacy Act apply to individuals, and individuals are not covered entities under the Regulatory Flexibility Act.

3. Small Business Regulatory Enforcement Fairness Act (SBREFA)

This rule is not a major rule under 5 U.S.C. 804(2), the Small Business Regulatory Enforcement Fairness Act. This rule:

(a) Does not have an annual effect on the economy of $100 million or more.

(b) Will not cause a major increase in costs or prices for consumers, individual industries, Federal, State, or local government agencies, or geographic regions.

(c) Does not have significant adverse effects on competition, employment, investment, productivity, innovation, or the ability of United States-based enterprises to compete with foreign-based enterprises.

4. Unfunded Mandates Reform Act

This rule does not impose an unfunded mandate on State, local, or tribal governments in the aggregate, or on the private sector, of more than $100 million per year. The rule does not have a significant or unique effect on State, local, or tribal governments or the private sector. This rule makes only minor changes to 43 CFR part 2. A statement containing the information required by the Unfunded Mandates Reform Act (2 U.S.C. 1531 *et seq.*) is not required.

5. Takings (E.O. 12630)

In accordance with Executive Order 12630, the rule does not have significant takings implications. This rule makes

only minor changes to 43 CFR part 2. A takings implication assessment is not required.

6. Federalism (E.O. 13132)

In accordance with Executive Order 13132, this rule does not have any federalism implications to warrant the preparation of a Federalism Assessment. The rule is not associated with, nor will it have substantial direct effects on the States, on the relationship between the national government and the States, or on the distribution of power and responsibilities among the various levels of government. A Federalism Assessment is not required.

7. Civil Justice Reform (E.O. 12988)

This rule complies with the requirements of Executive Order 12988. Specifically, this rule:

(a) Does not unduly burden the judicial system.

(b) Meets the criteria of section 3(a) requiring that all regulations be reviewed to eliminate errors and ambiguity and be written to minimize litigation; and

(c) Meets the criteria of section 3(b)(2) requiring that all regulations be written in clear language and contain clear legal standards.

8. Consultation With Indian Tribes (E.O. 13175)

In accordance with Executive Order 13175, the Department of the Interior has evaluated this rule and determined that it would have no substantial effects on federally recognized Indian Tribes.

9. Paperwork Reduction Act

This rule does not require an information collection from 10 or more parties and a submission under the Paperwork Reduction Act is not required.

10. National Environmental Policy Act

This rule does not constitute a major Federal Action significantly affecting the quality for the human environment. A detailed statement under the National Environmental Policy Act of 1969 (NEPA) is not required because the rule is covered by a categorical exclusion. We have determined the rule is categorically excluded under 43 CFR 46.210(i) because it is administrative, legal, and technical in nature. We also have determined the rule does not involve any of the extraordinary circumstances listed in 43 CFR 46.215 that would require further analysis under NEPA.

11. Effects on Energy Supply (E.O. 13211)

This rule is not a significant energy action under the definition in Executive Order 13211. A Statement of Energy Effects is not required.

12. Clarity of This Regulation

We are required by Executive Order 12866 and 12988, the Plain Writing Act of 2010 (Pub. L. 111–274), and the Presidential Memorandum of June 1, 1998, to write all rules in plain language. This means each rule we publish must:

—Be logically organized;
—Use the active voice to address readers directly;
—Use clear language rather than jargon;
—Be divided into short sections and sentences; and
—Use lists and table wherever possible.

List of Subjects in 43 CFR Part 2

Administrative practice and procedure, Confidential information, Courts, Freedom of Information Act, Privacy Act.

For the reasons stated in the preamble, the Department of the Interior amends 43 CFR part 2 as follows:

PART 2—FREEDOM OF INFORMATION ACT; RECORDS AND TESTIMONY

■ 1. The authority citation for part 2 continues to read as follows:

Authority: 5 U.S.C. 301, 552, 552a, 553; 31 U.S.C. 3717; 43 U.S.C. 1460, 1461.

■ 2. Amend § 2.254 by adding paragraph (b), revising paragraph (e) introductory text, and adding paragraph (e)(6) to read as follows:

§ 2.254 Exemptions.

* * * * *

(b) *Classified records exempt under 5 U.S.C. 552a(k)(1).* Pursuant to 5 U.S.C. 552a(k)(1), the following systems of records have been exempted from paragraphs (c)(3), (d), (e)(1), (e)(4)(G), (H), and (I), and (f) of 5 U.S.C. 552a and the provisions of the regulations in this subpart implementing these paragraphs:

(1) INTERIOR/DOI–50, Insider Threat Program.

(2) [Reserved]

* * * * *

(e) *Investigatory records exempt under 5 U.S.C. 552a(k)(5).* Pursuant to 5 U.S.C. 552a(k)(5), the following systems of records have been exempted from paragraphs (c)(3), (d), (e)(1), (e)(4)(G), (H), and (I), and (f) of 5 U.S.C. 552a and the provisions of the regulations in this subpart implementing these paragraphs:

* * * * *

(6) INTERIOR/DOI–50, Insider Threat Program.

Teri Barnett,

Departmental Privacy Officer, Department of the Interior.

[FR Doc. 2022–03135 Filed 2–14–22; 8:45 am]

BILLING CODE 4334–60–P

NATIONAL FOUNDATION ON THE ARTS AND HUMANITIES

National Endowment for the Humanities

45 CFR Part 1167

RIN 3136–AA44

Testimony and Production of Records

AGENCY: National Endowment for the Humanities; National Foundation on the Arts and the Humanities.

ACTION: Final rule.

SUMMARY: The National Endowment for the Humanities (NEH) is adopting as final its proposed regulations to be followed when an NEH employee receives a demand or request to provide testimony or produce records in a legal proceeding. These procedures are designed to promote economy and efficiency in NEH's programs and operations, to minimize the possibility of involving NEH in controversial issues not related to its functions, to maintain the impartiality of NEH among private litigants, and to protect sensitive, confidential information and the deliberative process.

DATES: This final rule is effective on February 15, 2022.

FOR FURTHER INFORMATION CONTACT: Elizabeth Voyatzis, Deputy General Counsel, Office of the General Counsel, National Endowment for the Humanities, 400 7th Street SW, Room 4060, Washington, DC 20506; (202) 606–8322; *gencounsel@neh.gov.*

SUPPLEMENTARY INFORMATION:

Background

On January 4, 2022, NEH published in the **Federal Register** a notice of proposed rulemaking (87 FR 210), requesting public comment on a proposed rule regarding testimony and production of records. The agency received one comment about the proposed rule, which did not raise a point relevant to the consideration of the proposed rule. Accordingly, NEH is adopting the rule as proposed.

The Federal courts have upheld the authority of a Federal agency to establish procedures governing the production of records and testimony by

personnel in legal proceedings in which the agency is not a party. *United States ex rel. Touhy* v. *Ragen,* 340 U.S. 462 (1951). This rule establishes policies and procedures that the agency will follow when, in a legal proceeding, a current or former NEH employee receives a demand or request to testify as to facts or events that relate to his or her official duties or the functions of NEH or to produce official records and information.

This rule relates to testimony and the production of records only in connection with legal proceedings to which the United States is not a party. It does not apply to requests under the Freedom of Information Act, 5 U.S.C. 552, or the Privacy Act of 1974, 5 U.S.C. 552a; Congressional demands or requests for testimony or records; or legal proceedings to which the United States is a party.

Executive Order 12866, Regulatory Planning and Review, and Executive Order 13563, Improving Regulation and Regulatory Review

This action is not a significant regulatory action and was therefore not submitted to the Office of Management and Budget for review.

Executive Order 13132, Federalism

This rulemaking does not have federalism implications. It will not have substantial direct effects on the states, on the relationship between the national government and the states, or on the distribution of power and responsibilities among the various levels of government.

Executive Order 12988, Civil Justice Reform

This rulemaking meets the applicable standards set forth in section 3(a) and 3(b)(2) of Executive Order 12988. Specifically, this rulemaking is written in clear language designed to help reduce litigation.

Executive Order 13175, Indian Tribal Governments

Under the criteria in Executive Order 13175, NEH evaluated this rulemaking and determined that it will not have any potential effects on Federally recognized Indian Tribes.

Executive Order 12630, Takings

Under the criteria in Executive Order 12630, this rulemaking does not have significant takings implications. Therefore, a takings implication assessment is not required.

Regulatory Flexibility Act of 1980

This rulemaking will not have a significant adverse impact on a substantial number of small entities, including small businesses, small governmental jurisdictions, or certain small not-for-profit organizations.

Paperwork Reduction Act of 1995

This rulemaking does not impose an information collection burden under the Paperwork Reduction Act. This action contains no provisions constituting a collection of information pursuant to the Paperwork Reduction Act.

Unfunded Mandates Reform Act of 1995

This rulemaking does not contain a Federal mandate that will result in the expenditure by State, local, and Tribal governments, in the aggregate, or by the private sector of $100 million or more in any one year.

National Environmental Policy Act of 1969

This rulemaking will not have a significant effect on the human environment.

Small Business Regulatory Enforcement Fairness Act of 1996

This rulemaking will not be a major rule as defined in section 804 of the Small Business Regulatory Enforcement Fairness Act of 1996. This rulemaking will not result in an annual effect on the economy of $100 million or more, a major increase in costs or prices, significant adverse effects on competition, employment, investment, productivity, innovation, or the ability of United States-based companies to compete with foreign-based companies in domestic and export markets.

E-Government Act of 2002

All information about NEH required to be published in the **Federal Register** may be accessed at *www.neh.gov.* The website *www.regulations.gov* contains electronic dockets for NEH's rulemakings under the Administrative Procedure Act of 1946.

Plain Writing Act of 2010

To ensure this proposed rule speaks in plain and clear language so that the public can use and understand it, NEH modeled the language of the proposed rule on the Federal Plain Language Guidelines.

List of Subjects in 45 CFR Part 1167

Administrative practice and procedure.

■ For the reasons set forth in the preamble, the National Endowment for the Humanities amends 45 CFR chapter XI by adding part 1167 to subchapter D to read as follows:

PART 1167—TESTIMONY AND PRODUCTION OF RECORDS

Subchapter D

Sec.

1167.1 Purpose.
1167.2 Applicability.
1167.3 Definitions.
1167.4 Testimony and production of official records and information.
1167.5 Procedure when demand is made.
1167.6 Office of Inspector General employees.

Authority: 5 U.S.C. 301.

§ 1167.1 Purpose.

(a) This part sets forth policies and procedures to be followed when an employee of the National Endowment for the Humanities (NEH) receives a demand to provide testimony or produce official records and information in connection with a legal proceeding in which the United States is not a party.

(b) The provisions of this part are intended to promote economy and efficiency in NEH's programs and operations; minimize the possibility of involving NEH in controversial issues not related to its functions; maintain the impartiality of NEH among private litigants; and protect sensitive, confidential information and the agency's internal deliberative process.

(c) This part does not waive the sovereign immunity of the United States.

(d) This part does not create any right or benefit, substantive or procedural, enforceable at law by a party against the United States.

(e) This regulation is not intended to conflict with 5 U.S.C. 2302(b)(13).

§ 1167.2 Applicability.

This part applies to demands and requests for factual or expert testimony or for official records or information in legal proceedings, except that it does not apply to:

(a) Demands upon or requests for an NEH employee to testify as to facts or events that are in no way related to his or her official duties or to the functions of NEH;

(b) Demands upon or requests for a former NEH employee to testify as to matters in which the former employee was not directly or materially involved while at NEH;

(c) Requests for the release of records under the Freedom of Information Act, 5 U.S.C. 552, or the Privacy Act of 1974, 5 U.S.C. 552a;

(d) Congressional demands and requests for testimony or records; and

(e) Legal proceedings to which the United States is a party.

§ 1167.3 Definitions.

The following definitions apply to this part:

Agency or *NEH* means the National Endowment for the Humanities.

Demand means a subpoena, order, or other demand of a court or other competent authority, issued in a legal proceeding, for the production of official records and information or for the testimony of an NEH employee.

General Counsel means the General Counsel of the agency, or any person to whom the General Counsel has delegated authority under this part.

Legal proceeding means any proceeding before a court of law, administrative board or commission, hearing officer, or other body conducting a legal or administrative proceeding.

NEH employee or *employee* means any present or former officer or employee of NEH; any other individual hired through contractual agreement by or on behalf of NEH, or who has performed or is performing services under such an agreement for NEH; and any individual who served or is serving on an NEH advisory committee.

Official records and information means all documents and material in the custody and control of NEH; relating to information in the custody and control of NEH; or acquired by an NEH employee in the performance of his or her official duties or because of his or her official status, while the individual was employed by or on behalf of the NEH.

Request means any request in connection with an ongoing or threatened legal proceeding, by whatever method, for the production of official records and information or for testimony, other than a demand.

Testimony means any written or oral statement by a witness, and includes depositions, answers to interrogatories, affidavits, declarations, and statements at a hearing or trial.

§ 1167.4 Testimony and production of official records and information.

(a) No employee may produce official records and information or provide any testimony in response to a demand or request unless authorized to do so by the General Counsel in accordance with this part.

(b) The General Counsel, in his or her discretion, may grant an employee permission to testify or produce official records and information in response to a demand or request. In making this decision, the General Counsel shall consider whether:

(1) Allowing such testimony or production of records would be consistent with the purposes of this part;

(2) Allowing such testimony or production of records would be necessary to prevent a miscarriage of justice;

(3) Allowing such testimony or production of records would be in the best interest of NEH and the United States; or

(4) NEH has an interest in the outcome of the legal proceeding.

(c) If authorized to testify pursuant to this part, an employee may testify as to facts within his or her personal knowledge or produce official records and information, but, unless specifically authorized to do so by the General Counsel, shall not:

(1) Disclose confidential or privileged information;

(2) Testify as to matters regarding which the General Counsel determines that testimony would not be in the best interest of NEH or the United States;

(3) Produce official records and information regarding which the General Counsel determines that production would not be in the best interest of NEH or the United States; or

(4) Testify as an expert or opinion witness with regard to any matter arising out of the employee's official duties or the functions of NEH. (*See also* 5 CFR 2635.805.)

§ 1167.5 Procedure when demand is made.

(a) Whenever an employee is served with a demand to testify in his or her official capacity, or to produce official records and information, the employee shall notify the General Counsel immediately.

(b) The General Counsel shall review the demand and, in accordance with the provisions of § 1167.4, shall determine whether, or on what conditions, to authorize the employee to testify and/or produce official records and information.

(c) If a demand requires a response before the General Counsel has made the determination referred to in paragraph (b) of this section, the General Counsel shall provide the court or other competent authority with a copy of this part, inform the court or other competent authority that the demand is being reviewed, and seek a stay of the demand pending a final determination.

(d) If a court or other competent authority orders that an NEH employee comply with a demand notwithstanding a final decision by the General Counsel to the contrary, or at any other stage in the process, the General Counsel shall advise the employee on how to respond to such order and may arrange for legal representation of the employee.

§ 1167.6 Office of Inspector General employees.

Notwithstanding the requirements set forth in §§ 1167.1 through 1167.5, when an employee of the agency's Office of the Inspector General receives a demand or request to provide testimony or produce official records and information, the Inspector General or his or her designee shall be responsible for performing the functions assigned to the General Counsel under this part with respect to such demand or request.

Dated: February 9, 2022.

Samuel Roth,

Attorney-Advisor, National Endowment for the Humanities.

[FR Doc. 2022–03060 Filed 2–14–22; 8:45 am]

BILLING CODE 7536–01–P

NATIONAL FOUNDATION ON THE ARTS AND HUMANITIES

National Endowment for the Humanities

45 CFR Part 1173

RIN 3136–AA45

Indemnification of Employees

AGENCY: National Endowment for the Humanities, National Foundation on the Arts and the Humanities.

ACTION: Final rule.

SUMMARY: The National Endowment for the Humanities (NEH) is adopting as final its proposed policy that permits indemnification of NEH employees in appropriate circumstances, as determined by the Chairperson of NEH or the Chairperson's designee, for claims made against NEH employees as a result of actions taken by them in the scope of their employment.

DATES: This final rule is effective on February 15, 2022.

FOR FURTHER INFORMATION CONTACT: Elizabeth Voyatzis, Deputy General Counsel, Office of the General Counsel, National Endowment for the Humanities, 400 7th Street SW, Room 4060, Washington, DC 20506; (202) 606–8322; *gencounsel@neh.gov.*

SUPPLEMENTARY INFORMATION:

Background

On December 20, 2021, NEH published in the **Federal Register** a notice of proposed rulemaking (86 FR 71863), requesting public comment on a proposed rule regarding indemnification of NEH employees. The agency received

no comments. Accordingly, NEH is adopting the rule as proposed.

This policy permits, but does not require, NEH to indemnify an employee who suffers an adverse verdict, judgment, or other monetary award, provided that the act or omission giving rise to the award occurred within the scope of the employee's employment, and that such indemnification is in the interest of NEH, as determined by the Chairperson or the Chairperson's designee. The policy also permits, but does not require, NEH to settle a claim brought against an employee in his or her individual capacity, upon a similar determination by the Chairperson or the Chairperson's designee. This policy applies to actions pending against NEH employees as of the effective date and to actions commenced after that date.

Executive Order 12866, Regulatory Planning and Review, and Executive Order 13563, Improving Regulation and Regulatory Review

This action is not a significant regulatory action and was therefore not submitted to the Office of Management and Budget for review.

Executive Order 13132, Federalism

This rulemaking does not have federalism implications. It will not have substantial direct effects on the states, on the relationship between the National Government and the states, or on the distribution of power and responsibilities among the various levels of government.

Executive Order 12988, Civil Justice Reform

This rulemaking meets the applicable standards set forth in section 3(a) and 3(b)(2) of Executive Order 12988. Specifically, this rulemaking is written in clear language designed to help reduce litigation.

Executive Order 13175, Indian Tribal Governments

Under the criteria in Executive Order 13175, NEH evaluated this rulemaking and determined that it will not have any potential effects on Federally recognized Indian Tribes.

Executive Order 12630, Takings

Under the criteria in Executive Order 12630, this rulemaking does not have significant takings implications. Therefore, a takings implication assessment is not required.

Regulatory Flexibility Act of 1980

This rulemaking will not have a significant adverse impact on a substantial number of small entities, including small businesses, small governmental jurisdictions, or certain small not-for-profit organizations.

Paperwork Reduction Act of 1995

This rulemaking does not impose an information collection burden under the Paperwork Reduction Act. This action contains no provisions constituting a collection of information pursuant to the Paperwork Reduction Act.

Unfunded Mandates Reform Act of 1995

This rulemaking does not contain a Federal mandate that will result in the expenditure by State, local, and Tribal governments, in the aggregate, or by the private sector of $100 million or more in any one year.

National Environmental Policy Act of 1969

This rulemaking will not have a significant effect on the human environment.

Small Business Regulatory Enforcement Fairness Act of 1996

This rulemaking will not be a major rule as defined in section 804 of the Small Business Regulatory Enforcement Fairness Act of 1996. This rulemaking will not result in an annual effect on the economy of $100 million or more, a major increase in costs or prices, significant adverse effects on competition, employment, investment, productivity, innovation, or the ability of United States-based companies to compete with foreign-based companies in domestic and export markets.

E-Government Act of 2002

All information about NEH required to be published in the **Federal Register** may be accessed at *www.neh.gov.* The website *www.regulations.gov* contains electronic dockets for NEH's rulemakings under the Administrative Procedure Act of 1946.

Plain Writing Act of 2010

To ensure this proposed rule speaks in plain and clear language so that the public can use and understand it, NEH modeled the language of the proposed rule on the Federal Plain Language Guidelines.

List of Subjects in 45 CFR Part 1173

Administrative practice and procedure.

■ For the reasons set forth in the preamble, the National Endowment for the Humanities amends 45 CFR chapter XI subchapter D by adding part 1173 to read as follows:

PART 1173—INDEMNIFICATION OF EMPLOYEES

Sec.
1173.1 Policy on employee indemnification
1173.2 [Reserved]

Authority: 5 U.S.C. 301.

§ 1173.1 Policy on employee indemnification.

(a) This part explains when the National Endowment for the Humanities (NEH) will indemnify you, an employee or a former employee of NEH, against a verdict, judgment, or other monetary award that a court or other competent authority renders against you. When NEH indemnifies you against a verdict, judgment, or other monetary award, it means that NEH will pay the amounts that the court orders you to pay.

(b) This part also explains when NEH will settle a claim (also referred to as compromising a claim) that someone brings or threatens to bring against you in court or before another competent authority. It is only in exceptional circumstances that NEH will agree to settle a claim before a court or other competent authority has entered a verdict, judgment, or monetary award against you.

(c) In order for NEH to indemnify you or settle a claim:

(1) The verdict, judgment, or monetary award to be paid or the claim to be settled must relate to something that you did (or failed to do) within the scope of your employment with NEH; and

(2) The Chairperson of NEH or someone the Chairperson designates (the Agency Official) must determine, as a matter of discretion, that indemnifying you or settling the claim would be in the interest of NEH.

(d) If you become aware that someone has made or may make a claim against you personally as a result of something that you did (or failed to do) within the scope of your employment, you must immediately notify the Office of the General Counsel.

(e) To request that NEH indemnify you or settle a claim against you, you must submit a written request to the Office of the General Counsel. You must include a copy of the verdict, judgment, monetary award, or settlement proposal, as appropriate. The Office of the General Counsel may consult about the matter with your supervisor, other agency employees, and the Department of Justice.

(f) The Agency Official may waive the requirements of paragraphs (d) and (e) of this section if it would be in the interest of NEH to do so.

(g) If the Agency Official determines that NEH will indemnify you or settle a

claim on your behalf, NEH's commitment will be subject to the availability of appropriated funds. The Agency Official may impose other conditions or limitations on the determination at his or her discretion.

(h) If the Chairperson requests indemnification or settlement of a claim, the General Counsel will perform the functions assigned to the Chairperson under this section with respect to that request.

§ 1173.2 [Reserved]

Dated: February 9, 2022.

Samuel Roth,

Attorney-Advisor, National Endowment for the Humanities.

[FR Doc. 2022–03058 Filed 2–14–22; 8:45 am]

BILLING CODE 7536–01–P

DEPARTMENT OF COMMERCE

National Oceanic and Atmospheric Administration

50 CFR Part 635

[Docket No. 180117042–8884–02; RTID 0648–XB796]

Atlantic Highly Migratory Species; Atlantic Bluefin Tuna Fisheries

AGENCY: National Marine Fisheries Service (NMFS), National Oceanic and Atmospheric Administration (NOAA), Commerce.

ACTION: Temporary rule; closure of the General category January through March fishery for 2022.

SUMMARY: NMFS closes the General category fishery for large medium and giant (*i.e.,* measuring 73 inches (185 cm) curved fork length or greater) Atlantic bluefin tuna (BFT) for the January through March subquota time period. This action applies to Atlantic Tunas General category (commercial) permitted vessels and HMS Charter/Headboat permitted vessels with a commercial sale endorsement when fishing commercially for BFT.

DATES: Effective 11:30 p.m., local time, February 11, 2022, through May 31, 2022.

FOR FURTHER INFORMATION CONTACT: Larry Redd, Jr., *larry.redd@noaa.gov,* 301–427–8503, Nicholas Velseboer, *nicholas.velsboer@noaa.gov,* 978–281–9260, or Thomas Warren, *thomas.warren@noaa.gov,* 978–281–9347.

SUPPLEMENTARY INFORMATION: Atlantic HMS fisheries, including BFT fisheries, are managed under the authority of the Atlantic Tunas Convention Act (ATCA; 16 U.S.C. 971 *et seq.*) and the Magnuson-Stevens Fishery Conservation and Management Act (Magnuson-Stevens Act; 16 U.S.C. 1801 *et seq.*). The 2006 Consolidated Atlantic HMS Fishery Management Plan (FMP) and its amendments are implemented by regulations at 50 CFR part 635. Section 635.27 divides the U.S. BFT quota recommended by the International Commission for the Conservation of Atlantic Tunas (ICCAT) and as implemented by the United States among the various domestic fishing categories, per the allocations established in the 2006 Consolidated HMS FMP and its amendments. NMFS is required under the Magnuson-Stevens Act to provide U.S. fishing vessels with a reasonable opportunity to harvest quotas under relevant international fishery agreements such as the ICCAT Convention, which is implemented domestically pursuant to ATCA.

Under § 635.28(a)(1), NMFS files a closure notice with the Office of the Federal Register for publication when a BFT quota (or subquota) is reached or is projected to be reached. Retaining, possessing, or landing BFT under that quota category is prohibited on and after the effective date and time of a closure notice for that category, for the remainder of the fishing year, until the opening of the subsequent quota period or until such date as specified.

The 2022 baseline quota for the General category is 555.7 mt. The General category baseline subquota for the January through March time period is 29.5 mt. As a result of two adjustments, the adjusted subquota for the January through March time period is 75 mt (86 FR 72857, December 23, 2021; 87 FR 5737, February 2, 2022).

Closure of the January Through March 2022 General Category Fishery

As of February 10, 2022, reported landings for the General category January through March subquota time period total approximately 63.1 mt. Based on these landings data, as well as average catch rates and anticipated fishing conditions, NMFS projects the adjusted January through March 2022 subquota of 75 mt will be reached shortly. Therefore, retaining, possessing, or landing large medium or giant (*i.e.,* measuring 73 inches (185 cm) curved fork length or greater) BFT by persons aboard vessels permitted in the Atlantic Tunas General category and HMS Charter/Headboat permitted vessels (while fishing commercially) must cease at 11:30 p.m. local time on February 11, 2022. The General category will automatically reopen June 1, 2022, for the June through August 2022 subquota time period. This action applies to Atlantic Tunas General category (commercial) permitted vessels and HMS Charter/Headboat permitted vessels with a commercial sale endorsement when fishing commercially for BFT and is taken consistent with the regulations at § 635.28(a)(1). The intent of this closure is to prevent overharvest of the available January through March subquota.

Fishermen aboard General category permitted vessels and HMS Charter/Headboat permitted vessels may catch-and-release and tag and release BFT of all sizes, subject to the requirements of the catch-and-release and tag-and-release programs at § 635.26. All BFT that are released must be handled in a manner that will maximize their survival, and without removing the fish from the water, consistent with requirements at § 635.21(a)(1). For additional information on safe handling, see the ''Careful Catch and Release'' brochure available at *https://www.fisheries.noaa.gov/resource/outreach-and-education/careful-catch-and-release-brochure/.*

Monitoring and Reporting

NMFS will continue to monitor the BFT fisheries closely. Dealers are required to submit landing reports within 24 hours of a dealer receiving BFT. Late reporting by dealers compromises NMFS' ability to timely implement actions such as quota and retention limit adjustment, as well as closures, and may result in enforcement actions. Additionally, and separate from the dealer reporting requirement, General and HMS Charter/Headboat category vessel owners are required to report the catch of all BFT retained or discarded dead within 24 hours of the landing(s) or end of each trip, by accessing *hmspermits.noaa.gov,* using the HMS Catch Reporting app, or calling (888) 872–8862 (Monday through Friday from 8 a.m. until 4:30 p.m.).

Classification

NMFS issues this action pursuant to section 305(d) of the Magnuson-Stevens Act and regulations at 50 CFR part 635 and is exempt from review under Executive Order 12866.

The Assistant Administrator for NMFS finds that it is impracticable and contrary to the public interest to provide prior notice of, and an opportunity for public comment on, this action for the following reasons:

The regulations implementing the 2006 Consolidated HMS FMP and its amendments provide for inseason adjustments and fishery closures to

respond to the unpredictable nature of BFT availability on the fishing grounds, the migratory nature of this species, and the regional variations in the BFT fishery. This fishery is currently underway and delaying this action would be contrary to the public interest as it could result in BFT landings exceeding the General category adjusted January through March 2022 subquota, which could result in the need to reduce quota for the General category later in the year and thus could affect later fishing opportunities. Therefore, the AA finds good cause under 5 U.S.C. 553(b)(B) to waive prior notice and the opportunity for public comment. For all of the above reasons, there is good cause under 5 U.S.C. 553(d) to waive the 30-day delay in effectiveness.

Authority: 16 U.S.C. 971 *et seq.* and 1801 *et seq.*

Dated: February 10, 2022.

Ngagne Jafnar Gueye,

Acting Director, Office of Sustainable Fisheries, National Marine Fisheries Service.

[FR Doc. 2022–03236 Filed 2–10–22; 4:15 pm]

BILLING CODE 3510–22–P

DEPARTMENT OF COMMERCE

National Oceanic and Atmospheric Administration

50 CFR Part 679

[Docket No. 210210–0018; RTID 0648–XB755]

Fisheries of the Exclusive Economic Zone Off Alaska; Pacific Cod by Vessels Using Pot Gear in the Western Regulatory Area of the Gulf of Alaska

AGENCY: National Marine Fisheries Service (NMFS), National Oceanic and Atmospheric Administration (NOAA), Commerce.

ACTION: Temporary rule; closure.

SUMMARY: NMFS is prohibiting directed fishing for Pacific cod by vessels using pot gear in the Western Regulatory Area of the Gulf of Alaska (GOA). This action is necessary to prevent exceeding the A season allowance of the 2022 total allowable catch (TAC) of Pacific cod by vessels using pot gear in the Western Regulatory Area of the GOA.

DATES: Effective 1200 hrs, Alaska local time (A.l.t.), February 11, 2022, through 1200 hrs, A.l.t., June 10, 2022.

FOR FURTHER INFORMATION CONTACT: Krista Milani, 907–581–2062.

SUPPLEMENTARY INFORMATION: NMFS manages the groundfish fishery in the GOA exclusive economic zone according to the Fishery Management Plan for Groundfish of the Gulf of Alaska (FMP) prepared by the North Pacific Fishery Management Council under authority of the Magnuson-Stevens Fishery Conservation and Management Act. Regulations governing fishing by U.S. vessels in accordance with the FMP appear at subpart H of 50 CFR part 600 and 50 CFR part 679.

The A season allowance of the 2022 Pacific cod TAC apportioned to vessels using pot gear in the Western Regulatory Area of the GOA is 1,330 metric tons (mt) as established by the final 2021 and 2022 harvest specifications for groundfish in the GOA (86 FR 10184, February 19, 2021) and inseason adjustment (86 FR 74384, December 30, 2021).

In accordance with § 679.20(d)(1)(i), the Regional Administrator has determined that the A season allowance of the 2022 Pacific cod TAC apportioned to vessels using pot gear in the Western Regulatory Area of the GOA will soon be reached. Therefore, the Regional Administrator is establishing a directed fishing allowance of 1,330 mt and is setting aside the remaining 0 mt as bycatch to support other anticipated groundfish fisheries. In accordance with § 679.20(d)(1)(iii), the Regional Administrator finds that this directed fishing allowance has been reached. Consequently, NMFS is prohibiting directed fishing for Pacific cod by vessels using pot gear in the Western Regulatory Area of the GOA.

While this closure is effective the maximum retainable amounts at § 679.20(e) and (f) apply at any time during a trip.

Classification

NMFS issues this action pursuant to section 305(d) of the Magnuson-Stevens Act. This action is required by 50 CFR part 679, which was issued pursuant to section 304(b), and is exempt from review under Executive Order 12866.

Pursuant to 5 U.S.C. 553(b)(B), there is good cause to waive prior notice and an opportunity for public comment on this action, as notice and comment would be impracticable and contrary to the public interest, as it would prevent NMFS from responding to the most recent fisheries data in a timely fashion and would delay the closure of Pacific cod by vessels using pot gear in the Western Regulatory Area of the GOA. NMFS was unable to publish a notice providing time for public comment because the most recent, relevant data only became available as of February 9, 2022.

The Assistant Administrator for Fisheries, NOAA also finds good cause to waive the 30-day delay in the effective date of this action under 5 U.S.C. 553(d)(3). This finding is based upon the reasons provided above for waiver of prior notice and opportunity for public comment.

Authority: 16 U.S.C. 1801 *et seq.*

Dated: February 10, 2022.

Ngagne Jafnar Gueye,

Acting Director, Office of Sustainable Fisheries, National Marine Fisheries Service.

[FR Doc. 2022–03221 Filed 2–10–22; 4:15 pm]

BILLING CODE 3510–22–P

Proposed Rules

Federal Register
Vol. 87, No. 31
Tuesday, February 15, 2022

This section of the FEDERAL REGISTER contains notices to the public of the proposed issuance of rules and regulations. The purpose of these notices is to give interested persons an opportunity to participate in the rule making prior to the adoption of the final rules.

DEPARTMENT OF TRANSPORTATION

Federal Aviation Administration

14 CFR Part 39

[Docket No. FAA–2022–0094; Project Identifier AD–2021–01251–E]

RIN 2120–AA64

Airworthiness Directives; CFM International, S.A. Turbofan Engines

AGENCY: Federal Aviation Administration (FAA), DOT.

ACTION: Notice of proposed rulemaking (NPRM).

SUMMARY: The FAA proposes to adopt a new airworthiness directive (AD) for all CFM International, S.A. (CFM) LEAP–1B21, LEAP–1B23, LEAP–1B25, LEAP–1B27, LEAP–1B28, LEAP–1B28B1, LEAP–1B28B2, LEAP–1B28B2C, LEAP–1B28B3, LEAP–1B28BBJ1, and LEAP–1B28BBJ2 model turbofan engines. This proposed AD was prompted by the detection of melt-related freckles in the billet, which may reduce the life of certain compressor rotor stages 6–10 spools, high pressure turbine (HPT) rotor mid seals, HPT rotor stage 2 disks, low pressure turbine (LPT) stage 2 disks, and LPT stage 3 disks. This proposed AD would require revising the airworthiness limitations section (ALS) of the applicable CFM LEAP–1B Engine Shop Manual (ESM), and the operator's existing approved continuous airworthiness maintenance program (CAMP) to incorporate reduced life limits for these parts. The FAA is proposing this AD to address the unsafe condition on these products.

DATES: The FAA must receive comments on this proposed AD by April 1, 2022.

ADDRESSES: You may send comments, using the procedures found in 14 CFR 11.43 and 11.45, by any of the following methods:

- *Federal eRulemaking Portal:* Go to *https://www.regulations.gov.* Follow the instructions for submitting comments.
- *Fax:* (202) 493–2251.
- *Mail:* U.S. Department of Transportation, Docket Operations, M–30, West Building Ground Floor, Room W12–140, 1200 New Jersey Avenue SE, Washington, DC 20590.
- *Hand Delivery:* Deliver to Mail address above between 9 a.m. and 5 p.m., Monday through Friday, except Federal holidays.

For service information identified in this NPRM, contact CFM International, S.A., Aviation Operations Center, 1 Neumann Way, M/D Room 285, Cincinnati, OH 45125; phone: (877) 432–3272; email: *fleetsupport@ge.com*. You may view this service information at the FAA, Airworthiness Products Section, Operational Safety Branch, 1200 District Avenue, Burlington, MA 01803. For information on the availability of this material at the FAA, call (817) 222–5110.

Examining the AD Docket

You may examine the AD docket at *https://www.regulations.gov* by searching for and locating Docket No. FAA–2022–0094; or in person at Docket Operations between 9 a.m. and 5 p.m., Monday through Friday, except Federal holidays. The AD docket contains this NPRM, any comments received, and other information. The street address for Docket Operations is listed above.

FOR FURTHER INFORMATION CONTACT: Mehdi Lamnyi, Aviation Safety Engineer, ECO Branch, FAA, 1200 District Avenue, Burlington, MA 01803; phone: (781) 238–7743; email: *Mehdi.Lamnyi@faa.gov*.

SUPPLEMENTARY INFORMATION:

Comments Invited

The FAA invites you to send any written relevant data, views, or arguments about this proposal. Send your comments to an address listed under **ADDRESSES**. Include ''Docket No. FAA–2022–0094; Project Identifier AD–2021–01251–E'' at the beginning of your comments. The most helpful comments reference a specific portion of the proposal, explain the reason for any recommended change, and include supporting data. The FAA will consider all comments received by the closing date and may amend this proposal because of those comments.

Except for Confidential Business Information (CBI) as described in the following paragraph, and other information as described in 14 CFR 11.35, the FAA will post all comments received, without change, to *https://www.regulations.gov,* including any personal information you provide. The agency will also post a report summarizing each substantive verbal contact received about this NPRM.

Confidential Business Information

CBI is commercial or financial information that is both customarily and actually treated as private by its owner. Under the Freedom of Information Act (FOIA) (5 U.S.C. 552), CBI is exempt from public disclosure. If your comments responsive to this NPRM contain commercial or financial information that is customarily treated as private, that you actually treat as private, and that is relevant or responsive to this NPRM, it is important that you clearly designate the submitted comments as CBI. Please mark each page of your submission containing CBI as ''PROPIN.'' The FAA will treat such marked submissions as confidential under the FOIA, and they will not be placed in the public docket of this NPRM. Submissions containing CBI should be sent to Mehdi Lamnyi, Aviation Safety Engineer, ECO Branch, FAA, 1200 District Avenue, Burlington, MA 01803. Any commentary that the FAA receives which is not specifically designated as CBI will be placed in the public docket for this rulemaking.

Background

The FAA was notified by the engine manufacturer of the detection of melt-related freckles in the billet, which may reduce the life of certain compressor rotor stages 6–10 spools, HPT rotor mid seals, HPT rotor stage 2 disks, LPT stage 2 disks, and LPT stage 3 disks (life-limited parts (LLPs)). The manufacturer's investigation determined that, as a result of such freckles forming in the billet, these LLPs may have undetected subsurface anomalies that developed during the manufacturing process, resulting in reduced material properties and a lower fatigue life capability. Reduced material properties may cause premature LLP fracture, which could result in uncontained debris release. As a result of its investigation, the manufacturer determined the need to reduce the life limits of these LLPs. To reflect these reduced life limits, the manufacturer revised the CFM ALS, Chapter 05 of

LEAP–1B ESM. Additionally, the manufacturer published service information that specifies procedures for the removal and replacement of these LLPs before reaching their new life limits. The FAA is proposing to require operators to update the ALS of the applicable CFM LEAP–1B ESM, with the reduced life limits for these LLPs.

This condition, if not addressed, could result in uncontained debris release, damage to the engine, and damage to the airplane.

FAA's Determination

The FAA is issuing this NPRM after determining that the unsafe condition described previously is likely to exist or develop on other products of the same type design.

Related Service Information Under 1 CFR Part 51

The FAA reviewed CFM High Pressure Compressor Rotor Life Limits LEAP–1B–05–11–02–01A–0B1B–C, Issue 009–00, dated July 26, 2021 (CFM LEAP–1B–05–11–02–01A–0B1B–C); CFM High Pressure Turbine Rotor Life Limits LEAP–1B–05–11–03–01A–0B1B–C, Issue 006–00, dated July 26, 2021 (CFM LEAP–1B–05–11–03–01A–0B1B–C); and CFM Low Pressure Turbine Rotor Life Limits LEAP–1B–05–11–04–01A–0B1B–C, Issue 006–00, dated June 1, 2021 (LEAP–1B–05–11–04–01A–0B1B–C). CFM LEAP–1B–05–11–02–01A–0B1B–C provides new high pressure compressor rotor life limits. CFM LEAP–1B–05–11–03–01A–0B1B–C provides new HPT rotor life limits. CFM LEAP–1B–05–11–04–01A–0B1B–C provides new LPT rotor life limits. This service information is reasonably available because the interested parties have access to it through their normal course of business or by the means identified in **ADDRESSES**.

Other Related Service Information

The FAA reviewed CFM Service Bulletin LEAP–1B–72–00–0342–01A–930A–D, Issue 002–00, dated July 26, 2021 (LEAP–1B–72–00–0342–01A–930A–D). LEAP–1B–72–00–0342–01A–930A–D specifies procedures for removing and replacing the LLPs, and provides new life limits for certain serial numbers of the LLPs.

Proposed AD Requirements in This NPRM

This proposed AD would require revising the ALS of the CFM LEAP–1B ESM, as applicable to each affected engine model, and the operator's existing approved CAMP to incorporate reduced life limits for certain LLPs.

Costs of Compliance

The FAA estimates that this AD, if adopted as proposed, would affect 378 engines installed on airplanes of U.S. registry.

The FAA estimates the following costs to comply with this proposed AD:

ESTIMATED COSTS

Action	Labor cost	Parts cost	Cost per product	Cost on U.S. operators
Revise ALS of Engine Manual and the operator's existing approved CAMP.	1 work-hour × $85 per hour = $85	$0	$85	$32,130

Authority for This Rulemaking

Title 49 of the United States Code specifies the FAA's authority to issue rules on aviation safety. Subtitle I, section 106, describes the authority of the FAA Administrator. Subtitle VII: Aviation Programs, describes in more detail the scope of the Agency's authority.

The FAA is issuing this rulemaking under the authority described in Subtitle VII, Part A, Subpart III, Section 44701: General requirements. Under that section, Congress charges the FAA with promoting safe flight of civil aircraft in air commerce by prescribing regulations for practices, methods, and procedures the Administrator finds necessary for safety in air commerce. This regulation is within the scope of that authority because it addresses an unsafe condition that is likely to exist or develop on products identified in this rulemaking action.

Regulatory Findings

The FAA determined that this proposed AD would not have federalism implications under Executive Order 13132. This proposed AD would not have a substantial direct effect on the States, on the relationship between the national government and the States, or on the distribution of power and responsibilities among the various levels of government.

For the reasons discussed above, I certify this proposed regulation:

(1) Is not a ''significant regulatory action'' under Executive Order 12866,

(2) Would not affect intrastate aviation in Alaska, and

(3) Would not have a significant economic impact, positive or negative, on a substantial number of small entities under the criteria of the Regulatory Flexibility Act.

List of Subjects in 14 CFR Part 39

Air transportation, Aircraft, Aviation safety, Incorporation by reference, Safety.

The Proposed Amendment

Accordingly, under the authority delegated to me by the Administrator, the FAA proposes to amend 14 CFR part 39 as follows:

PART 39—AIRWORTHINESS DIRECTIVES

■ 1. The authority citation for part 39 continues to read as follows:

Authority: 49 U.S.C. 106(g), 40113, 44701.

§ 39.13 Amended]

■ 2. The FAA amends § 39.13 by adding the following new airworthiness directive:

CFM International, S.A.: Docket No. FAA–2022–0094; Project Identifier AD–2021–01251–E.

(a) Comments Due Date

The FAA must receive comments on this airworthiness directive (AD) by April 1, 2022.

(b) Affected ADs

None.

(c) Applicability

This AD applies to CFM International, S.A. (CFM) LEAP–1B21, LEAP–1B23, LEAP–1B25, LEAP–1B27, LEAP–1B28, LEAP–1B28B1, LEAP–1B28B2, LEAP–1B28B2C, LEAP–1B28B3, LEAP–1B28BBJ1, and LEAP–1B28BBJ2 model turbofan engines.

(d) Subject

Joint Aircraft System Component (JASC) Code 7230, Turbine Engine Compressor Section, and JASC Code 7250, Turbine Section.

(e) Unsafe Condition

This AD was prompted by the detection of melt-related freckles in the billet, which may reduce the life of certain compressor rotor stages 6–10 spools, high pressure turbine (HPT) rotor mid seals, HPT rotor stage 2

disks, low pressure turbine (LPT) stage 2 disks, and LPT stage 3 disks. The FAA is issuing this AD to prevent the failure of the high pressure compressor, HPT rotor, and LPT rotor. The unsafe condition, if not addressed, could result in release of uncontained debris, damage to the engine, and damage to the airplane.

(f) Compliance

Comply with this AD within the compliance times specified, unless already done.

(g) Required Actions

Within 60 days after the effective date of this AD, revise the airworthiness limitations section of the applicable CFM LEAP–1B Engine Shop Manual and the operator's existing approved continuous airworthiness maintenance program by incorporating the following service information:

(1) CFM High Pressure Compressor Rotor Life Limits LEAP–1B–05–11–02–01A–0B1B–C, Issue 009–00, dated July 26, 2021; and

(2) CFM High Pressure Turbine Rotor Life Limits LEAP–1B–05–11–03–01A–0B1B–C, Issue 006–00, dated July 26, 2021; and

(3) CFM Low Pressure Turbine Rotor Life Limits LEAP–1B–05–11–04–01A–0B1B–C, Issue 006–00, dated June 1, 2021.

(h) Alternative Methods of Compliance (AMOCs)

(1) The Manager, ECO Branch, FAA, has the authority to approve AMOCs for this AD, if requested using the procedures found in 14 CFR 39.19. In accordance with 14 CFR 39.19, send your request to your principal inspector or local Flight Standards District Office, as appropriate. If sending information directly to the manager of the certification office, send it to the attention of the person identified in paragraph (i)(1) of this AD and email to: *ANE-AD-AMOC@faa.gov.*

(2) Before using any approved AMOC, notify your appropriate principal inspector, or lacking a principal inspector, the manager of the local flight standards district office/certificate holding district office.

(i) Related Information

(1) For more information about this AD, contact Mehdi Lamnyi, Aviation Safety Engineer, ECO Branch, FAA, 1200 District Avenue, Burlington, MA 01803; phone: (781) 238–7743; email: *Mehdi.Lamnyi@faa.gov.*

(2) For service information identified in this AD, contact CFM International, S.A., Aviation Operations Center, 1 Neumann Way, M/D Room 285, Cincinnati, OH 45125; phone: (877) 432–3272; email: *fleetsupport@ge.com.* You may view this referenced service information at the FAA, Airworthiness Products Section, Operational Safety Branch, 1200 District Avenue, Burlington, MA 01803. For information on the availability of this material at the FAA, call (817) 222–5110.

Issued on February 3, 2022.

Lance T. Gant,

Director, Compliance & Airworthiness Division, Aircraft Certification Service.

[FR Doc. 2022–03041 Filed 2–14–22; 8:45 am]

BILLING CODE 4910–13–P

DEPARTMENT OF TRANSPORTATION

Federal Aviation Administration

14 CFR Part 39

[Docket No. FAA–2022–0010; Project Identifier AD–2021–00850–T]

RIN 2120–AA64

Airworthiness Directives; The Boeing Company Airplanes

AGENCY: Federal Aviation Administration (FAA), DOT.

ACTION: Notice of proposed rulemaking (NPRM).

SUMMARY: The FAA proposes to adopt a new airworthiness directive (AD) for certain The Boeing Company Model 787–8, 787–9, and 787–10 airplanes. This proposed AD was prompted by a report that during a C-check, corrosion was found in the vertical fin tension bolt hole located in the aluminum crown frames at Section 48. This proposed AD would require inspecting certain vertical fin tension bolt holes; reviewing the bolt sealant application installation procedure in the existing maintenance or inspection program, as applicable; checking maintenance records to determine the replacement status of vertical fin tension bolts; and doing applicable on-condition actions. The FAA is proposing this AD to address the unsafe condition on these products.

DATES: The FAA must receive comments on this proposed AD by April 1, 2022.

ADDRESSES: You may send comments, using the procedures found in 14 CFR 11.43 and 11.45, by any of the following methods:

- *Federal eRulemaking Portal:* Go to *https://www.regulations.gov.* Follow the instructions for submitting comments.
- *Fax:* 202–493–2251.
- *Mail:* U.S. Department of Transportation, Docket Operations, M–30, West Building Ground Floor, Room W12–140, 1200 New Jersey Avenue SE, Washington, DC 20590.
- *Hand Delivery:* Deliver to Mail address above between 9 a.m. and 5 p.m., Monday through Friday, except Federal holidays.

For service information identified in this NPRM, contact Boeing Commercial Airplanes, Attention: Contractual & Data Services (C&DS), 2600 Westminster Blvd., MC 110–SK57, Seal Beach, CA 90740–5600; telephone 562–797–1717; internet *https://www.myboeingfleet.com.* You may view this referenced service information at the FAA, Airworthiness Products Section, Operational Safety Branch, 2200 South 216th St., Des Moines, WA. For information on the availability of this material at the FAA, call 206–231–3195. It is also available at *https://www.regulations.gov* by searching for and locating Docket No. FAA–2022–0010.

Examining the AD Docket

You may examine the AD docket at *https://www.regulations.gov* by searching for and locating Docket No. FAA–2022–0010; or in person at Docket Operations between 9 a.m. and 5 p.m., Monday through Friday, except Federal holidays. The AD docket contains this NPRM, any comments received, and other information. The street address for Docket Operations is listed above.

FOR FURTHER INFORMATION CONTACT: Greg Rutar, Aerospace Engineer, Airframe Section, FAA, Seattle ACO Branch, 2200 South 216th St., Des Moines, WA 98198; phone and fax: 206–231–3529; email: *greg.rutar@faa.gov.*

SUPPLEMENTARY INFORMATION:

Comments Invited

The FAA invites you to send any written relevant data, views, or arguments about this proposal. Send your comments to an address listed under **ADDRESSES**. Include ''Docket No. FAA–2022–0010; Project Identifier AD–2021–00850–T'' at the beginning of your comments. The most helpful comments reference a specific portion of the proposal, explain the reason for any recommended change, and include supporting data. The FAA will consider all comments received by the closing date and may amend this proposal because of those comments.

Except for Confidential Business Information (CBI) as described in the following paragraph, and other information as described in 14 CFR 11.35, the FAA will post all comments received, without change, to *https://www.regulations.gov,* including any personal information you provide. The agency will also post a report summarizing each substantive verbal contact received about this NPRM.

Confidential Business Information

CBI is commercial or financial information that is both customarily and actually treated as private by its owner. Under the Freedom of Information Act (FOIA) (5 U.S.C. 552), CBI is exempt from public disclosure. If your comments responsive to this NPRM contain commercial or financial information that is customarily treated as private, that you actually treat as private, and that is relevant or responsive to this NPRM, it is important that you clearly designate the submitted

comments as CBI. Please mark each page of your submission containing CBI as ''PROPIN.'' The FAA will treat such marked submissions as confidential under the FOIA, and they will not be placed in the public docket of this NPRM. Submissions containing CBI should be sent to Greg Rutar, Aerospace Engineer, Airframe Section, FAA, Seattle ACO Branch, 2200 South 216th St., Des Moines, WA 98198; phone and fax: 206–231–3529; email: *greg.rutar@faa.gov.* Any commentary that the FAA receives which is not specifically designated as CBI will be placed in the public docket for this rulemaking.

Background

The FAA has received a report indicating that during a C-check, corrosion was found in the vertical fin tension bolt hole located in the aluminum crown frames at Section 48. Upon further investigation, it was found that the corrosion was caused by insufficient sealant application during the vertical fin tension bolt installation. This condition, if not addressed, could result in undetected corrosion. Undetected corrosion in this location could lead to the structure falling below residual strength requirements and the loss of the vertical fin, which could result in loss of control of the airplane.

FAA's Determination

The FAA is issuing this NPRM after determining that the unsafe condition described previously is likely to exist or develop on other products of the same type design.

Related Service Information Under 1 CFR Part 51

The FAA reviewed Boeing Alert Requirements Bulletin B787–81205–SB550010–00 RB, Issue 001, dated May 24, 2021. This service information specifies, depending on airplane configuration, procedures for a detailed inspection of the vertical fin tension bolt holes (16 locations) in the aluminum crown frames, composite deck, and root fittings for corrosion and finish degradation; a review of the existing maintenance or inspection program, as applicable, related to the vertical fin tension bolt installation procedure to determine if the sealant application is correct; a review of the maintenance records to determine if a vertical fin tension bolt has been replaced and to determine the sealant application procedure that was used; and applicable on-condition actions. On-condition actions include applying sealant and installing new vertical fin tension bolts and barrel nuts; revising the existing maintenance or inspection program, as applicable, to include the minimum requirement for the correct vertical fin tension bolt sealant application procedure; a detailed inspection for corrosion and finish degradation of only the affected vertical fin tension bolt holes in the aluminum crown frame, composite deck, and root fittings; and repair. This service information is reasonably available because the interested parties have access to it through their normal course of business or by the means identified in **ADDRESSES**.

Proposed AD Requirements in This NPRM

This proposed AD would require accomplishing the actions specified in the service information already described. For information on the procedures and compliance times, see this service information at *https://www.regulations.gov* by searching for and locating Docket No. FAA–2022–0010.

Costs of Compliance

The FAA estimates that this AD, if adopted as proposed, would affect 116 airplanes of U.S. registry. The FAA estimates the following costs to comply with this proposed AD:

ESTIMATED COSTS

Action	Labor cost	Parts cost	Cost per product	Cost on U.S. operators
Inspection (16 locations), sealant application, and bolt/nut installation.	5.2 work-hours × $85 per hour = $442	$20,580	$21,022	$2,438,552
Review the existing maintenance or inspection program, as applicable.	1 work-hour × $85 per hour = $85	0	85	9,860
Records review	1 work-hour × $85 per hour = $85	0	85	9,860

The FAA estimates the following costs to do any necessary detailed inspection of the affected holes that would be required based on the results of the proposed actions. The agency has no way of determining the number of aircraft that might need these on-condition actions:

ON-CONDITION COSTS *

Action	Labor cost	Parts cost	Cost per product
Inspection	5 work-hours × $85 per hour = $425	$0	$425

* Does not include cost of revising the maintenance program.

The FAA has determined that revising the existing maintenance or inspection program, if required, takes an average of 90 work-hours per operator, although the agency recognizes that this number may vary from operator to operator. Since operators incorporate maintenance or inspection program changes for their affected fleet(s), the FAA has determined that a per-operator estimate is more accurate than a per-airplane estimate. Therefore, the FAA estimates the average total cost per operator to be $7,650 (90 work-hours × $85 per work-hour).

The FAA has received no definitive data on which to base the cost estimates for the repair specified in this proposed AD.

The FAA has included all known costs in its cost estimate. According to the manufacturer, however, some or all of the costs of this proposed AD may be covered under warranty, thereby reducing the cost impact on affected operators.

Authority for This Rulemaking

Title 49 of the United States Code specifies the FAA's authority to issue rules on aviation safety. Subtitle I, section 106, describes the authority of the FAA Administrator. Subtitle VII: Aviation Programs, describes in more detail the scope of the Agency's authority.

The FAA is issuing this rulemaking under the authority described in Subtitle VII, Part A, Subpart III, Section 44701: General requirements. Under that section, Congress charges the FAA with promoting safe flight of civil aircraft in air commerce by prescribing regulations for practices, methods, and procedures the Administrator finds necessary for safety in air commerce. This regulation is within the scope of that authority because it addresses an unsafe condition that is likely to exist or develop on products identified in this rulemaking action.

Regulatory Findings

The FAA determined that this proposed AD would not have federalism implications under Executive Order 13132. This proposed AD would not have a substantial direct effect on the States, on the relationship between the national Government and the States, or on the distribution of power and responsibilities among the various levels of government.

For the reasons discussed above, I certify this proposed regulation:

(1) Is not a ''significant regulatory action'' under Executive Order 12866,

(2) Would not affect intrastate aviation in Alaska, and

(3) Would not have a significant economic impact, positive or negative, on a substantial number of small entities under the criteria of the Regulatory Flexibility Act.

List of Subjects in 14 CFR Part 39

Air transportation, Aircraft, Aviation safety, Incorporation by reference, Safety.

The Proposed Amendment

Accordingly, under the authority delegated to me by the Administrator, the FAA proposes to amend 14 CFR part 39 as follows:

PART 39—AIRWORTHINESS DIRECTIVES

■ 1. The authority citation for part 39 continues to read as follows:

Authority: 49 U.S.C. 106(g), 40113, 44701.

§ 39.13 [Amended]

■ 2. The FAA amends § 39.13 by adding the following new airworthiness directive:

The Boeing Company: Docket No. FAA–2022–0010; Project Identifier AD–2021–00850–T.

(a) Comments Due Date

The FAA must receive comments on this airworthiness directive (AD) by April 1, 2022.

(b) Affected ADs

None.

(c) Applicability

This AD applies to The Boeing Company Model 787–8, 787–9, and 787–10 airplanes, certificated in any category, as identified in Boeing Alert Requirements Bulletin B787–81205–SB550010–00 RB, Issue 001, dated May 24, 2021.

(d) Subject

Air Transport Association (ATA) of America Code 55, Stabilizers.

(e) Unsafe Condition

This AD was prompted by a report that during a C-check, corrosion was found in the vertical fin tension bolt hole located in the aluminum crown frames at Section 48. The FAA is issuing this AD to address undetected corrosion, which could lead to the structure falling below residual strength requirements and the loss of the vertical fin, and result in loss of control of the airplane.

(f) Compliance

Comply with this AD within the compliance times specified, unless already done.

(g) Required Actions

Except as specified by paragraph (h) of this AD: At the applicable times specified in the ''Compliance'' paragraph of Boeing Alert Requirements Bulletin B787–81205–SB550010–00 RB, Issue 001, dated May 24, 2021, do all applicable actions identified in, and in accordance with, the Accomplishment Instructions of Boeing Alert Requirements Bulletin B787–81205–SB550010–00 RB, Issue 001, dated May 24, 2021.

Note 1 to paragraph (g): Guidance for accomplishing the actions required by this AD can be found in Boeing Alert Service Bulletin B787–81205–SB550010–00, Issue 001, dated May 24, 2021, which is referred to in Boeing Alert Requirements Bulletin B787–81205–SB550010–00 RB, Issue 001, dated May 24, 2021.

(h) Exceptions to Service Information Specifications

(1) Where the Compliance Time columns of the tables in the ''Compliance'' paragraph of Boeing Alert Requirements Bulletin B787–81205–SB550010–00 RB, Issue 001, dated May 24, 2021, uses the phrase ''the Issue 1 date of Requirements Bulletin B787–81205–SB550010–00 RB,'' this AD requires using ''the effective date of this AD.''

(2) Where Boeing Alert Requirements Bulletin B787–81205–SB550010–00 RB, Issue 001, dated May 24, 2021, specifies contacting Boeing for repair instructions: This AD requires doing the repair using a method approved in accordance with the procedures specified in paragraph (i) of this AD.

(i) Alternative Methods of Compliance (AMOCs)

(1) The Manager, Seattle ACO Branch, FAA, has the authority to approve AMOCs for this AD, if requested using the procedures found in 14 CFR 39.19. In accordance with 14 CFR 39.19, send your request to your principal inspector or responsible Flight Standards Office, as appropriate. If sending information directly to the manager of the certification office, send it to the attention of the person identified in paragraph (j) of this AD. Information may be emailed to: *9-ANM-Seattle-ACO-AMOC-Requests@faa.gov.*

(2) Before using any approved AMOC, notify your appropriate principal inspector, or lacking a principal inspector, the manager of the responsible Flight Standards Office.

(3) An AMOC that provides an acceptable level of safety may be used for any repair, modification, or alteration required by this AD if it is approved by The Boeing Company Organization Designation Authorization (ODA) that has been authorized by the Manager, Seattle ACO Branch, FAA, to make those findings. To be approved, the repair method, modification deviation, or alteration deviation must meet the certification basis of the airplane, and the approval must specifically refer to this AD.

(j) Related Information

(1) For more information about this AD, contact Greg Rutar, Aerospace Engineer, Airframe Section, FAA, Seattle ACO Branch, 2200 South 216th St., Des Moines, WA 98198; phone and fax: 206–231–3529; email: *greg.rutar@faa.gov.*

(2) For service information identified in this AD, contact Boeing Commercial Airplanes, Attention: Contractual & Data Services (C&DS), 2600 Westminster Blvd., MC 110–SK57, Seal Beach, CA 90740–5600; telephone 562–797–1717; internet *https://www.myboeingfleet.com.* You may view this referenced service information at the FAA, Airworthiness Products Section, Operational Safety Branch, 2200 South 216th St., Des Moines, WA. For information on the availability of this material at the FAA, call 206–231–3195.

Issued on January 14, 2022.

Lance T. Gant,

Director, Compliance & Airworthiness Division, Aircraft Certification Service.

[FR Doc. 2022–03133 Filed 2–14–22; 8:45 am]

BILLING CODE 4910–13–P

DEPARTMENT OF TRANSPORTATION

Federal Aviation Administration

14 CFR Part 39

[Docket No. FAA–2022–0100; Project Identifier MCAI–2021–01128–R]

RIN 2120–AA64

Airworthiness Directives; Airbus Helicopters Deutschland GmbH (AHD) Helicopters

AGENCY: Federal Aviation Administration (FAA), DOT.

ACTION: Notice of proposed rulemaking (NPRM).

SUMMARY: The FAA proposes to adopt a new airworthiness directive (AD) for all Airbus Helicopters Deutschland GmbH (AHD) Model MBB–BK 117 C–2 helicopters. This proposed AD was prompted by a report of restricted collective lever movement caused by entanglement of the emergency flashlight strap with the cargo hook emergency release lever, causing the emergency flashlight to leave its seat. This proposed AD would require replacing each affected emergency flashlight with a serviceable part, as specified in a European Union Aviation Safety Agency (EASA) AD, which is proposed for incorporation by reference. The FAA is proposing this AD to address the unsafe condition on these products.

DATES: The FAA must receive comments on this proposed AD by April 1, 2022.

ADDRESSES: You may send comments, using the procedures found in 14 CFR 11.43 and 11.45, by any of the following methods:

- *Federal eRulemaking Portal:* Go to *https://www.regulations.gov.* Follow the instructions for submitting comments.
- *Fax:* (202) 493–2251.
- *Mail:* U.S. Department of Transportation, Docket Operations, M–30, West Building Ground Floor, Room W12–140, 1200 New Jersey Avenue SE, Washington, DC 20590.
- *Hand Delivery:* Deliver to Mail address above between 9 a.m. and 5 p.m., Monday through Friday, except Federal holidays.

For EASA material that is proposed for IBR in this AD, contact EASA, Konrad-Adenauer-Ufer 3, 50668 Cologne, Germany; telephone +49 221 8999 000; email *ADs@easa.europa.eu;* internet *www.easa.europa.eu.* You may find the EASA material on the EASA website at *https://ad.easa.europa.eu.* For Airbus Helicopters service information identified in this NPRM, contact Airbus Helicopters, 2701 North Forum Drive, Grand Prairie, TX 75052; telephone (972) 641–0000 or (800) 232–0323; fax (972) 641–3775; or at *https://www.airbus.com/helicopters/services/technical-support.html.* You may view this material at the FAA, Office of the Regional Counsel, Southwest Region, 10101 Hillwood Pkwy., Room 6N–321, Fort Worth, TX 76177. For information on the availability of this material at the FAA, call (817) 222–5110. The EASA material is also available at *https://www.regulations.gov* by searching for and locating Docket No. FAA–2022–0100.

Examining the AD Docket

You may examine the AD docket at *https://www.regulations.gov* by searching for and locating Docket No. FAA–2022–0100; or in person at Docket Operations between 9 a.m. and 5 p.m., Monday through Friday, except Federal holidays. The AD docket contains this NPRM, the EASA AD, any comments received, and other information. The street address for Docket Operations is listed above.

FOR FURTHER INFORMATION CONTACT: Andrea Jimenez, Aerospace Engineer, COS Program Management Section, Operational Safety Branch, Compliance & Airworthiness Division, FAA, 1600 Stewart Ave., Suite 410, Westbury, NY 11590; telephone (516) 228–7330; email *andrea.jimenez@faa.gov.*

SUPPLEMENTARY INFORMATION:

Comments Invited

The FAA invites you to send any written relevant data, views, or arguments about this proposal. Send your comments to an address listed under **ADDRESSES**. Include ''Docket No. FAA–2022–0100; Project Identifier MCAI–2021–01128–R'' at the beginning of your comments. The most helpful comments reference a specific portion of the proposal, explain the reason for any recommended change, and include supporting data. The FAA will consider all comments received by the closing date and may amend this proposal because of those comments.

Except for Confidential Business Information (CBI) as described in the following paragraph, and other information as described in 14 CFR 11.35, the FAA will post all comments received, without change, to *https://www.regulations.gov,* including any personal information you provide. The agency will also post a report summarizing each substantive verbal contact received about this NPRM.

Confidential Business Information

CBI is commercial or financial information that is both customarily and actually treated as private by its owner. Under the Freedom of Information Act (FOIA) (5 U.S.C. 552), CBI is exempt from public disclosure. If your comments responsive to this NPRM contain commercial or financial information that is customarily treated as private, that you actually treat as private, and that is relevant or responsive to this NPRM, it is important that you clearly designate the submitted comments as CBI. Please mark each page of your submission containing CBI as ''PROPIN.'' The FAA will treat such marked submissions as confidential under the FOIA, and they will not be placed in the public docket of this NPRM. Submissions containing CBI should be sent to Andrea Jimenez, Aerospace Engineer, COS Program Management Section, Operational Safety Branch, Compliance & Airworthiness Division, FAA, 1600 Stewart Ave., Suite 410, Westbury, NY 11590; telephone (516) 228–7330; email *andrea.jimenez@faa.gov.* Any commentary that the FAA receives that is not specifically designated as CBI will be placed in the public docket for this rulemaking.

Background

EASA, which is the Technical Agent for the Member States of the European Union, has issued EASA AD 2021–0231, dated October 15, 2021 (EASA AD 2021–0231), to correct an unsafe condition for all serial-numbered Airbus Helicopters Deutschland GmbH (AHD) Model MBB–BK 117 C–2 helicopters.

This proposed AD was prompted by a report of restricted collective lever movement caused by entanglement of the emergency flashlight strap with the cargo hook emergency release lever, causing the emergency flashlight to leave its seat. The FAA is proposing this AD to address entanglement of the emergency flashlight strap with the cargo hook emergency release lever. The unsafe condition, if not addressed, could result reduced control of the helicopter, resulting in damage to the helicopter and injury to occupants. See EASA AD 2021–0231 for additional background information.

Related Service Information Under 1 CFR Part 51

EASA AD 2021–0231 requires replacing each affected emergency flashlight with a serviceable part. EASA AD 2021–0231 also specifies that an affected part can be modified and re-identified into a serviceable part. EASA AD 2021–0231 also prohibits the installation of an affected part.

This material is reasonably available because the interested parties have

access to it through their normal course of business or by the means identified in the **ADDRESSES** section.

Other Related Service Information

The FAA also reviewed Airbus Helicopters Alert Service Bulletin ASB MBB–BK117 C-2–25A-021, Revision 0, dated August 25, 2021. This service information specifies procedures for removing the strap from the emergency flashlight and then writing a new part number on the emergency flashlight.

FAA's Determination

These helicopters have been approved by EASA and are approved for operation in the United States. Pursuant to the FAA's bilateral agreement with the European Union, EASA has notified the FAA about the unsafe condition described in its AD. The FAA is proposing this AD after evaluating all known relevant information and determining that the unsafe condition described previously is likely to exist or develop on other helicopters of the same type design.

Proposed AD Requirements in This NPRM

This proposed AD would require accomplishing the actions specified in EASA AD 2021–0231, described previously, as incorporated by reference, except for any differences identified as exceptions in the regulatory text of this proposed AD and except as discussed under ''Differences Between this Proposed AD and the EASA AD.''

Explanation of Required Compliance Information

In the FAA's ongoing efforts to improve the efficiency of the AD process, the FAA developed a process to use some civil aviation authority (CAA) ADs as the primary source of information for compliance with requirements for corresponding FAA ADs. The FAA has been coordinating this process with manufacturers and CAAs. As a result, the FAA proposes to incorporate EASA AD 2021–0231 by reference in the FAA final rule. This proposed AD would, therefore, require compliance with EASA AD 2021–0231 in its entirety through that incorporation, except for any differences identified as exceptions in the regulatory text of this proposed AD. Using common terms that are the same as the heading of a particular section in EASA AD 2021–0231 does not mean that operators need comply only with that section. For example, where the AD requirement refers to ''all required actions and compliance times,'' compliance with this AD requirement is not limited to the section titled ''Required Action(s) and Compliance Time(s)'' in EASA AD 2021–0231. Service information referenced in EASA AD 2021–0231 for compliance will be available at *https://www.regulations.gov* by searching for and locating Docket No. FAA–2022–0100 after the FAA final rule is published.

Differences Between This Proposed AD and the EASA AD

EASA AD 2021–0231 requires compliance within 12 months after the effective date of the EASA AD, whereas this proposed AD would require compliance within 3 months after the effective date of this AD.

Costs of Compliance

The FAA estimates that this AD, if adopted as proposed, would affect 117 helicopters of U.S. Registry. Labor rates are estimated at $85 per work-hour. Based on these numbers, the FAA estimates the following costs to comply with this proposed AD.

Replacing an emergency flashlight would take about 1 work-hour and parts would cost about $219 for an estimated cost of $304 per flashlight and up to $35,568 for the U.S. fleet. Alternatively, modifying an emergency flashlight would take about 1 work-hour for an estimated cost of $85 per flashlight.

Authority for This Rulemaking

Title 49 of the United States Code specifies the FAA's authority to issue rules on aviation safety. Subtitle I, section 106, describes the authority of the FAA Administrator. Subtitle VII: Aviation Programs, describes in more detail the scope of the Agency's authority.

The FAA is issuing this rulemaking under the authority described in Subtitle VII, Part A, Subpart III, Section 44701: General requirements. Under that section, Congress charges the FAA with promoting safe flight of civil aircraft in air commerce by prescribing regulations for practices, methods, and procedures the Administrator finds necessary for safety in air commerce. This regulation is within the scope of that authority because it addresses an unsafe condition that is likely to exist or develop on products identified in this rulemaking action.

Regulatory Findings

The FAA determined that this proposed AD would not have federalism implications under Executive Order 13132. This proposed AD would not have a substantial direct effect on the States, on the relationship between the national Government and the States, or on the distribution of power and responsibilities among the various levels of government.

For the reasons discussed above, I certify this proposed regulation:

(1) Is not a ''significant regulatory action'' under Executive Order 12866,

(2) Would not affect intrastate aviation in Alaska, and

(3) Would not have a significant economic impact, positive or negative, on a substantial number of small entities under the criteria of the Regulatory Flexibility Act.

List of Subjects in 14 CFR Part 39

Air transportation, Aircraft, Aviation safety, Incorporation by reference, Safety.

The Proposed Amendment

Accordingly, under the authority delegated to me by the Administrator, the FAA proposes to amend 14 CFR part 39 as follows:

PART 39—AIRWORTHINESS DIRECTIVES

■ 1. The authority citation for part 39 continues to read as follows:

Authority: 49 U.S.C. 106(g), 40113, 44701.

§ 39.13 [Amended]

■ 2. The FAA amends § 39.13 by adding the following new airworthiness directive:

Airbus Helicopters Deutschland GmbH (AHD): Docket No. FAA–2022–0100; Project Identifier MCAI–2021–01128–R.

(a) Comments Due Date

The FAA must receive comments on this airworthiness directive (AD) by April 1, 2022.

(b) Affected ADs

None.

(c) Applicability

This AD applies to Airbus Helicopters Deutschland GmbH (AHD) Model MBB–BK 117 C–2 helicopters, certificated in any category.

(d) Subject

Joint Aircraft Service Component (JASC) Code: 2510, Flight Compartment Equipment.

(e) Unsafe Condition

This AD was prompted by a report of restricted collective lever movement. Subsequent inspection determined that the emergency flashlight was stuck under that lever caused by entanglement of the emergency flashlight strap with the cargo hook emergency release lever, causing the emergency flashlight to leave its seat. The FAA is issuing this AD to address entanglement of the emergency flashlight strap with the cargo hook emergency release lever. The unsafe condition, if not addressed,

could result in reduced control of the helicopter, possibly resulting in damage to the helicopter and injury to occupants.

(f) Compliance

Comply with this AD within the compliance times specified, unless already done.

(g) Requirements

Except as specified in paragraph (h) of this AD: Comply with all required actions and compliance times specified in, and in accordance with, European Union Aviation Safety Agency (EASA) AD 2021–0231, dated October 15, 2021 (EASA AD 2021–0231).

(h) Exceptions to EASA AD 2021–0231

(1) Where EASA AD 2021–0231 refers to its effective date, this AD requires using the effective date of this AD.

(2) This AD does not mandate compliance with the ''Remarks'' section of EASA AD 2021–0231.

(3) Where paragraph (1) of EASA AD 2021–0231 requires replacing each affected part with a serviceable part within 12 months, this AD requires compliance within 3 months after the effective date of this AD.

(i) No Reporting Requirement

Although the service information referenced in EASA AD 2021–0231 specifies to submit certain information to the manufacturer, this AD does not include that requirement.

(j) Alternative Methods of Compliance (AMOCs)

(1) The Manager, International Validation Branch, FAA, has the authority to approve AMOCs for this AD, if requested using the procedures found in 14 CFR 39.19. In accordance with 14 CFR 39.19, send your request to your principal inspector or local Flight Standards District Office, as appropriate. If sending information directly to the manager of the International Validation Branch, send it to the attention of the person identified in paragraph (k)(2) of this AD. Information may be emailed to: *9-AVS-AIR-730-AMOC@faa.gov.*

(2) Before using any approved AMOC, notify your appropriate principal inspector, or lacking a principal inspector, the manager of the local flight standards district office/certificate holding district office.

(k) Related Information

(1) For EASA AD 2021–0231, contact EASA, Konrad-Adenauer-Ufer 3, 50668 Cologne, Germany; telephone +49 221 8999 000; email *ADs@easa.europa.eu;* internet *www.easa.europa.eu.* You may view this material at the FAA, Office of the Regional Counsel, Southwest Region, 10101 Hillwood Pkwy., Room 6N–321, Fort Worth, TX 76177. For information on the availability of this material at the FAA, call (817) 222–5110. This material may be found in the AD docket at *https://www.regulations.gov* by searching for and locating Docket No. FAA–2022–0100.

(2) For more information about this AD, contact Andrea Jimenez, Aerospace Engineer, COS Program Management Section, Operational Safety Branch, Compliance & Airworthiness Division, FAA, 1600 Stewart Ave., Suite 410, Westbury, NY 11590; telephone (516) 228–7330; email *andrea.jimenez@faa.gov.*

Issued on February 7, 2022.

Lance T. Gant,

Director, Compliance & Airworthiness Division, Aircraft Certification Service.

[FR Doc. 2022–03108 Filed 2–14–22; 8:45 am]

BILLING CODE 4910–13–P

CONSUMER PRODUCT SAFETY COMMISSION

16 CFR Parts 1112 and 1260

[Docket No. CPSC–2013–0028]

Safety Standard for Operating Cords on Custom Window Coverings; Notice of Opportunity for Oral Presentation of Comments

AGENCY: Consumer Product Safety Commission.

ACTION: Notice of proposed rulemaking; notice of opportunity for oral presentation of comments.

SUMMARY: The Consumer Product Safety Commission (Commission or CPSC) will be providing an opportunity for interested parties to present oral comments on the notice of proposed rulemaking (NPR) the Commission issued regarding a safety standard for operating cords on custom window coverings. Any oral comments will be part of the rulemaking record.

DATES: The hearing will begin at 10 a.m. Eastern Standard Time (EST) on March 16, 2022, via webinar. All attendees should pre-register for the webinar online at: *https://attendee.gotowebinar.com/register/2824746947802696460.* Any individual interested in making an oral presentation must register for the webinar and submit a request to make an oral presentation to the Division of the Secretariat, along with the written text of the oral presentation, and such requests must be received no later than 5 p.m. EST on March 2, 2022. All other individuals who wish to attend the hearing should register before the start of the hearing.

ADDRESSES: The hearing will be held via webinar. Attendance is free of charge. Submit requests to make oral presentations and the written text of oral presentations to the Division of the Secretariat, with the caption, ''Custom Window Coverings NPR; Oral Presentation,'' by email to *cpsc-os@cpsc.gov,* or by mail to the Division of the Secretariat, Consumer Product Safety Commission, 4330 East-West Highway, Bethesda, MD 20814. Detailed instructions for those making oral presentations and other attendees will be made available on the CPSC public calendar.

FOR FURTHER INFORMATION CONTACT: For information about the subject matter of this hearing, contact Rana Balci-Sinha, Director, Division of Human Factors, Directorate for Engineering Sciences, Office of Hazard Identification and Reduction, Consumer Product Safety Commission, National Product Testing and Evaluation Center, 5 Research Place, Rockville, MD 20850; telephone: 301–987–2584; *rbalcisinha@cpsc.gov.* For information about the procedure to make an oral presentation, contact Alberta E. Mills, Division of the Secretariat, Consumer Product Safety Commission, 4330 East-West Highway, Bethesda, MD 20814; *cpsc-os@cpsc.gov.*

SUPPLEMENTARY INFORMATION:

I. Background

On January 7, 2022, the Commission published a notice of proposed rulemaking (NPR) in the **Federal Register**, proposing to issue a Safety Standard for Operating Cords on Custom Window Coverings under the Consumer Product Safety Act (CPSA; 15 U.S.C. 2051–2089), and seeking written comments. 87 FR 1014. The NPR seeks to address an unreasonable risk of strangulation to children 8 years old and younger associated with custom window coverings that have accessible operating cords that are longer than 8 inches. The NPR would require that operating cords on custom window coverings meet the same requirements as operating cords on stock window coverings, as set forth in the applicable voluntary standard, ANSI/WCMA A100.1—2018, American National Standard for Safety of Corded Window Covering Products. Thus, the proposed rule proposes that operating cords on custom window coverings must be cordless, inaccessible, or 8 inches or shorter in length in any use position. If finalized, operating cords on custom window coverings would require testing and certification to the rule under section 14 of the CPSA. Moreover, operating cords on custom window coverings that meet the definition of a ''children's product'' would require third party testing by a CPSC-accredited third party conformity assessment body. Accordingly, the proposed rule also proposes to amend the Commission's regulation at 16 CFR part 1112 to add ''Safety Standard for Operating Cords on Custom Window Coverings'' to the list of rules that require third party testing. The NPR is available at: *https://www.federalregister.gov/d/2021-27896,* and CPSC staff's briefing package for the

NPR is available at: *https://www.cpsc.gov/s3fs-public/NPRs-Add-Window-Covering-Cords-to-Substantial-Product-Hazard-List-Establish-Safety-Standard-for-Operating-Cords-on-Custom-Window-Coverings-updated-10-29-2021.pdf?VersionId=HIM05bK3WDLRZrlNGogQLknhFvhtx3PD.*

II. The Public Hearing

The Administrative Procedure Act (5 U.S.C. 551–562) and section 9 of the CPSA require the Commission to provide interested parties with an opportunity to submit ''written data, views, or arguments'' regarding a proposed rule. 5 U.S.C. 553(c); 15 U.S.C. 2058(d)(2). The NPR invited such written comments. Section 9 of the CPSA also requires the Commission to provide interested parties ''an opportunity for oral presentation of data, views, or arguments.'' 15 U.S.C. 2058(d)(2). The Commission must keep a transcript of such oral presentations. *Id.* To satisfy this requirement, the Commission is providing a forum for oral presentations concerning the proposed Safety Standard for Operating Cords on Custom Window Coverings.[1]

To request the opportunity to make an oral presentation, see the information under the **DATES** and **ADDRESSES** sections of this notice. Participants should limit their presentations to approximately 10 minutes, excluding time for questioning by the Commissioners or CPSC staff. To avoid duplicate presentations, groups should designate a spokesperson, and the Commission reserves the right to limit presentation times or impose further restrictions, as necessary.

Alberta E. Mills,

Secretary, Consumer Product Safety Commission.

[FR Doc. 2022–03158 Filed 2–14–22; 8:45 am]

BILLING CODE 6355–01–P

CONSUMER PRODUCT SAFETY COMMISSION

16 CFR Parts 1112 and 1262

[Docket No. CPSC–2021–0037]

Safety Standard for Magnets; Notice of Opportunity for Oral Presentation of Comments

AGENCY: Consumer Product Safety Commission.

ACTION: Notice of proposed rulemaking; notice of opportunity for oral presentation of comments.

SUMMARY: The Consumer Product Safety Commission (Commission or CPSC) will be providing an opportunity for interested parties to present oral comments on the notice of proposed rulemaking (NPR) the Commission issued regarding a safety standard for magnets. Any oral comments will be part of the rulemaking record.

DATES: The hearing will begin at 10 a.m. Eastern Standard Time (EST) on March 2, 2022, via webinar. All attendees should pre-register for the webinar online at: *https://attendee.gotowebinar.com/register/7528473084591026190.*

Any individual interested in making an oral presentation must register for the webinar and submit a request to make an oral presentation to the Division of the Secretariat, along with the written text of the oral presentation, and such requests must be received no later than 5 p.m. EST on February 23, 2022. All other individuals who wish to attend the meeting should register before the start of the hearing.

ADDRESSES: The hearing will be held via webinar. Attendance is free of charge. Submit requests to make oral presentations and the written text of oral presentations to the Division of the Secretariat, with the caption, ''Magnets NPR; Oral Presentation,'' by email to *cpsc-os@cpsc.gov,* or by mail to the Division of the Secretariat, Consumer Product Safety Commission, 4330 East-West Highway, Bethesda, MD 20814. Detailed instructions for those making oral presentations and other attendees will be made available on the CPSC public calendar.

FOR FURTHER INFORMATION CONTACT: For information about the subject matter of this hearing, contact Stephen Harsanyi, Project Manager, Consumer Product Safety Commission, 5 Research Place, Rockville, MD 20850; email: *SHarsanyi@cpsc.gov.* For information about the procedure to make an oral presentation, contact Alberta E. Mills, Division of the Secretariat, Consumer Product Safety Commission, 4330 East-West Highway, Bethesda, MD 20814; *cpsc-os@cpsc.gov.*

SUPPLEMENTARY INFORMATION:

I. Background

On January 10, 2022, the Commission published an NPR in the **Federal Register**, proposing to issue a safety standard for magnets under the Consumer Product Safety Act (CPSA; 15 U.S.C. 2051–2089), and seeking written comments. 87 FR 1260. The proposed rule seeks to address the risk of injury or death associated with magnet ingestions, by requiring loose or separable magnets in subject magnet products to be either too large to swallow, or weak enough to reduce the risk of internal interaction injuries when swallowed. The proposed rule would apply to ''subject magnet products,'' which are consumer products that are designed, marketed, or intended to be used for entertainment, jewelry (including children's jewelry), mental stimulation, stress relief, or a combination of these purposes, and that contain one or more loose or separable magnets. The NPR proposed a rule to require each loose or separable magnet in a subject magnet product that fits entirely within CPSC's small parts cylinder (described in 16 CFR 1501.4) to have a flux index of less than 50 kG^2 mm^2. Toys that are subject to CPSC's mandatory toy standard in 16 CFR part 1250 are exempt from the proposed rule. The NPR is available at: *https://www.govinfo.gov/content/pkg/FR-2022-01-10/pdf/2021-27826.pdf,* and CPSC staff's briefing package for the NPR is available at: *https://www.cpsc.gov/s3fs-public/Proposed-Rule-Safety-Standard-for-Magnets.pdf?VersionId=2Xizl5izY1OvQRVazWpkqdJHXg5vzRY.*

II. The Public Hearing

The Administrative Procedure Act (5 U.S.C. 551–562) and section 9 of the CPSA require the Commission to provide interested parties with an opportunity to submit ''written data, views, or arguments'' regarding a proposed rule. 5 U.S.C. 553(c); 15 U.S.C. 2058(d)(2). The NPR invited such written comments. In addition, section 9 of the CPSA requires the Commission to provide interested parties ''an opportunity for oral presentation of data, views, or arguments'' 15 U.S.C. 2058(d)(2). The Commission must keep a transcript of such oral presentations. *Id.* In accordance with this requirement, the Commission is providing a forum for oral presentations concerning the proposed standard for magnets.

To request the opportunity to make an oral presentation, see the information under the **DATES** and **ADDRESSES** sections of this notice. Participants should limit their presentations to approximately 10 minutes, excluding time for questioning by the Commissioners or CPSC staff. To avoid duplicate presentations, groups should designate a spokesperson, and the Commission reserves the right to

[1] On February 8, 2022, the Commission voted (4–0) to issue this notice of opportunity for oral presentation of comments.

limit presentation times or impose further restrictions, as necessary.

Alberta E. Mills,

Secretary, Consumer Product Safety Commission.

[FR Doc. 2022–03166 Filed 2–14–22; 8:45 am]

BILLING CODE 6355–01–P

SECURITIES AND EXCHANGE COMMISSION

17 CFR Parts 229, 232, 240, 249, and 274

[Release Nos. 34–93783; IC–34440; File No. S7–21–21]

RIN 3235–AM94

Share Repurchase Disclosure Modernization

AGENCY: Securities and Exchange Commission.

ACTION: Proposed rule.

SUMMARY: The Securities and Exchange Commission is proposing amendments to modernize and improve disclosure about repurchases of an issuer's equity securities that are registered under the Securities Exchange Act of 1934. Specifically, the proposed amendments would require an issuer to provide more timely disclosure on a new Form SR regarding purchases of its equity securities for each day that it, or an affiliated purchaser, makes a share repurchase. The proposed amendments would also enhance the existing periodic disclosure requirements about these purchases.

DATES: Comments should be received on or before April 1, 2022.

ADDRESSES: Comments may be submitted by any of the following methods:

Electronic Comments

- Use the Commission's internet comment form (*https://www.sec.gov/regulatory-actions/how-to-submit-comments*); or

Paper Comments

- Send paper comments to Secretary, Securities and Exchange Commission, 100 F Street NE, Washington, DC 20549–1090.

All submissions should refer to File Number S7–21–21. This file number should be included on the subject line if email is used. To help us process and review your comments more efficiently, please use only one method of submission. The Commission will post all comments on the Commission's website (*http://www.sec.gov/rules/proposed.shtml*). Comments also are available for website viewing and printing in the Commission's Public Reference Room, 100 F Street NE, Washington, DC 20549–1090, on official business days between the hours of 10 a.m. and 3 p.m. Operating conditions may limit access to the Commission's public reference room. All comments received will be posted without change. Persons submitting comments are cautioned that we do not redact or edit personal identifying information from comment submissions. You should submit only information that you wish to make available publicly.

Studies, memoranda, or other substantive items may be added by the Commission or staff to the comment file during this rulemaking. A notification of the inclusion in the comment file of any such materials will be made available on our website. To ensure direct electronic receipt of such notifications, sign up through the ''Stay Connected'' option at *www.sec.gov* to receive notifications by email.

FOR FURTHER INFORMATION CONTACT: Steven G. Hearne, Senior Special Counsel, Office of Rulemaking, at (202) 551–3460, Division of Corporation Finance; and, with respect to the application of the proposal to investment companies, Bradley Gude, Special Counsel, at (202) 551–6792, Investment Company Regulation Office, Division of Investment Management; U.S. Securities and Exchange Commission, 100 F Street NE, Washington, DC 20549.

SUPPLEMENTARY INFORMATION: We are proposing to amend or add the following rules and forms:

Commission reference		CFR citation (17 CFR)
Regulation S–K	Item 10 through 1305	§§ 229.10 through 229.1305.
	Item 601	§ 229.601.
	Item 703	§ 229.703.
Regulation S–T	Rule 10 through 903	§§ 232.10 through 232.903.
	Rule 405	§ 232.405.
Securities Exchange Act of 1934 (Exchange Act) [1].	Proposed Rule 13a–21	§ 240.13a–21.
	Proposed Form SR	
	Form 20–F	§ 249.220f.
	Form N–CSR	§§ 249.331 and 274.128.

Table of Contents

I. Introduction
II. Discussion of Proposed Amendments
A. Proposed Form SR
B. Proposed Revisions to Item 703, Form 20–F, and Form N–CSR
1. Additional Disclosure
2. Clarifying Amendments
C. Structured Data Requirement
III. General Request for Comment
IV. Economic Analysis
A. Baseline and Affected Parties
1. Affected Parties
2. Baseline
B. Benefits
C. Costs
D. Reasonable Alternatives
V. Paperwork Reduction Act
VI. Small Business Regulatory Enforcement Fairness Act
VII. Initial Regulatory Flexibility Analysis
Statutory Authority

[1] 15 U.S.C. 78a *et seq.*

I. Introduction

We are proposing changes to the requirements for disclosure of purchases of equity securities made by or on behalf of an issuer or any affiliated purchaser.[2] Issuers may repurchase their shares through, among other means, open market purchases, tender offers, private negotiated transactions, and accelerated share repurchases. Issuers typically disclose repurchase plans or programs at the time that the share repurchases are authorized by the board of directors. Most share repurchases are executed over time through open market purchases through such share repurchase plans or programs. Issuers are not required to, and typically do not, disclose the specific dates on which they will execute trades pursuant to an announced repurchase plan or program. Investors and other market participants normally do not become aware of an issuer's actual share repurchase-related trading activity until they are reported in an issuer's periodic reports, long after the trades have been executed.

The proposed amendments are intended to improve the quality, relevance, and timeliness of information related to issuer share repurchases. This proposal results from an ongoing, comprehensive evaluation of our disclosure requirements. As part of this evaluation, in April 2016, the Commission issued a Concept Release on the business and financial disclosure required by Regulation S–K, including disclosure pursuant to Item 703.[3]

The Commission adopted Item 703 in 2003 to require disclosure on a quarterly basis of any purchase made by or on behalf of the issuer or any affiliated purchaser of shares or other units of any class of the issuer's equity securities registered under Section 12 of the Exchange Act.[4] The disclosure requirement applies to both open market and private transactions. When it adopted Item 703, the Commission noted that an issuer's stock price often increases following an issuer's public announcement of a repurchase plan or program and that some issuers publicly announce repurchase programs, but do not actually purchase any securities or purchase only a small portion of the announced amount.[5] The Commission concluded that disclosure of an issuer's actual purchases would inform investors whether, and to what extent, the issuer had followed through on its original plan.[6]

Currently, Item 703 share repurchase disclosure is required in Form 10–Q (17 CFR 249.308a) for the issuer's first three fiscal quarters and in Form 10–K (17 CFR 249.310) for the issuer's fourth quarter.[7] The same disclosure is required in Form 20–F on an annual basis for foreign private issuers and in Form N–CSR on a semi-annual basis for certain closed-end funds. In particular, Item 9 of Form N–CSR implements the requirements of Item 703 for certain registered closed-end investment management companies (''registered closed-end funds''), varying from Item 703 only to account for the different reporting period covered by Form N–CSR.[8] Similarly, Item 16E of Form 20–F applies the Item 703 requirements to foreign private issuers.[9] Accordingly, unless the context otherwise requires, references in this release to ''Item 703'' should be read to include these parallel provisions of Form N–CSR and Form 20–F.

More specifically, Item 703 currently requires an issuer to disclose in tabular format:

- The total number of shares (or units) purchased, regardless of amount and regardless of whether made pursuant to a publicly announced plan or program, by the issuer or any affiliated purchaser during the relevant period, reported on a monthly basis and by class, including footnote disclosure regarding the number of shares purchased other than through a publicly announced plan or program and the nature of the transaction;
- The average price paid per share (or unit);
- The total number of shares (or units) purchased as part of a publicly announced repurchase plan or program; and
- The maximum number (or approximate dollar value) of shares (or units) that may yet be purchased under the plans or programs.

Item 703 also requires footnote disclosure in the aggregate of the principal terms of all publicly announced repurchase plans or programs, including:

- The date each plan or program was announced;
- The dollar amount (or share or unit amount) approved;
- The expiration date (if any) of each plan or program;
- Each plan or program that has expired during the period covered by the table; and
- Each plan or program the issuer has determined to terminate prior to expiration, or under which the issuer does not intend to make further purchases.

We recognize that there are a number of reasons that issuers conduct share repurchases and that share repurchases can have a positive or negative impact on the market for an issuer's securities. The high dollar volume, nearly $700 billion in 2020, of recent share repurchase activity has been accompanied by public interest in corporate payouts in the form of share repurchases.[10] Various studies address motivations behind corporate payouts and the choice of the form of payout (repurchases or dividends).[11]

Some studies have found that issuers often use repurchases in a manner aligned with shareholder value maximization, such as to offset share dilution after new stock is issued, to facilitate stock- and stock option-based employee compensation programs, to help signal the issuer's view that its stock is undervalued, or because the issuer's board has otherwise determined that a repurchase program is a prudent use of the issuer's excess cash.[12]

Other observers, however, have expressed concerns about issuers' uses of share repurchases. Some research has

[2] For purposes of this release, the term ''issuer'' includes affiliated purchasers and any person acting on behalf of the issuer or an affiliated purchaser. The term ''affiliated purchaser'' as used in Item 703 is defined in 17 CFR 10b–18(a)(3). References throughout this release to ''issuer repurchases'' include purchases by affiliates of the issuer and purchases by any person acting on behalf of the issuer or an affiliated purchaser.

[3] *See Business and Financial Disclosure Required by Regulation S–K,* Release No. 33–10064 (Apr. 13, 2016) [81 FR 23915 (Apr. 22, 2016)] (''Concept Release''). The release requested comment on, among other things, whether Item 703 disclosure is important to investors, whether the Commission should require more granular or more frequent repurchase disclosure, and whether there should be a *de minimis* monetary threshold for disclosure. We received approximately 30 comment letters that addressed Item 703 and we discuss these comments throughout this release, where relevant.

[4] *See Purchases of Certain Equity Securities by the Issuer and Others,* Release No. 33–8335 (Nov. 10, 2003) [68 FR 64952 (Nov. 17, 2003)] (''Adopting Release'').

[5] *Id.* at 64963.

[6] *Id.*

[7] Certain information regarding share repurchases is also required to be disclosed in an issuer's financial statements, including in the statements of cash flows indicating the amount of cash paid for repurchased securities and the statements of changes in shareholders' equity indicating any reduction in securities outstanding and additional paid-in capital for the securities repurchased. If securities are repurchased for purposes other than retirement, or if ultimate disposition has not yet been decided, the amount and cost of the repurchased securities may be shown separately on the balance sheets and statements of changes in shareholders' equity as a deduction from the total of securities, additional paid-in capital, and retained earnings.

[8] *See* Adopting Release at 64963.

[9] *See* Adopting Release at 64962.

[10] *See* Section IV.A.2, *infra* and note 60 and accompanying text.

[11] *See* Section IV.A., *infra* for a more detailed discussion of the various studies.

[12] *See* Section IV.A.2, *infra.*

shown that repurchases can serve as a form of real earnings management (through decreasing the denominator of earnings-per-share (''EPS'')) and thus be subject to short-term earnings management objectives of an executive seeking to meet or beat consensus forecasts.[13] In addition, because announcements of repurchases and actual repurchase trades can also effect short-term upward price pressure, share price- or EPS-tied compensation arrangements could incentivize executives to undertake repurchases in an attempt to maximize their compensation.[14] Several commentators have highlighted what they viewed to be the opportunistic and harmful use of issuer share repurchases by issuer insiders.[15] Some of these commentators view issuer share repurchases as a tool to raise the price of an issuer's stock in a way that allows insiders and senior executives to extract value from the issuer instead of using the funds to invest in the issuer and its employees.[16] A further concern raised by some commentators is the potential for share repurchases to be used by issuers as a mechanism to inflate the compensation of their executives in a manner that is not transparent to investors or the market.[17] In addition, a number of commenters recommended expanding the disclosure required by Item 703 in response to the Commission's request for comments regarding Item 703 in the Concept Release.[18] Some commenters also supported increasing the frequency of reporting share repurchases.[19]

We also received a rulemaking petition expressing general support for the current regulatory regime for issuer share repurchases, but recommending revisions to the Commission's executive compensation disclosure requirements to require disclosure of whether issuer share repurchases have affected the calculation of the repricing of any options, stock appreciation rights, or option-like instruments.[20]

In light of the growth of issuer share repurchase plans in recent years and the concerns expressed by commentators, we believe investors could benefit from improving the quality, relevance, and timeliness of information related to issuer share repurchases. In particular, we are concerned that, because issuers are repurchasing their own securities, asymmetries may exist between issuers and affiliated purchasers and investors with regard to information about the issuer and its future prospects. This, in turn, could exacerbate some of the potential harms associated with issuer repurchases. To help address these information asymmetries, we are proposing a new disclosure form and additional disclosure requirements about issuer repurchases.[21]

The proposed amendments would require more detailed and more frequent disclosure about issuer share repurchases, and require issuers to present the disclosure using a structured data language, which could allow investors to:

- Better understand the extent of an issuer's activity in the market, including potential impacts on the issuer's share price;
- Better understand an issuer's motivation for its share repurchases, and how it is executing its purchase plan; and
- Gain potential insight into any relationship between share repurchases and executive compensation and stock sales.

The proposed amendments could also improve the ability of investors to identify repurchases that are more likely to be driven by managerial self-interest (*e.g.,* increasing the share price prior to an insider's sale, meeting a threshold in an executive compensation arrangement, or meeting consensus earnings forecast) and thereby promote investor protection.

II. Discussion of Proposed Amendments

We are proposing to modernize and improve the disclosure required about

[13] For evidence on the use of repurchases as a method of real earnings management, *see infra* note 79. *See also* Rulemaking Petition 4–746 (June 25, 2019), Rulemaking Petition Requesting Repeal and Reform of Rule 10b–18 to Address Manipulative Repurchase Programs that Harm Workers, *available at https://www.sec.gov/rules/petitions/2019/petn4-746.pdf,* at 4 (expressing concern that repurchases can be used to inflate share price and EPS-linked executive compensation) (''Rulemaking Petition 4–746'').

[14] *See, e.g.,* Chan, K., Ikenberry, D., Lee, I., & Wang. Y., *Share Repurchases as a Potential Tool to Mislead Investors,* 16 Corp. Fin. 137 (2010) (''Chan et al. (2010)'') (finding in 1980–2000 data that a limited number of managers may have used repurchases in a misleading way as ''cheap talk''). For a discussion of the use of repurchases to influence compensation tied to per-share measures, *see infra* note 81.

[15] *See infra* note 82; Jackson, Jr., R.J., *Stock Buybacks and Corporate Cashouts,* Speech by Commissioner Jackson Before the Center for American Progress (June 11, 2018), *available at https://www.sec.gov/news/speech/speech-jackson-061118* (''Jackson Speech''); *https://www.cnbc.com/2021/03/02/elizabeth-warren-rips-stock-buybacks-as-nothing-but-paper-manipulation.html* (''Warren article'') (expressing Senator Warren's view that share repurchases increase the price of an issuers shares through the issuer's purchase of its securities on the market rather than investing in the issuer's business); Palladino, L., *Do Corporate Insiders Use Stock Buybacks for Personal Gain?,* 34(2) Int'l Rev of Applied Econ. 152–174 (2020) (''Palladino (2020)'') (finding increased insider selling in quarters where buybacks are occurring); and Palladino, L. & Lazonick, W., *Regulation Stock Buybacks: The $6.3 Trillion Question,* Roosevelt Institute Working Paper (May 2021), *available at https://rooseveltinstitute.org/publications/regulating-stock-buybacks-the-6-3-trillion-question/* (''Regulation Stock Buybacks Article''). *See also* Fried, J.M., *Testimony of Jesse M. Fried on Stock Buybacks before the U.S. House of Representatives Subcommittee on Investor Protection, Entrepreneurship, and Capital Markets* (Oct, 17, 2019) available at SSRN: *https://ssrn.com/abstract=3474175* (''Fried Testimony'').

[16] *See, e.g.,* Warren Article; and Lazonick, W., *Clinton's Proposals on Stock Buybacks Don't Go Far Enough,* Harvard Business Review (Aug. 11, 2015) *available at https://hbr.org/2015/08/clintons-proposals-on-stock-buybacks-dontgo-far-enough.*

[17] *See, e.g.,* Jackson Speech; Regulation Stock Buybacks Article; and Fried Testimony. Fried asserted that executives may use repurchases to enrich themselves at the expense of public investors by: Conducting a share repurchase when the issuer's stock price is lower than the ''stock's actual stock value,'' resulting in a value transfer from selling shareholders to non-selling shareholders pro rata; the manipulation of the stock price and earnings metrics in compensation arrangements; or repurchase announcements made solely to boost the stock price before sales by executives.

[18] *See, e.g.,* letters in response to the Concept Release from SEC Investor Advisory Committee (Jun. 15, 2016); Council of Institutional Investors (Jul. 8, 2016) (''CII''); W. Klein and T. Amy (Jul. 19, 2016) (''Klein & Amy''); Domini Social Investments (Jul. 21, 2016) (''Domini''); California State Teachers' Retirement System (Jul. 21, 2016) (''CalSTRS''); American Federation of State, County and Municipal Employees (Jul. 21, 2019) (''AFSCME''); AFL–CIO (Jul. 21, 2016) (''AFL–CIO''); California Public Employees' Retirement System (''CalPERS'') (Jul. 19, 2016); Better Markets, Inc. (Jul. 21, 2016) (''Better Markets''); and Americans for Financial Reform (Aug. 10, 2016) (''AFR''). Other commenters, however, opposed expanding the disclosure required by Item 703. *See, e.g.,* letters in response to the Concept Release from U.S. Chamber of Commerce (Jul. 20, 2016) (''Chamber''); FedEx Corporation (Jul. 21, 2016) (''FedEx''); Business Roundtable (Jul. 21, 2016); Securities Industry and Financial Markets Association (Jul. 21, 2016) (''SIFMA''); Fenwick West LLP (Aug. 1, 2016) (''Fenwick''); General Motors Company (Sept. 30, 2016) (''GM''); and Financial Executives International (Oct.3, 2016) (''FEI'').

[19] *See, e.g.,* letters in response to the Concept Release from Klein & Amy; and AFR. *See also* letter in response to the Concept Release from CalPERS supporting disclosure on Form 8–K of significant equity repurchases. Other commenters, however, supported maintaining the current frequency of reporting share repurchases on a quarterly basis. *See, e.g.,* letters in response to the Concept Release from Chamber; SIFMA; and Fenwick.

[20] *See* Rulemaking Petition 4–772 (Apr. 21, 2021), Request to Amend Regulation S–K (17 CFR 229.402(d), instruction (7)), *available at https://www.sec.gov/rules/petitions/2021/petn4-772.pdf* (recommending revisions to 17 CFR 229.402(d), instruction 7). We believe that the additional information relating to share repurchases that we are proposing would help meet the goals of the rulemaking petition by better enabling investors to determine whether issuer repurchases trigger higher payments to senior executives under performance-based compensation plans, such as by altering earnings per share calculations.

[21] In a separate release, we are proposing several rules and form amendments to address potentially abusive practices associated with 17 CFR 240.10b5–1 (''Rule 10b5–1'') trading arrangements, grants of options and other equity instruments with similar features and the gifting of securities. *See* Release No. 33–11013 Rule 10b5–1 and Insider Trading (Jan. 13, 2022) (''Rule 10b5–1 Proposing Release'').

repurchases of an issuer's equity securities by:

- Requiring daily repurchase disclosure on a new Form SR, which would be furnished to the Commission one business day after execution of an issuer's share repurchase order;
- Amending Item 703 to require additional detail regarding the structure of an issuer's repurchase program and its share repurchases; and
- Requiring information disclosed pursuant to Item 703 of Regulation S–K and pursuant to Form SR to be reported using a structured data language (specifically, Inline eXtensible Business Reporting Language or ''Inline XBRL'').

A. Proposed Form SR

We are proposing new Exchange Act Rule 13a–21 and Form SR that would require an issuer, including a foreign private issuer and certain registered closed-end funds, to report any purchase made by or on behalf of the issuer or any affiliated purchaser of shares or other units of any class of the issuer's equity securities that is registered by the issuer pursuant to Exchange Act Section 12.[22] The issuer would have to furnish a new Form SR before the end of the first business day following the day on which the issuer executes a share repurchase.[23] The Form SR would require the following disclosure in tabular format, by date, for each class or series of securities:

(1) Identification of the class of securities purchased;

(2) The total number of shares (or units) purchased, including all issuer repurchases whether or not made pursuant to publicly announced plans or programs;

(3) The average price paid per share (or unit);

(4) The aggregate total number of shares (or units) purchased on the open market;

(5) The aggregate total number of shares (or units) purchased in reliance on the safe harbor in 17 CFR 240.10b–18 (''Rule 10b–18''); and

(6) The aggregate total number of shares (or units) purchased pursuant to a plan that is intended to satisfy the affirmative defense conditions of Rule 10b5–1(c).[24]

When adopting the Item 703 disclosure requirements, the Commission stated its belief that information about the equity securities an issuer has repurchased is important to investors.[25] The Commission also stated its belief that Item 703 would provide investors and the marketplace with information regarding an issuer's repurchase activity that would allow them to assess the impact of an issuer's share repurchases on the issuer's stock price, similar to periodic disclosure of issuer earnings and dividend payouts.[26] While we continue to believe that the existing Item 703 requirements provide useful information,[27] we believe that proposed Form SR could enhance transparency and enable more timely investor review of issuer share repurchases. Proposed Form SR would require issuer share repurchases to be reported on a daily basis before the end of the first business day following the day on which the repurchase transaction has been executed. Investors could use this more detailed and timely disclosure to monitor and evaluate issuer share repurchases, and their effects on the market for the issuer's securities.

The data currently required to be disclosed under Item 703 does not provide daily detail about such repurchases. Information asymmetries may exist between issuers and affiliated purchasers and investors, particularly due to the timing of the current Item 703 disclosures.[28] Because issuers are repurchasing their own securities, issuers and affiliated purchasers will typically have significantly more, and more detailed, information about the issuer and its future prospects. Proposed Form SR could provide investors with additional insight into the details of a share repurchase closer in time to the repurchase, which may diminish any informational asymmetry due to the timing of current Item 703 disclosure.

Generally, there are legitimate business reasons for issuers to repurchase securities; nevertheless, incentives also exist for issuers to engage in opportunistic share repurchases. For example, as noted above, some commentators have asserted that issuer repurchases could potentially be used to increase share prices in order to enhance executive compensation and insider stock value.[29] The share price increase that often occurs in connection with an issuer share repurchase plan may raise certain financial ratios, such as EPS, that are often used as executive compensation targets.[30] Proposed Form SR, when combined with other information available about the issuer, could provide investors with additional insight into such possible behavior.

We are therefore proposing that Form SR include daily disclosure of the total number of shares purchased, class of securities, and the average price paid per share (or unit)[31] as well as the aggregate total number of shares

[22] 15 U.S.C. 78*l*. Registered investment companies other than registered closed-end funds are not required to provide the repurchase disclosure under Item 703 (as implemented in Form N–CSR). Accordingly, proposed Form SR also would not be filed by registered investment companies other than registered closed-end funds. *See* proposed rule 13a–21(b). Business development companies (''BDCs''), which are not registered investment companies, provide the repurchase disclosure of Item 703 on Forms 10–K and 10–Q rather than Form N–CSR.

[23] ''Execution'' has a commonly understood meaning consistent with the Commission's explanation in *Interpretation of Section 206(3) of the Investment Advisers Act of 1940,* Release No. IA–1732, (July 17, 1998) [63 FR 39505 (July 23, 1998)] that the ''ending point of a transaction is when the actual exchange of securities and payment occurs, which is known as 'settlement.' The date of execution (*i.e.,* the trade date) marks an earlier point of a securities transaction at which the parties have agreed to its terms and are contractually obligated to settle the transaction.'' Release No. IA–1732 at notes 13–14 and accompanying text (citing *Radiation Dynamics, Inc.* v. *Goldmuntz,* 464 F.2d 876, 891 (2d Cir. 1972) with the explanation that the ''court held that, for purposes of insider trading liability under Rule 10b–5 under the Exchange Act, the time of a 'purchase or sale' of securities is determined by reference to when the parties are obligated to perform the terms of the transaction, not when final performance occurs.''). Similarly, in the security-based swaps context, 17 CFR 240.15Fi–1(f) defines ''execution'' as ''the point at which the counterparties become irrevocably bound to a transaction under applicable law.''

[24] The Commission adopted Rule 10b5–1 in 2000 to clarify the meaning of ''manipulative or deceptive device[s] or contrivance[s]'' prohibited by Exchange Act Section 10(b) and Rule 10b–5 with respect to trading on the basis of material nonpublic information. *See Selective Disclosure and Insider Trading,* Release No. 33–7881 (Aug. 15, 2000) [65 FR 51716 (Aug. 24, 2000)]. Rule 10b5–1(c) established an affirmative defense to Rule 10b–5 liability for insider trading in circumstances where it is clear that the trading was not based on material nonpublic information and the trade was pursuant to a binding contract, an instruction to another person to execute the trade for the instructing person's account, or a written plan.

[25] *See* Adopting Release at 64962.

[26] *Id.*

[27] *See, e.g.,* Bonaimé, A., *Mandatory Disclosure and Firm Behavior: Evidence from Share Repurchases,* 90 Acct. Rev. 1333 (2015) (''Bonaimé (2015)'') (stating that ''[a]nalysts and investors alike are concerned with properly estimating repurchases since actual repurchase activity is linked to future operating and stock price performance'').

[28] One commentator emphasized the need to regulate consistently economically equivalent practices. *See* Grullon, G. & Ikenberry, D., *What Do We Know About Stock Repurchases,* J. App. Corp. Fin. 13 (2000) at 48 (referring to the requirement that a Form 4 Statement of Changes of Beneficial Ownership of Securities (17 CFR 249.104) be filed before the end of the second business day following the day on which a transaction resulting in a change in beneficial ownership has been executed). *See also* Fried Testimony (proposing a two-day disclosure rule, but suggesting that even more frequent disclosure would be preferable).

[29] *See supra* notes 16 and 17.

[30] *Id. See also* notes 80, 81, and 83, *infra.*

[31] The total number of shares purchased, class of securities, and the average price paid per share (or unit) correspond to information that is currently disclosed pursuant to Item 703.

purchased on the open market, the aggregate total number of shares purchased in reliance on the safe harbor in Rule 10b–18,[32] and the aggregate total number of shares purchased pursuant to a plan that is intended to satisfy the affirmative defense conditions of Rule 10b5–1(c), to enhance the repurchase information that would be available to investors. Requiring disclosure of the number of shares purchased on the open market would provide a clearer indication of the scale of the issuer's activity in the market for each day that repurchases are made. Requiring disclosure of the number of shares purchased in reliance on the non-exclusive safe harbor in Rule 10b–18 [33] and pursuant to a plan that is intended to satisfy the affirmative defense conditions of Rule 10b5–1(c) could also enable investors to better understand how an issuer has structured its repurchase activity.

We are proposing to require issuers to furnish Form SR no later than one business day after execution of the issuer's share repurchase transaction order. The proposed daily detail would provide more granular information to investors that could enable them to better evaluate the market for the issuer's securities and the actions of the issuer's insiders. For example, when combined with existing executive compensation, Section 16 (15 U.S.C. 78p), and financial statement disclosures, the proposed Form SR disclosures may improve the ability of investors to identify issuer repurchases potentially driven by managerial self-interest, such as seeking to increase the share price prior to an insider sale [34] or to change the value of an option or other form of executive compensation.[35]

The proposed requirement to furnish the daily detail in Form SR on the Commission's Electronic Data Gathering, Analysis, and Retrieval (''EDGAR'') system no later than one business day after execution of the share repurchase order could help alleviate information asymmetries and promote more informed investment decisions. Under the current rules, Item 703 disclosure about share repurchases is required in an issuer's periodic reports.[36] As noted above, some have expressed concern about the timeliness of this disclosure and the asymmetry of information available to the market while issuers are conducting share repurchase programs.[37] While existing Item 703 disclosure provides investors and market participants with a general understanding of issuer share repurchases over time, the disclosure relates to repurchases made several weeks or months earlier, resulting in a delay in such information being relayed to investors and absorbed by the market. This delay could contribute to an information asymmetry between the issuer and investors.

Several commenters on the Concept Release asked the Commission to require disclosure closer in time to share repurchases.[38] We additionally note that the disclosure deadlines for share repurchases in several foreign jurisdictions are shorter than in the U.S. For example, the Financial Conduct Authority in the United Kingdom and the Australian Securities Exchange provide listing standards requiring certain issuers to disclose share repurchases on the next business day.[39] In addition, to the extent a foreign private issuer files public reports pursuant to its home country requirements with respect to share repurchases, some of these issuers file those reports on 17 CFR 249.306 (''Form 6–K'') where the issuer deems those reports material to investors.

While we are proposing that issuers provide this new daily detail disclosure one business day after execution of a share repurchase order, we recognize that the repurchases may not finally settle until two business days after the transaction.[40] However, we believe that issuers generally have access to details regarding their purchase orders that have been executed and that these executed orders typically are confirmed and accurately cleared and settled.[41] The proposed amendments would require an issuer to disclose material errors or changes to information previously reported on an amended Form SR. We believe that this provision would allow for timely and accurate disclosure the day after execution of the share repurchase order, with the ability to make corrections, if needed, in amended filings.

We are proposing to require issuers to furnish, rather than file, Form SR. As a result, issuers would not be subject to liability under Section 18 of the Exchange Act for the disclosure in the form, and the information would not be deemed incorporated by reference into filings under the Securities Act and thus would not be subject to liability under Section 11 of the Securities Act, unless the issuer expressly incorporated such information.[42] We believe that deeming the information provided on Form SR to be furnished rather than filed would alleviate some of the concerns about requiring this disclosure within a shorter timeframe without undermining the transparency objectives of the proposed disclosures.

Request for Comment

1. Should we adopt new Form SR to require daily repurchase disclosure, as proposed? Would less frequent disclosure of daily share repurchases (*e.g.,* weekly, monthly, or quarterly disclosure) provide sufficiently timely information about issuer repurchases? Would less detailed disclosure (*e.g.,* aggregated disclosure of repurchases on a weekly or monthly basis, rather than

[32] The proposed disclosure would not provide a defense to manipulative conduct for purchases that are not in fact eligible to rely on the safe harbor.

[33] Rule 10b–18, which was adopted in 1982 and amended in 2003, provides a voluntary, non-exclusive ''safe harbor'' from liability for manipulation under Sections 9(a)(2) and 10(b) of the Exchange Act, and Rule 10b–5, when an issuer or its affiliated purchaser bids for or purchases shares of the issuer's common stock in accordance with the Rule 10b–18's manner, timing, price, and volume conditions. *See* Adopting Release. *See also Purchases of Certain Equity Securities by the Issuer and Others; Adoption of Safe Harbor,* Release No. 34–19244 (Nov. 17, 1982), [47 FR 53333 (Nov. 26, 1982)].

[34] *See* note 80 *infra* and accompanying discussion.

[35] *See* note 79 *infra* and accompanying discussion. In this regard, we note that share price- or earnings per share-tied compensation arrangements could incentivize executives to undertake repurchases, in an attempt to maximize their compensation.

[36] For domestic issuers, this disclosure is required quarterly. However, for registered closed-end funds the disclosure is made semi-annually and for foreign private issuers is included in their annual reports. *See supra* note 8 and accompanying text.

[37] *See* discussion in Section I.

[38] *See, e.g.,* letters in response to the Concept Release from Klein & Amy (recommending Form 8–K disclosure); CalPERS (recommending Form 8–K disclosure of significant repurchases in line with other significant corporate events); and AFR (recommending disclosure at the time the repurchase occurs because that is the time that any price manipulation would be occurring). *But see, e.g.,* letters in response to the Concept Release from Chamber; FedEx; SIFMA; Fenwick; GM; FEI (supporting the current frequency of share repurchases).

[39] *See, e.g.,* Australian Securities Exchange Listing Rule 3.8A requiring listed issuers to file a notification disclosing acquisitions before the commencement of trading on the business day after any day on which shares are bought back; and Financial Conduct Authority (United Kingdom) Listing Rule 12.4.6R requiring certain issuers to file a notification disclosing acquisitions no later than 7:30 a.m. on the business day following the day that the purchase occurred. *See also* Ontario Securities Commission (Canada) National Instrument 55–104 requiring certain issuers to file an insider trading report disclosing acquisition within 10 days of the end of the month.

[40] *See* 17 CFR 240.10b–10.

[41] *See supra* note 23.

[42] In addition, by requiring the Form SR to be furnished, a late submission of the form would not affect eligibility to use Form S–3 or to file a short-form registration statement under General Instruction A.2 of Form N–2. General Instruction I.A.3(b) to Form S–3 requires that all reports required to be filed with the Commission during the preceding 12 months have been filed; the same requirements apply under General Instruction A.2 of Form N–2.

daily), that is furnished more frequently than under current Item 703, provide sufficiently useful disclosure? Instead of adopting Form SR, should we amend Form 8–K or another existing form to require daily repurchase disclosure?

2. Should we instead require an issuer to disclose its share repurchase program and continue to report actual share repurchases on a periodic basis? If so, should we require the issuer to disclose its planned share repurchases at least 30 days prior to the first repurchase transaction? Would a different disclosure deadline be more appropriate? Should the disclosure specify the amount of securities that may be purchased or any additional information? How would the burden of complying with such requirements compare with the burdens of complying with proposed Form SR? In reporting actual share repurchases under this approach, should we require the periodic disclosure to be broken out on a monthly basis, as currently required under Item 703 of Regulation S–K, Item 16E of Form 20–F, and Item 9 of Form N–CSR, or should we expand the disclosure to require a breakout of repurchase activity on a more frequent basis?

3. Should we amend issuers' exhibit filing requirements to require issuers to provide daily, weekly, or biweekly repurchase disclosure in an exhibit to the issuer's periodic reports? If so, should such an exhibit requirement be in lieu of or in addition to reporting on Form SR?

4. Should we require disclosure of executed share repurchase orders on Form SR, as proposed? Are there concerns that executed orders may fail to settle and that issuers would not be able to accurately disclose the shares purchased on the next business day? How frequently do executed orders fail to clear and settle? Should we base the requirement on something other than order execution? For example, should we require issuers to furnish Form SR within one business day after the order clears and settles and the issuer receives trade confirmation?

5. Should we require an issuer to furnish disclosure on Form SR within one business day of execution of a share repurchase order, as proposed? Would issuers have sufficient time to prepare and furnish such disclosure? If not, how long should an issuer have to furnish Form SR? How would a longer time period to furnish Form SR impact the costs associated with preparing the disclosures and the benefits to investors of more timely disclosure? Would a longer period compared to the proposal (*e.g.,* two days, five days, ten days or more) still provide timely information about issuer repurchases? Would the proposed deadline for furnishing Form SR negatively impact issuers' ability to effectively conduct share repurchases, such as by increasing the price issuers may have to pay to repurchase their securities?

6. As discussed above, proposed Form SR would require daily reporting of the total number of shares repurchased, the average price paid per share, issuer share repurchases on the open market, shares purchased in reliance on the safe harbor in Rule 10b–18, and shares purchased pursuant to a plan that is intended to satisfy the affirmative defense conditions of Rule 10b5–1(c). Should we adopt these Form SR disclosure requirements, as proposed? Should we eliminate or modify any of these requirements? Should we add any disclosure requirements to Form SR, such as disclosure of the highest and lowest price paid per share for open market purchases or any other information?

7. Should we require issuers to furnish an amended Form SR to correct material changes to transactions previously reported on Form SR, as proposed? Alternatively, should we require all corrections to be made on an amended Form SR, regardless of materiality?

8. We have proposed that foreign private issuers would have the same Form SR filing obligations as domestic issuers. Should we exempt all foreign private issuers from the requirement to file a Form SR or provide different requirements? We note that some foreign private issuers are required to provide daily detailed disclosure in their home jurisdictions. To the extent these issuers file public reports pursuant to their home country requirements with respect to share repurchases, some also file those reports under Form 6–K where the issuer deems those reports material to investors. Should we exempt these foreign private issuers from the Form SR requirement?

9. Should we exempt or provide different requirements for registered closed-end funds from the Form SR requirements? Those funds already provide share repurchase disclosure less frequently than most other issuers subject to the disclosure requirement in that they disclose the information semi-annually rather than quarterly. Would less frequent disclosure continue to be appropriate for these issuers or, conversely, would investors benefit from the more frequent disclosure on Form SR? Alternatively, because the proposal would only apply to issuers with securities registered pursuant to Section 12 of the Exchange Act, it would only apply to those registered closed-end funds with securities that trade on an exchange. Should we expand the scope of covered registered closed-end funds to more closely match the scope of corporate issuers subject to repurchase disclosure requirements by applying the requirements to registered closed-end funds that would be subject to Section 12(g) of the Exchange Act but for Section 12(g)(2)(B) (15 U.S.C. 78l(g)(2)(B)), which exempts them from the requirement to register their securities under that section unless they are listed on an exchange?

10. We have observed that smaller issuers generally conduct fewer issuer share repurchases, but that smaller issuers tend to trade in less liquid markets where share repurchases may have more pronounced impacts. Should we consider an exemption from the proposed Form SR reporting requirement for non-accelerated filers, smaller reporting companies, or emerging growth companies?

11. Should we provide a *de minimis* exception to the Form SR reporting requirement for share repurchases that are below a certain level? Should any such threshold be based on a dollar threshold, share number, a percentage of public float, or another metric? If so, what level would be appropriate and why?

12. Should we require that Form SR be furnished, as proposed? Alternatively, should we require the form to be filed? Should a late or missing Form SR filing affect an issuer's Form S–3 eligibility or eligibility to file a short-form registration statement on Form N–2? Alternatively, would extending the timeframe for providing Form SR (*e.g.,* to one day after settlement, or two or more business days after order execution) alleviate concerns such that we should require the Form SR to be filed rather than furnished? As proposed, Form SR would be furnished to the Commission, but the Item 703 disclosure would be filed as part of the periodic report. Should repurchase information in the Form SR be subject to different liability than disclosure in issuer periodic reports?

B. Proposed Revisions to Item 703, Form 20–F, and Form N–CSR

We are proposing to revise and expand the disclosure requirements in Item 703, Form 20–F, and Form N–CSR to work in conjunction with proposed Form SR to provide investors with more detailed and timely information they can use to evaluate issuer share repurchases.

1. Additional Disclosure

We are proposing to revise Item 703, with corresponding changes to Form 20–F and Form N–CSR, to require additional disclosure about an issuer's share repurchases. Specifically, we propose to require an issuer to disclose:

- The objective or rationale for its share repurchases and process or criteria used to determine the amount of repurchases;
- Any policies and procedures relating to purchases and sales of the issuer's securities by its officers and directors during a repurchase program, including any restriction on such transactions;
- Whether it made its repurchases pursuant to a plan that is intended to satisfy the affirmative defense conditions of Rule 10b5–1(c), and if so, the date that the plan was adopted or terminated; and
- Whether purchases were made in reliance on the Rule 10b-18 non-exclusive safe harbor. We are additionally proposing to require that issuers disclose if any of their officers or directors subject to the reporting requirements under Section 16(a) of the Exchange Act (15 U.S.C. 78p(a)) purchased or sold shares or other units of the class of the issuer's equity securities that is the subject of an issuer share repurchase plan or program within 10 business days before or after the announcement of an issuer purchase plan or program by checking a box before the tabular disclosure of issuer purchases of equity securities.

In response to the Commission's request for comments regarding Item 703 in the Concept Release, many commenters recommended expanding the disclosure required by Item 703.[43] Some of these commenters specifically supported requiring disclosure of the objective or rationale for repurchases.[44] As noted above, other commentators have expressed concern that issuer share repurchases may be used to inflate executive compensation and cash out executives' securities.[45]

Based on these comments and concerns, we are proposing additional disclosure requirements intended to improve investor access to information regarding the rationale and objectives of any issuer repurchase plan. In addition, the proposed disclosure regarding whether the plan is expected to be in reliance on the Rule 10b–18 safe harbor or pursuant to a Rule 10b5–1 plan, as well as disclosures regarding any policies and procedures (including any restrictions) relating to purchases and sales imposed on officers and directors during a repurchase plan, should allow investors to better understand how an issuer has structured its repurchase plan and whether it has taken steps to prevent officers and directors from potentially benefiting from issuer repurchases in a manner that is not available to regular investors. Similarly, the proposed checkbox will obviate the need for investors to review Section 16(a) filings close in time to any announcement of an issuer purchase plan or program to see if any officer or director reporting pursuant to Section 16(a) of the Exchange Act has purchased or sold shares or other units of the class of the issuer's equity securities that is the subject of an issuer share repurchase plan or program close in time to the announcement. Together with the additional daily level detail that we are proposing to require on Form SR, we believe this additional information would help investors to assess whether the issuer or its insiders are potentially engaged in self-interested or otherwise inefficient repurchases and thereby help mitigate some of the potential harms associated with issuer repurchases.

Request for Comment

13. Many issuers voluntarily choose to announce their share repurchase plans or programs publicly. Item 703 currently requires disclosure of the date each plan or program was announced if the issuer did publicly announce it. Should we clarify what constitutes an announcement for purposes of the disclosure requirement? For example, should the announcement have to have been made in a Form 8–K, another existing form, or press release? Should we require all open market share repurchase plans to be publicly announced?

14. We have proposed requiring issuers to indicate via the proposed checkbox if any officer or director reporting pursuant to Section 16(a) of the Exchange Act purchased or sold the issuer's equity securities that are the subject of an issuer share repurchase plan or program within 10 business days before or after any announcement of an issuer purchase plan or program. How would investors use this information? Would the proposed requirement discourage issuers from publicly announcing plans or programs? Is there other information in combination with, or instead of, this disclosure that could notify investors and help them process information regarding officer and director transactions made close in time to the issuer's share repurchase plan announcement? If an issuer doesn't publicly announce its repurchase plan, should the issuer be required to check the box if there are officer or director transactions within a certain time from the initiation of the repurchase plan or program (for example, within 10 business days of initiation)?

15. Is a 10-business-day period before or after the announcement an appropriate window for the proposed indication about officer and director transactions? Would a shorter or longer period provide more appropriate notice to investors and cover a sufficient time period where an insider may be most likely to trade in relation to the issuer's announcement of a share repurchase plan? Should we add a proposed checkbox to Form SR, in lieu of or in addition to Item 703, Form 20–F, and Form N–CSR?

16. Issuers would need to rely on representations from, or Section 16 reports filed by, their officers and directors to indicate whether any officer or director has purchased or sold the issuer's securities in the relevant time period. Should we provide guidance about the issuer's scope of inquiry and explain what an issuer may rely on for purposes of complying with the checkbox requirement?

17. Should we require issuers to describe the objective or rationale for their share repurchases and process or criteria used to determine the amount of repurchases, as proposed? How would investors use this information? Should we also require information regarding how share repurchases are financed or their anticipated or actual impact on leverage ratios or the cost of capital? Should we ask issuers to disclose if they specifically considered other uses for the funds being used for the share repurchase? Is there additional disclosure regarding the reasons for, or expected effects of a share repurchase plan that should be required? Would this proposed requirement result in boilerplate disclosure?

18. Proposed Item 703 and proposed Form SR would require issuers to disclose whether repurchases were made pursuant to a plan that is intended to satisfy the affirmative defense conditions of Rule 10b5–1(c). Does the proposal require an appropriate level of

[43] *See, e.g.,* letters in response to the Concept Release from CII; Domini; CalSTRS; AFSCME; AFL–CIO; CalPERS; and Better Markets. Other commenters, however, opposed expanding the disclosure required by Item 703. *See, e.g.,* letters in response to the Concept Release from Chamber; FedEx; Business Roundtable (Jul. 21, 2016); SIFMA; Fenwick; GM; and FEI.

[44] *See, e.g.,* letters in response to the Concept Release from Klein & Amy; Domini; CalSTRS; AFL–CIO; CalPERS (indicating that more detailed disclosure of the issuer's share repurchase plan would enable analysis in light of the short and long-term ramifications of the repurchase).

[45] *See* discussion in Section I.

detail regarding Rule 10b5–1 plans? Should this disclosure additionally contemplate repurchases made pursuant to ''other pre-arranged trading plans'' that issuers may seek to rely on in lieu of Rule 10b5–1 plans? How should we define ''other pre-arranged trading plans'' in this circumstance? How would investors use information regarding these plans?

19. Proposed Item 703, and proposed Form SR would require disclosure of whether shares were purchased in reliance on the safe harbor in Rule 10b–18. How would investors use this information? Is the use of the term ''purchased in reliance on the safe harbor'' sufficiently clear?

20. How would investors use the proposed disclosure regarding any policies and procedures relating to purchases and sales of the issuer's securities by its officers and directors during a repurchase program, including any restriction on such transactions? Should we require disclosure of broader policies and procedures related to a repurchase program, for example, how material nonpublic information is controlled for or potential impacts, if any, on executive compensation metrics? Is there additional information about repurchase plans and trading by insiders that we should require to be disclosed?

21. In this release, we are proposing amendments to require an issuer to disclose whether it repurchased its securities pursuant to a Rule 10b5–1 plan, and if so, the date that such a plan was adopted or terminated. We also are proposing amendments to Item 703 to require disclosure of any policies and procedures the issuer has established relating to purchases and sales of its securities by its officers and directors, including any restriction on such transactions. In a separate release described in note 21 above, we are proposing new Item 408 under Regulation S–K and corresponding amendments to Forms 10–Q and 10–K to require: (1) Quarterly disclosure of the use of Rule 10b5–1 and other trading arrangements by a registrant, and its directors and officers, for the trading of the issuer's securities; and (2) annual disclosure of an issuer's insider trading policies and procedures. If the Commission adopts both the proposed Item 703 and Item 408 amendments, are there opportunities to streamline or simplify overlapping disclosure requirements that may apply to an issuer's repurchase plan? If so, which provisions should we eliminate or how should we modify the proposed disclosure requirements?

22. As proposed, disclosure of issuer share repurchases would be required on a daily basis on Form SR. In addition, Item 703 would continue to require monthly summary disclosure of share repurchases that would be similar to, but not the same as, Form SR tabular disclosure. What are the costs and benefits of providing this disclosure as proposed? Do these different sets of share repurchase disclosures provide distinctly valuable information for investors and market participants? Should there instead be more alignment between Item 703 and Form SR tabular data? Alternatively, should we adopt a subset of the proposed disclosures, such as:

- Only Form SR;
- Form SR and Item 703 and Forms 20–F and N–CSR, amended as proposed, but without monthly data;
- No Form SR, but Item 703 and Forms 20–F and N–CSR, amended as proposed and including daily, weekly, or bi-weekly repurchase disclosure; or
- No Form SR, but Item 703 and Forms 20–F and N–CSR, amended as proposed, with an exhibit providing daily detail about share repurchases made during the period covered by the report?

23. We have not proposed exemptions or different requirements from the proposed revisions to Item 703, Form 20–F, and Form N–CSR for foreign private issuers, registered closed-end funds, non-accelerated filers, smaller reporting companies, or emerging growth companies. Should we exempt or provide different requirements from some or all of the proposed amendments for these or other classes of issuers?

2. Clarifying Amendments

In addition to the proposed amendments described above, we are proposing clarifying amendments to Item 703, Form 20–F, and Form N–CSR to simplify application of the rules and remove unnecessary instructions. Specifically, we are proposing:

- To relocate guidance in the *Instruction 1 to paragraph (b)(1)* about information to appear in the table and disclosure to appear in a footnote to the table to paragraph (b)(1) to a new paragraph (c);
- To consistently refer to ''issuer'' instead of ''company''; [46]
- To remove Instruction 1 and 2 in the *Instructions to paragraphs (b)(3) and (b)(4)* and effectuate those instruction by adding ''aggregate'' to total number of shares for all plans or programs publicly announced in paragraph (b)(3) in lieu of Instruction 1 and adding proposed paragraph (c) to replace Instruction 2;
- To delete the *Instruction* to the affected requirements as they are clear that all purchases, including those that do not satisfy the conditions of Rule 10b–18, are included.

Request for Comment

24. Do the changes we are proposing simplify and clarify Item 703 and the corresponding provisions in Forms 20–F and N–CSR? Are there other changes we should consider to clarify the share repurchase disclosure requirements?

C. Structured Data Requirement

We are proposing to require issuers to tag information disclosed pursuant to Item 703 of Regulation S–K, Item 16E of Form 20–F, Item 9 of Form N–CSR, and Form SR in a structured, machine-readable data language. Specifically, we are proposing to require issuers to tag the disclosures in Inline XBRL in accordance with Rule 405 of Regulation S–T and the EDGAR Filer Manual.[47] The proposed requirements would include detail tagging of quantitative amounts disclosed within the tabular disclosures in each of the aforementioned forms, as well as block text tagging and detail tagging of narrative and quantitative information disclosed in the footnotes to the tables required by Item 703 of Regulation S–K, Item 16E of Form 20–F, and Item 9 of Form N–CSR.

In 2009, the Commission adopted rules requiring operating companies to submit the information from the financial statements (including footnotes and schedules thereto) included in certain registration statements and periodic and current reports in a structured, machine-readable data language using eXtensible Business Reporting Language (''XBRL'').[48] In 2018, the Commission

[46] In Form N–CSR only we would continue to refer to ''registrants'' rather than ''issuer'' or ''company'' for consistency with other provisions in Form N–CSR.

[47] This tagging requirement would be implemented by including cross-references to Rule 405 of Regulation S–T in each of the repurchase disclosure provisions, and by revising Rule 405(b) of Regulation S–T to include the proposed repurchase disclosures. Pursuant to Rule 301 of Regulation S–T the EDGAR Filer Manual is incorporated by reference into the Commission's rules. In conjunction with the EDGAR Filer Manual, Regulation S–T governs the electronic submission of documents filed with the Commission. Rule 405 of Regulation S–T specifically governs the scope and manner of disclosure tagging requirements for operating companies and investment companies, including the requirement in Rule 405(a)(3) to use Inline XBRL as the specific structured data language to use for tagging the disclosures.

[48] *Interactive Data to Improve Financial Reporting,* Release No. 33–9002 (Jan. 30, 2009) [74 FR 6776 (Feb. 10, 2009)] (''2009 Financial Statement Information Adopting Release'')

adopted modifications to these requirements by requiring issuers to use Inline XBRL, which is both machine-readable and human-readable, to reduce the time and effort associated with preparing XBRL filings and improve the quality and usability of XBRL data for investors.[49] In 2020, the Commission adopted Inline XBRL requirements for registered closed-end funds and business development companies that will be effective no later than February 2023.[50]

Requiring Inline XBRL tagging of the repurchase disclosures would benefit investors by making the disclosures more readily available and easily accessible to investors, market participants, and others for aggregation, comparison, filtering, and other analysis, as compared to requiring a non-machine readable data language such as ASCII or HTML. This would enable automated extraction and analysis of granular data on actual repurchases, allowing investors and other market participants to more efficiently perform large-scale analysis and comparison of repurchases across issuers and time periods, including comparing repurchases to information on executive's compensation. At the same time, we do not expect the incremental compliance burden associated with tagging the additional information to be unduly burdensome, because issuers subject to the proposed tagging requirements are or in the near future will be subject to similar Inline XBRL requirements in other Commission filings.[51]

Request for Comment

25. Should we require issuers to include block text tagging of narrative disclosures, as well as detail tagging of quantitative amounts disclosed within the narrative and tabular disclosure required by Item 703 of Regulation S–K, Item 16E of Form 20–F, Item 9 of Form N–CSR, and Form SR in Inline XBRL, as proposed? Are there any changes we should make to promote accurate and consistent tagging? If so, what changes should we make?

26. Should we modify the scope of the repurchase disclosures required to be tagged? For example, should we only require tagging of the quantitative repurchase disclosures?

27. Should we require issuers to use a different structured data language to tag repurchase disclosures? If so, what structured data language should we require? Should we leave the structured data language undefined?

28. We have not proposed exemptions or different requirements from the proposed structured data requirement for foreign private issuers, registered closed-end funds, non-accelerated filers, smaller reporting companies, or emerging growth companies. Should we exempt or provide different requirements from some or all of the proposed amendments for these or other classes of issuers?

III. General Request for Comment

The Commission requests comment on the rule and form amendments proposed in this release, whether any changes to our rules or forms are necessary or appropriate to implement the objectives of our proposed rule and form amendments, and other matters that might affect the proposals contained in this release.

IV. Economic Analysis

We are mindful of the costs imposed by, and the benefits obtained from, our rules. Section 3(f) of the Exchange Act[52] and Section 2(c) of the Investment Company Act of 1940 (''Investment Company Act'')[53] require us, when engaging in rulemaking, to consider or determine whether an action is necessary or appropriate in (or, with respect to the Investment Company Act, consistent with) the public interest, and to consider, in addition to the protection of investors, whether the action will promote efficiency, competition, and capital formation. In addition, Section 23(a)(2) of the Exchange Act requires the Commission to consider the effects on competition of any rules the Commission adopts under the Exchange Act and prohibits the Commission from adopting any rule that would impose a burden on competition not necessary or appropriate in furtherance of the purposes of the Exchange Act.[54]

We have considered the economic effects of the proposed amendments, including their effects on competition, efficiency, and capital formation. Many of the effects discussed below cannot be quantified. Consequently, while we have, wherever possible, attempted to quantify the economic effects expected from this proposal, much of the discussion remains qualitative in nature. Where we are unable to quantify the economic effects of the proposed amendments, we provide a qualitative assessment of the potential effects and encourage commenters to provide data and information that would help quantify the benefits, costs, and the potential impacts of the proposed amendments on efficiency, competition, and capital formation.

As discussed in greater detail in Section II above, the Commission is proposing to require disclosure of repurchases, on a daily basis, on a new form. The proposed daily disclosure, which would be required to be structured using Inline XBRL, would include the number of shares repurchased by an issuer, the average price per share paid, the number of shares repurchased on the open market, the number of shares repurchased in reliance on the Rule 10b–18 non-exclusive safe harbor, and the number of shares repurchased pursuant to a Rule 10b5–1 plan.

The Commission is also proposing to require, on Forms 10–Q, 10–K, 20–F, and N–CSR, additional disclosure about the issuer's repurchase program and practices, including the objective or rationale for the share repurchases, the structure of an issuer's repurchase program, and whether purchases were made pursuant to a plan that is intended to satisfy the affirmative defense conditions of Rule 10b5–1(c), or in reliance on the Rule 10b–18 non-exclusive safe harbor. Further, the Commission is proposing to require disclosure of any policies and procedures relating to purchases and sales of the issuer's securities by its officers and directors during a repurchase program, including any restrictions on such transactions. The Commission is also proposing to require an issuer to indicate whether any officer or director reporting pursuant to Section 16(a) of the Exchange Act purchased or sold shares or other units of the class of the issuer's equity securities that is the subject of an issuer share repurchase plan or program within 10 business days before or after the issuer's

(requiring submission of an Interactive Data File to the Commission in exhibits to such reports); *see also* Release No. 33–9002A (Apr. 1, 2009) [74 FR 15666 (Apr. 7, 2009)].

[49] *Inline XBRL Filing of Tagged Data,* Release No. 33–10514 (June 28, 2018) [83 FR 40846, 40847 (Aug. 16, 2018)]. Inline XBRL allows filers to embed XBRL data directly into an HTML document, eliminating the need to tag a copy of the information in a separate XBRL exhibit. *Id.* at 40851.

[50] *Securities Offering Reform for Closed-End Investment Companies,* Release No. 33–10771 (Apr. 8, 2020) [85 FR 33290 (Jun. 1, 2020) at 33318].

[51] *See supra* notes 50 and 51. Inline XBRL requirements for registered closed-end funds and business development companies will take effect beginning August 1, 2022 (for seasoned issuers) and February 1, 2023 (for all other issuers). *See id.* If the proposed Inline XBRL requirements are adopted in the interim, they will not apply to registered closed-end funds and business development companies prior to the aforementioned effectiveness dates.

[52] 15 U.S.C. 78c(f).

[53] 15 U.S.C. 80a–2(c).

[54] 15 U.S.C. 78w(a)(2).

announcement of such repurchase plan or program.

We request comment on this economic analysis from all interested parties. With regard to any comments, we note that such comments are of greatest assistance to our rulemaking initiative if accompanied by supporting data and analysis of the issues addressed in those comments.

A. Baseline and Affected Parties

1. Affected Parties

Repurchase disclosures are currently required by Item 703 of Regulation S–K (on Forms 10–Q and 10–K), Item 16E of Form 20–F, and Item 9 of Form N–CSR (for registered closed-end funds). The disclosure is required with respect to any purchase made by or on behalf of the issuer or any ''affiliated purchaser'' of shares or other units of any class of the issuer's equity securities that is registered by the issuer pursuant to Section 12 of the Exchange Act. Based on staff analysis of EDGAR filings for 2020, the proposed amendments would affect the same categories of filers, including approximately 5,900 filers of Forms 10–Q and 10–K and approximately 700 filers of Form 20–F with a class of securities registered under Section 12. In addition, based on staff analysis of Morningstar Direct data for 2020, approximately 500 registered closed-end funds are expected to be affected by the proposed amendments to Form N–CSR. We lack the data to estimate the number of affected ''affiliated purchasers.''

Among the filers described above, filers that conduct repurchases today are most likely to be affected by the proposed amendments.[55] Based on data from Compustat and EDGAR filings for fiscal year 2020, we estimate that approximately 3,300 operating companies that conducted repurchases during fiscal year 2020 would be affected by the amendments (among them, approximately 250 Form 20–F filers).[56] In addition, based on staff analysis of Form N–CEN filings for 2020, approximately 100 registered closed-end funds conducted repurchases.[57] Based on these estimates, most of the affected issuers are operating companies that file periodic reports on domestic forms.

Shareholders and prospective investors would also be affected by the proposed amendments to the extent that they receive additional and more timely insight into an issuer's repurchase activity. Financial intermediaries that execute repurchases at the issuer's instruction would also be affected by the proposed amendments to the extent that they have to prepare the information necessary for an issuer's responsive disclosure, and indirectly, to the extent that the amendments affect the incidence of repurchases and thus demand for financial intermediaries' services in connection with executing repurchases. To the extent that the proposed requirement to disclose any policies and procedures relating to purchases and sales of the issuer's securities by its officers and directors during a repurchase program, including any restriction on such transactions, results in more issuers establishing such policies and procedures or imposing such restrictions, officers and directors would also be affected by the proposed amendments. We lack data to assess how many of these parties will be affected.

2. Baseline

Corporate payout decisions have been extensively studied for decades.[58] In recent years the high dollar volume of repurchase activity has renewed interest in corporate payouts in the form of share repurchases. During 2020, share repurchases accounted for approximately $670 billion.[59] Aggregate repurchases have grown significantly over the past four decades, but the increase relative to aggregate market capitalization has been significantly more modest due to the accompanying growth in aggregate market

[55] Filers with no repurchases today could be affected by the proposed amendments to the extent they were planning future repurchases and such plans were affected by the costs of the additional disclosure requirements.

[56] As a caveat, a complete estimate of the number of affected filers is limited by data coverage. A source of data commonly used in existing studies, Standard & Poor's Compustat, has limited coverage of small and unlisted registrants and Form 20–F filers. Therefore, we supplement data from Compustat with structured data from financial statement disclosures in EDGAR filings (with the caveat that variation in filer use of tags to characterize their repurchases may result in some data noise).

[57] Based upon a staff review, we expect approximately 20% of registered closed-end funds to be affected by the proposal engage in share repurchases, as compared to approximately half of operating companies.

[58] For a more detailed discussion of the data and research on repurchases and other payouts, *see* SEC Staff Response to Congress: Negative Net Equity Issuance, December 2020, *available at https://www.sec.gov/files/negative-net-equity-issuance-dec-2020.pdf* (''2020 Staff Study''); and Farre-Mensa, J., Michaely, R., & Schmalz, M. *Payout Policy,* 6 Ann. Rev. of Fin. Econ. 75 (2014) (''Farre-Mensa et al. (2014)''). Staff reports, statistics, and other staff documents (including those cited herein) represent the views of Commission staff and are not a rule, regulation, or statement of the Commission. The Commission has neither approved nor disapproved the content of these documents and, like all staff statements, they have no legal force or effect, do not alter or amend applicable law, and create no new or additional obligations for any person. The Commission has expressed no view regarding the analysis, findings, or conclusions contained therein. The focus of the 2020 Staff Study was determined by the directive of Congress in its Joint Explanatory Statement accompanying the Financial Services and General Government Appropriations Act, which directed the staff to study the recent growth of negative net equity issuances with respect to non-financial issuers, including the history and effects of those issuers repurchasing their own securities, and the effects of those repurchases on investment, corporate leverage, and economic growth. The study provided data and statistics on share repurchases across different types of companies and time periods, as well as an extensive discussion of related evidence in existing research, which offers insight into the existing market baseline. For example, the study discusses the evidence on the favorable market reaction to repurchase announcements. Among its findings, the study notes that ''[r]epurchases are an increasingly common way firms distribute cash to shareholders. There are several possible reasons firms conduct repurchases; some support efficient investment and for some the connection is less clear. The analysis below suggests that firms are more likely to conduct repurchases when they have excess cash and when they would benefit from increased reliance on debt financing.'' The study further notes that ''the data is consistent with firms using repurchases to maintain optimal levels of cash holdings and to minimize their cost of capital'' and that ''reasons for repurchases where the connection to efficient investment is less clear are unlikely to motivate the majority of repurchases since stock prices typically increase in response to repurchase announcements, suggesting that, at least on average, repurchases are viewed as having a positive effect on firm value.'' In discussing one of the criticisms of share repurchases, the study notes ''that insider sales may be timed to coincide with repurchase announcements. If insiders time sales to coincide with repurchase announcements and any resulting increase in stock price, executives may be incentivized to recommend repurchase programs to further their own gain.'' However, the study notes, it is ''difficult to ascertain the motivations underlying insider sales.'' As a caveat, existing studies referenced in this release, including the 2020 Staff Study, are necessarily constrained by existing disclosure limitations. The low frequency and the unstructured nature of existing Item 703 data on repurchase activity limit the ability of existing studies to gauge the extent of information asymmetry between issuers and investors associated with the execution of repurchase programs and its economic effects. Existing disclosure has also limited the ability of existing studies to draw a causal connection between managerial incentives and day-to-day execution of repurchase programs as well as quantify its economic effects. Further, while public attention has focused on the aggregate trends in repurchases, the attribution of aggregate trends to specific drivers of repurchases is complicated due to the presence of confounding factors that cannot be readily isolated in existing data. The discussed data limitations should be considered in evaluating existing studies of the motivations of repurchases. Additional caveats, where applicable, are referenced in the discussion of individual strands of research and evidence on repurchases below.

[59] Based on staff analysis of Standard & Poor's Compustat data related to share repurchases conducted during fiscal year 2020 by issuers listed on U.S. exchanges. This represented a significant decline from approximately $1 trillion in share repurchases during fiscal year 2019, in line with the effects of the COVID–19 crisis. The sample for this estimate is defined more broadly than in the 2020 Staff Study (adding financial and U.S.-listed foreign issuers with Compustat data), resulting in larger aggregate totals.

capitalization; in addition, aggregate repurchases, both in absolute terms and relative to aggregate market capitalization, have exhibited considerable cyclical fluctuations (increasing during economic booms and declining during recessions).[60] Dividends fluctuate less than repurchases, consistent with dividends being viewed by the market as a commitment to regularly return cash to shareholders.[61] As a result, managers may endeavor to keep dividend payments stable, mainly avoiding dividend cuts, justifying the market's interpretation.[62] Firms that exclusively pay dividends are increasingly rare whereas the proportion of firms that regularly conduct repurchases has increased over time, consistent with repurchases being a partial substitute for dividends.[63]

Information about recent repurchases is expected to be valuable to investors. Various studies argue that an issuer conducts repurchases when it believes its securities to be undervalued.[64] Corporate insiders likely have a superior understanding of their business and industry. Academic research has suggested managers can use increases in distributions, such as new repurchase programs, to signal their view that the stock is undervalued and is expected to increase in the future.[65] Several empirical studies show that on average share prices increase after actual share repurchases, suggesting that information about recent repurchases could be useful in predicting the trend of future share prices, above and beyond other market factors (while some other studies do not find this result).[66] A related explanation for repurchases is that they are an effort to provide price support by supplying liquidity when selling pressure is high; thus, share prices would be lower during an issuer's repurchases and higher afterwards.[67] In all of these scenarios, actual repurchases would precede a rise in the share price. Timely disclosure about recent actual repurchases can thus contain valuable information about the future movement of the share price that is not revealed to the market otherwise, and a lack of timely disclosure could contribute to information asymmetries between investors and issuers/insiders. The benefit of the information contained in a disclosure of recent repurchase activity would be lower to the extent that large issuer repurchases already have a price impact, resulting in price discovery and indirect revelation of information to the market, even in the absence of daily disclosure. Nevertheless, to the extent that an issuer's purchases incorporate insiders' future outlook on the firm, they could be informative to investors (complementing the information in Form 4 filings). The value of information on recent repurchases is not subsumed by the information content of announcements of repurchase programs. In the data, this is supported by the evidence of share price trends after actual repurchases.[68] Importantly, after a repurchase announcement—which is voluntary for an issuer to make—an issuer retains considerable discretion on when to implement any repurchases and how much to repurchase at any point in time. Because, similar to information on individual insider trades, such information is likely to have a short-term component, its timely disclosure is expected to be relevant for

[60] *See, e.g.,* Campello M., Graham J., & Harvey, C., *The Real Effects of Financial Constraints: Evidence from a Financial Crisis,* 97 J. Fin. Econ. 470 (2010); Dittmar, A. & Dittmar, R., *The Timing of Financing Decisions: An Examination of the Correlation in Financing Waves,* 90 J. Fin. Econ. 59 (2008) (''Dittmar and Dittmar (2008)''); Floyd, E., Li, N., & Skinner, D., *Payout Policy through the Financial Crisis: The Growth of Repurchases and the Resilience of Dividends,* 118 J. Fin. Econ 299 (2015). *See also* 2020 Staff Study (observing that growth in aggregate repurchases has fluctuated over the past several decades, as demonstrated by a large decline and rebound following the financial crisis, and also observing that share repurchases net of equity issuances as a percentage of aggregate market capitalization of public companies have remained relatively stable over the past decade, within the longer trend of modest percentage growth over the last forty years).

[61] *See, e.g.,* Brealey, R., Myers, S., & Allen, F., Principles of Corporate Finance (12th ed. 2017). Issuers generally announce dividend policies, and markets react strongly to increases and reductions in dividends. *See, e.g.,* Healy, P. & Palepu, K., *Earnings Information Conveyed by Dividend Initiations and Omissions,* 21 J. Fin. Econ. 149 (1988). Market reactions to initiations and omissions are even more pronounced. *See* Michaely, R., Thaler, R., & Womack, K., *Price Reactions to Dividend Initiations and Omissions: Overreaction or Drift*?, 50 J. Fin. 573 (1995); Lee, B.S. & Mauck, N., *Dividend Initiations, Increases and Idiosyncratic Volatility,* 40 J. Corp. Fin. 47 (2016). These studies indicate that decreases in buybacks do not elicit the same negative market reaction as dividend decreases.

[62] For example, one survey of 384 CFOs and executives suggests that the ability to avoid reducing dividends was the top consideration of managers when determining dividend policy. *See* Brav, A., Graham, J., Harvey, C., & Michaely, R., *Payout Policy in the 21st Century,* 77 J. Fin. Econ. 483 (2005) (''Brav et al. (2005)'').

[63] *See* 2020 Staff Study. The partial substitution between dividends and repurchases has also been documented in academic studies. *See, e.g.,* Skinner, D., *The Evolving Relation between Earnings, Dividends and Stock Repurchases,* 87 J. Fin. Econ. 582 (2008); Grullon, G. & Michaely, R., *Dividends, Share Repurchases, and the Substitution Hypothesis,* 57 J. Fin. 1649 (2002).

[64] *See* Farre-Mensa et al. (2014).

[65] For analysis of signaling with repurchases, *see, e.g.,* Vermaelen, T., *Common Stock Repurchases and Market Signaling: An Empirical Study,* 9(2) J. Fin. Econ. 139 (1981); Vermaelen, T., *Repurchase Tender Offers, Signaling, and Managerial Incentives,* 19 J. Fin. & Quantitative Analysis 163 (1984); Constantinides, G. & Grundy, B., *Optimal Investment with Stock Repurchase and Financing as Signals,* 2 Rev. Fin. Stud. 445 (1989); Hausch, D. & Seward, J., *Signaling with Dividends and Share Repurchases: A Choice Between Deterministic and Stochastic Cash Disbursement,* 6 Rev. Fin. Stud. 121 (1993); McNally, W., *Open Market Stock Repurchase Signaling,* 28(2) Fin. Mgmt. 55 (1999). In some studies, authors find that repurchases send a stronger signal than dividends. *See, e.g.,* Ofer, A. & Thakor, A., *A Theory of Stock Price Responses to Alternative Corporate Cash Disbursement Methods: Stock Repurchases and Dividends,* 42 J. Fin. 365 (1987); Persons, J., *Heterogeneous Shareholders and Signaling with Share Repurchases,* 3(3) J. Corp. Fin. 221–249 (1997).

[66] *See, e.g.,* Dittmar, A. & Field, L. C., *Can managers time the market? Evidence using repurchase price data,* 115(2) J. Fin. Econ. 261–282 (2015) (''Dittmar and Field (2015)''); Ben-Rephael, A., Oded, J., & Wohl, A., *Do Firms Buy Their Stock at Bargain Prices? Evidence From Actual Stock Repurchase Disclosures,* 18 Rev. Fin. 1299 (2014) (''Ben-Rephael et al. (2014)''); Chan, K., Ikenberry, D., & Lee, I., *Do Managers Time the Market? Evidence from Open-Market Share Repurchases,* 31(9) J. of Banking & Fin. 2673–2694 (2007); Cook, D., Krigman, L., & Leach, J.C., *On the Timing and Execution of Open Market Repurchases,* 17(2) Rev. of Fin. Studies, 463–498 (2004) (''Cook et al. (2004)'') (finding that larger firms in the sample perform better than smaller firms in timing the price at which repurchases are executed). However, other studies do not find evidence that repurchases are driven by market timing. *See, e.g.,* Obernberger, S., *The Timing of Actual Share Repurchases,* Working paper (2014) (concluding that contrarian trading rather than market timing ability explains the observed relation between returns and actual share repurchases); Dittmar and Dittmar (2008); Bonaimé, A., Hankins, K., & Jordan, B., *The Cost of Financial Flexibility: Evidence From Share Repurchases,* 38 J. Corp. Fin., 345–362 (2016) (finding that ''actual repurchase investments underperform hypothetical investments that mechanically smooth repurchase dollars through time by approximately two percentage points per year on average''). The differences in the conclusions may be due to differences in empirical methodology and sample period. Because these studies utilize presently available, monthly data, their conclusions may be noisy and may not map fully to the effects associated with daily repurchase activity. As a general caveat, any working papers cited here have generally not undergone peer review and may be subject to revision. Studies focused on returns following share repurchase announcements also find positive returns. *See, e.g.,* Evgeniou, T., Junqué de Fortuny, E., Nassuphis, N., & Vermaelen, T., *Volatility and the Buyback Anomaly,* 49 J. Corp. Fin., 32–53 (2018); Bargeron, L., Kulchania, M., & Thomas, S., *The Timing and Source of Long-Run Returns Following Repurchases,* 52 J. Fin. & Quantitative Analysis 491 (2017); Peyer, U., & Vermaelen, T., *The Nature And Persistence of Buyback Anomalies,* 22 Rev. Fin. Stud. 1693 (2009). *But see* Fu, F. & Huang, S., *The Persistence of Long-Run Abnormal Returns Following Stock Repurchases and Offerings,* 62 Mgmt. Science 964 (2016) (documenting disappearance of long-run, post-repurchase abnormal returns during 2003–2012).

[67] *See, e.g.,* Liu, H. & Swanson, E., *Is Price Support a Motive for Increasing Share Repurchases?,* 38 J. Corp. Fin. 77 (2016) (''Liu and Swanson (2016)'').

[68] The price effects of actual repurchases discussed above are additional to any price effects of repurchase announcements. Because repurchase announcements precede actual repurchases, the announcement effect is already incorporated into the baseline share price, against which the price effects of actual repurchases are analyzed.

investors. Existing disclosures provide a significantly delayed, aggregated insight into the execution of announced repurchases. Thus, a large part of the information content of the day-to-day timing of issuer repurchases with regard to short-term share price movements may become obsolete and potentially obscured by aggregation by the time the disclosure is made under existing requirements.[69]

Various studies address motivations behind corporate payouts and the choice of the form of payout (repurchases or dividends).[70] In a number of instances, the use of repurchases can be efficient and aligned with shareholder value maximization. Sometimes issuers that have excess cash do not have profitable investment opportunities. In such instances, distributing the cash through dividends or repurchases can alleviate concerns that managers will spend the cash in sub-optimal ways, such as empire-building acquisitions.[71] Survey evidence supports this theory, with the second most cited reason for conducting a repurchase being the ''lack of good investment opportunities.'' [72] By returning excess cash to shareholders, repurchases free up that capital to be reinvested into businesses that lack the capital to pursue value-creating investment opportunities. Stock price reactions to announcements of new repurchase programs are higher for cash-rich issuers, which may be consistent with the creation of value when managers remove their discretion over how to invest excess cash and provide that cash to investors to redeploy as they see fit.[73] Issuers may choose repurchases if the excess free cash flow stems from a one-time windfall, or if they value financial flexibility and wish to avoid a costly, long-term commitment to higher dividends.[74] For instance, firms that favor repurchases tend to have more volatile cash flows than dividend-paying firms.[75] Issuers with excess free cash flow may also choose repurchases over dividends as the method of payout because repurchases are more tax-efficient for shareholders.[76] Finally, repurchases may also be used to adjust an issuer's leverage upward, as part of adjustment towards the target capital structure, or as part of a market timing approach to capital structure.[77]

Some commentators and studies have noted that opportunistic insider behavior and agency conflicts, rather than firm value maximization, can motivate repurchases. In particular, repurchases can serve as a form of real earnings management (through decreasing the denominator of EPS) and thus be subject to short-term earnings management objectives of an executive seeking to meet or beat consensus forecasts.[78] Announcements of repurchases and actual repurchase trades can also affect short-term upward price pressure.[79] Share price- or EPS-tied compensation arrangements can thus incentivize executives to undertake repurchases, in an attempt to maximize their compensation,[80] even if such

[69] Under existing requirements, while the delay in reporting can be relatively short, for example, when a repurchase is conducted at the end of a first, second, or third fiscal quarter, by a domestic large accelerated filer, in all cases disclosure will lag actual repurchases by weeks or months and is aggregated on a monthly basis.

[70] For a more detailed summary of the related studies, *see* 2020 Staff Study and Farre-Mensa et al. (2014).

[71] *See* Jensen, M., *Agency Costs of Free Cash Flow, Corporate Finance, and Takeovers,* 76 Am. Econ. Rev. 323 (1986).

[72] *See* Brav et. al. (2005).

[73] *See* Grullon, G. & Michaely, R., *The Information Content of Share Repurchase Programs, 59* J. Fin. 651–680 (2004).

[74] *See, e.g.,* Guay, W. & Harford, J., *The Cash-Flow Permanence and Information Content of Dividend Increases versus Repurchases,* 57(3) J. Fin. Econ. 385–415 (2000); Jagannathan, M., Stephens, C., & Weisbach, M., *Financial Flexibility and the Choice between Dividends and Stock Repurchases,* 57(3) J. Fin. Econ. 355–384 (2000). *See also supra* notes 62–63 and accompanying text.

[75] *See* Hoberg, G. & Prabhala, N., *Disappearing Dividends, Catering, and Risk,* 22 Rev. Fin. Stud. 79 (2009) (showing that riskier firms are less likely to pay dividends).

[76] *See, e.g.,* Feng, L., Pukthuanthong, K., Thiengtham, D., Turtle, H. J., & Walker, T. J., *The Effects of Cash, Debt, and Insiders on Open Market Share Repurchases,* 25(1) J. App. Corp. Fin. 55–63 (2013). The tax advantage of repurchases has been attenuated but not eliminated after the 2003 dividend tax cut. Outside of tax-exempt/tax-deferred accounts, all shareholders are subject to taxes on dividends for the year the dividend was paid. In the case of repurchases, only selling shareholders are subject to taxes on capital gains (the remaining shareholders do not pay taxes until they sell their shares).

[77] *See, generally,* Baker, M. & Wurgler, J., *Market Timing and Capital Structure,* 57 J. Fin. 1 (2002). Some other evidence suggests that firms tend to repurchase stock and issue debt when the cost of debt falls relative to the cost of equity. *See* Ma, Y., *Nonfinancial Firms as Cross-Market Arbitrageurs,* 74 J. Fin. 3041 (2019). *See also* Hovakimian, A., *Role of Target Leverage in Security Issues and Repurchases,* 77(4) J. Bus. 1041–1072 (2004) (finding that ''equity issues and repurchases do not offset the accumulated deviation from the target and they are timed to market conditions'').

[78] For evidence on the use of repurchases as a method of real earnings management, *see, e.g.,* Burnett, B., Cripe, B., Martin, G., & McAllister, B., *Audit Quality and the Trade-Off Between Accretive Stock Repurchases and Accrual-Based Earnings Management,* 87 Acct. Rev. 1861 (2012). CFO survey responses indicate that increasing EPS is an important factor affecting share repurchase decisions according to Brav et. al. (2005). Investors may take this into account when evaluating EPS. For example, Hribar, P., Jenkins, N., & Johnson, W. B., *Stock Repurchases as an Earnings Management Device,* 41 J. Acct. & Econ. 3 (2006), find that the market discounts EPS announcements in situations in which EPS would have been shy of analyst expectations but for share repurchases (and where repurchases are disclosed along with quarterly earnings). Kurt (2018) studies the use of accelerated share repurchases (ASRs) for real earnings management and concludes investors ''are not fooled'' by managers' use of ASRs as an earnings management device. *See* Kurt, Ahmet C., *Managing EPS and Signaling Undervaluation as a Motivation for Repurchases: The Case of Accelerated Share Repurchases,* 17(4) Rev. Acct. & Fin. 453–481. Nevertheless, earnings management-motivated repurchases can have negative real effects on the issuer and its shareholders. For example, one recent study finds that repurchases used to push EPS above analyst expectations are accompanied by a 10% decrease in capital expenditures and a 3% decrease in research and development. *See, e.g.,* Almeida, H., Fos, V., & Kronlund, M., *The Real Effects of Share Repurchases,* 119(1) J. Fin. Econ., 168–185 (2016) (''Almeida et al. (2016)''). Note that these findings do not necessarily generalize to repurchases at issuers outside the range of EPS approaching the earnings target, or to repurchases unrelated to EPS manipulation. A 2016 McKinsey & Co. report states that share repurchases do not improve shareholder returns simply by increasing EPS because, under certain conditions, there may have been more preferable uses for those funds such as debt reduction and reinvestment in the firm. *See also, e.g.,* Ezekoye, O., Koller, T., & Mittal, A., *How Share Repurchases Boost Earnings without Improving Returns,* McKinsey, April 29, 2016, *available at https://www.mckinsey.com/business-functions/strategy-and-corporate-finance/our-insights/how-share-repurchases-boost-earnings-without-improving-returns.*

[79] With respect to actual share repurchases, a recent study shows that price support provided by actual share repurchases improves price efficiency, even when manipulation concerns might be highest, such as those that occur prior to insider sales. Busch, B. & Obernberger, S., *Actual Share Repurchases, Price Efficiency, and The Information Content Of Stock Prices,* 30 Rev. Fin. Stud. 324 (2017) (''Busch and Obernberger (2017)''). With respect to share repurchase announcements, some have suggested that managers may take advantage of positive stock price reactions to non-binding repurchase announcements and use disingenuous repurchase announcements to manipulate share prices. *See* Chan et. al. (2010) (finding in 1980–2000 data that a limited number of managers may have used repurchases in a misleading way as ''cheap talk''). Such ''cheap talk'' may result in lower announcement returns. *See, e.g.,* Alice Bonaimé, *Repurchases, Reputation, and Returns,* 47 J. Fin. & Quantitative Analysis 469 (2012) (''Bonaimé (2012)''); Bonaimé (2015). Some studies argue that ''cheap-talk'' repurchase announcements may correct mispricing by attracting additional market scrutiny. *See* Almazan, A., Banerji, S., & De Motta, A., *Attracting Attention: Cheap Managerial Talk and Costly Market Monitoring,* 63 J. Fin. 1399 (2008); Bhattacharya, U. & Jacobsen, S., *The Share Repurchase Announcement Puzzle: Theory and Evidence,* 20 Rev. Fin. 725 (2016).

[80] As an important caveat, the incentives would be weaker to the extent executive compensation plans and board committees that address executive compensation account for how repurchases would affect compensation targets and the value of incentive-based compensation. For evidence on the use of repurchases to influence compensation tied to per-share measures, *see, e.g.,* Cheng, Y., Harford, J., & Zhang, T., *Bonus-Driven Repurchases,* 50 J. Fin. & Quantitative Analysis 447 (2015) (''Cheng et al. (2015)'') (finding that ''when a CEO's bonus is directly tied to earnings per share (EPS), his company is more likely to conduct a buyback,'' with the effect being ''especially pronounced when a company's EPS is right below the threshold for a bonus award,'' that ''[s]hare repurchasing

repurchases are not optimal from the shareholder value maximization perspective. Another instance of potentially inefficient repurchase behavior, which could have a negative effect on investors, involves insider incentives to raise the share price prior to insider sales.[81] Conversely, some studies note that insider purchases of stock in conjunction with a repurchase announcement may strengthen the credibility of the repurchase signal.[82]

CFOs report considering the price of the stock when deciding whether to repurchase stock.[83] Further, academic studies have found that firms conduct repurchases when stock prices are low.[84] This trading, however, does not appear to degrade market quality, with several studies finding improved liquidity during repurchase programs.[85]

Presently, information about repurchases, aggregated at the monthly level, is provided in periodic reports (quarterly for most filers). While issuers may voluntarily announce future repurchase plans (typically on Form 8–K), they are not required to do so, nor are they required to provide timely updates to investors about incremental progress under the previously announced repurchase program. Generally, a lack of transparency, comprehensive disclosure, and timely information about repurchases may contribute to information asymmetries and thus make it harder for investors to value an issuer's securities and make informed investment decisions.

Although some issuers announce details of their repurchase programs on a voluntary basis, issuers are not required to do so, or to disclose reasons for their repurchases. Further, issuers are not required to disclose whether they allow insiders to trade during repurchases. Thus, it can be difficult for investors to determine whether the undertaken repurchases were efficient and aligned with shareholder value maximization, or were at least in part driven by self-interested behavior of corporate insiders rather than shareholder interest. The last significant change to repurchase reporting was adopted in 2003, when the Commission required domestic filers to present

increases the probability the CEO receives a bonus and the magnitude of that bonus, but only when bonus pay is EPS based,'' and further finding that ''[b]onus-driven repurchasing firms do not exhibit positive long-run abnormal returns''); Kim, S. & Ng, J., *Executive Bonus Contract Characteristics and Share Repurchases,* 93 Acct. Rev. 289 (2018) (finding that ''managers are more (less) likely to repurchase shares and spend more (less) on repurchases when as-if EPS just misses (exceeds) the bonus threshold (maximum) EPS level,'' and that ''[m]anagers making bonus-motivated repurchases do so at a higher cost''). A different study documented a link between EPS targets and repurchases but did not find evidence of a negative effects on shareholders: Young, S. & Yang, J., *Stock Repurchases and Executive Compensation Contract Design: The Role of Earnings Per Share Performance Conditions,* 86 Acct. Rev. 703–733 (2011) (finding ''a strong positive association between repurchases and EPS-contingent compensation arrangements'' but also finding ''net benefits to shareholders from this association'' (including ''larger increases in total payouts'', a more pronounced ''positive association between repurchases and cash performance'' in the presence of surplus cash; greater likelihood of undervalued firms ''signal[ing] mispricing through a repurchase,'' and ''lower abnormal accruals'') and ''no evidence that EPS-driven repurchases impose costs on share-holders in the form of investment myopia'') Further, a different study examined the real cost of EPS-motivated repurchases outside the context of compensation. *See* Almeida et al. (2016) (finding that ''[t]he probability of share repurchases that increase earnings per share (EPS) is sharply higher for firms that would have just missed the EPS forecast in the absence of the repurchase, when compared with firms that 'just beat' the EPS forecast'' and that ''EPS-motivated repurchases are associated with reductions in employment and investment, and a decrease in cash holdings'' and concluding that ''managers are willing to trade off investments and employment for stock repurchases that allow them to meet analyst EPS forecasts''). *See also* Rulemaking Petition 4–746. *But see* 2020 Staff Study (finding that, based on a review of compensation disclosures in proxy statements for a sample of 50 firms that repurchased the most stock in 2018 and 2019, ''82% of the firms reviewed either did not have EPS-linked compensation targets or had EPS targets but their board considered the impact of repurchases when determining whether performance targets were met or in setting the targets''); Fields, R., *Buybacks and the Board: Director Perspectives on the Share Repurchase Revolution,* Sept. 20, 2016, *available at https://corpgov.law.harvard.edu/2016/09/20/buybacks-and-the-board-director-perspectives-on-the-share-repurchase-revolution/* (concluding, based on interviews of ''44 directors serving on the boards of 95 publicly traded US companies with an aggregate market capitalization of $2.7 trillion'' that ''most directors said that their companies are aware of the relationship between buyback programs and compensation and that they make deliberate, informed choices to ensure that they reward executives for desired behavior rather than for financial manipulation of share prices. Anticipated buyback effects on EPS are usually factored into EPS targets, they say, and unanticipated effects can be adjusted out.'').

[81] *See, e.g.,* Chan et. al. (2010). *See also* Bonaimé, A. A. & Ryngaert, M. D., *Insider Trading and Share Repurchases: Do Insiders and Firms Trade in the Same Direction?,* 22 J. Corp. Fin. 35–53 (2013) (''Bonaimé and Ryngaert (2013)'') (finding that repurchases that coincide with net insider selling may be related to price support and/or reasons related to option exercises); Cziraki, P., Lyandres, E., & Michaely, R., *What Do Insiders Know? Evidence from Insider Trading Around Share Repurchases and SEOs,* 66 J. Corp. Fin. 101544 (2021) (''Cziraki et al. (2021)'') (finding that ''[h]igher insider net buying is associated with better post-event operating performance, a reduction in undervaluation, and, for repurchases, lower post-event cost of capital. Insider trading also predicts announcement returns and long-term abnormal returns following events.'' They conclude their results suggest ''insider trades before corporate events [repurchases and SEOs] contain information about changes both in fundamentals and in investor sentiment''); Palladino (2020) (finding increased insider selling in quarters where buybacks are occurring); Ahmed, W., *Insider Trading Around Open Market Share Repurchase Announcements,* Working paper, University of Warwick (2017) (finding that ''insiders take advantage of higher post-[repurchase] announcement price and sell more heavily'', and that such selling is predictive of lower long-term returns). *See also* Rulemaking Petition 4–746, at 5 and note 17 (expressing concern and citing evidence of repurchases used to increase share prices at the time when insiders sell shares). *See also, generally,* Edmans, A., Goncalves-Pinto, L., Groen-Xu, M., & Wang, Y., *Strategic News Releases in Equity Vesting Months,* 31(11) Rev. Fin. Stud., 4099–4141 (2018) (finding that ''CEOs release 20% more discretionary news items in months in which they are expected to sell equity, predicted using scheduled vesting months'' and that ''[t]he increase arises for positive news, but not neutral or negative news, nor nondiscretionary news'' and concluding that ''[n]ews in vesting months generates a temporary increase in stock prices and market liquidity, which the CEO exploits by cashing out shortly afterwards''; as an important caveat, while the study includes buybacks among announcements, and based on other evidence, they are generally viewed as positive announcements, the study does not provide specific results for buybacks); Edmans, A., Fang, V., & Huang, A., *The Long-Term Consequences of Short-Term Incentives,* J. Acct. Res., forthcoming (2021) (finding that ''[v]esting equity is positively associated with the probability of a firm repurchasing shares'' but that ''it is also associated with more negative long-term returns over the 2–3 years following repurchases'' and that ''CEOs sell their own stock shortly after using company money to buy the firm's stock, also inconsistent with repurchases being motivated by undervaluation''). *But see, e.g.,* Liu and Swanson (2016) (finding that ''[c]orporate insiders do not sell from personal stock holdings during the price support quarter.''); *see also* Busch and Obernberger (2017) (concluding, with respect to actual share repurchases, that price support provided by repurchases improves price efficiency, even when manipulation concerns might be highest, such as those that occur prior to insider sales). In the case of repurchase announcements, where such announcements coincide with earnings announcements, because issuers generally prohibit insiders from trading in the period leading up to earnings announcements as part of blackout periods, insider sales activity after the repurchase announcement may be the result of pent-up liquidity demand.

[82] Announcement returns are positively related to past insider purchases, especially for firms that are priced less efficiently. *See, e.g.,* Dittmar & Field (2015) (finding that ''repurchasing firms with relatively high net insider buying have significantly lower relative repurchase prices'' and concluding that firms with more net insider buying repurchase undervalued stock); Babenko, I., Tserlukevich, Y., & Vedrashko, A., *The Credibility of Open Market Share Repurchase Signaling,* J. Fin. & Quantitative Analysis 1059–1088 (2012).; Bonaimé and Ryngaert (2013) (finding that net insider buying reinforces the undervaluation signal conveyed by repurchases while net insider selling weakens it); Cziraki et al. (2021) (showing that ''pre-event insider trading contains information regarding future changes in the cost of capital for repurchasing firms''). Setting aside the signaling theory, purchases by insiders during an issuer's repurchases if such insiders are in possession of material nonpublic information may represent unlawful insider trading that may harm other market participants. Similar to insiders, issuers that purchase their securities while in possession of material nonpublic information may be subject to Rule 10b–5 liability.

[83] Brav et. al. (2005).

[84] *See, e.g.,* Dittmar and Field (2015); Ben-Rephael et al. (2014). *See also infra* note 67.

[85] *See, e.g.,* Busch and Obernberger (2017); Cook et al. (2004); Hillert, A., Maug, E., & Obernberger, S., *Stock Repurchases and Liquidity,* 119(1) J. Fin. Econ. 186–209 (2016).

monthly data on actual repurchases on a quarterly basis in Form 10–Q or 10–K (registered closed-end funds, on a semi-annual basis in Form N–CSR, and Form 20–F filers, on an annual basis in Form 20–F). One study examined the consequences of this change and found that ''[f]irms announce significantly fewer and slightly smaller open market repurchase plans in the enhanced disclosure environment,'' however, ''completion rates (the amount of stock repurchased as a percentage of the announced amount) significantly increase.'' [86] The study further states that ''[m]ore conservative announcement strategies and more aggressive completion rates are consistent with a decline in false signaling . . . open market repurchase announcements are viewed as more credible, on average, in the enhanced disclosure environment.'' [87] However, as the study notes, ''[a]s with any analysis based on a regulatory change affecting all firms simultaneously, other unobservable, macroeconomic trends could have affected repurchase behavior.'' [88]

A number of foreign jurisdictions require repurchase disclosure of greater frequency and timeliness, relative to current U.S. requirements. Studies have examined the resulting higher-frequency data on repurchase program and how repurchase trades affect investors and markets. Studies based on data from France and Hong Kong, which require repurchase disclosures at the beginning of the following month and following day, respectively, found that repurchases reduced market liquidity in periods in which repurchases took place but not in response to the disclosures.[89] These findings are consistent with potential adverse selection when a large informed trader (the repurchasing issuer) is in the market but do not suggest a negative impact from increased disclosure frequency. Other studies of disclosures required in Greece, which requires repurchase disclosures within seven days, and Hong Kong document that cumulative abnormal returns following disclosures of actual share repurchases are greatest for smaller firms as well as firms with higher book-to-market ratios. These are consistent with the studies finding that repurchase announcements may correct market undervaluation and do so especially for smaller firms, which may be subject to greater information asymmetry.[90]

While we could not find studies analyzing empirically how the introduction of more frequent disclosure affected buybacks in foreign countries, we also were not able to find evidence that such disclosure requirements adversely affected shareholder value or market participants. The broad application of a disclosure requirement to issuers in a given jurisdiction makes it hard to formulate an empirical setting, such as a quasi-natural experiment, that effectively addresses the question of how the introduction of the disclosure affected buybacks and issuers that undertake them. Moreover, there are potentially significant differences between jurisdictions with respect to other repurchase regulations, market structure, taxation, composition of the subset of issuers that undertake repurchases, and the subset of investors in such issuers, complicating cross-country comparisons or extrapolation from international studies to the U.S. setting.

In Sections IV.B and IV.C below we evaluate the anticipated costs and benefits of the final rule and the anticipated effects of the final rule on efficiency, competition, and capital formation.

B. Benefits

The proposed disclosure could benefit investors (including existing shareholders contemplating a sale or purchasing more securities) by enabling them to value the issuer's securities more accurately, resulting in better informed investment decisions.[91] Specifically, the proposed daily disclosure of repurchases (compared to the existing Form 10–Q and 10–K quarterly disclosure of monthly repurchase activity, the semi-annual disclosure on Form N–CSR, and the annual disclosure on Form 20–F) could reveal time-sensitive information about the issuer's evolving outlook on its future share price to investors in a much timelier manner.[92] To the extent issuers' repurchase decisions tend to predict future price changes,[93] information about the timing of recent repurchases could be valuable to investors' decisions to buy and sell the issuer's securities. These benefits would be more modest to the extent that many issuers already make public announcements of repurchase plans, which alleviate some information asymmetries, and there is evidence that investors on aggregate draw accurate inferences about the likely program completion rate [94] (although they cannot gauge the timing of specific repurchase trades). The benefits would further be more modest to the extent that large issuer repurchases already have price impact in the absence of a daily disclosure. The disclosure could be of greater benefit to market participants that do not have the sophistication to uncover large repurchases from other trading data. Further, the benefits of repurchase disclosure may be lower if issuers restructure their repurchases in a manner intended to minimize the information content and associated front-running costs of the daily disclosure (see Section IV.C below) in response to the proposed disclosure requirement.

In addition, the proposed periodic disclosure of the reasons for, and the structure of, the issuer's repurchase

[86] *See* Bonaimé (2015).

[87] *Id.*

[88] *Id.*

[89] *See* Ginglinger, E. & Hamon, J., *Actual Share Repurchases, Timing, and Liquidity,* 31 J. Banking & Fin. 915–938 (2007), for a study of France; and Brockman, P. & Chung, D., *Managerial Timing and Corporate Liquidity: Evidence from Actual Share Repurchases,* 61 J. Fin. Econ. 417–448 (2001), for a study of Hong Kong. While the authors do not examine empirically the effects of different reporting frequencies, they compare their findings with those from a foreign regime with a different reporting frequency and extrapolate that ''[t]he similarity of our results to the results for the Hong Kong market indicates that the choice of whether to require firms to disclose repurchases one day versus one month after execution does not affect the impact of share repurchases on liquidity''; while the study further concludes that this suggests ''that there are limited benefits from requiring greater post-trade transparency of share repurchases,'' the conclusion that greater disclosure of repurchases would have limited benefits, in our view, does not follow from the similarity of the effects of repurchases on liquidity in the two countries referenced in the study. As a further caveat, there are potentially significant comparability issues in evaluating data from different jurisdictions, which have varying legal and market conditions for repurchases.

[90] *See* Zhang, H., *Share Price Performance Following Actual Share Repurchases,* 29 J. Banking & Fin. 1887–1901 (2005), for a study of Hong Kong, and Drousia, A., Episcopos, A., & Leledakis, G., 74 Q. Rev. Econ. and Fin. 267–277 (2019), for a study of Greece. *See also* Bratli, D. & Rehman, O., *The Price Impact and Timing of Actual Share Repurchases in Norway,* Thesis (2016) (examining Norwegian data on daily repurchases and finding a small but positive price impact of such repurchases).

[91] *See supra* notes 66–68 and preceding, accompanying, and following text.

[92] Timelier disclosure of repurchases was supported by several commenters on the 2016 concept release. *See, e.g.,* letters in response to the Concept Release from Klein & Amy (supporting reporting of all repurchases on Form 8–K with no *de minimis* threshold); CalPERS (recommending reporting of significant repurchases on Form 8–K); AFR (recommending that share repurchases should be disclosed at the time that the repurchase occurs). *But see* letters in response to the Concept Release from SIFMA (arguing that more frequent reporting would not provide any material information to justify the increased cost to registrants and might prejudice a registrant's execution of share repurchases). *See also* Letters from Chamber; FedEx; Fenwick; GM; and FEI (generally supporting the existing, quarterly frequency of repurchase reporting required in Item 703).

[93] See *supra* note 67.

[94] *See supra* note 78.

program could improve the ability of investors to assess the optimality of the issuer's repurchase policy. The benefits of the information about the rationale for repurchases could be limited in cases where issuers already provide such disclosures in voluntary repurchase program announcements, or if investors are able to infer the purpose of repurchases from other public information.[95] The benefits of the information about the rationale for repurchases could be limited if such disclosure is boilerplate and provides relatively little specificity to investors.[96]

In some cases, incentives for value-destroying or opportunistic repurchases may exist, as discussed in detail in Section IV.A.2 above. To the extent that some repurchases are inefficient, the additional transparency about repurchases under the proposed amendments could reduce such opportunistic uses of buybacks. The daily disclosure of repurchases, combined with other existing disclosures (*e.g.,* dates and terms of compensation awards, dates of insider trades, dates and details of earnings announcements and earnings forecasts), could improve the ability of investors to identify those instances of repurchases that may be driven by managerial self-interest (*e.g.,* increasing the share price prior to an insider's sale, meeting a threshold in the compensation arrangement, or meeting/beating the consensus earnings forecast). Such market scrutiny could mitigate agency conflicts associated with repurchases and thereby enhance firm value, benefiting shareholders. Further, the proposed additional disclosure could make it easier for investors to timely identify repurchase announcements potentially motivated by short-term attempts to boost the share price (including cases where issuers announce repurchase programs but do not follow through), to the extent that daily information provides a more complete and timely picture than the monthly information presently reported on a quarterly (or for some filers, less frequent) basis.

The use of a structured data language (specifically, Inline XBRL) for the repurchase disclosures under the proposed amendments would enable automated extraction of granular data on issuers' repurchase programs and actual repurchases, which could allow investors, information intermediaries, and other market participants to efficiently perform large-scale analyses and comparisons of repurchases across issuers and time periods. Structured data on repurchases could also be efficiently combined with other information available in a structured data language in corporate filings (*e.g.,* information on insider sales and purchases of securities) and with market data contained in external machine-readable databases (*e.g.,* information on daily share prices and trading volume). The use of a structured data language could also enable considerably faster analysis of the disclosed data by investors and other market participants. The use of a new form for the daily disclosure of repurchase information could on the margin benefit investors manually reviewing repurchase filings of an individual issuer or a handful of issuers, relative to the reporting of such daily disclosure on an existing form (such as Form 8–K), by making the repurchase information relatively more salient and easier to find among an issuer's filings. However, in cases where investors extract structured data underlying the disclosure, the use of a new form versus adding structured data to an existing form is unlikely to have a meaningful effect.

The proposed requirements to disclose any policies and procedures relating to purchases and sales of the issuer's securities by its officers and directors during a repurchase program, including any restriction on such transactions, as well as the proposed disclosure of whether any officer or director reporting pursuant to Section 16(a) of the Exchange Act purchased or sold shares or other units of the class of the issuer's securities that is the subject of an issuer share repurchase plan or program within 10 business days before or after the issuer's announcement of an issuer purchase plan or program, could also benefit investors. This information could help investors better interpret repurchase program announcements and disclosures of actual repurchase activity in formulating projections of an issuer's future share price. As one example, a lack of restrictions on insider selling during repurchases, alongside historical disclosures of insider selling, could help investors gauge whether a future repurchase announcement, or actual repurchases, may be motivated by price support for insiders' sales of their securities, rather than conveying a true signal of undervaluation or efficiently disbursing excess cash.[97] The magnitude of these benefits may be more limited to the extent that past insider selling activity, disclosed on beneficial ownership filings, around past repurchases, could be sufficiently representative of future insider selling behavior in such circumstances, even in the absence of a disclosure of restrictions. The magnitude of these benefits of reduced information asymmetry may further be limited to the extent that the existing repurchase and disclosure practices already sufficiently provide for price efficiency.[98] Besides providing information to investors, and thus enabling better informed investment decisions, the proposed disclosure requirements might also significantly affect the underlying behavior of insiders and issuers by drawing scrutiny of investors and market participants to insider selling during repurchases, potentially disincentivizing announcements of repurchases and actual repurchases

[95] *See, e.g.,* Bonaimé (2012) (tabulating, in Table 3, evidence on the stated motive of the announced repurchase program and program completion rates). The paper finds that ''[f]ew stated motives for repurchases affect completion rates. Firms that mention undervaluation or general corporate purposes in their announcements have significantly lower completion rates, while firms that mention extending a prior plan or having a strong cash position have significantly higher completion rates on average. With the above exceptions, completion rates depend more on what issuers are doing (implied motives) than on what they are saying (stated motives).'' As a caveat, data obtained from a voluntary regime may not fully generalize to the mandatory disclosure of the rationale for repurchases under the proposed amendments.

[96] In other contexts, *see, e.g.,* Cazier, R., McMullin, J., & Treu, J., *Are Lengthy and Boilerplate Risk Factor Disclosures Inadequate? An Examination of Judicial and Regulatory Assessments of Risk Factor Language,* 96(4) Acct. Rev. 131–155 (2021) (finding that risk factor disclosures often remain ''excessively long and boilerplate'', ''lengthier and more boilerplate risk factor disclosures are less likely to be considered inadequate under judicial and regulatory review,'' and ''when risk factor language is assessed as adequate in judicial review, industry peers borrow that language more frequently, and that judicial assessments of risk factor disclosures prompt industry peers to lengthen their risk factor disclosures.''). *But see* Nelson, K. & Pritchard, A. C., *Carrot or Stick? The Shift from Voluntary to Mandatory Disclosure of Risk Factors,* 13(2) J. Empirical Legal Stud. 266–297 (2016) (finding that ''[f]irms subject to greater litigation risk disclose more risk factors, update the language more from year to year, and use more readable language than firms with lower litigation risk,'' and while ''[t]hese differences in the quality of disclosure are pronounced in the voluntary disclosure regime, [they] converge following the SEC mandate as low-risk firms improved the quality of their risk factor disclosures.''); Campbell, J., Chen, H., Dhaliwal, D., Lu, H., & Steele, L. B., *The Information Content of Mandatory Risk Factor Disclosures in Corporate Filings,* 19 Rev. Acct. Stud. 396–455 (2014) (finding that ''firms facing greater risk disclose more risk factors . . . managers provide risk factor disclosures that meaningfully reflect the risks they face . . . [and that] the information conveyed by risk factor disclosures is reflected in systematic risk, idiosyncratic risk, information asymmetry, and firm value'').

[97] *See supra* note 80.

[98] For example, one recent study shows that price support provided by actual share repurchases contributes to improved price efficiency, even when manipulation concerns might be highest, such as those that occur prior to insider sales. *See* Busch and Obernberger (2017).

motivated by price support for insider selling, to the extent such activity exists, instead of shareholder value maximization.[99] The benefits of the disclosure of whether any officer or director has purchased or sold securities of the issuer around the repurchase announcement may be small to the extent the investors can obtain the same information from existing Section 16 beneficial ownership disclosures and public announcements of repurchases.

We expect the proposed amendments to have positive effects on efficiency and capital formation. In particular, any decrease in the information asymmetry between issuers and investors about the value of an issuer's securities as a result of the disclosure could lead to more informationally efficient prices, and more efficient capital allocation in investor portfolios. Decreased information asymmetries between investors and issuers as a result of the enhanced disclosure under the proposed amendments could also incrementally facilitate capital formation and reduce the cost of capital.[100] It is difficult to determine the incremental contribution of the proposed amendments and thus the magnitude of this potential benefit.

C. Costs

The proposed disclosure would impose costs on issuers (and therefore existing shareholders). Such costs would include direct (compliance-related) costs to compile and report daily repurchase data, as well as to provide additional disclosure, such as a description of the rationale and structure of the repurchase program (including reliance on Rule 10b–18 and pursuant to a plan that is intended to satisfy the affirmative defense conditions of Rule 10b5–1(c)).[101] The aggregate direct costs of compliance would be potentially significant and would be largest for issuers that repurchase more frequently and thus have to provide more disclosures. The direct costs of compliance with the daily disclosure requirement on Form SR could be partly alleviated by the provision that such disclosure would be furnished, rather than filed, which could result in an incrementally smaller legal cost of the new disclosure.[102] It is difficult to quantify how significantly the proposed timing of the daily disclosure requirement with respect to the timing of trade settlement (*i.e.,* daily disclosure within one day of trade execution, which would be prior to the settlement of the trade, as opposed to after trade settlement) would affect direct compliance costs. As proposed, issuers would have one business day from the trade execution to report repurchases. Thus, issuers would likely have fairly complete data based on trades that have been executed, although the disclosure would be required in most cases before trades have settled (since settlement typically occurs two business days after the trade execution). Where material changes occur after settlement, issuers would incur a cost to file an amended Form SR. In addition, issuers that do not presently gather and aggregate repurchase information on a daily basis, outside of the financial reporting cycle, would incur costs to implement such systems and processes.

The proposed requirement to report the additional quantitative repurchase disclosure on a new form will impose costs. Issuers will likely incur an initial upfront cost to train counsel or retain an outside service provider to assist with the preparation of the new form. On an ongoing basis, holding the scope of the disclosure and affected filers unchanged, we expect the direct costs of filing the data on a new form to be very similar to the direct costs of filing the data on an existing form (such as Form 8–K).

The proposed requirement to use a structured data language for reporting the repurchase disclosure will impose incremental compliance costs on issuers. Such costs are expected to be modest as issuers affected by the amendments (including small and foreign filers) already are required to, or would be required to (in the case of certain closed-end funds—no later than February 2023 [103]), use Inline XBRL to comply with other disclosure obligations. Moreover, the scope of the disclosure proposed to be reported using a structured data language is limited and would thus likely require a relatively simple taxonomy of additional tags, minimizing initial and ongoing costs of complying with the proposed tagging requirement.

The proposed qualitative disclosure requirements would also result in compliance costs for issuers. While issuers are likely to have most of the additional information readily available, these disclosures would require additional time of counsel and/or management to characterize the rationale for the repurchase program, and the program's structure, in the periodic report. The proposed requirement to disclose whether any Section 16 officer or director purchased or sold securities in the 10 business day before or after a repurchase announcement would involve costs associated with collecting information from Section 16 reporting officers and directors, in reliance on their Section 16 filings and/or representations about their trading activity.

The proposed requirements would also impose indirect costs. A key indirect cost of daily disclosure (proposed to be required one business day after the repurchase trade is executed) is that it may cause the stock price to rise more than it would absent such disclosure, making additional purchases more costly. These costs would be borne by the issuer and therefore its shareholders, but would be mitigated for shareholders selling part of their position. The reason that disclosure might have this effect is it could reveal the issuer's plans to repurchase additional stock to outside investors (to the extent repurchases are taking place over multiple days), as well as the issuer's positive outlook on the stock price (to the extent that participants infer this is a motivation for the repurchase).[104] This cost to issuers

[99] Studies have found evidence that changes in mandatory disclosure affect behavior. *See, e.g.,* Chuk, E. C., *Economic Consequences of Mandated Accounting Disclosures: Evidence from Pension Accounting Standards,* 88(2) Acct. Rev. 395–427 (2013); Bonaimé (2015).

[100] *See, e.g.,* Easley, E. & O'Hara, M., *Information and the Cost of Capital,* 59(4) J. Fin. 1553–1583 (2005); Botosan, *C., Disclosure and the Cost of Capital: What Do We Know*?, 36 Acct. & Bus. Research 31–40 (2006) (stating that ''[t]he overriding conclusion of existing theoretical and empirical research is that greater disclosure reduces cost of capital''); Lambert, R., Leuz, C., & Verrecchia, R., *Accounting Information, Disclosure, and the Cost of Capital,* 45(2) J. Acct. Research 385–420 (2007) (showing, in a conceptual framework, that ''increasing the quality of mandated disclosures should in general move the cost of capital closer to the risk-free rate'' and ''generally reduce the cost of capital for each firm in the economy'' and further noting that ''the benefits of mandatory disclosures are likely to differ across firms.''); *Accelerated Filer and Large Accelerated Filer Definitions,* Rel. No. 34–88365 (Mar. 12, 2020) [85 FR 17178 (Mar. 26, 2020)], at 17215, note 477.

[101] *See* Section V for a detailed description of the estimated burden of the proposed disclosure requirements for purposes of the Paperwork Reduction Act.

[102] *See, e.g., Pay Ratio Disclosure,* Rel. No. 33–9877 (Aug. 5, 2015) [80 FR 50103 (Aug. 18, 2015)], at 50177; *Interactive Data to Improve Financial Reporting,* Rel. No. 33–9002 (Jan. 30, 2009) [74 FR 6775 (Feb. 10, 2009], at 6794; and *Selective Disclosure and Insider Trading,* Rel. No. 33–7881 (Aug. 15, 2000) [65 FR 51715 (Aug. 24, 2020)], at 51723.

[103] *See supra* note 51 and accompanying text.

[104] This cost could be more pronounced for repurchases under a Rule 10b5–1(c) plan to the extent that such repurchases exhibit a greater degree of periodicity and occur over a period of time, enabling market participants to predict future repurchases to a greater extent based on historical daily data. To the extent that more timely disclosure enables some other investors to purchase securities before the issuer completes the

would be a wealth transfer to other market participants, which would have otherwise been less informed about the issuer's outlook on its future share price. The magnitude of such costs would vary across issuers and could evolve if issuers restructure their repurchase programs in an effort to minimize the price impact associated with the proposed disclosure requirement. For example, issuers that conduct open market repurchases over multiple days on a highly predictable periodic schedule (such as under a Rule 10b5–1 or a similar trading plan, or that conduct recurring trades outside of a trading plan) may face a higher cost of this type. Conversely, issuers that conduct open market repurchases over a period of only a couple of days, or over a longer period of time but at highly irregular intervals, or in irregular amounts (*e.g.,* a series of smaller repurchases followed by a large repurchase day), may see lower costs of this type from the proposed disclosure requirement. However, issuers that bunch large repurchases into a compressed time period would likely experience greater price impact from large trades, and issuers that rely on the Rule 10b–18 safe harbor would also be limited by the safe harbor's provisions in the volume of daily repurchase activity. Further, issuers that conduct one-time repurchases outside the open market (such as in a privately negotiated transaction, as an accelerated share repurchase, or as a tender offer) may be less subject to these costs because the trade would be required to be reported after it is executed, and it would typically be executed at once. To the extent that repurchases convey information even in the absence of disclosure, if issuers were to limit repurchases due to cost, price efficiency may be reduced. To the extent that repurchases add liquidity in the absence of disclosure, limiting repurchases might also reduce liquidity.

Another potential indirect cost of the proposed disclosure is the risk of sharing sensitive information with competitors. It is unlikely that the rationale behind repurchases would reveal such proprietary information, above and beyond other disclosures about the business and financial condition of the issuer. Thus, we expect such costs to be relatively modest.

A further indirect cost of the proposed disclosure is the possibility of the proposed disclosure requirements leading issuers to deviate from an optimal payout policy (resulting in a negative effect on efficiency). For example, the described costs of the proposed disclosure might discourage some issuers from repurchases that would otherwise be optimal for shareholder value (*e.g.,* as a more flexible and tax-efficient method of payout compared to dividends). Issuers might instead overweigh dividends or reduce overall corporate payouts and inefficiently retain excess cash within the firm. Further, if the costs of the proposed disclosure requirements cause issuers to decrease overall payouts, even if issuers lack positive-net present value investment opportunities, it would limit the ability of investors to efficiently reallocate cash to other, higher-net present value investment opportunities, potentially resulting in inefficiencies in the aggregate allocation of capital across issuers.

The described direct and indirect costs of the proposed disclosure for the affected issuers would decrease shareholder value and would thus be passed on to the issuer's existing shareholders (that do not sell securities during the repurchase).

The proposed disclosure requirements could also affect financial intermediaries involved in executing repurchases on behalf of issuers. Such intermediaries are likely to incur additional costs of consolidating information about repurchase trades on a daily basis for the issuer. Such information should be relatively readily available, thus direct costs could be incremental. Financial intermediaries may also incur indirect costs of the proposed requirements. Specifically, to the extent the proposed disclosure requirements lead to a decrease in repurchases, financial intermediaries may see a decrease in orders, resulting in lower revenue.

Some of the proposed disclosure requirements may also impose costs on corporate insiders. In particular, the requirement that issuers publicly disclose whether they have policies and procedures related to purchases and sales by officers and directors during repurchases, as well as the proposed disclosure of whether any officer or director reporting pursuant to Section 16(a) of the Exchange Act purchased or sold shares or other units of the class of the issuer's equity securities that is the subject of an issuer share repurchase plan or program within 10 business days before or after the issuer's announcement of such repurchase plan or program, could cause issuers to increasingly adopt such restrictions in anticipation of the market scrutiny following such disclosure. The incremental costs of the requirement to disclose whether any officer or director reporting pursuant to Section 16(a) of the Exchange Act purchased or sold securities around the repurchase announcement may be small to the extent the investors can already obtain the same information from beneficial ownership disclosures and public announcements of repurchases. Any restrictions an issuer imposes on officer and director trading could limit the ability of corporate insiders to purchase or sell securities at issuers that conduct repurchases periodically over an extended period of times (such as open market repurchases under a multi-quarter program, or a Rule 10b5–1 plan). To the extent any new such restrictions limit insider sales, they could significantly decrease the liquidity of insiders' holdings of an issuer's securities, including securities obtained from equity-based executive compensation (which may in turn potentially lead insiders to attempt to reduce their equity exposure and negotiate more cash compensation, or negotiate larger compensation to compensate for the decreased liquidity). To the extent that the proposed requirement to disclose whether any officer or director has purchased or sold securities around the repurchase announcements leads some companies whose officers or directors trade securities within the specified period to forgo making a repurchase announcement to limit market scrutiny, the amount of information available to investors about companies' forward-looking repurchase plans could decrease.

To the extent that the proposed requirements affect small filers to a greater extent than large filers, they could result in adverse effects on competition. The fixed component of the legal costs of preparing the disclosure could be one contributing factor. The lower liquidity of smaller issuers' securities,[105] which could exacerbate the price impact of the proposed disclosure, could be another

repurchase program, thus potentially at a lower price than they would have otherwise, those other investors may benefit from being able to front-run the issuer's trades.

[105] *See, e.g.,* Amihud, Y. & Mendelson, H., *Liquidity and Stock Returns,* 42(3) Fin. Analysts J. 43–48 (1986) (noting that ''[t]he stocks of small firms suffer from market 'thinness,' which impairs their liquidity''.); Duarte, H., and Young, L., *Why is PIN priced?,* 91(2) J. Fin. Econ. 119–138 (2009) (in Table 6, showing that larger firm size is correlated with higher liquidity based on different measures); Collver, C., *A Characterization of Market Quality for Small Capitalization US Equities,* September 2014, *available at https://www.sec.gov/files/marketstructure/research/small_cap_liquidity.pdf* (2014) (finding that ''[s]mall cap stocks had larger quoted and effective spreads and traded much lower volumes than mid cap stocks'' and that ''[l]iquidity improved with market capitalization'').

factor contributing to the disproportionate effects of the disclosure on smaller filers. The latter effect could be mitigated by the lower incidence, and the lower average level (relative to issuer size), of repurchases among small issuers.[106]

D. Reasonable Alternatives

We could propose to increase the frequency of repurchase disclosure compared to existing Item 703, but implement a lower frequency compared to the proposal (*e.g.,* monthly or weekly disclosure), instead of requiring daily disclosure. Compared to the proposal, requiring less frequent reporting would provide investors with less timely information about daily issuer purchases. Compared to the baseline, such an alternative would still benefit investors by enabling them to perform more timely and in-depth retrospective evaluation of an issuer's repurchase activity, independently or in conjunction with other disclosures (*e.g.,* financial condition, risk factors, other corporate events, executive compensation, governance, and insider ownership disclosures) and gauge the extent to which recent repurchases, conducted at the specific point in time, were likely to be aligned with shareholder value maximization (as opposed to potential insider self-interest or other reasons), potentially informing future investment decisions. However, such benefits would be smaller than the benefits of the daily disclosure under the proposal, to the extent that information about actual repurchase is of a time-sensitive nature. In turn, while weekly or monthly reporting would increase issuer costs compared to the baseline, the additional cost is likely to be less significant than the cost of the daily disclosure under the proposal (particularly, with respect to the indirect costs considered in Section IV.C above).

We could also propose a different timing requirement for the reporting of daily repurchases (*e.g.,* more or fewer days after the repurchase). We are proposing that issuers report a daily summary of repurchase transactions within one business day following the trade. As two alternatives, we could require reporting within one business day after settlement (which typically occurs within two days following the trade), or allow issuers up to four business days to report on daily repurchases (consistent with the typical requirement for a Form 8–K). Generally, a longer time lag for filing the repurchase form would provide investors with less timely information about issuer purchases. In turn, it would also decrease costs for issuers described above compared to the proposal. In particular, the alternative of requiring daily reporting within one business day of the settlement could provide relatively timely information to investors, but it could also decrease costs for issuers and financial intermediaries that may lack final repurchase information until after settlement (to the extent that such costs are not already alleviated by the furnished, rather than filed, nature of the daily disclosure).

We could modify the scope of the proposed disclosure, for instance, omitting information about the use of Rule 10b–18 and/or Rule 10b5–1 in the proposed quantitative disclosure, or about any policies and procedures relating to purchases and sales of the issuer's securities by officers and directors during repurchases, including any restrictions on such transactions. Compared to the proposal, narrowing the scope of the required disclosure would reduce the costs to issuers that use these provisions to execute repurchases. However, this alternative would also provide less information to investors and result in greater information asymmetry, compared to the proposal. The effects of the alternative of omitting Rule 10b5–1 repurchase disclosures compared to the proposal could be partly mitigated if the Commission adopts additional disclosure requirements for insider and issuer Rule 10b5–1 plans under new Item 408 of Regulation S–K, which the Commission is proposing in a separate release.[107]

As another alternative, we could preserve the existing frequency of repurchase disclosure but require greater granularity of the disclosure (*e.g.,* including daily detail in Forms 10–Q, 10–K, 20–F, and N–CSR). This would allow the investors to retrospectively evaluate the optimality of repurchases at a granular level. However, compared to the proposal, less frequent reporting would provide investors with significantly less timely information about issuer purchases and thus the outlook on its future share price, resulting in less information asymmetry resolution. In turn, less frequent disclosure would also decrease the costs for issuers compared to the proposal.

We could provide exemptions from all, or some of the proposed disclosure requirements for smaller filers. As another alternative, we could provide a *de minimis* exemption to issuers whose repurchases are below a certain threshold. These alternatives could reduce the aggregate costs of the rule but also reduce the information available to investors, compared to the proposal. The economic effects of the alternative of excluding small filers are uncertain to the extent that the effects of the proposed disclosure on small filers are somewhat ambiguous. On the one hand, smaller issuers are more likely to be affected by the costs of additional disclosure, all else equal (holding constant the disclosure burden). On the other hand, smaller issuers are less likely to have repurchases,[108] which would limit the incremental burden of additional reporting under the proposed amendments for each small filer. Further, to the extent that small filers have relatively high information asymmetries because of lower analyst and institutional coverage, disclosure about their repurchases may be relatively more informative to investors.

As another alternative, we could provide exemptions or different requirements for foreign private issuers and/or registered closed-end funds. These alternatives would eliminate or reduce the costs for the affected issuers but also reduce the information benefits for investors in these issuers, compared to the proposal. For example, registered closed-end funds, in general, repurchase their shares less frequently than corporate issuers,[109] and not all of the motivations for corporate issuer share repurchases will apply to registered closed-end funds because of differences in the business model and organizational structure of a fund as compared to an operating company. Abuses can nevertheless occur when a registered closed-end fund engages in repurchases of its shares, including attempts to create an appearance that the value of the shares was steady or rising in an effort to influence the market to aid in the distribution of new shares or to manipulate the market value of securities involved in exchanges. A lack of disclosure would make it more difficult for investors to determine the extent to which the share price was being driven by such actions

[106] *See, e.g.,* Dittmar, A., *Why Do Firms Repurchase Stock,* 73(3) J. Business 331–355 (2000) (finding that ''large firms are the dominant repurchasers''); Cheng et al. (2015) (showing in Table 2 that repurchasing firms are significantly larger than nonrepurchasing firms); Jiang, Z., Kim, K. A., Lie, E., and Yang, S., *Share Repurchases, Catering, and Dividend Substitution,* 21 J. Corp. Fin., 36–50 (2013) (showing in Table 5 that firm size is positively related to the fraction of outstanding share purchase by firms on a monthly basis).

[107] *See* Rule 10b5–1 Proposing Release.

[108] *See supra* note 107 and accompanying text.

[109] *See supra* note 35.

of the fund's management.[110] Thus, we believe that investors would benefit from receiving timely details about a fund's repurchase activity so they can make an informed decision as to whether they believe the fund's share price has been influenced by this repurchase activity, which is difficult to do using the semi-annual reports on Form N–CSR. Exempting or providing different requirements for foreign private issuers may place them at a relative competitive advantage to domestic issuers. Further, it would reduce the amount of information available to investors, potentially reducing their ability to make informed investment decisions, compared to the proposal. The aggregate effects of these alternatives may be incremental as such issuers engage in relatively few repurchases as seen in Section IV.A.1 above.

We could modify some of the elements of implementation of the proposed disclosure requirements. For example, we could propose an additional requirement that a summary of daily disclosures be filed as an exhibit to the periodic report. This alternative could slightly decrease investor costs of retrieving and consolidating daily information from Form SR, compared to the proposal (because the consolidation of daily disclosures into a time series for the periodic report could require small, but not zero effort, particularly for investors that are not performing large-scale automated extraction of data on multiple issuers but are reviewing repurchase disclosure for one or a handful of issuers). This alternative also would impose incremental costs on filers, compared to the proposal (because the aggregation of such information from prior daily filings for an exhibit to a periodic report is likely to have a small, but not zero cost). As an alternative, we could require the daily disclosure to be reported on Form 8–K (and subject issuers that do not typically report on this form, such as registered closed-end funds, to this requirement) or another existing form rather than on the new form, as proposed. This alternative could incrementally lower the initial transition cost for filers, compared to the proposal. At the same time, this alternative could make it incrementally harder for investors to parse out the daily repurchase disclosure from other current events, compared to the proposed use of a dedicated form. For filers that would be subject to the daily disclosure requirement under this alternative, this alternative is unlikely to impact ongoing disclosure costs, or benefits for investors, relative to the proposal. We are retaining the existing requirement to provide monthly breakdowns of repurchase activity in periodic reports. As an alternative, we could remove this requirement, and let it be superseded by the new daily disclosures. The costs and benefits of this alternative compared to the proposal are likely to be fairly incremental because aggregation of daily disclosures into a monthly breakdown is likely to be low-cost for filers, and of relatively little incremental importance to investors. Removing this information under this alternative could on the margin increase information costs for the subset of investors that only seek monthly information about repurchases and would in that case have to newly aggregate daily information from Form SR to reproduce the monthly figures.

As another alternative, we could scale the structured disclosure requirements compared to the proposal, for instance, by not requiring that the footnote disclosure in periodic reports, or the narrative disclosure of buybacks, be structured. These alternatives could incrementally increase the cost of the extraction and analysis of additional information about the structure and purpose of repurchase programs, compared to the proposal. At the same time, the incremental cost savings for issuers, compared to the proposal, would likely be modest since affected filers already tag various other disclosures in their filings with the Commission.[111]

Request for Comment

29. Do investors currently have sufficient information about issuers' repurchases to make an informed assessment of such repurchases and their effects on the future share price? In what areas, if any, is existing disclosure lacking such that it is limiting investor ability to make informed investment decisions? Would the proposed disclosure decrease any such information gaps?

30. Is existing disclosure about repurchases sufficient to enable investors to assess whether the issuer or its insiders are engaged in self-interested or otherwise inefficient repurchases? Is such inefficient repurchase behavior common today? Would the proposed amendments sufficiently address any disclosure gaps? Would the proposed amendments decrease the likelihood of inefficient repurchase decisions?

31. How would investors benefit from the proposed new disclosure of daily repurchases? Would investors benefit from the proposed requirement to disclose additional detail about the number of shares repurchased on the open market, the number of shares repurchased in reliance on the safe harbor in Rule 10b–18, and the number of shares repurchased pursuant to a plan intended to satisfy the affirmative defense conditions of Rule 10b5–1(c)? Would investors benefit from a more streamlined disclosure, including some but not all of the proposed columns, or including only the total number of shares repurchased on a daily basis?

32. How would the proposed requirement to disclose daily repurchases affect issuers? What costs could issuers incur as a result of the proposed daily disclosures? Are issuers likely to incur front-running costs? How would the proposed timing of the new daily disclosures (one business day after the trade) affect issuers? In what ways could the proposed disclosure requirements be modified to mitigate costs to issuers?

33. Would investors benefit from alternative disclosure and reporting frequencies? For example, would the disclosure remain beneficial to investors if the daily repurchase filing were allowed to be made with a longer time lag, such as one or more business days after settlement? Alternatively, would reporting a summary of daily repurchase activity on a weekly, monthly, or quarterly basis provide valuable information to investors? Further, would reporting repurchase activity on a weekly or monthly basis still be beneficial to investors? Would the described alternatives result in a smaller increase in disclosure costs for issuers? Which alternative reporting frequency would be most beneficial in the case of foreign private issuers that presently report repurchases on an annual basis on Form 20–F and registered closed-end funds that presently report repurchases on a semi-annual basis on Form N–CSR?

34. How would investors benefit from the proposed qualitative disclosure requirements, including the rationale for, and the structure of, an issuer's repurchase program? Would investors benefit from the proposed new disclosure of any policies and procedures relating to purchases or sales

[110] *See, e.g.,* Investment Trusts and Investment Companies, pt. 3, H.R. Doc. No. 279, 76th Cong., 1st Sess. (1939) and Division of Investment Management, Protecting Investors: A Half Century of Investment Company Regulation (1992), *available at https://www.sec.gov/divisions/investment/guidance/icreg50-92.pdf.*

[111] *See* 17 CFR 232.405(b) (setting forth structured disclosure requirements for, *inter alia,* operating companies and closed-end management investment companies).

of an issuer's securities by officers and directors during the pendency of a share repurchase plan or program? How would investors benefit from the proposed new checkbox disclosure of whether any officer or director reporting pursuant to Section 16(a) of the Exchange Act has purchased or sold shares or other units of the class of the issuer's equity securities that is the subject of an issuer share repurchase plan or program within 10 business days before or after the issuer's announcement of such repurchase plan or program? What are the anticipated costs of those requirements for issuers? In what ways could those requirements be streamlined to decrease costs to issuers, while still providing valuable information to investors? Would shareholders be disadvantaged by the disclosures, as proposed, and attendant costs?

35. Would investors benefit from different qualitative disclosure requirements? If so, which ones? What would be the costs of such alternatives for issuers?

36. Would investors benefit from the proposed requirement to use a structured data language for the repurchase disclosures? What would be the costs of the proposed requirement to issuers? Should we consider alternative structured disclosure requirements for repurchase disclosure, and what would be their benefits and costs?

37. Would investors benefit from an additional requirement to compile the daily repurchase information in an exhibit to periodic reports, in addition to reporting this information on new Form SR? What would be the costs of such an alternative to issuers?

38. Would investors benefit from keeping the existing monthly disclosure in the body of the periodic report, in addition to the reporting of daily data on a new form? Would issuers realize cost savings if we eliminated the current Item 703 requirement to provide a monthly breakdown of repurchase activity?

39. What are the costs and benefits of requiring the reporting of daily data on new Form SR, as opposed to on Form 8–K or another existing form?

40. Would the proposed disclosure requirements have disproportionate effects on certain categories of issuers? How could such effects be mitigated? Should we exempt some issuers–for example, smaller reporting companies, issuers with few repurchases, registered closed-end funds, foreign private issuers–from all or some of the proposed requirements? What would be the effects of such exemptions on investors' ability to make informed investment decisions?

V. Paperwork Reduction Act

A. Summary of the Collection of Information

Certain provisions of our rules and forms that would be affected by the proposed amendments contain ''collection of information'' requirements within the meaning of the Paperwork Reduction Act of 1995 (''PRA'').[112] The Commission is submitting the proposed amendments to the Office of Management and Budget (''OMB'') for review in accordance with the PRA.[113] The hours and costs associated with preparing and filing the forms constitute reporting and cost burdens imposed by each collection of information. An agency may not conduct or sponsor, and a person is not required to comply with, a collection of information unless it displays a currently valid OMB control number. Compliance with the information collections is mandatory. Responses to the information collections are not kept confidential and there is no mandatory retention period for the information disclosed. The titles for the affected collections of information are:

- ''Form 10–K'' (OMB Control No. 3235–0063);
- ''Form 10–Q'' (OMB Control No. 3235–0070);
- ''Form 20–F'' (OMB Control No. 3235–0288);
- ''Form N–CSR'' (OMB Control No. 3235–0570); and
- ''Form SR'' (a proposed new collection of information).

We adopted the existing forms pursuant to the Exchange Act and Investment Company Act and are proposing the new form pursuant to the Exchange Act. The forms set forth the disclosure requirements for periodic reports filed by issuers to help investors make informed investment and voting decisions. A description of the proposed amendments, including the need for the information and its proposed use, as well as a description of the likely respondents, can be found in Section II above, and a discussion of the economic effects of the proposed amendments can be found in Section IV above.

B. Summary of the Estimated Burdens of the Proposed Amendments on the Collections of Information

1. Estimated Paperwork Burden for Proposed Form SR

The following table summarizes the estimated paperwork burden associated with proposed new Form SR that affected issuers of equity securities registered under Section 12 of the Exchange Act would use to disclose a repurchase of their equity shares.

PRA TABLE 1—ESTIMATED PAPERWORK BURDEN OF PROPOSED FORM

Affected form	Estimated burden	Brief explanation of estimated burden
New Form SR	A new burden of 1.5 hours for each Form SR	This burden is the estimated effect of compiling the data elements, tagging the data using Inline XBRL, and preparing and submitting the Form SR.

We estimate a burden of approximately 1.5 hours for each Form SR. The burden includes the effect of compiling the six required data elements for each date that the form is required, tagging the data using Inline XBRL, and preparing and submitting the Form SR. Our proposed 1.5 hour estimate is for the average burden over the first three years of reporting. We acknowledge that preparation of Form SR may initially entail a higher burden as issuers get accustomed to collecting data for, and preparing the new form, but we believe that the burden would be reduced with subsequent filings.

Based on data from Compustat and EDGAR filings for fiscal year 2020,[114] we estimate that approximately 3,400 issuers that conducted share repurchases during fiscal year 2020 would be affected by the proposed new Form SR requirement (among them, approximately 250 foreign private issuers who reported share repurchases on Form 20–F and 100 registered closed-end funds who reported share repurchases on Form N–CSR). We additionally note that most issuers that conduct share repurchases do so over a

[112] *See* 44 U.S.C. 3501 *et seq.*

[113] 44 U.S.C. 3507(d) and 5 CFR 1320.11.

[114] *See supra* notes 56–57 and surrounding text.

period of time, rather than by making a single purchase or a few isolated purchases during the year. We conservatively estimate that issuers conducting share repurchases would purchase shares one day a week for the entire year, resulting in 52 Form SR filings per year. Based on the staff's findings relating to the number of issuers conducting share repurchases and the estimate of the frequency of repurchases, we estimate 176,800 Form SR filings per year.

2. Estimated Paperwork Burdens of the Proposed Amendments to Periodic Reports

The following table summarizes the estimated paperwork burdens associated with the proposed amendments to the affected forms filed by issuers of equity securities registered under Section 12 of the Exchange Act.

PRA TABLE 2—ESTIMATED PAPERWORK BURDEN OF PROPOSED AMENDMENTS TO PERIODIC REPORTS

Amendments to Reg. S–K Item 703, Form 20–F and Form N–CSR, Reg. S–T Rule 405 and Proposed New Exchange Act Rule 13a–21	Estimated burden increase	Brief explanation of estimated burden increase
• Require additional disclosure regarding the structure of an issuer's repurchase program and its share repurchases;. • Require new checkbox to indicate if any of the issuer's officers or directors subject to the reporting requirements under Section 16(a) of the Exchange Act purchased or sold shares or other units of the class of the issuer's equity securities that is the subject of an issuer share repurchase plan or program within 10 business days before or after the announcement of an issuer purchase plan or program; and. • Require information to be reported using a structured data language	An increase of 3 burden hours for each of the affected forms: Form 10–K, Form 10–Q, Form 20–F and Form N–CSR.	This increase is the estimated effect on the affected forms by the proposed amendments to include additional share repurchase disclosures, clarify the rules, and require the use of structured data for this information.

Considering the various revisions outlined in Sections II.B, II.C. and II.D. above, we estimate that proposed new Rule 13a–21, Item 703 of Regulation S–K, Item 16E of Form 20–F, Item 9 of Form N–CSR, and Rule 405 of Regulation S–T (interactive data file submission requirements) would increase the paperwork burden for filings on the affected forms that include share repurchase disclosure. However, not all filings on the affected forms include these disclosures because they are provided only when an issuer conducts share repurchases that trigger the disclosure requirement. Therefore, to estimate the increase in overall paperwork burden from the proposed amendments, we first estimated the number of filings that include share repurchase information. As indicated in paragraph B.1 of this section, we estimate that approximately 3,300 operating companies (among them, approximately 250 foreign private issuers filing on Form 20–F) and approximately 100 registered closed-end funds during fiscal year 2020 would be affected by the amendments. Based on the staff's findings, the table below sets forth our estimates of the number of filings on these forms that included share repurchase disclosure. We used this data to extrapolate the effect of these changes on the paperwork burden for the listed periodic reports.[115]

PRA TABLE 3—ESTIMATED NUMBER OF AFFECTED FILINGS

Form	Current annual responses in PRA inventory	Number of filings that include share repurchase disclosure
10–K	8,292	3,050
10–Q	22,925	9,150
20–F	729	250
N–CSR	6,898	200

C. Incremental and Aggregate Burden and Cost Estimates

Below we estimate the incremental and aggregate changes in paperwork burden as a result of the proposed amendments. These estimates represent the average burden for all issuers, both large and small. In deriving our estimates, we recognize that the burdens will likely vary among individual issuers. The proposed amendments would create a new required collection of information and change the burden per response of existing collections of information, if adopted.

We calculated the burden estimates by adding the estimated additional burden to the existing estimated responses and multiplying the estimated number of responses by the estimated average amount of time it would take an issuer to prepare and review disclosure required under the proposed amendments. For purposes of the PRA, the burden is to be allocated between internal burden hours and outside professional costs. PRA Table 4 below sets forth the percentage estimates we typically use for the burden allocation for each collection of information and the estimated burden allocation for the proposed new collection of information. We also estimate that the average cost of retaining outside professionals is $400 per hour.[116]

PRA TABLE 4—ESTIMATED BURDEN ALLOCATION FOR THE AFFECTED COLLECTIONS OF INFORMATION

Collection of information	Internal (%)	Outside professionals (%)
Forms 10–K, 10–Q, N–CSR, SR	75	25
Form 20–F	25	75

PRA Table 5 below illustrates the incremental change to the total annual compliance burden of affected forms, in hours and in costs, as a result of the proposed amendments' estimated effect on the paperwork burden per response.

[115] The OMB PRA filing inventories represent a three-year average. Averages may not align with the actual number of filings in any given year.

[116] We recognize that the costs of retaining outside professionals may vary depending on the nature of the professional services, but for purposes of this PRA analysis, we estimate that such costs would be an average of $400 per hour. This estimate is based on consultations with several issuers, law firms, and other persons who regularly assist issuers in preparing and filing reports with the Commission.

PRA TABLE 5—CALCULATION OF THE INCREMENTAL CHANGE IN BURDEN ESTIMATES OF CURRENT RESPONSES RESULTING FROM THE PROPOSED AMENDMENTS

Collection of Information	Number of estimated affected responses (A) [a]	Burden hour increase per response (B)	Change in burden hours (C) = (A) × (B)	Change in company hours (D) = (C) × 0.75 or 0.25	Change in professional hours (E) = (C) × 0.25 or 0.75	Change in professional costs (F) = (E) × $400
10–K	3,050	3	9,150	6862.5	2,287.5	$915,000
10–Q	9,150	3	27,450	20,587.5	6,862.5	2,745,000
20–F	250	3	750	187.5	562.5	225,000
N–CSR	200	3	600	450	150	60,000

The following tables summarize the requested paperwork burden, including the estimated total reporting burdens and costs, under the proposed amendments.

PRA TABLE 6—REQUESTED PAPERWORK BURDEN UNDER THE PROPOSED AMENDMENTS [117]

Form	Current burden			Program change			Requested change in burden		
	Current annual responses (A)	Current burden hours (B)	Current cost burden (C)	Number of affected responses (D)	Change in company hours (E)	Change in professional costs (F)	Annual responses (G)	Burden hours (H) = (B) + (E)	Cost burden (I) = (C) + (F)
Form 10–K	8,292	14,188,040	$1,893,793,119	3,050	6,862.5	$915,000	8,292	14,194,903	$1,894,708,119
Form 10–Q	22,925	3,182,333	421,490,754	9,150	29,587.5	2,745,000	22,925	3,211,921	424,235,754
Form 20–F	729	479,261	576,824,025	250	187.5	225,000	729	479,449	577,049,025
Form N–CSR	6,898	181,167	5,199,584	200	450	60,000	6,898	181,617	5,259,584

PRA Table 7 summarizes the requested paperwork burden for the new Form SR collection of information, including the estimated total reporting burdens and costs, under the proposed amendments as described in Section II.A. For purposes of the PRA, we estimate that new Form SR will entail a 1.5 hour compliance burden per response with 176,800 annual responses.

PRA TABLE 7—REQUESTED PAPERWORK BURDEN FOR THE NEW COLLECTION OF INFORMATION

Collection of information	Requested paperwork burden		
	Annual responses (A)	Burden hours (A) × 1.5 × (0.75)	Cost burden (A) × 1.5 × (0.25) × $400
Form SR	176,800	189,900	$26,520,000

Request for Comment

Pursuant to 44 U.S.C. 3506(c)(2)(B), we request comment in order to:

- Evaluate whether the proposed collections of information are necessary for the proper performance of the functions of the Commission, including whether the information will have practical utility;
- Evaluate the accuracy of our assumptions and estimates of the frequency with which issuers conduct issuer share repurchases and of the initial and ongoing burden of the proposed collection of information;
- Determine whether there are ways to enhance the quality, utility, and clarity of the information to be collected;
- Evaluate whether there are ways to minimize the burden of the collection of information on those who respond, including through the use of automated collection techniques or other forms of information technology; and
- Evaluate whether the proposed amendments would have any effects on any other collection of information not previously identified in this section.

Any member of the public may direct to us any comments concerning the accuracy of these burden estimates and any suggestions for reducing these burdens. Persons submitting comments on the collection of information requirements should direct their comments to the Office of Management and Budget, Attention: Desk Officer for the U.S. Securities and Exchange Commission, Office of Information and Regulatory Affairs, Washington, DC 20503, and send a copy to Vanessa A. Countryman, Secretary, U.S. Securities and Exchange Commission, 100 F Street NE, Washington, DC 20549, with reference to File No. S7–21–21. Requests for materials submitted to OMB by the Commission with regard to the collection of information requirements should be in writing, refer to File No. S7–21–21 and be submitted to the U.S. Securities and Exchange Commission, Office of FOIA Services,

[117] For purposes of the PRA, the requested change in burden hours (column H) is rounded to the nearest whole number.

100 F Street NE, Washington, DC 20549. OMB is required to make a decision concerning the collection of information requirements between 30 and 60 days after publication of the proposed amendments. Consequently, a comment to OMB is best assured of having its full effect if the OMB receives it within 30 days of publication.

VI. Small Business Regulatory Enforcement Fairness Act

For purposes of the Small Business Regulatory Enforcement Fairness Act of 1996 (''SBREFA''),[118] the Commission must advise OMB as to whether the proposed amendments constitute a ''major'' rule. Under SBREFA, a rule is considered ''major'' where, if adopted, it results, or is likely to result, in:

- An annual effect on the economy of $100 million or more (either in the form of an increase or a decrease);
- A major increase in costs or prices for consumers or individual industries; or
- Significant adverse effects on competition, investment or innovation.

We request comment on whether the proposed amendments would be a ''major rule'' for purposes of SBREFA. We solicit comment and empirical data on: (a) The potential effect on the U.S. economy on an annual basis; (b) any potential increase in costs or prices for consumers or individual industries; and (c) any potential effect on competition, investment or innovation. Commenters are requested to provide empirical data and other factual support for their views to the extent possible.

VII. Initial Regulatory Flexibility Analysis

When an agency issues a rulemaking proposal, the Regulatory Flexibility Act (''RFA'')[119] requires the agency to prepare and make available for public comment an Initial Regulatory Flexibility Analysis (''IRFA'') that will describe the impact of the proposed rule on small entities.[120] This IRFA has been prepared in accordance with the Regulatory Flexibility Act. It relates to proposed amendments or additions to the rules and forms described in Section II above.

A. Reasons for, and Objectives of, the Proposed Action

The proposed amendments are intended to modernize and improve disclosure about repurchases of an issuer's equity securities that are registered under Section 12 of the Exchange Act. Specifically, the proposed amendments would require an issuer to (i) provide more timely disclosure on a new Form SR regarding purchases of its Section 12 registered equity securities for each day that it, or an affiliated purchaser, makes a share repurchase; (ii) provide additional periodic disclosures about these purchases; and (iii) tag the required information using Inline XBRL. The reasons for, and objectives of, the proposed amendments are discussed in more detail in Section II above.

B. Legal Basis

The amendments contained in this release are being proposed under the authority set forth in the Exchange Act, particularly, Sections 12, 13, 15, and 23(a) thereof; and the Investment Company Act, particularly Sections 8, 23, 24(a), 30, 31, and 38.

C. Small Entities Subject to the Proposed Rules

The proposed amendments would affect some issuers that are small entities. The RFA defines ''small entity'' to mean ''small business,'' ''small organization,'' or ''small governmental jurisdiction.''[121] For purposes of the RFA, under 17 CFR 230.157 and 17 CFR 240.0–10(a), an issuer, other than an investment company, is a ''small business'' or ''small organization'' if it had total assets of $5 million or less on the last day of its most recent fiscal year and is engaged or proposing to engage in an offering of securities not exceeding $5 million. We estimate that there are approximately 717 issuers with a class of securities registered under Section 12 of the Exchange Act that file with the Commission, other than investment companies, that may be considered small entities and are potentially subject to the proposed amendments.[122] For purposes of Commission rulemaking in connection with the RFA, an investment company (including a BDC) is a small entity if, together with other investment companies in the same group of related investment companies, it has net assets of $50 million or less as of the end of its most recent fiscal year.[123] Commission staff estimates that approximately 23 registered closed-end funds and 9 BDCs are small entities.[124]

D. Projected Reporting, Recordkeeping and Other Compliance Requirements

If adopted, the proposed amendments would require the filing of a new form along with enhanced disclosures and the use of Inline XBRL, which would increase the compliance costs for issuers conducting share repurchases. Further, the proposed amendments would expand the information provided on existing forms regarding an issuer's share repurchases. In addition, compliance with the proposed amendments may require the use of professional skills.

The proposed amendments would apply to small entities to the same extent as other entities, irrespective of size. As noted in Section IV.D. above, while we acknowledge that smaller issuers are more likely to be affected by the costs of additional disclosure, smaller issuers are also less likely to have share repurchases, which would limit the incremental burden of additional reporting under the proposed amendments.[125] In addition, while we would expect larger registered closed-end funds and BDCs (''funds''), or funds that are part of a large fund complex, to incur higher costs related to this requirement in absolute terms relative to a smaller fund or a fund that is part of a smaller fund complex, we would expect a smaller fund to find it more costly, per dollar managed, to comply with the proposed requirement because it would not be able to benefit from a larger fund complex's economies of scale. Nonetheless, we expect that the nature of any benefits and costs associated with the proposed amendments to be generally similar for large and small entities. Accordingly, we refer to the discussion of the proposed amendments' economic effects on all affected parties, including small entities, in Section IV above.[126] Consistent with that discussion, we anticipate that the economic benefits and costs likely could vary widely among small entities, primarily based

[118] 138 Public Law 104–121, Title II, 110 Stat. 857 (1996).

[119] 5 U.S.C. 601 *et seq.*

[120] 5 U.S.C. 603(a).

[121] 5 U.S.C. 601(6).

[122] This estimate is based on staff analysis of issuers, excluding co-registrants, subsidiaries, or asset-backed securities, with EDGAR filings of Form 10–K and 20–F, or amendments thereto, filed during the calendar year of January 1, 2020, to December 31, 2020 or filed by September 1, 2021 that, if timely filed by the applicable deadline, would have been filed between January 1 and December 31, 2020. Analysis is based on data from XBRL filings, Compustat, Ives Group Audit Analytics, and manual review of filings submitted to the Commission.

[123] *See* 17 CFR 270.0–10(a).

[124] This estimate is derived from an analysis of data obtained from Morningstar Direct as well as data reported to the Commission for the period ending June 2021.

[125] *See supra* Section IV.D. In addition, in Section IV.C. above we further note that to the extent that the proposed requirements affect small filers to a greater extent than large filers, they could result in adverse effects on competition.

[126] We also discuss the estimated compliance burden associated with the proposed amendments for purposes of the PRA in Section V above.

on whether those small entities conduct share repurchases and how frequently they do so.

E. Duplicative, Overlapping, or Conflicting Federal Rules

We do not believe the proposed amendments would duplicate, overlap,[127] or conflict with other existing federal rules. As proposed, Form SR would require daily disclosure of issuer share repurchases. Issuer periodic reports would also continue to provide monthly breakdowns of such repurchase activity. We additionally note that in the Rule 10b5–1 Proposing Release, we are separately proposing certain disclosure requirements for issuers regarding trading plans. In connection with the potential adoption of these rules, we would plan to coordinate the two releases to avoid any duplication, overlap or conflict between the rules.

F. Significant Alternatives

The RFA directs us to consider alternatives that would accomplish our stated objectives, while minimizing any significant adverse impact on small entities. In connection with the proposed amendments, we considered the following alternatives:

- Establishing different compliance or reporting requirements or timetables that take into account the resources available to small entities;
- Clarifying, consolidating, or simplifying compliance and reporting requirements under the rules for small entities;
- Using performance rather than design standards; and
- Exempting small entities from all or part of the requirements.[128]

The proposed amendments are intended to improve disclosure about repurchases of an issuer's equity securities for investors to evaluate those activities and decrease any information asymmetry between issuers and investors. The additional disclosure, which would be provided in a machine-readable format, should permit investors to more quickly and efficiently evaluate information relating to issuer share repurchases, on a more timely basis. While we acknowledge that small entities are more likely to be affected by the costs of additional disclosure, all else equal (holding constant the disclosure burden), small entities are less likely to have share repurchases,[129] which would limit the incremental burden of additional reporting under the proposed amendments for each small entity. Also, to the extent that small filers have relatively high information asymmetries because of lower analyst and institutional coverage, the proposed additional disclosure about their repurchases may be relatively more informative to investors. Because small entities are less likely to conduct share repurchases and in the event that they do, are more likely to have relatively high information asymmetries, we do not believe it would be appropriate to provide simplified or consolidated reporting requirements, a delayed compliance timetable, or an exemption for small entities from all or part of these requirements.

We have used design rather than performance standards in connection with the proposed rules because we are seeking specific information relating to an issuer's repurchase activity with the goal of enabling investors to better analyze share repurchase activity. Thus, the objectives of the proposed rules are unlikely to be met using a performance standard.

G. Request for Comment

We encourage the submission of comments with respect to any aspect of this IRFA. In particular, we request comments regarding:

- The number of small entities that may be affected by the proposed amendments;
- The existence or nature of the potential impact of the proposed amendments on small entities discussed in the analysis;
- How the proposed amendments could further lower the burden on small entities; and
- How to quantify the impact of the proposed amendments.

Commenters are asked to describe the nature of any impact and provide empirical data supporting the extent of the impact. Comments will be considered in the preparation of the Final Regulatory Flexibility Analysis, if the proposed amendments are adopted, and will be placed in the same public file as comments on the proposed amendments themselves.

Statutory Authority

The amendments contained in this release are being proposed under the authority set forth in Sections 12, 13, 15, and 23(a) of the Exchange Act, and Sections 8, 23, 24(a), 30, 31, and 38 of the Investment Company Act.

List of Subjects in 17 CFR Parts 229, 232, 240, 249, and 274

Reporting and record keeping requirements, Securities.

For the reasons set forth in the preamble, the Commission is proposing to amend title 17, chapter II of the Code of Federal Regulations as follows:

PART 229—STANDARD INSTRUCTIONS FOR FILING FORMS UNDER SECURITIES ACT OF 1933, SECURITIES EXCHANGE ACT OF 1934 AND ENERGY POLICY AND CONSERVATION ACT OF 1975—REGULATION S–K

■ 1. The authority citation for part 229 continues to read as follows:

Authority: 15 U.S.C. 77e, 77f, 77g, 77h, 77j, 77k, 77s, 77z–2, 77z–3, 77aa(25), 77aa(26), 77ddd, 77eee, 77ggg, 77hhh, 77iii, 77jjj, 77nnn, 77sss, 78c, 78i, 78j, 78j–3, 78*l,* 78m, 78n, 78n–1, 78o, 78u–5, 78w, 78*ll,* 78 mm, 80a–8, 80a–9, 80a–20, 80a–29, 80a–30, 80a–31(c), 80a–37, 80a–38(a), 80a–39, 80b–11 and 7201 *et seq.;* 18 U.S.C. 1350; sec. 953(b), Pub. L. 111–203, 124 Stat. 1904 (2010); and sec. 102(c), Pub. L. 112–106, 126 Stat. 310 (2012).

■ 2. Revise § 229.703 to read as follows:

§ 229.703 (Item 703) Purchases of equity securities by the issuer and affiliated purchasers.

(a) Provide the specified information in the following tabular format, and narratively with respect to any purchase made by or on behalf of the issuer or any ''affiliated purchaser,'' as defined in § 240.10b–18(a)(3) of this chapter, of shares or other units of any class of the issuer's equity securities that is registered by the issuer pursuant to section 12 of the Exchange Act (15 U.S.C. 78*l*).

[127] The proposed checkbox to indicate if any officer or director reporting pursuant to Section 16(a) of the Exchange Act purchased or sold shares or other units of the class of the issuer's equity securities that is the subject of an issuer share repurchase plan or program within 10 business days before or after the issuer's announcement of such repurchase plan or program would require issuers to make this information more easily available to investors by working in conjunction with existing Section 16(a) disclosure to inform investors in periodic reports about an officer or directors trading activity.

[128] *See supra* Section IV.D.

[129] *See supra* note 107 and accompanying text.

TABLE 1 TO PARAGRAPH (a)—ISSUER PURCHASES OF EQUITY SECURITIES

[Use the checkbox to indicate if any officer or director reporting pursuant to Section 16(a) of the Exchange Act (15 U.S.C. 78p(a)) purchased or sold shares or other units of the class of the issuer's equity securities that is the subject of an issuer share repurchase plan or program within ten (10) business days before or after the issuer's announcement of such repurchase plan or program. ☐]

Period	(a) Total number of shares (or units) purchased	(b) Average price paid per share (or unit)	(c) Total number of shares (or units) purchased as part of publicly announced plans or programs	(d) Maximum number (or approximate dollar value) of shares (or units) that may yet be purchased under the plans or programs
Month #1 (identify beginning and ending dates).				
Month #2 (identify beginning and ending dates).				
Month #3 (identify beginning and ending dates).				
Total.				

(b) The table shall include the following information for each class or series of securities for each month included in the period covered by the report:

(1) The total number of shares (or units) purchased (column (a)), including all issuer repurchases whether or not made pursuant to publicly announced plans or programs;

(2) The average price paid per share (or unit) (column (b));

(3) The aggregate total number of shares (or units) purchased as part of publicly announced repurchase plans or programs (column (c)); and

(4) The aggregate maximum number (or approximate dollar value) of shares (or units) that may yet be purchased under the plans or programs (column (d)).

(c) Disclose, by footnote to the table or narrative accompanying the table:

(1) The objective or rationale for each repurchase plan or program and the process or criteria used to determine the amount of repurchases;

(2) The number of shares purchased:

(i) Other than through a publicly announced plan or program, and if so, the nature of the transaction (*e.g.,* whether the purchases were made in open-market transactions, tender offers, in satisfaction of the issuer's obligations upon exercise of outstanding put options issued by the issuer, or other transactions);

(ii) In reliance on the safe harbor in § 240.10b–18 of this chapter; and

(iii) Pursuant to a plan that is intended to satisfy the affirmative defense conditions of § 240.10b5–1(c) of this chapter, and if so, the date(s) the plan was adopted or terminated.

(3) For publicly announced repurchase plans or programs:

(i) The date each plan or program was announced;

(ii) The dollar amount (or share or unit amount) approved;

(iii) The expiration date (if any) of each plan or program;

(iv) Each plan or program that has expired during the period covered by the table; and

(v) Each plan or program the issuer has determined to terminate prior to expiration, or under which the issuer does not intend to make further purchases.

(4) Any policies and procedures relating to purchases and sales of the issuer's securities by its officers and directors during a repurchase program, including any restrictions on such transactions.

(d) Provide the disclosure required by this section in an Interactive Data File as required by § 232.405 of this chapter (Rule 405 of Regulation S–T) in accordance with the EDGAR Filer Manual.

PART 232—REGULATION S–T—GENERAL RULES AND REGULATIONS FOR ELECTRONIC FILINGS

■ 3. The general authority citation for part 232 continues to read as follows:

Authority: 15 U.S.C. 77c, 77f, 77g, 77h, 77j, 77s(a), 77z–3, 77sss(a), 78c(b), 78*l,* 78m, 78n, 78o(d), 78w(a), 78*ll,* 80a–6(c), 80a–8, 80a–29, 80a–30, 80a–37, 7201 *et seq.;* and 18 U.S.C. 1350, unless otherwise noted.

* * * * *

■ 4. Amend § 232.405 by:

■ a. Revising the introductory text and paragraphs (a)(2) and (4);

■ b. Removing the word ''and'' at the end of paragraph (b)(1)(i);

■ c. Removing the period at the end of paragraph (b)(1)(ii) and adding ''; and'' in its place.

■ d. Adding paragraph (b)(1)(iii);

■ e. Removing the word ''and'' at the end of paragraph (b)(3)(ii);

■ f. Removing the period at the end of paragraph (b)(3)(iii) and adding ''; and'' in its place.

■ g. Adding paragraphs (b)(3)(iv) and (b)(4); and

■ h. Revising Note 1 to § 232.405.

The revisions and additions read as follows:

§ 232.405 Interactive Data File submissions.

This section applies to electronic filers that submit Interactive Data Files. Section 229.601(b)(101) of this chapter (Item 601(b)(101) of Regulation S–K), paragraph (101) of Part II—Information Not Required to be Delivered to Offerees or Purchasers of Form F–10 (§ 239.40 of this chapter), § 240.13a–21 of this chapter (Rule 13a–21 of the Exchange Act Rules), paragraph 101 of the Instructions as to Exhibits of Form 20–F (§ 249.220f of this chapter), paragraph B.(15) of the General Instructions to Form 40–F (§ 249.240f of this chapter), paragraph C.(6) of the General Instructions to Form 6–K (§ 249.306 of this chapter), General Instruction I of Form SR (§ 249.333 of this chapter), General Instruction C.3.(g) of Form N–1A (§§ 239.15A and 274.11A of this chapter), General Instruction I of Form N–2 (§§ 239.14 and 274.11a–1 of this chapter), General Instruction C.3.(h) of Form N–3 (§§ 239.17a and 274.11b of this chapter), General Instruction C.3.(h) of Form N–4 (§§ 239.17b and 274.11c of this chapter), General Instruction C.3.(h) of Form N–6 (§§ 239.17c and 274.11d of this chapter), and General Instruction C.4 of Form N–CSR (§§ 249.331 and 274.128 of this chapter) specify when electronic filers are required or permitted to submit an Interactive Data File (§ 232.11), as further described in note 1 to this section. This section imposes content, format, and submission requirements for an Interactive Data File, but does not change the substantive content requirements for the financial and other

disclosures in the Related Official Filing (§ 232.11).

(a) * * *

(2) Be submitted only by an electronic filer either required or permitted to submit an Interactive Data File as specified by § 229.601(b)(101) of this chapter (Item 601(b)(101) of Regulation S–K), paragraph (101) of Part II—Information Not Required to be Delivered to Offerees or Purchasers of Form F–10 (§ 239.40 of this chapter), Rule 13a–21 of the Exchange Act Rules (§ 240.13a–21 of this chapter), paragraph 101 of the Instructions as to Exhibits of Form 20–F (§ 249.220f of this chapter), paragraph B.(15) of the General Instructions to Form 40–F (§ 249.240f of this chapter), paragraph C.(6) of the General Instructions to Form 6–K (§ 249.306 of this chapter), General Instruction I to Form SR (§ 249.333 of this chapter), General Instruction C.3.(g) of Form N–1A (§§ 239.15A and 274.11A of this chapter), General Instruction I of Form N–2 (§§ 239.14 and 274.11a–1 of this chapter), General Instruction C.3.(h) of Form N–3 (§§ 239.17a and 274.11b of this chapter), General Instruction C.3.(h) of Form N–4 (§§ 239.17b and 274.11c of this chapter), General Instruction C.3.(h) of Form N–6 (§§ 239.17c and 274.11d of this chapter), or General Instruction C.4 of Form N–CSR (§§ 249.331 and 274.128 of this chapter), as applicable;

* * * * *

(4) Be submitted in accordance with the EDGAR Filer Manual and, as applicable, Item 601(b)(101) of Regulation S–K (§ 229.601(b)(101) of this chapter), paragraph (101) of Part II—Information Not Required to be Delivered to Offerees or Purchasers of Form F–10 (§ 239.40 of this chapter), Rule 13a–21 of the Exchange Act Rules (§ 240.13a–21 of this chapter), paragraph 101 of the Instructions as to Exhibits of Form 20–F (§ 249.220f of this chapter), paragraph B.(15) of the General Instructions to Form 40–F (§ 249.240f of this chapter), paragraph C.(6) of the General Instructions to Form 6–K (§ 249.306 of this chapter), General Instruction I to Form SR (§ 249.333 of this chapter), General Instruction C.3.(g) of Form N–1A (§§ 239.15A and 274.11A of this chapter), General Instruction I of Form N–2 (§§ 239.14 and 274.11a–1 of this chapter), General Instruction C.3.(h) of Form N–3 (§§ 239.17a and 274.11b of this chapter), General Instruction C.3.(h) of Form N–4 (§§ 239.17b and 274.11c of this chapter), General Instruction C.3.(h) of Form N–6 (§§ 239.17c and 274.11d of this chapter); or General Instruction C.4 of Form N–CSR (§§ 249.331 and 274.128 of this chapter).

(b) * * *

(1) * * *

(iii) As applicable, the disclosure set forth in paragraph (b)(4) of this section.

* * * * *

(3) * * *

(iv) As applicable, the disclosure set forth in paragraph (b)(4) of this section.

(4) An Interactive Data File must consist of the disclosure provided under 17 CFR part 229 (Regulation S–K) and related provisions that is required to be tagged, including, as applicable, the repurchase information required by:

(i) Section 229.703 of this chapter (Item 703 of Regulation S–K);

(ii) Item 16E of Form 20–F (§ 249.220f of this chapter);

(iii) Item 9 of Form N–CSR (§§ 249.331 and 274.128 of this chapter); and

(iv) General Instruction I to Form SR (§ 249.333 of this chapter).

* * * * *

Note 1 to § 232.405: Section 229.601(b)(101) of this chapter (Item 601(b)(101) of Regulation S–K) specifies the circumstances under which an Interactive Data File must be submitted and the circumstances under which it is permitted to be submitted, with respect to § 239.11 of this chapter (Form S–1), § 239.13 of this chapter (Form S–3), § 239.25 of this chapter (Form S–4), § 239.18 of this chapter (Form S–11), § 239.31 of this chapter (Form F–1), § 239.33 of this chapter (Form F–3), § 239.34 of this chapter (Form F–4), § 249.310 of this chapter (Form 10–K), § 249.308a of this chapter (Form 10–Q), and § 249.308 of this chapter (Form 8–K). Paragraph (101) of Part II—Information not Required to be Delivered to Offerees or Purchasers of § 239.40 of this chapter (Form F–10) specifies the circumstances under which an Interactive Data File must be submitted and the circumstances under which it is permitted to be submitted, with respect to Form F–10. Paragraph 101 of the Instructions as to Exhibits of § 249.220f of this chapter (Form 20–F) specifies the circumstances under which an Interactive Data File must be submitted and the circumstances under which it is permitted to be submitted, with respect to Form 20–F. Paragraph B.(15) of the General Instructions to § 249.240f of this chapter (Form 40–F) and Paragraph C.(6) of the General Instructions to § 249.306 of this chapter (Form 6–K) specify the circumstances under which an Interactive Data File must be submitted and the circumstances under which it is permitted to be submitted, with respect to § 249.240f of this chapter (Form 40–F) and § 249.306 of this chapter (Form 6–K). Section 240.13a–21 of this chapter (Rule 13a–21 of the Exchange Act Rules) and General Instruction I to § 249.333 of this chapter (Form SR) specifies the circumstances under which an Interactive Data File must be submitted, with respect to Form SR. Section 229.601(b)(101) (Item 601(b)(101) of Regulation S–K), paragraph (101) of Part II—Information not Required to be Delivered to Offerees or Purchasers of Form F–10, paragraph 101 of the Instructions as to Exhibits of Form 20–F, paragraph B.(15) of the General Instructions to Form 40–F, and paragraph C.(6) of the General Instructions to Form 6–K all prohibit submission of an Interactive Data File by an issuer that prepares its financial statements in accordance with 17 CFR 210.6–01 through 210.6–10 (Article 6 of Regulation S–X). For an issuer that is a management investment company or separate account registered under the Investment Company Act of 1940 (15 U.S.C. 80a *et seq.*) or a business development company as defined in Section 2(a)(48) of the Investment Company Act of 1940 (15 U.S.C. 80a–2(a)(48)), General Instruction C.3.(g) of Form N–1A (§§ 239.15A and 274.11A of this chapter), General Instruction I of Form N–2 (§§ 239.14 and 274.11a–1 of this chapter), General Instruction C.3.(h) of Form N–3 (§§ 239.17a and 274.11b of this chapter), General Instruction C.3.(h) of Form N–4 (§§ 239.17b and 274.11c of this chapter), General Instruction C.3.(h) of Form N–6 (§§ 239.17c and 274.11d of this chapter), and General Instruction C.4 of Form N–CSR (§§ 249.331 and 274.128 of this chapter), as applicable, specifies the circumstances under which an Interactive Data File must be submitted.

PART 240—GENERAL RULES AND REGULATIONS, SECURITIES EXCHANGE ACT OF 1934

■ 5. The general authority citation for part 240 continues to read as follows:

Authority: 15 U.S.C. 77c, 77d, 77g, 77j, 77s, 77z–2, 77z–3, 77eee, 77ggg, 77nnn, 77sss, 77ttt, 78c, 78c–3, 78c–5, 78d, 78e, 78f, 78g, 78i, 78j, 78j–1, 78k, 78k–1, 78*l,* 78m, 78n, 78n–1, 78o, 78o–4, 78o–10, 78p, 78q, 78q–1, 78s, 78u–5, 78w, 78x, 78dd, 78*ll,* 78mm, 80a–20, 80a–23, 80a–29, 80a–37, 80b–3, 80b–4, 80b–11, and 7201 *et seq.,* and 8302; 7 U.S.C. 2(c)(2)(E); 12 U.S.C. 5221(e)(3); 18 U.S.C. 1350; Pub. L. 111–203, 939A, 124 Stat. 1376 (2010); and Pub. L. 112–106, sec. 503 and 602, 126 Stat. 326 (2012), unless otherwise noted.

* * * * *

■ 6. Add § 240.13a–21 to read as follows:

§ 240.13a–21 Purchases of equity securities by the issuer and affiliated purchasers.

(a) Every issuer that has a class of equity securities registered pursuant to section 12 of the Act (15 U.S.C. 78*l*) must furnish a Form SR (§ 249.333 of this chapter) to report, as specified by the form, any purchase made by or on behalf of the issuer or any ''affiliated purchaser,'' as defined in § 240.10b–18(a)(3), of shares or other units of any class of the issuer's equity securities that is registered by the issuer pursuant to section 12 of the Act, within the time period specified in General Instruction I to Form SR. Provide the information required by the form in an Interactive Data File as required by § 232.405 of this chapter (Rule 405 of Regulation S–T) in

accordance with the EDGAR Filer Manual.

(b) This section shall not apply to an investment company registered under the Investment Company Act of 1940 (15 U.S.C. 80a–1 *et. seq.*), other than a registered closed-end investment company.

PART 249—FORMS, SECURITIES EXCHANGE ACT OF 1934

■ 7. The general authority citation for part 249 continues to read as follows:

Authority: 15 U.S.C. 78a *et seq.* and 7201 *et seq.;* 12 U.S.C. 5461 *et seq.;* 18 U.S.C. 1350; Sec. 953(b) Pub. L. 111–203, 124 Stat. 1904; Sec. 102(a)(3) Pub. L. 112–106, 126 Stat. 309 (2012), Sec. 107 Pub. L. 112–106, 126 Stat. 313 (2012), Sec. 72001 Pub. L. 114–94, 129 Stat. 1312 (2015), and secs. 2 and 3 Pub. L. 116–222, 134 Stat. 1063 (2020), unless otherwise noted.

* * * * *

■ 8. Amend Form 20–F, by revising Part II, Item 16E (referenced in § 249.220f) to read as follows:

Note: The text of Form 20–F does not, and this amendment will not, appear in the Code of Federal Regulations.

UNITED STATES

SECURITIES AND EXCHANGE COMMISSION

WASHINGTON, DC 20549

Form 20–F

* * * * *

Part II

* * * * *

Item 16E Purchases of Equity Securities by the Issuer and Affiliated Purchasers.

(a) Provide the specified information in the following tabular format, and narratively, with respect to any purchase made by or on behalf of the issuer or any ''affiliated purchaser,'' as defined in § 240.10b–18(a)(3) of this chapter, of shares or other units of any class of the issuer's equity securities that is registered by the issuer pursuant to section 12 of the Exchange Act (15 U.S.C. 78*l*).

ISSUER PURCHASES OF EQUITY SECURITIES

Use the checkbox to indicate if any officer or director reporting pursuant to Section 16(a) of the Exchange Act (15 U.S.C. 78p(a)) purchased or sold shares or other units of the class of the issuer's equity securities that is the subject of an issuer share repurchase plan or program within ten (10) business days before or after the issuer's announcement of such repurchase plan or program. □

Period	(a) Total number of shares (or units) purchased	(b Average price paid per share (or unit)	(c) Total number of shares (or units) purchased as part of publicly announced plans or programs	(d) Maximum number (or approximate dollar value) of shares (or units) that may yet be purchased under the plans or programs
Month #1 (identify beginning and ending dates).				
Month #2 (identify beginning and ending dates).				
Month #3 (identify beginning and ending dates).				
Month #4 (identify beginning and ending dates).				
Month #5 (identify beginning and ending dates).				
Month #6 (identify beginning and ending dates).				
Month #7 (identify beginning and ending dates).				
Month #8 (identify beginning and ending dates).				
Month #9 (identify beginning and ending dates).				
Month #10 (identify beginning and ending dates).				
Month #11 (identify beginning and ending dates).				
Month #12 (identify beginning and ending dates).				
Total.				

(b) The table shall include the following information for each class or series of securities for each month included in the period covered by the report:

(1) The total number of shares (or units) purchased (column (a)), including all issuer repurchases whether or not made pursuant to publicly announced plans or programs;

(2) The average price paid per share (or unit) (column (b));

(3) The aggregate total number of shares (or units) purchased as part of publicly announced repurchase plans or programs (column (c)); and

(4) The aggregate maximum number (or approximate dollar value) of shares (or units) that may yet be purchased under the plans or programs (column (d)).

(c) Disclose, by footnote to the table or narrative accompanying the table:

(1) The objective or rationale for each repurchase plan or program and the process or criteria used to determine the amount of repurchases;

(2) The number of shares purchased:

(i) Other than through a publicly announced plan or program, and if so, the nature of the transaction (*e.g.,* whether the purchases were made in open-market transactions, tender offers, in satisfaction of the company's obligations upon exercise of outstanding put options issued by the company, or other transactions);

(ii) In reliance on the safe harbor in 17 CFR 240.10b–18; and

(iii) Pursuant to a plan that is intended to satisfy the affirmative defense conditions of 17 CFR 240.10b5–

1(c), and if so, the date(s) the plan was adopted or terminated.

(3) For publicly announced repurchase plans or programs:

(i) The date each plan or program was announced;

(ii) The dollar amount (or share or unit amount) approved;

(iii) The expiration date (if any) of each plan or program;

(iv) Each plan or program that has expired during the period covered by the table; and

(v) Each plan or program the issuer has determined to terminate prior to expiration, or under which the issuer does not intend to make further purchases.

(4) Any policies and procedures relating to purchases and sales of the issuer's securities by its officers and directors during a repurchase program, including any restrictions on such transactions.

(d) Provide the disclosure required by this Item in an Interactive Data File as required by Rule 405 of Regulation S–T (17 CFR 232.405) in accordance with the EDGAR Filer Manual.

■ 9. Add § 249.333 to read as follows:

§ 249.333 Form SR.

This form shall be used for reporting of purchases by or on behalf of the issuer or an affiliated purchaser of equity securities registered by the issuer pursuant to section 12 of the Act (15 U.S.C. 781).

PART 274—FORMS PRESCRIBED UNDER THE INVESTMENT COMPANY ACT OF 1940

■ 10. The general authority citation for part 274 continues to read as follows:

Authority: 15 U.S.C. 77f, 77g, 77h, 77j, 77s, 78c(b), 78l, 78m, 78n, 78o(d), 80a–8, 80a–24, 80a–26, 80a–29, and 80a–37, unless otherwise noted.

* * * * *

■ 11. Amend Form N–CSR (referenced in §§ 249.331 and 274.128) by revising Item 9 to read as follows:

Note: The text of Form N–CSR does not, and these amendments will not, appear in the *Code of Federal Regulations.*

UNITED STATES

SECURITIES AND EXCHANGE COMMISSION

Washington, DC 20549

Form N–CSR

* * * * *

Item 9. Purchases of Equity Securities by Closed-End Management Investment Company and Affiliated Purchasers.

(a) If the registrant is a closed-end management investment company, provide the specified information in the following tabular format, and narratively with respect to any purchase made by or on behalf of the registrant or any ''affiliated purchaser,'' as defined in 17 CFR 240.10b–18(a)(3), of shares or other units of any class of the registrant's equity securities that is registered by the registrant pursuant to section 12 of the Exchange Act (15 U.S.C. 781).

REGISTRANT PURCHASES OF EQUITY SECURITIES

Use the checkbox to indicate if any officer or director reporting pursuant to Section 16(a) of the Exchange Act (15 U.S.C. 78p(a)) purchased or sold shares or other units of the class of the registrant's equity securities that is the subject of a registrant share repurchase plan or program within ten (10) business days before or after the registrant's announcement of such repurchase plan or program.

Period	(a) Total numberof shares (or units) purchased	(b) Average price paid per share (or unit)	(c) Total number of shares (or units) purchased as part of publicly announced plans or programs	(d) Maximum number (or approximate dollar value) of shares (or units) that may yet be purchased under the plans or programs
Month #1 (identify beginning and ending dates).				
Month #2 (identify beginning and ending dates).				
Month #3 (identify beginning and ending dates).				
Month #4 (identify beginning and ending dates).				
Month #5 (identify beginning and ending dates).				
Month #6 (identify beginning and ending dates).				
Total.				

(b) The table shall include the following information for each class or series of securities for each month included in the period covered by the report:

(1) The total number of shares (or units) purchased (column (a)), including all registrant repurchases whether or not made pursuant to publicly announced plans or programs;

(2) The average price paid per share (or unit) (column (b));

(3) The aggregate total number of shares (or units) purchased as part of publicly announced repurchase plans or programs (column (c)); and

(4) The aggregate maximum number (or approximate dollar value) of shares (or units) that may yet be purchased under the plans or programs (column (d)).

(c) Disclose, by footnote to the table or narrative accompanying the table:

(1) The objective or rationale for each repurchase plan or program and the process or criteria used to determine the amount of repurchases;

(2) The number of shares purchased:

(i) Other than through a publicly announced plan or program, and if so, the nature of the transaction (*e.g.,* whether the purchases were made in open-market transactions, tender offers, in satisfaction of the registrant's obligations upon exercise of outstanding put options issued by the registrant, or other transactions);

(ii) In reliance on the safe harbor in 17 CFR 240.10b–18; and

(iii) Pursuant to a plan that is intended to satisfy the affirmative defense conditions of 17 CFR 240.10b5–1(c), and if so, the date(s) the plan was adopted or terminated.

(3) For publicly announced repurchase plans or programs:

(i) The date each plan or program was announced;

(ii) The dollar amount (or share or unit amount) approved;

(iii) The expiration date (if any) of each plan or program;

(iv) Each plan or program that has expired during the period covered by the table; and

(v) Each plan or program the registrant has determined to terminate prior to expiration, or under which the registrant does not intend to make further purchases.

(4) Any policies and procedures relating to purchases and sales of the registrant's securities by its officers and directors during a repurchase program, including any restrictions on such transactions.

(d) Provide the disclosure required by this Item in an Interactive Data File as required by Rule 405 of Regulation S–T (17 CFR 232.405) in accordance with the EDGAR Filer Manual.

By the Commission.

Dated: December 15, 2021.

Vanessa A. Countryman,

Secretary.

Note: The following appendix will not appear in the Code of Federal Regulations.

UNITED STATES

SECURITIES AND EXCHANGE COMMISSION

Washington, DC 20549

FORM SR

ISSUER SHARE REPURCHASE REPORT

(Exact name of registrant as specified in its charter)

(CIK number of registrant)

(Address of Principal Executive Offices)

(IRS Employer Identification No.)

Securities registered pursuant to Section 12(b) of the Act:

Title of each class	Trading symbol(s)	Name of each exchange on which registered

Securities registered pursuant to section 12(g) of the Act:

(Title of class)

(Title of class)

GENERAL INSTRUCTIONS

I. Repurchases to be Reported and Time for Filing of Report

If purchases are made by or on behalf of the registrant or any ''affiliated purchaser,'' as defined in § 240.10b–18(a)(3) of this chapter, of shares or other units of any class of the issuer's equity securities that is registered pursuant to section 12 of the Securities Exchange Act of 1934 (15 U.S.C. 781), furnish to the Commission in accordance with the requirements of § 240.13a–21 the information set forth below in an Interactive Data File as required by Rule 405 of Regulation S–T (17 CFR 232.405) in the manner provided by the EDGAR Filer Manual before the end of the first business day following the day on which the share repurchase order has been executed. If there are material errors in, or material changes to, the information, furnish an amended Form SR.

II. Requirements for Use of Form SR

(a) The class of shares (column (a)) should clearly identify the class, even if the issuer has only one class of securities outstanding.

(b) The total number of shares purchased (column (b)) includes all shares (or units) repurchased by the issuer, regardless of whether made pursuant to publicly announced plans or programs.

(c) The average price paid per share (or unit) (column (c)) shall be reported in U.S. dollars and exclude brokerage commissions and other costs of execution.

(d) Total Number of Shares Purchased on the Open Market (column (d)) includes all shares (or units) repurchased by the issuer in open-market transactions, and does not include shares (or units) purchased in tender offers, in satisfaction of the issuer's obligations upon exercise of outstanding put options issued by the issuer, or other transactions.

(e) Total Number of Shares Purchased in Reliance on the Safe Harbor in 17 CFR 240.10b–18 (column (e)) includes all shares (or units) repurchased in reliance on 17 CFR 240.10b–18.

(f) Total Number of Shares Purchased Pursuant to a Plan that is Intended to Satisfy the Affirmative Defense Conditions of 17 CFR 240.10b5–1(c) (column (f)) includes all shares (or units) repurchased where the issuer intended to satisfy the affirmative defense conditions of 17 CFR 240.10b5–1(c).

III. Preparation of Report

This form is not to be used as a blank form to be filled in, but only as a guide in the preparation of the report meeting the requirements of 17 CFR 240.13a–21. The report shall contain all columns of the table, and any columns for which there is no relevant information may be appropriately marked or left blank. The table may contain additional columns as necessary to provide disclosure responsive to the requirements of 17 CFR 240.13a–21 provided the answers thereto are prepared in the manner specified in Rule 12b–13 (17 CFR 240.12b–13). These General Instructions are not to be filed with the report.

IV. Submission of the Form

This form must be submitted in electronic format via our Electronic Data Gathering Analysis and Retrieval System (EDGAR) in accordance with EDGAR rules set forth in Regulation S–T (17 CFR part 232). You must provide the signatures required for the Form in accordance with 17 CFR 232.302.

ISSUER PURCHASES OF EQUITY SECURITIES

Date	(a) Class of shares	(b) Total number of shares purchased	(c) Average price paid per share	(d) Total number of shares purchased on the open market	(e) Total number of shares purchased in reliance on the safe harbor in 17 CFR 240.10b–18	(f) Total number of shares purchased pursuant to a plan that is intended to satisfy the affirmative defense conditions of 17 CFR 240.10b5–1(c)

SIGNATURES

Pursuant to the requirements of the Act, the registrant has duly caused this report to be signed on its behalf by the undersigned hereunto duly authorized.

(Registrant)

Date:

(Signature) *

* Print name and title of the signing officer under their signature.

[FR Doc. 2022–01068 Filed 2–14–22; 8:45 am]

BILLING CODE 8011–01–P

DEPARTMENT OF HOMELAND SECURITY

Coast Guard

33 CFR Part 165

[Docket Number USCG–2022–0040]

RIN 1625–AA87

Security Zone, Delaware River, Philadelphia, PA

AGENCY: Coast Guard, Department of Homeland Security, (DHS).

ACTION: Notice of proposed rulemaking.

SUMMARY: The Coast Guard is proposing to establish a security zone for certain waters of the Delaware River. This action is necessary to provide protection of Very Important Persons (VIPs) while attending the Democratic National Caucus (DNC) on the Delaware River in the vicinity of Penns Landing located in Philadelphia, PA. This security zone will be enforced intermittently and only for the protection of VIPs when in the area and will restrict vessel traffic while the zones are being enforced. This proposed rulemaking would prohibit persons and vessels from being in the security zone unless authorized by the Captain of the Port Delaware Bay or a designated representative. We invite your comments on this proposed rulemaking.

DATES: Comments and related material must be received by the Coast Guard on or before February 23, 2022.

ADDRESSES: You may submit comments identified by docket number USCG–2022–0040 using the Federal Decision Making Portal at *https://www.regulations.gov.* See the ''Public Participation and Request for Comments'' portion of the **SUPPLEMENTARY INFORMATION** section for further instructions on submitting comments.

FOR FURTHER INFORMATION CONTACT: If you have questions on this rule, call or email Petty Officer Jennifer Padilla, Sector Delaware Bay, Waterways Management Division, U.S. Coast Guard; telephone 215–271–4889, email *Jennifer.L.Padilla@uscg.mil.*

SUPPLEMENTARY INFORMATION:

I. Table of Abbreviations

CFR Code of Federal Regulations
DHS Department of Homeland Security
FR Federal Register
NPRM Notice of proposed rulemaking
§ Section
U.S.C. United States Code

II. Background, Purpose, and Legal Basis

On January 12, 2022, the United States Capitol Police notified the Coast Guard that the Democratic National Caucus (DNC) is being held in the vicinity of Penns Landing located in Philadelphia, PA from 11 a.m. on March 9, 2022 through 11:59 p.m. on March 11, 2022. The DNC is being held adjacent to the Delaware River and this security zone is needed to provide protection and security of the VIPs attending the Democratic National Caucus in the vicinity of this waterway. The presence of these persons creates unique safety and security concerns. The Captain of the Port Delaware Bay (COTP) has determined that attendance of VIPs at the Democratic National Caucus March 9, 2022, through March 11, 2022, presents a potential target for terrorist acts, sabatoge, or other subversive acts, accidents, or other causes of a similar nature.

The purpose of this rulemaking is to protect these persons, the public, and the surrounding waterway, because the Democratic National Caucus is being held at Penns landing which is a highly populated area, adjacent to the Delaware River. The Coast Guard is proposing this rulemaking under authority in 46 U.S.C. 70034 (previously 33 U.S.C. 1231).

III. Discussion of Proposed Rule

The COTP is proposing to establish a security zone from March 9, 2022, through March 11, 2022, on certain waters of the Delaware River in Philadelphia, PA. Specifically, the security zone would cover all waters within the Delaware River contiguous to the Pennsylvania shoreline and extending out into the Delaware River approximately 250 yards, within an area bounded by a line connecting the following points: Beginning at the Pennsylvania shoreline at latitude 39°56.87′ N, longitude 075°8.36′ W, thence east to latitude 39°56.85′ N, longitude 075°8.20′ W, thence south to latitude 39°56.45′ N, longitude 075°8.25′ W, thence west to the Pennsylvania shoreline at latitude 39°56.47′ N, longitude 075°8.41′ W, thence north following the shoreline to the originating point.

This zone will be enforced intermittently during the effective dates. Enforcement of this zone will be broadcast via Broadcast Notice to Mariners on VHF–FM marine channel 16 as well as actual notice via on scene Coast Guard Personnel.

No vessel or person will be permitted to enter or transit these security zones without obtaining permission from the COTP or a designated representative and must proceed as directed by on scene enforcement vessels. Any vessel permitted to transit the zone will be required to continue through the zone without pause or delay as directed by on scene enforcement vessels.

The regulatory text we are proposing appears at the end of this document.

IV. Regulatory Analyses

We developed this proposed rule after considering numerous statutes and Executive orders related to rulemaking. Below we summarize our analyses based on a number of these statutes and

Executive orders, and we discuss First Amendment rights of protestors.

A. Regulatory Planning and Review

Executive Orders 12866 and 13563 direct agencies to assess the costs and benefits of available regulatory alternatives and, if regulation is necessary, to select regulatory approaches that maximize net benefits. This NPRM has not been designated a ''significant regulatory action,'' under Executive Order 12866. Accordingly, the NPRM has not been reviewed by the Office of Management and Budget (OMB).

This regulatory action determination is based on the duration, size, location and time of year of the zone. During this time of year, this Security Zone is primarily used by Commercial Traffic. That traffic will be permitted to transit through the zone without pause or delay upon receiving approval of on-scene enforcement vessels. This zone will only be enforced for limited durations when deemed necessary by the COTP to augment the protection of the VIPs attending the Democratic Natioanl Caucus.

B. Impact on Small Entities

The Regulatory Flexibility Act of 1980, 5 U.S.C. 601–612, as amended, requires Federal agencies to consider the potential impact of regulations on small entities during rulemaking. The term ''small entities'' comprises small businesses, not-for-profit organizations that are independently owned and operated and are not dominant in their fields, and governmental jurisdictions with populations of less than 50,000. The Coast Guard certifies under 5 U.S.C. 605(b) that this proposed rule would not have a significant economic impact on a substantial number of small entities.

While some owners or operators of vessels intending to transit the safety zone may be small entities, for the reasons stated in section IV.A above, this proposed rule would not have a significant economic impact on any vessel owner or operator.

If you think that your business, organization, or governmental jurisdiction qualifies as a small entity and that this proposed rule would have a significant economic impact on it, please submit a comment (see **ADDRESSES**) explaining why you think it qualifies and how and to what degree this rule would economically affect it.

Under section 213(a) of the Small Business Regulatory Enforcement Fairness Act of 1996 (Pub. L. 104–121), we want to assist small entities in understanding this proposed rule. If the proposed rule would affect your small business, organization, or governmental jurisdiction and you have questions concerning its provisions or options for compliance, please call or email the person listed in the **FOR FURTHER INFORMATION CONTACT** section. The Coast Guard will not retaliate against small entities that question or complain about this proposed rule or any policy or action of the Coast Guard.

C. Collection of Information

This proposed rule would not call for a new collection of information under the Paperwork Reduction Act of 1995 (44 U.S.C. 3501–3520).

D. Federalism and Indian Tribal Governments

A rule has implications for federalism under Executive Order 13132 (Federalism), if it has a substantial direct effect on the States, on the relationship between the National Government and the States, or on the distribution of power and responsibilities among the various levels of government. We have analyzed this proposed rule under that order and have determined that it is consistent with the fundamental federalism principles and preemption requirements described in Executive Order 13132.

Also, this proposed rule does not have tribal implications under Executive Order 13175 (Consultation and Coordination with Indian Tribal Governments) because it would not have a substantial direct effect on one or more Indian tribes, on the relationship between the Federal Government and Indian tribes, or on the distribution of power and responsibilities between the Federal Government and Indian tribes. If you believe this proposed rule has implications for federalism or Indian tribes, please call or email the person listed in the **FOR FURTHER INFORMATION CONTACT** section.

E. Unfunded Mandates Reform Act

The Unfunded Mandates Reform Act of 1995 (2 U.S.C. 1531–1538) requires Federal agencies to assess the effects of their discretionary regulatory actions. In particular, the Act addresses actions that may result in the expenditure by a State, local, or tribal government, in the aggregate, or by the private sector of $100,000,000 (adjusted for inflation) or more in any one year. Though this proposed rule would not result in such an expenditure, we do discuss the potential effects of this proposed rule elsewhere in this preamble.

F. Environment

We have analyzed this proposed rule under Department of Homeland Security Directive 023–01, Rev. 1, associated implementing instructions, and Environmental Planning COMDTINST 5090.1 (series), which guide the Coast Guard in complying with the National Environmental Policy Act of 1969 (42 U.S.C. 4321–4370f), and have made a preliminary determination that this action is one of a category of actions that do not individually or cumulatively have a significant effect on the human environment. This proposed rule involves a security zone which will be intermittently enforced over the course of 3 days. Normally such actions are categorically excluded from further review under paragraph L60(a) of Appendix A, Table 1 of DHS Instruction Manual 023–01–001–01, Rev. 1. A preliminary Record of Environmental Consideration supporting this determination is available in the docket. For instructions on locating the docket, see the **ADDRESSES** section of this preamble. We seek any comments or information that may lead to the discovery of a significant environmental impact from this proposed rule.

G. Protest Activities

The Coast Guard respects the First Amendment rights of protesters. Protesters are asked to call or email the person listed in the **FOR FURTHER INFORMATION CONTACT** section to coordinate protest activities so that your message can be received without jeopardizing the safety or security of people, places, or vessels.

V. Public Participation and Request for Comments

We view public participation as essential to effective rulemaking, and will consider all comments and material received during the comment period. Your comment can help shape the outcome of this rulemaking. If you submit a comment, please include the docket number for this rulemaking, indicate the specific section of this document to which each comment applies, and provide a reason for each suggestion or recommendation.

Submitting comments. We encourage you to submit comments through the Federal Decision Making Portal at *https://www.regulations.gov.* To do so, go to *https://www.regulations.gov,* type USCG–2022–0040 in the search box and click ''Search.'' Next, look for this document in the Search Results column, and click on it. Then click on the Comment option. If you cannot submit your material by using *https://www.regulations.gov,* call or email the person in the **FOR FURTHER INFORMATION CONTACT** section of this proposed rule for alternate instructions.

Viewing material in docket. To view documents mentioned in this proposed rule as being available in the docket, find the docket as described in the previous paragraph, and then select ''Supporting & Related Material'' in the Document Type column. Public comments will also be placed in our online docket and can be viewed by following instructions on the *https://www.regulations.gov* Frequently Asked Questions web page. We review all comments received, but we will only post comments that address the topic of the proposed rule. We may choose not to post off-topic, inappropriate, or duplicate comments that we receive.

Personal information. We accept anonymous comments. Comments we post to *https://www.regulations.gov* will include any personal information you have provided. For more about privacy and submissions to the docket in response to this document, see DHS's eRulemaking System of Records notice (85 FR 14226, March 11, 2020).

List of Subjects in 33 CFR Part 165

Harbors, Marine safety, Navigation (water), Reporting and recordkeeping requirements, Security measures, Waterways.

For the reasons discussed in the preamble, the Coast Guard is proposing to amend 33 CFR part 165 as follows:

PART 165—REGULATED NAVIGATION AREAS AND LIMITED ACCESS AREAS

■ 1. The authority citation for part 165 continues to read as follows:

Authority: 46 U.S.C. 70034, 70051; 33 CFR 1.05–1, 6.04–1, 6.04–6, and 160.5; Department of Homeland Security Delegation No. 00170.1, Revision No. 01.2.

■ 2. Add § 165.T05–0040 to read as follows:

§ 165.T05–0040 Security Zone, Delaware River, Philadelphia, PA.

(a) *Location.* The following area is a security zone: All waters within the Delaware River, contiguous with the Pennsylvania shoreline and extending out into the Delaware River approximately 250 yards, within an area bounded by a line connecting the following points: Beginning at the Pennsylvania shoreline at latitude 39°56.87′ N, longitude 075°8.36′ W, thence east to latitude 39°56.85′ N, longitude 075°8.20′ W, thence south to latitude 39°56.45′ N, longitude 075°8.25′ W, thence west to the Pennsylvania shoreline at latitude 39°56.47′ N, longitude 075°8.41′ W, thence north following the shoreline to the originating point. These coordinates are based on North American Datum 83 (NAD83).

(b) *Definitions.* As used in this section—

Designated representative means any Coast Guard commissioned, warrant or petty officer who has been designated by the Captain of the Port Delaware Bay (COTP) to act on his or her behalf. The designated representative may be on an official patrol vessel or may be on shore and will communicate with vessels via VHF–FM radio or loudhailer. In addition, members of the Coast Guard Auxiliary may be present to inform vessel operators of the regulations in this section.

Very important person (VIP) means any person for whom the United States Capital Police request implementation of a security zone in order to supplement protection of said person(s).

Official patrol vessel means any Coast Guard, Coast Guard Auxiliary, State, or local law enforcement vessel assigned or approved by the COTP.

(c) *Regulations.* (1) In accordance with the general regulations contained in subpart D of this part, entry into or remaining in the zone described in paragraph (a) of section is prohibited unless authorized by the COTP, Sector Delaware Bay, or designated representative.

(2) Only vessels or people specifically authorized by the Captain of the Port, Delaware Bay, or designated representative, may enter or remain in the regulated area. Access to the zone will be determined by the COTP or designated representative on a case-by-case basis when the zone is enforced. To seek permission to enter, contact the COTP or the COTP's representative on VHF–FM channel 13 or 16. Those in the security zone must comply with all lawful orders or directions given to them by the COTP or the COTP's designated representative. No person may swim upon or below the surface of the water of this security zone unless authorized by the COTP or his designated representative.

(3) Upon being hailed by an official patrol vessel or the designated representative, by siren, radio, flashing light or other means, the operator of the vessel shall proceed as directed. Failure to comply with lawful direction may result in expulsion from the regulated area, citation for failure to comply, or both.

(4) Unless specifically authorized by on scene enforcement vessels, any vessel granted permission to enter or transit the security zones must comply with the instructions of the COTP or designated representative and operate at bare steerage or no-wake speed while transiting through the Security Zone, and must not loiter, stop, or anchor, and shall do so for the entirety of its time within the boundaries of the security zones.

(d) *Enforcement.* (1) This security zone is effective from 11 a.m. on March 9, 2022, through 11:59 p.m. on March 11, 2022.

(2) This security zone will be enforced with actual notice by the U.S. Coast Guard representatives on scene, as well as other methods listed in § 165.7. The Coast Guard will enforce the security zone created by this section only when it is necessary for the protection and security of the VIPs attending the Democratic National Caucus in the vicinity of Penns Landing located in Philadelphia, PA. The U.S. Coast Guard may be additionally assisted in the patrol and enforcement of the zone by Federal, State, and local agencies.

Dated: February 9, 2022.

Leon McClain, Jr.,

Captain, U. S. Coast Guard, Alternate Captain of the Port, Delaware Bay.

[FR Doc. 2022–03132 Filed 2–14–22; 8:45 am]

BILLING CODE 9110–04–P

DEPARTMENT OF VETERANS AFFAIRS

38 CFR Parts 3 and 4

RIN 2900–AQ72

Schedule for Rating Disabilities—Ear, Nose, Throat, and Audiology Disabilities; Special Provisions Regarding Evaluation of Respiratory Conditions; Schedule for Rating Disabilities—Respiratory System

AGENCY: Department of Veterans Affairs.

ACTION: Proposed rule.

SUMMARY: The Department of Veterans Affairs (VA) proposes to revise sections that address the ear, nose, throat, audiology, and respiratory systems. The purpose of these changes is to update medical terminology, incorporate medical advances that have occurred since the last review, and provide well-defined criteria in accordance with actual clinical practice. VA will also rename the body system currently designated for conditions related to hearing and the ear, to include the nose and throat. VA will also consolidate within the scope of otolaryngology several diagnostic codes (DCs) currently listed within the respiratory system.

DATES: VA must receive comments on or before April 18, 2022.

ADDRESSES: Comments may be submitted through

www.Regulations.gov. Comments received will be available at *www.Regulations.gov* for public viewing, inspection or copies.

FOR FURTHER INFORMATION CONTACT: Gary Reynolds, M.D., Medical Officer, Regulations Staff (210), Compensation Service, Veterans Benefits Administration, Department of Veterans Affairs, 810 Vermont Avenue NW, Washington, DC 20420, (202) 461–9700. (This is not a toll-free telephone number.)

SUPPLEMENTARY INFORMATION: As part of its ongoing revision of the Schedule for Rating Disabilities (VASRD, or the Rating Schedule), VA is proposing changes to the portions of the VASRD that address the audiology system, which VA last addressed in 1999 (see 64 FR 25202), as well as the respiratory system, which VA last addressed in 2006 (see 71 FR 52457). The proposed rule reflects advances in medical knowledge, recommendations from VA experts in audiology and respiratory conditions, and comments from experts and the public gathered during an October 2011 forum in New York City.

VA proposes to incorporate more current respiratory and auditory terminology and apply current standards of assessing and evaluating impairment. Where changes to the scientific and/or medical nature of a given condition have been proposed, VA has cited the published, publicly-available sources for these changes. The proposed changes are not a reflection of any particular expert's comments or recommendations but were based on published, peer-reviewed materials. Materials from the public forum are available for public inspection at the Office of Regulation Policy and Management (see the **ADDRESSES** section of this rulemaking), and other deliberative materials are cited herein.

VA also intends to reorganize the Rating Schedule so its classifications of injuries and diseases more closely resemble those used in health care. This reorganization involves moving several diagnostic codes (DCs) from ''The Respiratory System'' to a new body system designated as ''Ear, Nose, Throat, and Auditory Disabilities.''

I. The Respiratory System

A. Proposed Changes to 38 CFR 4.96

VA proposes to revise § 4.96 to clarify, simplify, and eliminate redundancies in the special provisions regarding respiratory conditions. Paragraph (a) currently precludes simultaneous ratings for specific coexisting respiratory conditions. VA proposes to amend paragraph (a) by simply stating that VA may not combine, under 38 CFR 4.25, Combined Ratings Table, coexisting respiratory conditions unless otherwise directed. Under this proposed rule, the only respiratory disability that VA may combine with other respiratory disabilities is DC 6847, sleep apnea. The proposed rule notes which DCs may be combined with DC 6847.

VA does not propose any change to current paragraph (b), which discusses veterans who received, or were entitled to receive, compensation for tuberculosis as of August 19, 1968.

VA proposes to remove paragraph (c), which deals with special monthly compensation (SMC) for complete organic aphonia. Complete organic aphonia, currently evaluated under DC 6519, is among those disabilities that VA is proposing to move to the new body system, ''Ear, Nose, Throat, and Auditory Disabilities,'' as DC 6230, with a footnote discussing SMC. Therefore, the respiratory system no longer requires this paragraph.

As a result of this deletion, VA intends to redesignate current paragraph (d) as paragraph (c). The current paragraph (d) provides information on the use of pulmonary function tests (PFTs) to evaluate the severity of certain respiratory conditions. As discussed in detail below, VA proposes to evaluate a number of respiratory conditions using a General Rating Formula for Respiratory Conditions (General Rating Formula), which reference various PFTs. As such, VA proposes to amend the subheading for revised § 4.96(c) to expand the list of all DCs that VA will rate using the General Rating Formula.

Within revised paragraph (c), VA proposes to amend subparagraph (1). Currently, § 4.96(d)(1)(ii) states that PFTs are not necessary when an individual is diagnosed with pulmonary hypertension, cor pulmonale, or right ventricular hypertrophy. A new DC addressing the requirements for ''pulmonary hypertension'' (discussed below) is being proposed herein. Furthermore, the proposed General Rating Formula for Respiratory Conditions includes METS as an evaluation criteria, which are the same evaluation criteria used in the General Rating Formula for Diseases of the Heart. This means cor pulmonale and right ventricular hypertrophy can both be evaluated within the respiratory system under its General Rating Formula. Therefore, the current subparagraph (d)(1)(ii) will no longer be necessary. With the absence of that subparagraph, VA proposes to redesignate current subparagraphs (d)(1)(iii) and (d)(1)(iv) as subparagraphs (c)(1)(ii) and (c)(1)(iii), respectively.

Current subparagraph (d)(2) discusses the use of diffusion capacity of the lung for carbon monoxide by the single breath method (DLCO (SB)). The new General Rating Formula and proposed pulmonary hypertension code have sufficient alternative criteria to evaluate respiratory disabilities when the DLCO (SB) is not available. VA may still consider using DLCO (SB) to evaluate respiratory disabilities, but VA will not require it and the examiner need not state why the test would not be useful or valid in a particular case. Accordingly, VA proposes to delete current subparagraph (d)(2).

VA proposes to remove current subparagraphs (d)(4) and (d)(5). These paragraphs discuss the need for post-bronchodilator studies during examinations, except in certain circumstances, and the need to utilize post-bronchodilator results as a more accurate value in evaluating respiratory disabilities. VA proposes to remove these subparagraphs because whether pre- or post-bronchodilator studies accurately reflect an individual's medical condition is a medical determination and therefore is more appropriately decided by a medical practitioner and/or examiner; this information should be considered as part of the medical record, to include treatment notes and/or examination. Therefore, there is no need to instruct rating personnel on the use of post-bronchodilator studies.

VA also proposes to remove current subparagraph (d)(7) because it is inaccurate. Obstructive respiratory disease may be present, ratable, and compensable even though both Forced Expiratory Volume in one second (FEV–1) and Forced Vital Capacity (FVC) are greater than 100 percent. *See* Matthew J. Hegewald and Robert O. Crapo, ''Pulmonary Function Testing,'' Murray and Nadel's Textbook of Respiratory Medicine 527–28 (5th ed. 2010).

As a result of the above deletions, VA intends to redesignate current subparagraph (d)(3) as (c)(2), and redesignate current subparagraph (d)(6) as (c)(3), with no substantive changes.

Finally, VA proposes to add a new paragraph (d), Respiratory conditions and comorbid cardiovascular conditions. A MET is defined as the amount of oxygen consumed by a person at rest. This measurement is used to calculate the energy cost of a specific activity in multiples of the amount of oxygen consumed by a person at rest. Oxygen consumption is possible through the integrated operation of two distinct body systems, the cardiovascular and respiratory systems. The respiratory system

captures and collects oxygen, while the cardiovascular system delivers the oxygen to muscles (including the heart itself) performing the work associated with a specific activity. See M. Jette. ''Metabolic Equivalents (METS) in Exercise Testing, Exercise Prescription, and Evaluation of Functional Capacity,'' 13(8) Clin. Cardiol. 555–65 (1990).

Typically, when disability affects either the cardiovascular or respiratory systems, it is easy to apportion disability using METs to the affected system. However, when both the cardiovascular and respiratory systems are involved, it is difficult to apportion the contribution to the observed disability by each system. To avoid the potential rating complications posed by situations where coexistent cardiovascular and respiratory disabilities can be evaluated using METs, VA will instruct raters to evaluate only one body system using METs and evaluate the other body system using criteria other than METs, absent instructions otherwise in individual DCs. (The evaluation levels for METs will be the same in both cardiovascular and respiratory systems—that is, the METs yielding a 60 percent evaluation level in the cardiovascular system will yield the same evaluation in the respiratory system.) The General Rating Formula for Respiratory Conditions in § 4.97 lists several types of test results that can be used to evaluate a respiratory condition. When METs are used to evaluate a respiratory disability under § 4.97, they will not be used to evaluate a comorbid cardiovascular disability under § 4.104, and vice versa. Raters will use METs in the evaluation of the disability that would provide the veteran with the most advantageous combined rating.

B. Proposed Changes to 38 CFR 4.97

This proposed rule addresses VA's outdated organization of the DCs within the current respiratory schedule. This rule also updates diagnostic naming conventions and evaluation criteria according to modern medical practice.

1. Removal of ''Diseases of the Nose and Throat''

VA proposes to remove the heading ''Diseases of the Nose and Throat.'' As discussed in more detail below, VA is relocating DCs 6502 through 6524, currently located under this heading, to 38 CFR 4.87, as they share similarities in features, impairment assessment, and severity levels. Such similarities are more closely related to the disability criteria that VA will propose for the ear, nose, and throat schedule.

2. General Rating Formula for Respiratory Conditions

VA also proposes adding the General Rating Formula to the beginning of the respiratory system. The proposed formula incorporates much of the criteria currently used by several DCs for respiratory conditions, notably DCs 6600, 6603, 6604, 6825 through 6833, and 6840 through 6845. VA designed the proposed General Rating Formula to more succinctly organize the Rating Schedule by referring applicable DCs to a single formula, rather than repeating the same formula after each DC to which it applies. The introduction of the General Rating Formula for Respiratory Conditions revises the criteria for multiple DCs.

VA derived the model for the General Rating Formula from the table entitled ''Pulmonary Dysfunction'' in Guides to the Evaluation of Permanent Impairment 88 (Robert D. Rondinelli et al. eds., 6th ed. 2008). The table defines four different levels of impairment severity based on FVC, FEV–1, DLCO (SB), Maximum Oxygen Consumption (VO2 Max), and METs. VA proposes to modify these levels to rate respiratory conditions. The General Rating Formula VA proposes will utilize common PFT findings, such as FEV–1, FVC, the ratio of FEV–1 to FVC (FEV–1/FVC), and DLCO (SB), and continue to utilize most of the levels found throughout current § 4.97, as they differ only slightly from the levels found in the ''Pulmonary Dysfunction'' table and are generally more advantageous to veterans.

One change from current § 4.97, however, is to require less of a reduction in FEV–1 to qualify for 100 percent disability rating (an FEV–1 of less than 45 percent of predicted value, rather than the current 40 percent), which is advantageous to veterans. Another is to no longer provide a 100 percent rating for outpatient oxygen therapy: The need for oxygen is not a sufficiently accurate measure of the severity of a disability to allow for a consistent evaluation without regard to other more objective measures.

VA also proposes to adjust the values for maximum oxygen consumption, which has a fixed relationship to METs (every 3.5 ml of oxygen consumed is equal to 1 MET). This modification will ensure equity with values already used in other body systems using METs to evaluate disability (in particular, the cardiovascular system). Finally, VA proposes to continue utilizing FEV–1/FVC as a PFT that can be used for rating purposes despite its absence from the ''Pulmonary Dysfunction'' table.

Note (1) to the proposed General Rating Formula will instruct rating personnel to base the impairment assessment on the criteria that reflects the greatest impairment and, therefore, the greatest evaluation. Note (2) will address combined ratings, consistent with proposed § 4.96(a).

Finally, VA will add Note (3) to the proposed General Rating Formula, which will address comorbid respiratory and cardiovascular disabilities in accord with proposed § 4.96(d). As noted above, raters may use METs to evaluate the respiratory disability under § 4.97 or the cardiovascular disability under § 4.104, but not both.

It should be noted that the General Rating Formula does not reference cor pulmonale and right ventricular hypertrophy. Under current § 4.97, some evaluation criteria reference cor pulmonale and right ventricular hypertrophy without an associated respiratory system disability. One of VA's goals with this revision is to ensure that all evaluation criteria within § 4.97 contain at least one element of respiratory disability. Thus, under the proposed rule, any cardiovascular disabilities incorporated within § 4.97 will be associated with at least one respiratory disability as part of any and all evaluation criteria.

3. Other Changes to § 4.97

In addition to incorporating the General Rating Formula, VA proposes a number of organizational changes to the respiratory system. Specifically, VA proposes removing the current headings and subheadings and reorganizing the VASRD Respiratory System under two broad headings. The first heading will be ''Intrinsic Lung Diseases.'' VA proposes to add seven subheadings under Intrinsic Lung Diseases: ''Airway Disorders (Trachea, Bronchi),'' ''Tuberculous Lung Diseases,'' ''Vascular Lung Diseases,'' ''Lung Neoplasms,'' ''Bacterial Lung Diseases,'' ''Parenchymal Lung Disease (Including Interstitium and Alveolar Spaces),'' and ''Mycotic Lung Diseases.'' The second heading that VA proposes is ''Other Respiratory Conditions.'' VA will include these remaining respiratory diagnoses in accordance with modern medical practice. *See* Peter D. Wagner et al., ''Ventilation, Blood Flow and Gas Exchange,'' Murray and Nadel's Textbook of Respiratory Medicine 53–88 (5th ed. 2010).

To help the reader understand VA's proposed changes to the individual DCs within the Respiratory System, VA has organized the following discussion by the seven subheadings under Intrinsic

Lung Diseases in the order of their appearance. VA will then discuss changes within the proposed Other Respiratory Conditions.

i. Airway Disorders (Trachea, Bronchi)

Current DCs 6600 through 6604 shall appear in their current order under this proposed rule after the subheading Airway Disorders (Trachea, Bronchi). VA proposes to modify the rating criteria for DCs 6600, 6601, 6603, and 6604 to refer to the General Rating Formula, which assesses severity using current medical understanding. As discussed above, VA is proposing a General Rating Formula to simplify evaluations and expand the criteria upon which to evaluate respiratory conditions, to include FEV–1 and METs. Regarding DC 6602, bronchial asthma, VA proposes to maintain most of the current evaluation criteria but reorganize how the VASRD presents the various criteria for improved usefulness. This reorganization is similar to the proposed General Rating Formula: Each evaluation requires meeting at least one of its criteria.

ii. Tuberculous Lung Diseases

VA proposes removing the heading ''Diseases of the Lung and Pleura-Tuberculosis'' and replacing it with ''Tuberculous Lung Diseases.'' VA proposes to retain the current subheadings, ''Ratings for Pulmonary Tuberculosis Entitled on August 19, 1968,'' ''Ratings for Pulmonary Tuberculosis Initially Evaluated After August 19, 1968,'' and their corresponding DCs. These changes organize the DCs along current medical practice.

VA will not substantively alter the criteria for evaluating tuberculosis for individuals entitled on August 19, 1968, though it will delete a statutory reference that no longer exists. It also will not substantively change the current rating instructions for chronic, active pulmonary tuberculosis (DC 6730). However, VA proposes to amend the evaluation criteria for DC 6731, Chronic, inactive primary pulmonary tuberculosis. The current criteria evaluate residuals ''as interstitial lung disease, restrictive lung disease, or, when obstructive lung disease is the major residual, as chronic bronchitis (DC 6600).'' The amended rule would refer specifically to the General Rating Formula and provide notes consistent with the language of current DC 6731. VA proposes this change because the General Rating Formula provides sufficient rating criteria for assessing residual lung function of this disorder. VA proposes no substantive change to DC 6732.

iii. Vascular Lung Diseases

VA proposes to replace the current heading, ''Nontuberculous diseases,'' with the subheading ''Vascular Lung Diseases.'' This arrangement will form the third subheading under ''Intrinsic Lung Diseases.'' VA also proposes that DC 6817, presently ''Pulmonary vascular disease,'' be renamed as ''Pulmonary thromboembolic disease.'' The new name reflects current medical terminology for the same condition. *See* Timothy A. Morris and Peter F. Fedullo, ''Pulmonary Thromboembolism,'' Murray and Nadel's Textbook of Respiratory Medicine 1186 (5th ed. 2010).

VA proposes the following changes to the criteria of DC 6817: (1) Removing ''primary pulmonary hypertension'' from the 100 percent evaluation criteria, because it will be rated under new DC 6849, (2) removing references to cor pulmonale, which can be adequately evaluated under the proposed General Rating Formula, (3) recharacterizing the current note as Note (1), (4) adding a note (Note (2)) prohibiting separate evaluations for pulmonary thromboembolic disease with right ventricular hypertrophy and selected comorbid cardiovascular conditions in order to avoid pyramiding, and (5) adding a note (Note (3)) outlining when a rating under DC 6817 can be combined with other ratings under § 4.97.

Additionally, VA proposes adding a new DC 6849 for ''Pulmonary hypertension.'' Currently, VA rates pulmonary hypertension analogously to other respiratory conditions. However, this common condition has its own features and treatments, so evaluations analogous to other respiratory DCs may be inadequate or inappropriate. As indicated previously, medicine assesses impairment by changes in right ventricular diameter, B-natriuretic levels, and mean pulmonary artery pressure. The rating criterion VA proposes for DC 6849 applies such measurements to this unique respiratory condition. VA proposes four levels of disability, similar to the levels of the proposed General Rating Formula. Where rating criteria METs levels conflict with other METs levels found within the cardiovascular system, the conflicting METs levels will conform to those found within the cardiovascular system. *See* Rondinelli, *supra* at 71–73.

Three notes would accompany DC 6849. The first would state that acute pulmonary hypertension is not a disability for ratings purposes. VA compensates disabilities that impair earning capacity, not temporary conditions that generally do not impact earning capacity. *See* 38 U.S.C. 1155; *Davis* v. *Principi,* 276 F.3d 1341, 1345–47 (Fed. Cir. 2002); *see also Moore* v. *Shinseki,* 555 F.3d 1369, 1373 (Fed. Cir. 2009). The second note would prohibit separate evaluations for pulmonary hypertension and selected coexisting cardiovascular conditions; instead, one rating would be assigned either under DC 6849 or under the appropriate cardiovascular DC (38 CFR 4.104), whichever represents the predominant disability. Compensating the same disability under two different body systems would represent pyramiding, which is impermissible under 38 CFR 4.14. The third note would outline when a rating under DC 6849 can be combined with other ratings under § 4.97.

iv. Lung Neoplasms

VA next proposes to reorganize DCs 6819, ''Neoplasms, malignant, any specified part of respiratory system exclusive of skin growths,'' and 6820, ''Neoplasms, benign, any specified part of respiratory system,'' under the proposed subheading ''Lung Neoplasms.'' DCs 6819 and 6820 are currently listed under ''Nontuberculous Diseases.''

VA also proposes to modify the note for DC 6819, which currently instructs rating personnel to evaluate residuals six months after the cessation of all forms of active treatment. VA intends to refer rating personnel to the General Rating Formula because this evaluation tool provides the most appropriate criteria for assessing residual impairment from a malignant lung neoplasm. Potential residuals include, but are not limited to, removal (resection) of a lung (in part or in whole) or persistent pleural effusions.

Similarly, VA proposes that DC 6820, benign neoplasms of the respiratory system, be rated under the General Rating Formula. Currently, DC 6820 directs rating personnel to ''Evaluate using an appropriate respiratory analogy.'' The General Rating Formula provides a broad range of alternative criteria with which to assess most respiratory conditions.

v. Bacterial Lung Diseases

VA proposes renaming the heading ''Bacterial Infections of the Lung'' to the subheading ''Bacterial Lung Diseases.'' DCs 6822 through 6824 will continue to appear under Bacterial Lung Diseases. VA does not propose any substantive criteria changes for the rating formula for these DCs.

vi. Parenchymal Lung Disease (Including Interstitium and Alveolar Spaces)

VA proposes to remove the current subheading, ''Interstitial Lung Disease,'' to add instead, ''Parenchymal Lung Disease (Including Interstitium and Alveolar Spaces).'' VA also proposes to relocate DC 6846 (Sarcoidosis) from the current ''Restrictive Lung Disease'' subheading to the newly proposed ''Parenchymal Lung Disease (Including Interstitium and Alveolar Spaces)'' subheading, as sarcoidosis is medically-categorized as a parenchymal lung disease. This new subheading reflects modern medical terminology for the associated DCs. In addition, VA proposes to rate these conditions under the General Rating Formula. This change will incorporate current medical standards for assessing impairment. By applying the General Rating Formula, VA proposes to expand the types of PFT results, to include FEV–1/FVC, and METs, to evaluate these conditions.

In addition, VA proposes to include a note for DCs 6825 through 6833 and DC 6846. This note instructs rating personnel to add an additional 10 percent to any rating during certain kinds of treatment, specifically, oral prednisone greater than 20 milligrams (mg) daily, or daily second-line immunosuppressive medication (*e.g.,* non-steroidal agents; such immunomodulatory drugs as azathioprine or cyclophosphamide; anti-fibrotic agents such as colchicine; penicillamine; or biologic agents such as etanercept). VA proposes to add this additional 10 percent rating because the treatments themselves may result in adverse effects involving the blood-forming organs or the gastrointestinal system. *See* M. Selman et al., ''Idiopathic Interstitial Pneumonias,'' Murray and Nadel's Textbook of Respiratory Medicine 1380–81 (5th ed. 2010).

VA also proposes to rename DC 6825, ''Diffuse interstitial fibrosis (interstitial pneumonitis, fibrosing alveolitis), to ''Diffuse interstitial fibrosis (interstitial pneumonitis, fibrosing alveolitis, idiopathic fibrosis).'' The proposed name reflects current medical terminology. See id. at 1370.

vii. Mycotic Lung Diseases

VA also proposes to rename ''Mycotic Lung Disease'' to ''Mycotic Lung Diseases'' and organize DCs 6834 through 6839 under this subheading. No substantive criteria changes are proposed for these diseases.

viii. Other Respiratory Conditions

The final organizational change VA proposes for the respiratory system is assembling all remaining respiratory disabilities under the heading ''Other Respiratory Conditions.'' VA will arrange DCs 6840 through 6847 under this heading.

In addition to moving these DCs under the new heading, VA proposes to rename DCs 6841 and 6842. Specifically, VA intends to rename DC 6841, currently ''Spinal cord injury with respiratory insufficiency,'' as ''Respiratory insufficiency due to spinal cord injury.'' As for DC 6842, ''Kyphoscoliosis, pectus excavatum, pectus carinatum,'' VA proposes to rename it as ''Pulmonary disease secondary to kyphoscoliosis, pectus excavatum, or pectus carinatum.'' Renaming these DCs clarifies that the primary disability is related to the respiratory system.

VA proposes that DCs 6840 through 6846 be rated under the General Rating Formula. This proposed change modifies the current criteria by, most notably, adding FVC and METs as additional measures. This proposed change favors veterans because it allows additional, alternative criteria to assess disability that do not currently exist in these DCs. As previously discussed, VA proposes to change these criteria to reflect current medical standards for assessing the severity of impairment.

VA also proposes to modernize the rating criteria for DC 6847, ''Sleep Apnea Syndromes (Obstructive, Central, Mixed)'' and retitle that DC as ''Sleep Apnea Syndromes (Obstructive, Central, or Mixed)''. The discipline of sleep medicine has greatly evolved since VA published the existing criteria. The American Academy of Sleep Medicine (AASM), founded since then, conducted in-depth, peer-reviewed research in conjunction with its partners to develop scientifically-refined criteria regarding the definition, measurement, and treatment of sleep apnea. Sleep apnea may be defined as complaints of unintentional sleep episodes and/or awakenings and/or snoring associated with an apnea-hypopnea index (AHI) equal to or greater than 5 per hour or, alternatively, an asymptomatic patient with an AHI greater than 15 per hour. *See* Richard B. Berry, Fundamentals of Sleep Medicine 238 (2012). Additional findings supporting a diagnosis of sleep apnea include oxygen desaturation greater than 4 percent and/or a reduction in airflow below 70 percent. Such measurements can evaluate the effectiveness of treatment intervention or lifestyle modifications such as weight loss.

VA proposes to extensively revise the rating criteria for sleep apnea to primarily provide compensation that is more compatible with earning impairment than the current criteria. The current criteria evaluate based upon treatment rather than actual impairment. VA currently assigns higher ratings to individuals when their physicians prescribe more intensive therapies, such as continuous airway pressure (CPAP) machines, without regard to whether individuals first tried more conservative therapies, such as weight loss or oral appliances, or what actual impairment continues following use of CPAP machines. As discussed below, VA's proposed criteria will focus on the result rather than the type of treatment. Hence, individuals whose treatments are equally effective will receive equal disability ratings, regardless of the treatments. Individuals for whom treatment similarly fails (or is only partially effective) will also receive similar ratings. These proposed changes for sleep apnea comply with 38 U.S.C. 1155 that the VASRD ratings reflect average losses in earning capacity.

Specifically, VA proposes to assign a 0 percent evaluation when sleep apnea syndrome is asymptomatic, with or without treatment. VA would assign a 10 percent evaluation when treatment yields ''incomplete relief.'' VA would assign ratings above 10 percent (*e.g.,* 50 and 100 percent) only when treatment is either ineffective or the veteran is unable to use the prescribed treatment due to comorbid conditions. VA would assign a 100 percent evaluation only if there is also end-organ damage. VA proposes to include an informational note that defines and gives examples of qualifying comorbid conditions, *i.e.,* conditions that, in the opinion of a qualified medical provider, directly impede or prevent the use of, or implementation of, a recognized form of treatment intervention normally shown to be effective.

VA proposes to add a new DC 6848 for ''Lung transplantation.'' Lung transplantation involves a unique treatment that is not addressed in the current Rating Schedule. This procedure for a service connected pulmonary condition results in significant disability that is not adequately captured by the current rating schedule. For one, recovery with pulmonary function testing performance usually takes about 12 months. Yet outcome studies reveal significant variation in return to work time. This can be explained when you look at the two main populations receiving lung

transplants. There is a population who receive the lung transplant due to hereditary/genetic conditions that would preclude military service all together (such as cystic fibrosis), and another population who receive a lung transplant due to acquired conditions (such as chronic obstructive pulmonary disease). VA believes the population with lung transplantation due to acquired conditions is a better characterization of the population of veterans who might receive this procedure and thus would be eligible for compensation. On this basis, VA intends to assign a 100 percent evaluation for lung transplantation surgery, and for one year following discharge from the hospital for such surgery. Thereafter, consistent with other respiratory conditions, VA will base the evaluation on residuals according to the proposed General Rating Formula, but with a minimum evaluation of 30 percent. *See* Lisa Cicutto et al., ''Factors Affecting Attainment of Paid Employment After Lung Transplantation,'' 23 J. Heart Lung Transplant 481–86 (2004); *see also* Dmitry Tumin et al., ''Attained Functional Status Moderates Functional Outcomes of Return to Work After Lung Transplantation,'' 194 Lung 437–45 (2016).

II. Ear, Nose, Throat, and Audiology Disabilities

Otolaryngology is the field of medicine concerned with diseases of, and injury to, the ears, nose, and throat. Currently, the VASRD spreads these diseases and conditions among several systems. This disbursement of diseases and conditions amongst several body systems does not represent the current scientific and medical understanding of the specific anatomy, etiology, and disabling effect of diseases and conditions of the ears, nose, and throat. Reorganization of these diseases and conditions to reflect current medical and scientific practice improves rating efficiency and effectiveness by allowing for easy identification of the medical source for each rating and reducing the need to rely on analogous codes when evaluating certain disabilities.

The system titled ''Impairment of Auditory Acuity,'' found at 38 CFR 4.85–4.87, already includes conditions of hearing and the ear, including the symptom of tinnitus (ringing in the ear), hearing loss, vestibular disorders (dizziness), neoplasms (tumors), and infections. For the reasons discussed above, VA proposes to rename the body system ''Ear, Nose, Throat, and Auditory Disabilities'' and relocate 16 DCs from § 4.97, the Respiratory System, to § 4.87. Under § 4.87, VA will redesignate DCs 6502 through 6524 as DCs 6220 through 6235, respectively. VA discusses in more detail below any changes to the sections and/or DCs under this new arrangement (*e.g.,* §§ 4.85 through 4.87).

A. Audiology and Hearing Loss

1. Defining Hearing Loss Disability

VA considered expanding the current definition of hearing loss, located at 38 CFR 3.385, to include the concept of acoustic ''notches'' (see below). However, VA concluded that the current definition of hearing loss is sufficient and fair for evaluating levels of disability.

Noise exposure is often associated with a pattern of hearing loss across frequencies referred to as ''noise notches'' or a ''notch.'' According to a 2006 Institute of Medicine (IOM) study, a noise notch typically shows hearing that is normal or nearly normal at lower frequencies (less than 2000 Hertz (Hz)), with worse hearing thresholds typically occurring at frequencies in the 3000–6000 Hz region, with better hearing thresholds at 8000 Hz. IOM, Noise and Military Service: Implications for Hearing Loss and Tinnitus 38 (The National Academies Press, 2006). A notched pattern in the 3000–6000 Hz frequency region, together with supporting evidence from a detailed case history, can lead to the diagnosis of noise-induced hearing loss. However, this characteristic pattern in the high frequencies is not limited to noise-induced hearing loss. The high-frequency hearing loss pattern from aging is indistinguishable from the cumulative effects of noise-induced hearing loss. *See* Linda M. Luxon, ''The clinical diagnosis of noise induced hearing loss,'' Biological Effects of Noise 83–113 (Deepak Prasher and Linda Luxon eds. 1998); Victor Osei-Lah and L.H. Yeoh, ''High-frequency audiometric notch: an outpatient clinic survey,'' 49(2) Int'l J. of Audiology 95–98 (2010).

More recent publications examined noise notches in the veteran population to again define the presence or absence of a noise notch more objectively than by simply relying on the visual pattern of high frequency hearing loss. *See, e.g.,* Richard H. Wilson and Rachel McArdle, ''Characteristics of the Audiometric 4,000 Hz Notch (744,553 veterans) and 3,000, 4,000 and 6,000 Hz Notches (539,932 veterans),'' 50 J. of Rehabilitative Research and Development 111–32 (2013); Ross Coles et al., ''Guidelines on the diagnosis of noise-induced hearing loss for medicolegal purposes,'' 25(4) Clin. Otolaryngology 264–73 (2000). However, the observed pattern of hearing loss in these studies neither rebutted nor confirmed noise injuries. In the Wilson and McArdle study, nothing indicated that notched audiograms were characteristic of audiograms in veterans of any age. Similarly, Coles et al. noted that the presence of notches was not indicative of noise exposure because such configurations were found in people with no significant noise exposure and not in persons with known exposure. Given the results of these studies, VA concludes that including notches in a definition of hearing loss disability would not rationally justify compensation benefits to veterans. Therefore, VA proposes no substantive changes to the current definition in § 3.385.

2. Proposed Changes to Audiology

Although VA will not alter its definition of hearing loss for compensation purposes, it proposes several updates of the current terminology found in 38 CFR 3.385, 4.85–4.86. VA also proposes a note to § 4.85 adding a 10 percent evaluation for noncompensable hearing loss with tinnitus present, where tinnitus is related to the diagnosis of hearing loss.

i. Terminology Updates

VA proposes a number of nonsubstantive changes for readability and to update terminology according to current medicine. VA proposes to replace the terms ''speech recognition'' and ''speech discrimination'' with ''word recognition'' in § 3.385 and throughout § 4.85. Although used interchangeably, the term most frequently used today is ''word recognition.''

VA also proposes to replace the term ''hearing impairment'' or ''impaired hearing'' with ''hearing loss'' throughout Part 3 and Part 4, as ''hearing loss'' is more commonly used today.

In addition, VA proposes to change the spelling of ''puretone'' throughout §§ 4.85 and 4.86, to include tables VI and VIA. According to Dorland's Illustrated Medical Dictionary 179 (32d ed. 2012), two words form the correct spelling, *i.e.,* ''pure tone'' or, as a compound adjective before the noun, ''pure-tone threshold.''

During the October 2011 audiology forum, VA received a recommendation to clarify the units that it uses to measures hearing loss. Therefore, VA also proposes to add to 4.85, paragraph (a), ''Hearing levels are measured in decibels and expressed as dB HL.''

Finally, VA proposes to replace the term ''rating veterans service representative'' in § 4.86 with ''rating

activity.'' This terminology update recognizes that not all claims are adjudicated by a rating veterans service representative (RVSR); some decisions are rendered by a decision review officer (DRO) or another individual with the proper authority to adjudicate a claim for benefits. This terminology update does not otherwise change the application of the provisions in § 4.86.

ii. Pure-Tone Air Conduction Threshold

Currently, VA evaluates hearing loss using pure-tone thresholds, but no regulation specifies the type of measurement. Audiology pure-tone threshold uses either air or bone conduction testing. *See* Joe Walter Kutz Jr. et al., ''Audiology Pure-Tone Testing,'' *Medscape Reference, http://emedicine.medscape.com/article/1822962-overview#showall* (last visited July 24, 2018). VA proposes to clarify that pure-tone thresholds refer to air conduction thresholds throughout §§ 3.385, 4.85, and 4.86, to include tables VI and VIA. VA chose this particular technique because it measures the usual mode of hearing. On the other hand, bone conduction testing is simply a diagnostic tool and one of a battery of tests by which audiologists determine the etiology and severity of hearing loss. To reflect this change, VA proposes to replace the term ''puretone threshold'' with ''pure-tone air conduction threshold'' wherever it appears in §§ 4.85 and 4.86. Similarly, VA also proposes to replace the references to ''auditory'' thresholds in § 3.385 with ''pure-tone auditory air conduction'' thresholds.

iii. Word Recognition Testing

Current § 4.85(c) provides that ''Table VIA will be used when the examiner certifies that use of the speech discrimination test is not appropriate because of language difficulties, inconsistent speech discrimination scores, etc., or when indicated under the provisions of § 4.86.'' VA proposes to clarify the term ''language difficulties'' with the addition of the phrase ''*e.g.,* English non-fluency.'' Several VA audiology experts with whom the Veterans Benefits Administration consulted noted that the most common language difficulty in service members is that their first language is not English, thus invalidating the speech discrimination scores. Additionally, an increased number of service members have cognitive difficulties resulting from traumatic brain injuries. These injuries result in decreased speech discrimination scores. *See, e.g.,* Henry L. Lew et al., ''Audiology dysfunction in Traumatic Brain Injury,'' 44(7) J. of Rehabilitation Research & Development 921–28 (2007). Therefore, VA also proposes to add ''cognitive difficulties'' to the list of reasons why word recognition testing may be inappropriate.

iv. Percentage Evaluation for Hearing Loss (Diagnostic Code 6100)

VA proposes to revise the evaluation criteria for this DC in order to provide (1) a 10 percent rating for tinnitus associated with service-connected, noncompensable hearing loss, and (2) two notes pertaining to tinnitus. Tinnitus is defined as the perception of sound in the absence of an external source. In many cases, the patient cannot identify the onset or cause of the tinnitus. J.L. Stouffer and Richard S. Tyler, ''Characterization of tinnitus by tinnitus patients,'' 55(3) J. of Speech and Hearing Disorders, 439–53 (Aug. 1990). However, current medicine reflects that tinnitus likely results from abnormal neural activity at some point or points in the auditory pathway, which is incorrectly interpreted by the brain as an actual sound. *Id.* As a result, it is a symptom associated with an underlying condition, such as hearing loss, Meniere's disease, traumatic brain injury and cerebral atherosclerosis, not an independent disease. *Id.*

Recognition of tinnitus for evaluation purposes dates back to at least 1925, when raters were instructed to ''add 15 [percent] to loss of hearing as a combined rating.'' ''The Schedule for Rating of Disability Ratings,'' U.S. Veterans' Bureau, Table II, p.59 (1925 ed.). Accordingly, tinnitus was rated in conjunction with hearing loss, rather than a disease in and of itself. In a final rule published in 1976, VA's rating criteria recognized tinnitus for evaluation purposes when ''[p]ersistent as a symptom of head injury, concussion, or acoustic trauma.'' 41 FR 11291, 11298 (Mar. 18, 1976). In a final rule published in 1999, in part motivated by an effort to standardize tinnitus evaluations beyond these three specific injuries, the regulation was changed to award a single 10 percent evaluation without mention of the underlying condition resulting in tinnitus. 64 FR 25202, 25206 (May 11, 1999). While not intended by VA, this rulemaking created the impression that tinnitus is an independent condition, rather than a symptom associated with an underlying condition. VA's intent with the presently proposed revision is to accurately restore the medically-supported relationship between tinnitus and an underlying pathology, consistent with current medical practice.

VA proposes to evaluate tinnitus only as part of its underlying pathology and to delete DC 6260 entirely. In other words, tinnitus will be compensated through application of DCs 6100, 6204, 6205, 8045, 8046, or 9305, depending on its service-connected cause. For tinnitus associated with service-connected hearing loss in particular, the presence of tinnitus generally does not impact earning capacity beyond what is already contemplated at the compensable levels of hearing loss, though VA recognizes that the presence of tinnitus combined with noncompensable hearing loss could have more than a 0% impact on earning capacity. Thus, DC 6100 will provide a 10% evaluation for tinnitus associated with hearing loss only when hearing loss is noncompensable (only when hearing loss, on its own, does not warrant a 10% evaluation or higher). If hearing loss is compensable (warranting a 10% evaluation or greater), an additional 10% evaluation for tinnitus associated with the hearing loss shall not be assigned.

To that end, VA will add two notes under DC 6100. The first note will list examples of which disabilities contemplate tinnitus as a symptom of a given underlying pathology. The second note will provide that tinnitus is only compensated as part of an underlying service-connected condition. VA notes that this proposal will have no impact on veterans currently in receipt of service connection for tinnitus under DC 6260; these evaluations are governed under the provisions of 38 CFR 3.951(a).

v. DC 6100 and Extraschedular Consideration

In *Doucette* v. *Shulkin,* 28 Vet. App. 366, 373 (2017), the U.S. Court of Appeals for Veterans Claims noted the potential value if VA ''provide[d] additional guidance on what symptoms the rating criteria [for hearing loss] contemplate.'' *Doucette* involved a veteran who argued for extraschedular consideration under 38 CFR 3.321(b)(1) because his hearing loss resulted in difficulty distinguishing sounds in a crowded environment, locating the source of sounds, understanding conventional speech, hearing the television, and using the telephone. *Id.* at 371. The court held that such functional effects of decreased hearing and difficulty understanding speech in an everyday environment were contemplated by the schedular rating criteria, *id.* at 369, 371–72, though a dissenting judge argued that the ''criteria are inadequate to contemplate a veteran's functional effects and entire disability picture.'' *Id.* at 374 (Schoelen, J., dissenting).

In response to the court's statement concerning additional guidance, we clarify here that DC 6100 contemplates all natural or expected effects of decreased hearing. It is expected and natural that a veteran with hearing loss like Mr. Doucette will, for example, experience difficulties distinguishing sounds or using the telephone. The schedule was designed to determine a veteran's level of hearing loss disability through objective testing and match it to a disability rating that compensates for the average impairment in earning capacity associated with that level of disability. 38 U.S.C. 1155; 38 CFR 4.1, 4.10, 4.85. To the extent a particular veteran's hearing loss may seem more impactful than the rating provided, that is characteristic of a schedule that compensates for ''the average impairments of earning capacity''—it is not an indication that the schedule is inadequate. 38 U.S.C. 1155.

When a symptom of a hearing loss disability properly rated under this code is unusual or exceptional for that disability, and not contemplated by the code, there are alternative methods to ensure that a veteran is adequately compensated. First, if the symptom of the hearing loss disability implicates a disability addressed elsewhere in the schedule, an evaluation may be appropriate under the listed diagnostic code which accounts for the disability. If the symptom implicates a disability that is not listed in the schedule, an evaluation may be appropriate by analogy using a closely related disease or injury, giving due consideration to the functions affected, anatomical localization, and symptomatology. 38 CFR 4.20. In such a case, because another diagnostic code in the schedule addresses a disability analogous to the disability implicated by the symptom, the schedule is not inadequate to rate the veteran's disability. Finally, if the unusual or exceptional symptom of the hearing loss disability does not implicate any other provision or code in the schedule (either directly or through analogy), the schedule may not contemplate the hearing loss disability presented; and 38 CFR 3.321(b)(1) may be considered.

B. Ear, Nose, and Throat Disabilities—Proposed Changes to § 4.87

As noted above, VA proposes to relocate a number of conditions from § 4.97 to § 4.87. It also intends to update several of the relocated codes, as well as DCs already included in § 4.87, to ensure that the medical descriptions reflect the most current knowledge, practice, and standards of care, and that the criteria determining the levels of compensation provide fair and accurate benchmarks for veterans. As VA intends to relocate a number of conditions affecting the nose, throat and larynx (voice box) to § 4.87, VA proposes to retitle this section from ''Schedule of ratings—ear'' to ''Schedule of ratings—ear, nose, and throat.''

1. Diagnostic Code 6200

VA proposes to revise the note under this DC from ''Evaluate hearing loss, and complications such as labyrinthitis, tinnitus, facial nerve paralysis, or bone loss of skull, separately.'' to ''Evaluate hearing loss and complications such as labyrinthitis, facial nerve paralysis, or bone loss of skull, separately.'' This revision is necessary as tinnitus associated with hearing loss is now contemplated under DC 6100.

2. Diagnostic Code 6202

VA currently evaluates otosclerosis under DC 6202. To ensure greater consistency in decision making, VA proposes to rename this code to include residuals of stapedectomy and stapedotomy. Surgeons perform these procedures involving the middle ear to prevent further deterioration of hearing caused by otosclerosis by improving the movement of sound to the inner ear. The primary residual of stapedectomy and stapedotomy is continued hearing loss, albeit without further deterioration of hearing, so VA may evaluate these conditions similarly to otosclerosis by the degree of the hearing loss. *See* S. George Lesinski, ''Causes of Conductive Hearing Loss After Stapedectomy or Stapedotomy: A Prospective Study of 279 Consecutive Surgical Revisions,'' 23(3) Otology & Neurotology 281–88 (May 2002).

3. Diagnostic Code 6204

Peripheral vestibular disorders (DC 6204) may originate in one or both ears and may cause varying degrees of disability. B. Gurr and N. Moffat, ''Psychological consequences of vertigo and the effectiveness of vestibular rehabilitation for brain injury patients,'' 15 Brain Injury 387 (2001); Hannelore K. Neuhauser et al., ''Burden of dizziness and vertigo in the community,'' 168 Archives of Internal Medicine 2118 (2008). DC 6204 currently evaluates such disorders using only dizziness and staggering (*i.e.,* alteration of gait). VA therefore proposes to amend DC 6204 to better reflect the full scope of these disorders and their effect on a veteran's ability to work and engage in other activities that impact earning capacity.

Specifically, VA proposes to provide increasingly higher ratings depending on the impact of a veteran's vestibular disorder on activities of self-care. VA may evaluate self-care activities for the purposes of this DC using assessments by qualified health care providers that address the capacity to bathe, dress, eat, manage hygiene, and/or move the body from place to place. VA will also evaluate the ability to work, to include whether the veteran requires significant modification and/or accommodation to accomplish tasks. Additionally, VA intends to expand the current disability evaluation levels from two (10 and 30 percent) to three (10, 30, and 100 percent); the 100 percent evaluation will include veterans whose vestibular disorders severely impact their life and result in the substantial inability to work.

The proposed criteria provide a 10 percent evaluation for a documented vestibular disorder with symptoms during the last six months that require brief and temporary modification of activity but do not prevent continuation of normal activities such as self-care and/or work. VA proposes a 30 percent evaluation for symptoms that occur with sufficient frequency to require routine limitation in activities, which the individual can overcome with effort and some modification and/or accommodation. VA proposes a 100 percent evaluation for symptoms that result in an inability to independently perform self-care and/or work activities, even with modification of activity or accommodation. Finally, VA proposes two notes for this DC—one defining self-care activities and another continuing this DC's current requirement of objective findings supporting the diagnosis.

4. Diagnostic Code 6205

Originating in the inner ear, the specific causes of Meniere's syndrome (DC 6205) remain unclear. However, the effects, which may include vertigo, tinnitus, hearing loss, and unstable gait, may impact a veteran's earning capacity. The current rating criteria for DC 6205 provide for 30, 60, and 100 percent evaluations depending upon the presence of hearing loss and the frequency of attacks of vertigo and cerebellar gait. Alternatively, rating personnel must separately evaluate vertigo (as a peripheral vestibular disorder) and hearing loss if a higher combined rating for Meniere's syndrome results.

VA does not intend to significantly alter the current rating criteria for DC 6205. However, it does propose to change evaluative criteria so they are consistent and clear. VA proposes to alter the frequency for the 100 percent evaluation from ''more than once

weekly'' to ''five or more times a month'' to be consistent with the monthly timeframes provided in the 30 and 60 percent levels. VA also proposes to eliminate the current reference to ''attacks of vertigo and cerebellar gait.'' Individuals with Meniere's syndrome experience attacks of dizziness (or vertigo) that appear suddenly but may or may not result in gait disturbance. *See* ''Meniere's disease,'' National Institute on Deafness and Other Communication Disorders, *https://www.nidcd.nih.gov/health/balance/pages/meniere.aspx* (last visited July 24, 2018). Occasionally, however, an individual's vertigo is so extreme and frequent that it results in disequilibrium or gait instability. *Id.* Therefore, VA proposes to include vertigo in all evaluation levels, with the only reference to gait being the 100 percent evaluation. VA proposes a 100 percent evaluation for hearing loss with either persistent disequilibrium and gait instability, or with vertigo occurring five or more times a month. Finally, VA proposes to reorganize the criteria within each evaluation for improved clarity and usability. Specifically, VA notes that each evaluation currently includes hearing loss. The crucial point is the frequency of vertigo or, for a 100-percent evaluation, the presence of persistent disequilibrium. VA proposes to reorganize the criteria to emphasize this.

VA intends to amend the current note to DC 6205 and redesignate it as Note (3). For reasons explained in this preamble's discussion of tinnitus, proposed Note (3) will no longer include any reference to a separate evaluation for tinnitus.

To ensure consistent evaluations, VA proposes to include a new Note (1), which will indicate that the Meniere's diagnosis must be made by a otolaryngologist or neurologist. *Id.* The requirement for a specialist evaluation is based on the complexity of the diagnostic work up. This work up is best performed by those whose focus is on this area of medical care, as opposed to a provider without focused expertise, to ensure the proper diagnostic assessment is made. In addition, VA proposes a new Note (2) to direct rating personnel to calculate the average vertigo frequency using a six-month period. This period ensures that the assigned evaluation represents the average level of impairment, taking into account occasional flare-ups that may not represent a true increase in the overall severity of the disease.

5. Diagnostic Code 6260

As previously noted under revisions to § 4.85, VA proposes to remove DC 6260.

6. Relocated Diagnostic Codes

As previously noted, VA proposes to move 16 conditions from § 4.97 (the Respiratory System) to § 4.87 (the proposed ENT System). VA will redesignate these DCs, currently designated 6502 through 6524, as DCs 6220 through 6240, respectively. VA proposes to change the evaluation criteria for a number of these relocated DCs. However, VA proposes no substantive changes to the following codes: DC 6502, Septum, nasal, deviation of (proposed DC 6220); DC 6515, Laryngitis, tuberculous, active or inactive (proposed DC 6227); DC 6516, Laryngitis, chronic (proposed DC 6228); DC 6518, Laryngectomy, total (proposed DC 6229); DC 6519, Aphonia, complete organic (proposed DC 6230); and DC 6521, Pharynx, injuries to (proposed DC 6232). VA will update accordingly any references to these DCs within other codes.

i. Diagnostic Code 6504

In relocating DC 6504, loss of part of the nose or nasal scars, to § 4.87, VA proposes to redesignate it as DC 6221. The current criteria for DC 6504 assign 10 or 30 percent evaluations based on the exposure of nasal passages, loss of ala (the wings of the nose), or other obvious disfigurement. This focus on loss of particular nasal parts, rather than on the overall quantifiable loss of nasal tissue and/or structure, may result in inconsistent evaluations for similarly disabling conditions. As such, VA proposes to assign evaluations based on defined loss of the nose (*i.e.,* more or less than half). Additionally, because the use of nasal prosthetics often has a positive impact on an individual's psychosocial functioning, VA proposes to incorporate the mitigating value of any nasal prosthetics used. VA intends to provide for higher ratings when the loss is not amenable to the use of prosthesis. *See* Satyabodh S. Guttal et al., ''Interim Prosthetic Rehabilitation of a Patient Following Partial Rhinectomy: A Clinical Report,'' 4(4) European J. of Dentistry 482, 482–83 (Oct. 2010).

Under the proposed criteria, VA would assign a 0 percent evaluation for any loss or disfigurement of the nose for which a qualified medical provider does not require or recommend a prosthesis. VA would assign a 10 percent evaluation for any loss of the nose for which a qualified medical provider requires or recommends a prosthesis and the patient is capable of using it. VA proposes a 20 percent evaluation for a loss that a prosthesis cannot treat (as documented by a qualified provider) and that loss involves less than 50 percent of the nose. Finally, VA proposes a 30 percent evaluation for a loss that a prosthesis cannot treat (as documented by a qualified provider) and that loss involves at least 50 percent or more of the nose. VA intends to retain the current note directing rating personnel to alternatively evaluate any loss or scar under DC 7800, disfiguring scars of the head, face, or neck.

ii. Diagnostic Codes 6510, 6511, 6512, 6513, and 6514

Current DCs 6510 through 6514 all refer to various types of chronic sinusitis evaluated using the General Rating Formula for Sinusitis, located under DC 6514. VA proposes to redesignate these codes as DCs 6222 through 6226, respectively, under § 4.87; additionally, VA proposes to rename each code to reflect current medical terminology. VA proposes to rename the redesignated DC 6222 as ''Rhinosinusitis, pansinusitis.'' VA proposes to rename the redesignated DC 6223 as ''Rhinosinusitis, ethmoid.'' VA proposes to rename the redesignated DC 6224 as ''Rhinosinusitis, frontal.'' VA proposes to rename the redesignated DC 6225 as ''Rhinosinusitis, maxillary.'' VA proposes to rename the redesignated DC 6226 as ''Rhinosinusitis, sphenoid.'' VA also proposes to reflect current medical terminology by renaming the General Rating Formula for Sinusitis as General Rating Formula for Chronic Rhinosinusitis and Recurrent Acute Rhinosinusitis. VA will place this renamed rating formula immediately before the redesignated DC 6222.

To modernize the rating schedule in regard to chronic sinusitis, VA will first introduce current medical terminology and definitions. Rhinosinusitis is defined as symptomatic inflammation of the paranasal sinuses and nasal cavity. Modern medicine understands three different clinical presentations of inflamed nasal passages and sinuses (rhinosinusitis): Acute, recurrent acute, and chronic. Richard M. Rosenfeld et al., ''Clinical practice guideline: Adult sinusitis,'' 137(3 Supp.) Otolaryngology-Head and Neck Surgery S19, Table 10 (2007).

Acute rhinosinusitis (ARS) is defined as up to four weeks of purulent drainage (anterior, posterior, or both) accompanied by nasal obstruction, facial fullness, or both. Acute rhinosinusitis can occur as viral rhinosinusitis (or VRS, defined as rhinosinusitis caused by a virus and

typically lasting less than 10 days). Acute rhinosinusitis can also occur as acute bacterial rhinosinusitis (or ABRS, defined as a bacterial infection that causes symptoms of rhinosinusitis for at least 10 days after the onset of an upper respiratory infection or causes recurrence of symptoms within seven days after initial improvement). If rhinosinusitis symptoms last at least four but less than 12 weeks, it is defined as subacute rhinosinusitis (SAR). *Id.*

Recurrent acute rhinosinusitis (RARS) is defined as four or more episodes of ABRS without signs or symptoms of rhinosinusitis between episodes. *Id.*

Finally, chronic rhinosinusitis, or CRS, is defined as 12 weeks or more of at least two of the following—mucopurulent drainage (anterior, posterior, or both); nasal obstruction (congestion); facial pain-pressure-fullness; or decreased sense of smell—in combination with inflammation as documented by at least one of the following: Purulent mucus (not clear) in the middle meatus or ethmoid region; polyps in the nasal cavity or the middle meatus; or radiographic imaging showing inflammation of the paranasal sinuses. *Id.*

VA compensates disabilities that impair earning capacity, not temporary conditions that generally do not impact earning capacity. *See* 38 U.S.C. 1155; *Davis,* 276 F.3d at 1345–47; *see also Moore,* 555 F.3d at 1373. In that regard, CRS and RARS are distinguishable from ARS and SAR. To assist the public and rating activity in better understanding what disabilities are compensated under this General Rating Formula, VA proposes to include a note identifying which conditions are eligible for compensation and another note specifying which conditions are explicitly excluded from compensation.

The present rating criteria evaluate chronic sinusitis predominantly on the frequency of ''incapacitating episodes,'' which includes prolonged antibiotic treatment, as well as the need for ''bed rest'' and ''treatment by a physician.'' Current standards of medical care, however, no longer describe incapacitating episodes or bed rest as treatment. VA therefore proposes to retain those elements of the existing criteria—namely, frequency/duration of antibiotic treatment—that still relate to current medical practice and eliminate reference to incapacitating episodes. VA also proposes to retain the 50 percent criteria that require unresponsiveness to surgery to reflect the severity of disability that accompanies that rating level.

In light of the above, VA's proposed General Rating Formula for Chronic Rhinosinusitis (CRS) and Recurrent Acute Rhinosinusitis (RARS) will retain the same rating levels as the current General Rating Formula for Sinusitis (*i.e.,* 0, 10, 30, and 50 percent). The criteria begin with a 50 percent evaluation granted for CRS/RARS which requires 12 weeks or more of treatment with antibiotics and unresponsiveness to surgical intervention with endoscopy or other surgical procedure designed to treat CRS/RARS. A 30 percent evaluation will be granted for CRS/RARS that requires 12 weeks or more of treatment with antibiotics during the preceding 12-month period. A 10 percent evaluation will be granted for CRS/RARS which requires antibiotic treatment for at least four weeks but less than 12 weeks during the preceding 12-month period. Finally, a 0 percent evaluation will be granted when there has been less than four weeks treatment with antibiotics during the preceding 12-month period. Rosenfeld, *supra,* at S1–31; *see also* Thomas A. Tami, ''Granulomatous Diseases and Chronic Rhinosinusitis,'' 38 Otolaryngol. Clin. N. Am. 1267–78 (2005).

Finally, DC 6514 currently contains a note that defines an ''incapacitating episode'' for purposes of assigning evaluations. The proposed criteria above render this note no longer necessary, so VA proposes to delete it.

iii. Diagnostic Code 6520

VA proposes to redesignate stenosis of the larynx, currently evaluated under DC 6520, as DC 6231. It also proposes to amend the rating criteria for this DC, which will result in evaluations based upon the measured degree of stenosis, rather than the current utilization of PFTs. While stenosis of the trachea may affect PFTs, many other diseases may also impact them. Advances in diagnostic devices, including fiber optics, have improved visualization of the larynx and its associated structures and allowed more accurate assessment of anatomy. L. Sulica, ''Hoarseness,'' 137 Archives of Otolaryngology-Head and Neck Surgery 616 (2011). Hence, VA proposes to update its evaluative criteria.

Specifically, VA proposes to evaluate partial obstruction of the larynx with less than 25 percent narrowing of the airways as 30 percent disabling. VA proposes a 50 percent evaluation for partial obstruction of the larynx, with 25 percent to less than 50 percent narrowing of airways. Partial obstruction of the larynx, with 50 percent or more narrowing of airways, will warrant a 70 percent evaluation. Finally, VA proposes to assign a 100 percent evaluation for obstruction of the larynx, requiring permanent tracheostomy. VA will retain the current note allowing for an alternative evaluation as aphonia. VA notes that research indicates airway cross-sectional area reduced by 50 percent or more impairs breathing. *See* Sylvia Verbanck et al., ''Detecting upper airway obstruction in patients with tracheal stenosis,'' 109 J. of Applied Physiology 47 (July 2010). As such, obstruction less than 50 percent reflects no more than moderate disability (*i.e.,* warranting a 30 or 50 percent evaluation).

iv. Diagnostic Code 6522

The current DC 6522 is ''Allergic or vasomotor rhinitis'' and VA will rename it ''Rhinitis, allergic or nonallergic (vasomotor).'' VA proposes to redesignate this DC as 6240 under § 4.87. VA also proposes to modify the rating criteria to reflect current medical understanding and practice. First, VA proposes to modify the criteria for a 10 percent rating to require continuous therapy (almost always self-administered) to control symptoms. VA also proposes a 30 percent rating for the presence of polyps, preserving the prior rating criteria. VA will add a note that directs personnel to rate under proposed DC 6233 (rhinosinusitis, allergic and nonallergic (vasomotor) related) using the General Rating Formula for Rhinosinusitis instead of proposed DC 6240 (Rhinitis, allergic or nonallergic (vasomotor)) if either chronic or recurrent acute form of rhinosinusitis is present. *See* Rosenfeld, *supra* at S1–31.

v. Diagnostic Code 6523

Currently, DC 6523 (bacterial rhinitis) addresses chronic residuals related to bacterial infection of the sinuses. VA proposes to redesignate DC 6523 as 6234 under § 4.87. Additionally, VA proposes to rename this DC, ''Rhinosinusitis, infection related,'' for clarity to ensure that readers understand that it includes rhinosinusitis caused by bacterial or fungal agents.

VA proposes that infection-related rhinosinusitis be evaluated under the proposed General Rating Formula for CRS and RARS to, again, reflect current medical understanding.

vi. Diagnostic Code 6524

Current DC 6524 (granulomatous rhinitis) provides for a 100 percent evaluation for Wegener's granulomatosis or lethal midline granuloma; VA assigns a 20 percent evaluation for other types of granulomatous infection. These evaluations are outdated for a number of reasons. Modern medical science has identified lethal midline granuloma (also referred to as lymphomatoid

granulomatosis or polymorphic reticulosis) as a peripheral T-cell lymphoma. Wegener's (now referred to as granulomatous disease with polyangiitis, or GPA), Churg-Strauss disease (now referred to as eosinophilic granulomatous disease with polyangiitis, or EGPA), and sarcoidosis are all autoimmune conditions that can affect the sinuses and nasal passages. They typically require systemic immunosuppressive treatment for extended periods (one to two years, or more) and may recur, requiring resumption of immunosuppressive treatment. As a result, VA proposes several revisions to incorporate current medical understanding of these conditions.

First, VA proposes to redesignate this code as DC 6235 under § 4.87. Second, VA proposes to rename this code ''Rhinosinusitis, autoimmune, granulomatous or other causes,'' to update terminology. Third, VA proposes to ensure consistent application by adding a note that directs rating personnel to evaluate lethal midline granuloma under proposed DC 6238, as such condition is best characterized as a malignant neoplasm. Fourth, VA proposes to transfer the 100 percent evaluation from the current DC 6524 to the new DC 6235, as well as modify its criteria by linking it to the current use of systemic immunosuppressive therapy. Fifth, VA proposes to direct personnel to use the proposed General Rating Formula for CRS and RARS for any evaluation less than 100 percent under proposed DC 6235. This instruction helps ensure appropriate, uniform ratings for any chronic residuals that do not rise to the level of malignancy.

7. Proposed New Diagnostic Codes

In addition to amending current DCs under § 4.87 and relocating those from § 4.97, VA proposes to add several new conditions to better evaluate veterans using a more complete ear, nose and throat schedule.

i. Diagnostic Code 6233

The first new DC VA proposes to add to § 4.87 is Rhinosinusitis, allergic and nonallergic (vasomotor) related (DC 6233). This DC enables rating personnel to capture CRS or RARS as a consequence of DC 6240 (Rhinitis, allergic or nonallergic (vasomotor)). DC 6240 will instruct rating personnel to select DC 6233 (rhinosinusitis, allergic or nonallergic (vasomotor) related) if either CRS or RARS is present.

ii. Diagnostic Code 6236

A new condition frequently present in veterans that VA proposes to add to § 4.87 is vocal cord paralysis (DC 6236). Its primary symptom is hoarseness, so VA proposes to direct rating personnel to evaluate this condition analogous to chronic laryngitis (DC 6228) or aphonia (DC 6230). *See* Seth R. Schwartz et al., ''Clinical practice guideline: Hoarseness (dysphonia),'' 141(Supp. 3) Otolaryngology-Head and Neck Surgery S1 (2009).

iii. Diagnostic Codes 6237 and 6238

Benign and malignant neoplasms of the nasopharynx occur with such sufficient frequency among veterans that VA proposes to add discrete codes (DCs 6237 and 6238, respectively) for these conditions. VA proposes to rate benign neoplasms according to impairment of function by utilizing the most appropriate evaluation criteria because the disability due to these neoplasms varies. The addition of DC 6237 does not represent a substantive change in the evaluation of benign neoplasms, but it allows for better tracking and data analysis of this condition by providing a specific DC.

VA proposes to evaluate malignant neoplasms similarly to other malignancies in the VASRD. Specifically, VA will assign an evaluation of 100 percent for six months beyond the cessation of any surgery, radiation treatment, antineoplastic chemotherapy, or other therapeutic procedures. Then, VA will determine the appropriate disability rating by ordering a mandatory VA examination. VA will apply the provisions of § 3.105(e) of this chapter to any change in evaluation based upon that or any subsequent examination. Rating personnel will evaluate residual impairment of function barring subsequent local recurrence or metastasis.

iv. Diagnostic Code 6239

VA proposes to add a new DC for diseases of the salivary glands, other than neoplasms (DC 6239). These conditions generally result in xerostomia (dry mouth), a condition that may lead to secondary effects of dental disease, nutritional deficit, pain, formation of salivary duct stones, and/or changes in taste. *See* James J. Sciubba and David Goldenberg., ''Oral complications of radiotherapy,'' 7 Lancet Oncology 175 (2006); S.B. Jensen et al., ''A systematic review of salivary gland hypofunction and xerostomia induced by cancer therapies: management strategies and economic impact,'' 18 Support Care Cancer 1061 (2010).

VA proposes to assign a 0 percent evaluation for xerostomia (dry mouth) not accompanied by secondary conditions such as difficulty in mastication of food or painless swelling of the salivary glands. VA would assign a 10 percent evaluation for xerostomia with altered sensation of taste and difficulty with lubrication and mastication of food but without associated weight loss or increase in dental caries. VA would also award a 10 percent evaluation if there was chronic inflammation of a salivary gland with pain and swelling on eating; or one or more salivary calculi, or gland stricture. Finally, VA proposes a maximum 20 percent evaluation for xerostomia with altered sensation of taste and difficulty with lubrication and mastication of food that results in either weight loss or an increase in dental caries. Diseases of the salivary glands may also result in neurological residuals and facial disfigurement due to swelling, so VA intends to include a note directing rating personnel to evaluate such residuals under the appropriate code(s).

Executive Orders 12866 and 13563

Executive Orders 12866 and 13563 direct agencies to assess the costs and benefits of available regulatory alternatives and, when regulation is necessary, to select regulatory approaches that maximize net benefits (including potential economic, environmental, public health and safety effects, and other advantages; distributive impacts; and equity). Executive Order 13563 (Improving Regulation and Regulatory Review) emphasizes the importance of quantifying both costs and benefits, reducing costs, harmonizing rules, and promoting flexibility. The Office of Information and Regulatory Affairs has determined that this rule is an economically significant regulatory action under Executive Order 12866. The Regulatory Impact Analysis associated with this rulemaking can be found as a supporting document at *www.regulations.gov.*

Regulatory Flexibility Act

The Secretary hereby certifies that this proposed rule will not have a significant economic impact on a substantial number of small entities as they are defined in the Regulatory Flexibility Act (5 U.S.C. 601–612). The certification is based on the fact that no small entities or businesses assign evaluations for disability claims. Therefore, pursuant to 5 U.S.C. 605(b), the initial and final regulatory flexibility

analysis requirements of 5 U.S.C. 603 and 604 do not apply.

Unfunded Mandates

The Unfunded Mandates Reform Act of 1995 requires, at 2 U.S.C. 1532, that agencies prepare an assessment of anticipated costs and benefits before issuing any rule that is likely to result in the expenditure by State, local, and tribal governments, in the aggregate, or by the private sector, of $100 million or more (adjusted annually for inflation) in any given year. This proposed rule would have no such effect on State, local, and tribal governments, or on the private sector.

Paperwork Reduction Act

Although this proposed rule contains provisions constituting a collection of information under the Paperwork Reduction Act of 1995 (44 U.S.C. 3501–3521), no new or proposed revised collections of information are associated with this proposed rule. Specifically, the information collection requirements associated with this proposed rule are related to the filing of disability benefits claims (VA Form 21–526EZ) as well as Disability Benefits Questionnaires (DBQs) (Groups 3 and 4) which enable claimants to gather the necessary information from his or her treating physician as to the current symptoms and severity of a disability. The information collection requirements are approved by OMB and have been assigned OMB control numbers 2900–0747, 2900–0778, and 2900–0781.

Assistance Listing

The Assistance Listing numbers and titles for this rule are 64.104, Pension for Non-Service-Connected Disability for Veterans; 64.109, Veterans Compensation for Service-Connected Disability; and 64.110, Veterans Dependency and Indemnity Compensation for Service-Connected Death.

List of Subjects

38 CFR Part 3

Claims, Disability benefits, Pensions, Veterans.

38 CFR Part 4

Disability benefits, Pensions, Veterans.

Signing Authority

Denis McDonough, Secretary of Veterans Affairs, approved this document on July 6, 2021, and authorized the undersigned to sign and submit the document to the Office of the Federal Register for publication electronically as an official document of the Department of Veterans Affairs.

Michael P. Shores,

Director, Office of Regulation Policy & Management, Office of the Secretary, Department of Veterans.

For the reasons set forth in the preamble, VA proposes to amend 38 CFR parts 3 and 4 as set forth below:

PART 3—ADJUDICATION

Subpart A—Pension, Compensation, and Dependency and Indemnity Compensation

■ 1. The authority citation for part 3, subpart A, continues to read as follows:

Authority: 38 U.S.C. 501(a), unless otherwise noted.

■ 2. Amend § 3.350 by revising paragraphs (e)(1)(iii), (e)(1)(iv), (f)(2)(v), and (f)(2)(vi) to read as follows:

§ 3.350 Special monthly compensation ratings.

* * * * *

(e) * * *

(1) * * *

(iii) Bilateral deafness rated at 60 percent or more disabling (and the hearing loss in either one or both ears is service connected) in combination with service-connected blindness with bilateral visual acuity 20/200 or less.

(iv) Service-connected total deafness in one ear or bilateral deafness rated at 40 percent or more disabling (and the hearing loss in either one of both ears is service-connected) in combination with service-connected blindness of both eyes having only light perception or less.

* * * * *

(f) * * *

(2) * * *

(v) Blindness in both eyes having only light perception or less, or rated under paragraph (f)(2)(iii) of this section, when accompanied by bilateral deafness (and the hearing loss in either one or both ears is service-connected) rated at 10 or 20 percent disabling, will afford entitlement to the next higher intermediate rate, or if the veteran is already entitled to an intermediate rate, to the next higher statutory rate under 38 U.S.C. 1114, but in no event higher than the rate for (o).

(Authority: Sec. 112, Pub. L. 98–223)

(vi) Blindness in both eyes rated under 38 U.S.C. 1114 (l), (m) or (n), or rated under paragraphs (f)(2)(i), (ii) or (iii) of this section, when accompanied by bilateral deafness rated at no less than 30 percent, and the hearing loss in one or both ears is service-connected, will afford entitlement to the next higher statutory rate under 38 U.S.C. 1114, or if the veteran is already entitled to an intermediate rate, to the next higher intermediate rate, but in no event higher than the rate for (o).

(Authority: 38 U.S.C. 1114(p))

■ 3. Amend § 3.383 by revising paragraph (a)(3) and the Cross References to read as follows:

§ 3.383 Special considerations for paired organs and extremities.

(a) * * *

(3) Hearing loss in one ear compensable to a degree of 10 percent or more as a result of service-connected disability and hearing loss as a result of nonservice-connected disability that meets the provisions of § 3.385 in the other ear.

* * * * *

Cross References:

§ 3.385 Disability due to hearing loss; § 4.85 Evaluation of hearing loss.

■ 4. Amend § 3.815 by revising paragraph (d)(6)(viii) to read as follows:

§ 3.815 Monetary allowance under 38 U.S.C. chapter 18 for an individual with disability from covered birth defects whose biological mother is or was a Vietnam veteran; identification of covered birth defects.

* * * * *

(d) * * *

(6) * * *

(viii) Post-infancy deafness/hearing loss (onset after the age of one year);

■ 5. Revise § 3.385 to read as follows:

§ 3.385 Disability due to hearing loss.

For the purposes of administering its laws, VA will consider hearing loss to be a disability when the pure-tone auditory air conduction threshold in any of the frequencies of 500, 1000, 2000, 3000, or 4000 Hertz is 40 decibels or greater; or when the pure-tone auditory air conduction thresholds for at least three of the frequencies of 500, 1,000, 2,000, 3,000, or 4,000 Hertz are 26 decibels or greater; or when word recognition scores using the Maryland CNC Test are less than 94 percent.

PART 4—SCHEDULE FOR RATING DISABILITIES

Subpart B—Disability Ratings

■ 6. The authority citation for part 4 continues to read as follows:

Authority: 38 U.S.C. 1155, unless otherwise noted.

■ 7. Revise the undesignated center heading before § 4.85 to read as follows:

Ear, Nose, Throat, and Auditory Disabilities

■ 8. Amend § 4.85 by:
■ a. Revising the section heading;
■ b. Revising paragraphs (a) through (g);
■ c. Revising tables VI, VIA, and VII;
■ d. Adding entry for diagnostic code 6100; and,
■ e. Adding authority citation.

The revisions and additions read as follows:

§ 4.85 Evaluation of hearing loss.

(a) An examination for hearing loss for VA purposes must be conducted by a state-licensed audiologist and must include a controlled word recognition test (Maryland CNC) and a pure-tone audiometry test. Examinations will be conducted without the use of hearing aids. Hearing levels are measured in decibels and expressed as dB HL.

(b) Table VI, ''Numeric Designation of Hearing Loss Based on Pure-Tone Air Conduction Threshold Average and Word Recognition,'' is used to determine a Roman numeral designation (I through XI) for hearing loss based on a combination of the percent of word recognition (horizontal rows) and the pure-tone air conduction threshold average (vertical columns). The Roman numeral designation is located at the point where the percentage of word recognition and pure-tone air conduction threshold average intersect.

(c) Table VIA, ''Special Numeric Designation of Hearing Loss Based Only on Pure-Tone Air Conduction Threshold Average,'' is used to determine a Roman numeral designation (I through XI) for hearing loss based only on the pure-tone air conduction threshold average. Table VIA will be used when the examiner certifies that use of the word recognition test is not appropriate because of language difficulties (*e.g.,* English non-fluency), cognitive difficulties, inconsistent word recognition scores, etc., or when indicated under the provisions of § 4.86.

(d) ''Pure-tone air conduction threshold average,'' as used in Tables VI and VIA, is the sum of the pure-tone air conduction thresholds at 1,000, 2,000, 3,000, and 4,000 Hertz, divided by four. This average is used in all cases (including those in § 4.86) to determine the Roman numeral designation for hearing loss from Table VI or VIA.

(e) Table VII, ''Percentage Evaluations for Hearing Loss,'' is used to determine the percentage evaluation by combining the Roman numeral designations for hearing loss of each ear. The horizontal rows represent the ear having the better hearing and the vertical columns the ear having the poorer hearing. The percentage evaluation is located at the point where the row and column intersect.

(f) If hearing loss is service-connected in only one ear, in order to determine the percentage evaluation from Table VII, the non-service-connected ear will be assigned a Roman Numeral designation for hearing loss of I, subject to the provisions of § 3.383 of this chapter.

(g) When evaluating any claim for hearing loss, refer to § 3.350 of this chapter to determine whether the veteran may be entitled to special monthly compensation due either to deafness, or to deafness in combination with other specified disabilities.

* * * * *

BILLING CODE 8320–01–P

TABLE VI

NUMERIC DESIGNATION OF HEARING LOSS BASED ON PURE-TONE AIR CONDUCTION THRESHOLD AVERAGE AND WORD RECOGNITION

Percent of word recognition	PURE-TONE AIR CONDUCTION THRESHOLD AVERAGE								
	0-41	**42-49**	**50-57**	**58-65**	**66-73**	**74-81**	**82-89**	**90-97**	**98+**
92-100	I	I	I	II	II	II	III	III	IV
84-90	II	II	II	III	III	III	IV	IV	IV
76-82	III	III	IV	IV	IV	V	V	V	V
68-74	IV	IV	V	V	VI	VI	VII	VII	VII
60-66	V	V	VI	VI	VII	VII	VIII	VIII	VIII
52-58	VI	VI	VII	VII	VIII	VIII	VIII	VIII	IX
44-50	VII	VII	VIII	VIII	VIII	IX	IX	IX	X
36-42	VIII	VIII	VIII	IX	IX	IX	X	X	X
0-34	IX	X	XI	XI	XI	XI	XI	XI	XI

TABLE VIA*

SPECIAL NUMERIC DESIGNATION OF HEARING LOSS BASED ONLY ON PURE-TONE AIR CONDUCTION THRESHOLD AVERAGE										
PURE-TONE AIR CONDUCTION THRESHOLD AVERAGE										
0-41	**42-48**	**49-55**	**56-62**	**63-69**	**70-76**	**77-83**	**84-90**	**91-97**	**98-104**	**105+**
I	II	III	IV	V	VI	VII	VIII	IX	X	XI

* This table is for use only as specified in §§ 4.85 and 4.86.

TABLE VII

PERCENTAGE EVALUATION FOR HEARING LOSS (DIAGNOSTIC CODE 6100)

Poorer Ear

Better Ear	XI	X	IX	VIII	VII	VI	V	IV	III	II	I
XI	100*										
X	90	80									
IX	80	70	60								
VIII	70	60	50	50							
VII	60	60	50	40	40						
VI	50	50	40	40	30	30					
V	40	40	40	30	30	20	20				
IV	30	30	30	20	20	20	10	10			
III	20	20	20	20	20	10	10	10	0		
II	10	10	10	10	10	10	10	0	0	0	
I	10	10	0	0	0	0	0	0	0	0	0

* Review for entitlement to special monthly compensation under § 3.350 of this chapter.

BILLING CODE 8320–01–C

	Rating
6100 Hearing Loss:	
If hearing loss is evaluated at 0 percent under Table VII and tinnitus is diagnosed as associated with underlying hearing loss	10
Otherwise, evaluate using the Tables above.	
Note (1): The 10 percent evaluation is only applicable to tinnitus diagnosed as associated with non-compensable service-connected hearing loss. Tinnitus diagnosed as associated with another service-connected disability (i.e., Meniere's disease, residuals of traumatic brain injury (TBI), cerebral arteriosclerosis, vascular neurocognitive disorder) must be evaluated as a part of that disability without a separate evaluation for tinnitus under diagnostic code 6100.	
Note (2): Tinnitus will only be compensated as part of an underlying service-connected condition.	

(Authority: 38 U.S.C. 1155)

■ 9. Revise § 4.86 to read as follows:

§ 4.86 Exceptional patterns of hearing loss.

(a) When the pure-tone air conduction threshold at each of the four specified frequencies (1000, 2000, 3000, and 4000 Hertz) is 55 dB HL or more, the rating activity will determine the Roman numeral designation for hearing loss from either Table VI or Table VIA, whichever results in the higher numeral. Each ear will be evaluated separately.

(b) When the pure-tone air conduction threshold is 30 dB HL or less at 1000 Hertz, and 70 dB HL or more at 2000 Hertz, the rating activity will determine the Roman numeral designation for hearing loss from either Table VI or Table VIA, whichever results in the higher numeral. That numeral will then be elevated to the next higher Roman numeral. Each ear will be evaluated separately.

(Authority: 38 U.S.C. 1155)

■ 10. Amend § 4.87 by:

■ a. Revising the section heading;

■ b. Removing the heading ''Diseases of the Ear'';

■ c. Revising entries for diagnostic codes 6200 through 6205;

■ d. Adding entries for diagnostic codes 6220 through 6240 in numerical order; and

■ e. Removing entry for diagnostic code 6260.

The revisions and additions read as follows:

§ 4.87 Schedule of ratings—ear, nose, and throat.

	Rating
* * * * * * *	
6200 Chronic suppurative otitis media, mastoiditis, or cholesteatoma (or any combination):	
During suppuration, or with aural polyps	10
Note: Evaluate hearing loss and complications such as labyrinthitis, facial nerve paralysis, or bone loss of skull, separately.	
6201 Chronic nonsuppurative otitis media with effusion (serious otitis media):	
Rate based on hearing loss.	
6202 Otosclerosis, stapedectomy, stapedotomy, residuals of:	
Rate based on hearing loss.	
6204 Peripheral vestibular disorders:	
Vestibular disorder in one or both ears with symptoms during the last six months of sufficient frequency and intensity to result in an inability to engage in work and/or self-care and an inability to perform routine activities of daily living without assistance of others, even with modification of activity or accommodation	100
Vestibular disorder with symptoms during the last six months that occur with sufficient frequency to require routine limitation in activities such as those related to work and/or self-care but that enable independent activity with effort and some modification and/or accommodation	30
Vestibular disorder with symptoms during the last six months that require brief and temporary modification of activity but do not prevent continuation of normal functions such as work and/or self-care	10
Note (1): Self-care activities for the purposes of this DC consist of bathing, dressing, eating, managing hygiene, handling basic transfers, and/or mobility; a qualified health care provider must determine that the individual has difficulties with these activities.	
Note (2): VA requires objective findings supporting the diagnosis of peripheral vestibular disorder before assigning a compensable evaluation under this code. VA will separately evaluate and combine hearing loss or suppuration.	
6205 Meniere's syndrome (endolymphatic hydrops):	
In all cases, with hearing loss, with or without tinnitus; and	
Either:	
Vertigo occurring five or more times a month; or	
With persistent disequilibrium and gait instability	100
Vertigo occurring one to four times a month	60
Vertigo less than once a month	30
Note (1): The Meniere's syndrome diagnosis must be made by a otolaryngologist or neurologist.	
Note (2): For evaluation purposes, calculate the average vertigo frequency using a six-month period.	
Note (3): Evaluate Meniere's syndrome either under these criteria or by separately evaluating vertigo (as a peripheral vestibular disorder) and hearing loss, whichever method results in a higher overall evaluation. However, do not combine an evaluation for hearing loss or vertigo with an evaluation under this diagnostic code.	
* * * * * * *	
6220 Septum, nasal, deviation of:	
Traumatic only,	
With 50 percent obstruction of the nasal passage on both sides or complete obstruction on one side	10
6221 Nose, loss of part of, or scars:	
Loss of half or more, unable to use prosthesis (as documented by a qualified medical provider)	30
Loss of less than half, unable to use prosthesis (as documented by a qualified medical provider)	20
Any loss of the nose for which a prosthesis is required or recommended by a qualified medical provider and is capable of use	10

	Rating
Loss or disfigurement for which a prosthesis is not required or recommended by a qualified medical provider	0
Note: Or evaluate as DC 7800 (scars, disfiguring, head, face, or neck).	
General Rating Formula for Chronic Rhinosinusitis (CRS) and Recurrent Acute Rhinosinusitis (RARS): DCs 6222–6226; 6233–6235	
12 or more weeks of treatment with antibiotics for CRS/RARS during the preceding 12-month period AND unresponsive to endoscopic or other surgery used to treat CRS/RARS	50
12 or more weeks of treatment with antibiotics for CRS/RARS during the preceding 12-month period	30
At least four weeks, but less than 12 weeks of treatment with antibiotics for CRS/RARS during the preceding 12-month period	10
Less than four weeks of treatment with antibiotics for CRS/RARS during the preceding 12-month period	0
Note (1): VA will only compensate chronic rhinosinusitis (CRS) and recurrent acute rhinosinusitis (RARS). CRS is defined as 12 weeks or more of at least two of the following—(a) mucopurulent drainage (anterior, posterior, or both); (b) nasal obstruction (congestion); (c) facial pain-pressure-fullness; or (d) decreased sense of smell—in combination with inflammation as documented by either (a) purulent mucus (not clear) in the middle meatus or ethmoid region; (b) polyps in the nasal cavity or the middle meatus; or (c) radiographic imaging showing inflammation of the paranasal sinuses. RARS is defined as four or more episodes of acute bacterial rhinosinusitis (ABRS) without signs or symptoms of rhinosinusitis (inflammation of the paranasal sinuses and nasal cavity) between episodes.	
Note (2): VA will not compensate the following conditions: (a) Acute rhinosinusitis (ARS), which is defined as up to four weeks of purulent drainage (anterior, posterior, or both) accompanied by nasal obstruction, facial fullness, or both; (b) Viral rhinosinusitis (VRS), which is defined as rhinosinusitis caused by a virus and typically lasting less than 10 days); (c) ABRS, which is defined as a bacterial infection which causes symptoms of rhinosinusitis for at least 10 days after the onset of an upper respiratory infection, or causes recurrence of symptoms within seven days after initial improvement); and (d): Subacute rhinosinusitis (SAR), which is defined as rhinosinusitis symptoms lasting at least four but less than 12 weeks.	
6222 Rhinosinusitis, pansinusitis.	
6223 Rhinosinusitis, ethmoid.	
6224 Rhinosinusitis, frontal.	
6225 Rhinosinusitis, maxillary.	
6226 Rhinosinusitis, sphenoid.	
6227 Laryngitis, tuberculous, active or inactive. Rate under §§ 4.88c or 4.89, whichever is appropriate.	
6228 Laryngitis, chronic:	
Hoarseness, with thickening or nodules of cords, polyps, submucous infiltration, or pre-malignant changes on biopsy	30
Hoarseness, with inflammation of cords or mucous membranes	10
6229 Laryngectomy, total	[1]100
Rate the residuals of partial laryngectomy as laryngitis (DC 6228), aphonia (DC 6230), or stenosis of larynx (DC 6231).	
6230 Aphonia, complete organic:	
Constant inability to communicate by speech	[1] 100
Constant inability to speak above a whisper	60
Note: Evaluate incomplete aphonia as laryngitis, chronic (DC 6228).	
6231 Larynx, stenosis of, including residuals of laryngeal trauma (unilateral or bilateral):	
Total obstruction of larynx, requiring permanent tracheostomy	100
Partial obstruction of larynx with 50 percent or more narrowing of airways	70
Partial obstruction of larynx with 25 percent to less than 50 percent narrowing of airways	50
Partial obstruction of larynx with less than 25 percent narrowing of airways	30
Note: Or, evaluate as aphonia (DC 6230).	
6232 Pharynx, injuries to:	
Stricture or obstruction of pharynx or nasopharynx; absence of soft palate secondary to trauma, chemical burn, or granulomatous disease; or paralysis of soft palate with swallowing difficulty (nasal regurgitation) and speech impairment	50
6233 Rhinosinusitis, allergic or nonallergic (vasomotor) related.	
6234 Rhinosinusitis, infection related.	
6235 Rhinosinusitis, autoimmune, granulomatous or other causes:	
While receiving systemic immunosuppressive treatment, or for a period of six months after cessation of treatment	100
Otherwise evaluate using the General Rating Formula for CRS and RARS.	
Note: Evaluate lethal midline granuloma (also referred to as lymphomatoid granulomatosis or polymorphic reticulosis) under neoplasm, malignant (DC 6238).	
6236 Vocal cord paralysis:	
Evaluate under laryngitis, chronic (DC 6228) or aphonia, complete organic (DC 6230).	
6237 Neoplasm, nasopharyngeal, and/or sinus, benign:	100
Rate on impairment of function.	
6238 Neoplasm, nasopharyngeal, and/or sinus, malignant	100
Note: A rating of 100 percent shall continue beyond the cessation of any surgery, radiation treatment, antineoplastic chemotherapy, or other prescribed therapeutic procedures. Six months after discontinuance of such treatment, the appropriate disability rating shall be determined by mandatory VA examination. Any change in evaluation based upon that or any subsequent examination shall be subject to the provisions of § 3.105(e) of this chapter. If there has been no local recurrence or metastasis, evaluate on residual impairment of function.	
6239 Disease of the salivary glands and/or associated ducts, other than neoplasm:	
Xerostomia (dry mouth) with altered sensation of taste and difficulty with lubrication and mastication of food resulting in either weight loss (as defined in § 4.112 of this chapter) or an increase in dental caries	20
Xerostomia (dry mouth) with altered sensation of taste and difficulty with lubrication and mastication of food without weight loss or an increase in dental caries; chronic inflammation of salivary gland with pain and swelling on eating; or one or more salivary calculi or salivary gland stricture	10
Xerostomia (dry mouth) without difficulty in mastication of food or painless swelling of salivary gland	0
Note: Evaluate facial nerve (cranial nerve VII) impairment under diagnostic code 8207 (paralysis of seventh (facial) cranial nerve), and any disfigurement due to facial swelling under diagnostic code 7800 (disfigurement or scars of the head, face, or neck).	
6240 Rhinitis, allergic or nonallergic (vasomotor):	

	Rating
With documented evidence of polyps	30
Requires continuous therapy (*e.g.*, inhaled corticosteroids, oral or inhaled antihistamines)	10
Note: If complicated by either chronic or recurrent acute rhinosinusitis, evaluate instead under rhinosinusitis, allergic or non-allergic (vasomotor) related (DC 6233).	

[1] Review for entitlement to special monthly compensation under § 3.350 of this chapter.

(Authority: 38 U.S.C. 1155)

■ 11. Amend § 4.96 by:
■ a. Revising paragraph (a);
■ b. Removing paragraph (c);
■ c. Redesignating paragraph (d) as paragraph (c);
■ d. Revising newly redesignated paragraph (c); and
■ e. Adding new paragraph (d).

The revisions and additions read as follows:

§ 4.96 Special provisions regarding evaluation of respiratory conditions.

(a) *Rating coexisting respiratory conditions.* Unless otherwise directed in § 4.97, do not combine ratings under that section. Assign a single rating under the diagnostic code that reflects the predominant disability, elevating it to the next higher evaluation when warranted by the severity of the overall disability picture. When permitted, combine coexisting conditions in accordance with § 4.25.

* * * * *

(c) *Special provisions regarding Diagnostic Codes 6600 through 6604, 6731, 6820, 6825 through 6833, 6840 through 6846, and 6848.* (1) Pulmonary Function Tests (PFTs) are required to evaluate these conditions except when one of the following circumstances exists:

(i) When the results of a maximum exercise capacity test are of record and are 20 milliliters per kilogram per minute (ml/kg/min) or less. If a maximum exercise capacity test is not of record, evaluate based on alternative criteria.

(ii) When there have been one or more episodes of acute respiratory failure.

(iii) When outpatient oxygen therapy is required.

(2) When the PFTs are not consistent with clinical findings, evaluate based on the PFTs unless the examiner states why they are not a valid indication of respiratory functional impairment in a particular case.

(3) When there is a disparity between the results of different PFTs (FEV–1 (Forced Expiratory Volume in one second), FVC (Forced Vital Capacity), etc.), so that the level of evaluation would differ depending on which test result is used, use the test result that the examiner states most accurately reflects the level of disability.

(d) *Respiratory conditions and comorbid cardiovascular conditions.* Absent instructions otherwise in individual diagnostic codes, if there are comorbid respiratory and cardiovascular conditions that can be evaluated by METs, only the disability from one body system may be evaluated using METs, while the disability involving the other body system must be evaluated by criteria other than METs.

■ 12. In § 4.97 amend the table by:
■ a. Removing the heading ''DISEASES OF THE NOSE AND THROAT'';
■ b. Removing entries for diagnostic codes 6502 through 6524;
■ c. Adding introductory text;
■ d. Adding entry for ''General Rating Formula for Respiratory Conditions'';
■ e. Removing the heading ''DISEASE OF THE TRACHEA AND BRONCHI'' and adding in its place ''INTRINSIC LUNG DISEASES'';
■ f. Adding the subheading ''Airway Disorders (Trachea, Bronchi)'' under ''INTRINSIC LUNG DISEASES'';
■ g. Revising entries for diagnostic codes 6600 through 6604;
■ h. Removing the heading ''DISEASES OF THE LUNGS AND PLEURA—TUBERCULOSIS'' and adding in its place ''Tuberculous Lung Diseases'';
■ i. Revising entries for diagnostic codes 6704, 6724, 6730, and 6731;
■ j. Removing the heading ''NONTUBERCULOUS DISEASES'' and adding in its place ''Vascular Lung Diseases'';
■ k. Revising entry for diagnostic code 6817;
■ l. Adding entry for diagnostic code 6849 under diagnostic code 6817;
■ m. Adding the subheading ''Lung Neoplasms'' above diagnostic code 6819;
■ n. Revising entries for diagnostic codes 6819 and 6820;
■ o. Removing the subheading ''Bacterial Infections of the Lung'' and adding in its place ''Bacterial Lung Diseases'';
■ p. Adding entry for ''General Rating Formula for Bacterial Lung Diseases'' above diagnostic code 6822;
■ q. Republishing entry for diagnostic code 6822;
■ r. Removing the subheading ''Interstitial Lung Disease'' and adding in its place ''Parenchymal Lung Disease (Including Interstitium and Alveolar Spaces)'';
■ s. Adding note above diagnostic code 6825;
■ t. Revising entry for diagnostic code 6825;
■ u. Republishing entry for diagnostic code 6833;
■ v. Adding entry for diagnostic code 6846 under diagnostic code 6833;
■ w. Removing entry for ''General Rating Formula for Interstitial Lung Disease (diagnostic codes 6825 through 6833)'';
■ x. Removing the subheading ''Mycotic Lung Disease'' and adding in its place ''Mycotic Lung Diseases'';
■ y. Adding entry for ''General Rating Formula for Mycotic Lung Disease'' above diagnostic code 6834;
■ z. Republishing entry for diagnostic code 6834;
■ aa. Removing entry for ''General Rating Formula for Mycotic Lung Disease (diagnostic codes 6834 through 6839)'';
■ bb. Removing the subheading ''Restrictive Lung Disease'' and adding in its place ''OTHER RESPIRATORY CONDITIONS'';
■ cc. Revising entries for diagnostic codes 6841 and 6842;
■ dd. Removing entry for ''General Rating Formula for Lung Diseases (diagnostic codes 6840 through 6845)'';
■ ee. Removing entry for diagnostic code 6846 under diagnostic code 6845;
■ ff. Revising entry for diagnostic code 6847; and
■ gg. Adding entry for diagnostic code 6848.

The revisions and additions read as follows:

§ 4.97 Schedule of Ratings—Respiratory System.

	Rating
Unless otherwise directed, evaluate diseases of the Respiratory System under the General Rating Formula for Respiratory Conditions.	
General Rating Formula for Respiratory Conditions:	
At least one of the following	100
Forced Vital Capacity (FVC) less than 50 percent of predicted value; or	
Forced Expiratory Volume in one second (FEV–1) less than 45 percent of predicted value; or	
Diffusion Capacity of the Lung for Carbon Monoxide by the Single Breath Method (DLCO(SB)) less than 40 percent predicted; or	
The ratio of FEV–1 to FVC (FEV–1/FVC) less than 40 percent; or	
Maximum Oxygen Consumption measured in milliliters per kilogram per minute (mL/Kg/min) (VO2 Max) less than 10.5; or	
Workload of 3 Metabolic Equivalents (METs) or less.	
At least one of the following	60
FVC of 50 to 64 percent predicted; or	
FEV–1 of 45 to 55 percent predicted; or	
DLCO(SB) of 40 to 55 percent predicted; or	
FEV–1/FVC of 40 to 55 percent; or	
VO2 Max of 10.5 to 17.5; or	
Workload of 3.1–5.0 METs.	
At least one of the following	30
FVC of 65 to 74 percent predicted; or	
FEV–1 of 56 to 70 percent predicted; or	
DLCO(SB) of 56 to 65 percent predicted; or	
FEV–1/FVC of 56 to 70 percent; or	
VO2 Max of 17.6 to 24.5; or	
Workload of 5.1–7.0 METs.	
At least one of the following	10
FVC of 75 to 80 percent predicted; or	
FEV–1 of 71 to 80 percent predicted; or	
DLCO(SB) of 66 to 80 percent predicted; or	
FEV–1/FVC of 71 to 80 percent.	
Note (1): Base the rating on the criteria that reflects the greatest impairment and, therefore, the greatest disability percentage, unless otherwise directed by the examiner (see § 4.96(c)(3)).	
Note (2): Do not combine a rating assigned from this formula with other ratings under § 4.97, except for sleep apnea syndromes (DC 6847).	
Note (3): Per § 4.96(d), when METs are used to evaluate a respiratory disability under § 4.97, do not use METs to evaluate a comorbid cardiovascular disability under § 4.104, and vice versa.	
INTRINSIC LUNG DISEASES	
Airway Disorders (Trachea, Bronchi)	
6600 Bronchitis, chronic.	
6601 Bronchiectasis.	
6602 Asthma, bronchial:	
At least one of the following	100
FEV–1 less than 45 percent predicted; or	
FEV–1/FVC less than 40 percent; or	
More than one attack per week with episodes of respiratory failure; or	
Requires daily use of systemic (oral or parenteral) high-dose corticosteroids or immuno-suppressive medications.	
At least one of the following	60
FEV–1 of 45 to 55 percent predicted; or	
FEV–1/FVC of 40 to 55 percent; or	
At least monthly visits to a physician for required care of exacerbations; or	
Intermittent (at least three per year) courses of systemic (oral or parenteral) corticosteroids.	
At least one of the following	30
FEV–1 of 56 to 70 percent predicted; or	
FEV–1/FVC of 56 to 70 percent; or	
Daily inhalational or oral bronchodilator therapy or inhalational anti-inflammatory medication.	
At least one of the following	10
FEV–1 of 71 to 80 percent predicted; or	
FEV–1/FVC of 71 to 80 percent; or	
less than daily inhalational or oral bronchodilator therapy.	
Note (1): In the absence of clinical findings of asthma at the time of examination, a verified history of asthmatic attacks must be of record.	
Note (2): Do not combine a rating assigned under this diagnostic code with other ratings under § 4.97, except for sleep apnea syndromes (DC 6847).	
6603 Emphysema, pulmonary.	
6604 Chronic obstructive pulmonary disease.	
Tuberculous Lung Diseases	
Ratings for Pulmonary Tuberculosis Entitled on August 19, 1968	

	Rating
* * * * * * *	
6704 Tuberculosis, pulmonary, chronic, active, advancement unspecified	100
General Rating Formula for Inactive Pulmonary Tuberculosis:	
For two years after date of inactivity, following active tuberculosis, which was clinically identified during service or subsequently	100
Thereafter for four years, or in any event, to six years after date of inactivity	50
Thereafter, for 5 years, or to 11 years after date of inactivity	30
Following far advanced lesions diagnosed at any time while the disease process was active, minimum	30
Following moderately advanced lesions, provided there is continued disability, emphysema, dyspnea on exertion, impairment of health, etc	20
Otherwise	0
Note (1): The 100 percent rating under codes 6701 through 6724 is not subject to a requirement of precedent hospital treatment. It will be reduced to 50 percent for failure to submit to examination or to follow prescribed treatment upon report to that effect from the medical authorities. When a veteran is placed on the 100 percent rating for inactive tuberculosis, the medical authorities will be appropriately notified of the fact, and of the necessity to notify the Veterans Service Center in the event of failure to submit to examination or to follow treatment.	
Note (2): The graduated 50 percent and 30 percent ratings and the permanent 30 percent and 20 percent ratings for inactive pulmonary tuberculosis are not to be combined with ratings for other respiratory disabilities. Following thoracoplasty, the rating will be for removal of ribs combined with the rating for collapsed lung. Resection of the ribs incident to thoracoplasty will be evaluated as removal.	
* * * * * * *	
6724 Tuberculosis, pulmonary, chronic, inactive, advancement unspecified.	
* * * * * * *	
6730 Tuberculosis, pulmonary, chronic, active	100
Note: Active pulmonary tuberculosis will be considered permanently and totally disabling for non-service-connected pension purposes in the following circumstances:	
(a) Associated with active tuberculosis involving other than the respiratory system.	
(b) With severe associated symptoms or with extensive cavity formation.	
(c) Reactivated cases, generally.	
(d) With advancement of lesions on successive examinations or while under treatment.	
(e) Without retrogression of lesions or other evidence of material improvement at the end of 6 months hospitalization or without change of diagnosis from ''active'' at the end of 12 months hospitalization. Material improvement means lessening or absence of clinical symptoms, and X-ray findings of a stationary or retrogressive lesion.	
6731 Tuberculosis, primary, chronic, inactive:	
Depending on the specific findings, evaluate respiratory residuals using General Rating Formula for Respiratory Conditions.	
Note (1): Evaluate thoracoplasty as removal of ribs under DC 5297.	
Note (2): Request a mandatory examination immediately following notification that active tuberculosis evaluated under DC 6730 has become inactive. Implement any change in evaluation under the provisions of § 3.105(e).	
* * * * * * *	
Vascular Lung Diseases	
6817 Pulmonary thromboembolic disease:	
Chronic pulmonary thromboembolism with evidence of either pulmonary hypertension or right ventricular hypertrophy	100
At least one of the following	60
Chronic pulmonary thromboembolism requiring anticoagulant therapy; or	
Following inferior vena cava surgery without evidence of pulmonary hypertension or right ventricular dysfunction.	
Symptomatic, following resolution of acute pulmonary embolism	30
Asymptomatic, following resolution of pulmonary thromboembolism	0
Note (1): Evaluate other residuals following pulmonary embolism under the most appropriate diagnostic code, such as chronic bronchitis (DC 6600) or chronic pleural effusion or fibrosis (DC 6844), but do not combine that evaluation with any of the above evaluations.	
Note (2): Do not assign separate evaluations for pulmonary thromboembolic disease with right ventricular hypertrophy and a comorbid cardiovascular condition listed under § 4.104, diagnostic codes (DCs) 7000–7020. Assign a single rating under this diagnostic code or under DCs 7000–7020, whichever reflects the predominant disability.	
Note (3): Do not combine a rating assigned under this diagnostic code with other ratings under § 4.97, except for sleep apnea syndromes (DC 6847).	
6849 Pulmonary hypertension:	
Echocardiogram with severe right ventricular (RV) enlargement (greater than 4 cm), and at least one of the following:	
Maximum Oxygen Consumption measured in milliliters per kilogram per minute (mL/Kg/min) (VO2 Max) less than 15; or	
Workload of 3 Metabolic Equivalents (METs) or less	100
Echocardiogram with severe RV enlargement (greater than 4 cm), and at least one of the following:	
Brain natriuretic peptide (BNP) greater than 500;	
VO2 Max of 15 to 20; or	
Workload of 3.1 to 5.0 METs	60
Echocardiogram with moderate RV enlargement (3 to 4 cm), and at least one of the following:	
BNP of 100 to 500; or	
Workload of 5.1 to 7.0 METs	30
One of the following:	
BNP less than 100; or	
VO2 Max greater than 20	0

	Rating
Note (1): Acute pulmonary hypertension is not a disability for rating purposes.	
Note (2): Do not assign separate evaluations for pulmonary hypertension and a comorbid cardiovascular condition listed under § 4.104, diagnostic codes (DCs) 7000–7020. Assign a single rating under this diagnostic code or under DCs 7000–7020, whichever reflects the predominant disability.	
Note (3): Do not combine a rating assigned under this diagnostic code with other ratings under § 4.97, except for sleep apnea syndromes (DC 6847).	
Lung Neoplasms	
6819 Neoplasms, malignant, any specified part of respiratory system exclusive of skin growths	100
Note: A rating of 100 percent shall continue beyond the cessation of any surgical, X-ray, antineoplastic chemotherapy, or other prescribed therapeutic procedure. Six months after discontinuance of such treatment, the appropriate disability rating shall be determined by mandatory VA examination. Any change in evaluation based upon that or any subsequent examination shall be subject to the provisions of § 3.105(e) of this chapter. If there has been no local recurrence or metastasis, evaluate on residuals by using the General Rating Formula for Respiratory Conditions.	
6820 Neoplasms, benign, any specified part of respiratory system.	
Bacterial Lung Diseases	
General Rating Formula for Bacterial Lung Diseases:	
Active infection with systemic symptoms such as fever, night sweats, weight loss, or hemoptysis	100
Depending on the specific findings, evaluate the most severe residual analogously.	
Note: Do not combine a rating assigned under this formula with other ratings under § 4.97, except for sleep apnea syndromes (DC 6847).	
6822 Actinomycosis.	
* * * * * * *	
Parenchymal Lung Disease (Including Interstitium and Alveolar Spaces)	
Note (1): Evaluate using the General Rating Formula for Respiratory Conditions.	
Note (2): For DCs 6825 through 6833 and DC 6846, add 10 percent to any rating if a physician prescribes either of the following: Oral prednisone greater than 20mg daily or daily second-line (*i.e.*, non-steroidal) immunosuppressive medication.	
6825 Diffuse interstitial fibrosis (interstitial pneumonitis, fibrosing alveolitis, or idiopathic fibrosis).	
* * * * * * *	
6833 Asbestosis.	
6846 Sarcoidosis.	
Mycotic Lung Diseases	
General Rating Formula for Mycotic Lung Diseases:	
Chronic pulmonary mycosis with persistent fever, weight loss, night sweats, or massive hemoptysis	100
Chronic pulmonary mycosis requiring suppressive therapy with no more than minimal symptoms such as occasional minor hemoptysis or productive cough	50
Chronic pulmonary mycosis with minimal symptoms such as occasional minor hemoptysis or productive cough	30
Healed and inactive mycotic lesions, asymptomatic	0
Note (1): Coccidioidomycosis has an incubation period up to 21 days, and the disseminated phase is ordinarily manifest within 6 months of the primary phase. However, there are instances of dissemination delayed for years after the initial infection, which may have been unrecognized. Accordingly, when considering service connection, in the absence of record or other evidence of the disease in service, service in southwestern United States, where the disease is endemic, and absence of prolonged residence in this locality before or after service will be the deciding factor.	
Note (2): Do not combine a rating assigned under this formula with other ratings under § 4.97, except for sleep apnea syndromes (DC 6847).	
6834 Histoplasmosis of lung.	
OTHER RESPIRATORY CONDITIONS	
* * * * * * *	
6841 Respiratory insufficiency due to spinal cord injury.	
6842 Pulmonary disease secondary to kyphoscoliosis, pectus excavatum, or pectus carinatum.	
* * * * * * *	
6847 Sleep apnea syndromes (obstructive, central, or mixed):	
Treatment ineffective (as determined by sleep study) or unable to use treatment due to comorbid conditions; and with end-organ damage	100
Treatment ineffective (as determined by sleep study) or unable to use treatment due to comorbid conditions; and without end-organ damage	50
Incomplete relief (as determined by sleep study) with treatment	10
Asymptomatic with or without treatment	0
Note: Qualifying comorbidities are conditions that, in the opinion of a qualified medical provider, directly impede or prevent the habitual use of a recognized form of treatment shown by sleep study to be effective in the affected veteran's case (*e.g.*, contact dermatitis where the mask or interface touches the face or nares, Parkinson's disease, missing limbs, facial disfigurement, or skull fracture).	

	Rating
6848 Lung transplantation:	
Following transplant surgery	100
Thereafter, evaluate residuals under the General Rating Formula for Respiratory Conditions, minimum rating	30
Note (1): A rating of 100 percent shall be assigned as of the date of hospital admission for lung transplant. One year following discharge, the appropriate disability rating shall be determined by mandatory VA examination. Any change in evaluation based upon that or any subsequent examination shall be subject to the provisions of § 3.105(e) of this chapter.	
Note (2): Do not combine a rating assigned under this diagnostic code with other ratings under § 4.97, except for sleep apnea syndromes (DC 6847).	

■ 13. Amend § 4.104 by:
■ a. Removing Note (1);
■ b. Redesignating Note (2) as Note (1); and
■ c. Redesignating Note (3) as Note (2).

The revisions read as follows:

§ 4.104 Schedule of ratings—cardiovascular system.

* * * * *

	Rating
Note (1): One MET (metabolic equivalent) is the energy cost of standing quietly at rest and represents an oxygen uptake of 3.5 milliliters per kilogram of body weight per minute. When the level of METs at which breathlessness, fatigue, angina, dizziness, or syncope develops is required for evaluation, and a laboratory determination of METs by exercise testing cannot be done for medical reasons, a medical examiner may estimate the level of activity (expressed in METs and supported by specific examples, such as slow stair climbing or shoveling snow) that results in those symptoms.	
Note (2): For this general formula, heart failure symptoms include, but are not limited to, breathlessness, fatigue, angina, dizziness, arrhythmia, palpitations, or syncope.	

* * * * * * *

■ 14. Amend appendix A to part 4 by:
■ a. Adding entry for § 4.85;
■ b. Revising entries for §§ 4.87 and 4.87a;
■ c. Revising entries for diagnostic codes 6502 through 6516, 6518 through 6604, 6731, and 6817, 6819, 6820, and 6822 through 6847; and
■ d. Adding entries for diagnostic codes 6848 and 6849 in numerical order.

The revisions and additions read as follows:

APPENDIX A TO PART 4—TABLE OF AMENDMENTS AND EFFECTIVE DATES SINCE 1946

Sec.	Diagnostic code No.	
*	*	* * * * * *
4.85	6100	Criterion [*effective date of final rule*].
4.87		Tables VI and VII replaced by new Tables VI, VIA, and VII December 18, 1987.
	6200	Revised and redesignated § 4.87 June 10, 1999; criterion [*effective date of final rule*].
	6201	Revised and redesignated § 4.87 June 10, 1999; criterion [*effective date of final rule*].
	6202	Revised and redesignated § 4.87 June 10, 1999; title [*effective date of final rule*].
	6204	Revised and redesignated § 4.87 June 10, 1999; criterion [*effective date of final rule*].
	6205	Revised and redesignated § 4.87 June 10, 1999; criterion [*effective date of final rule*].
	6207–6211	Revised and redesignated § 4.87 June 10, 1999.
	6220–6240	Added [*effective date of final rule*].
	6260	Revised and redesignated § 4.87 June 10, 1999; Removed [*effective date of final rule*].
4.87a	6275–6276	Moved from § 4.87b June 10, 1999.
*	*	* * * * * *
4.97	6502–6514	Criterion October 7, 1996; Revised and moved to § 4.87 [*effective date of final rule*].
	6515	Criterion March 11, 1969; Revised and moved to § 4.87 [*effective date of final rule*].
	6516	Criterion October 7, 1996; Revised and moved to § 4.87 [*effective date of final rule*].
	6517	*Removed October 7, 1996.*
	6518–6520	Criterion October 7, 1996; Revised and moved to § 4.87 [*effective date of final rule*].
	6521–6524	Added October 7, 1996; Revised and moved to § 4.87 [*effective date of final rule*].
	6600	Evaluation September 9, 1975; criterion October 7, 1996; criterion [*effective date of final rule*].
	6601	Criterion October 7, 1996; criterion [*effective date of final rule*].
	6602	Criterion September 9, 1975; criterion October 7, 1996; criterion [*effective date of final rule*].
	6603	Added September 9, 1975; criterion October 7, 1996; criterion [*effective date of final rule*].
	6604	Added October 7, 1996; criterion [*effective date of final rule*].
*	*	* * * * * *
	6731	Evaluation September 22, 1978; criterion October 7, 1996; criterion [*effective date of final rule*].
*	*	* * * * * *
	6817	Evaluation October 7, 1996; title, criterion [*effective date of final rule*].

APPENDIX A TO PART 4–TABLE OF AMENDMENTS AND EFFECTIVE DATES SINCE 1946—Continued

Sec.	Diagnostic code No.	
*	*	* * * * * *
	6819	Criterion March 10, 1976; criterion October 7, 1996; criterion [*effective date of final rule*].
	6820	Criterion [*effective date of final rule*].
	6821	August 23, 1948; Removed October 7, 1996.
	6822–6824	Added October 7, 1996; criterion [*effective date of final rule*].
	6825	Added October 7, 1996; title, criterion [*effective date of final rule*].
	6826–6840	Added October 7, 1996; criterion [*effective date of final rule*].
	6841–6842	Added October 7, 1996; title, criterion [*effective date of final rule*].
	6843–6847	Added October 7, 1996; criterion [*effective date of final rule*].
	6848	Added [*effective date of final rule*].
	6849	Added [effective date of final rule].
*	*	* * * * * *

■ 15. Amend appendix B to part 4 by:

■ a. Removing the heading ''THE EAR'' and adding in its place ''EAR, NOSE, and THROAT'';

■ b. Adding entry for diagnostic code 6100;

■ c. Revising diagnostic code 6202;

■ d. Adding diagnostic codes 6220 through 6240;

■ e. Removing diagnostic code 6260;

■ f. Removing the subheading ''Nose and Throat'';

■ g. Removing diagnostic codes 6502 through 6524;

■ h. Removing the subheading ''Trachea and Bronchi'' and adding in its place ''Airway Disorders (Trachea, Bronchi)'';

■ i. Removing the subheading ''Lungs and Pleura Tuberculosis'' and adding in its place ''Tuberculosis Lung Disease'';

■ j. Removing the subheading ''Nontuberculous Diseases'' and adding in its place ''Vascular Lung Disease'';

■ k. Revising diagnostic code 6817;

■ l. Adding entry for diagnostic code 6849 under diagnostic code 6817;

■ m. Adding the subheading ''Lung Neoplasms'' above diagnostic code 6819;

■ n. Republishing diagnostic code 6819;

■ o. Removing the subheading ''Bacterial Infections of the Lung'' and adding in its place ''Bacterial Lung Diseases'';

■ p. Removing the subheading ''Interstitial Lung Disease'' and adding in its place ''Parenchymal Lung Disease (Including Interstitium and Alveolar Spaces)'';

■ q. Revising diagnostic codes 6825, 6829, and 6830;

■ r. Removing the subheading ''Mycotic Lung Disease'' and adding in its place ''Mycotic Lung Diseases'';

■ s. Removing the subheading ''Restrictive Lung Disease'' and adding in its place ''Other Respiratory Conditions'';

■ t. Revising diagnostic codes 6841 and 6842; and

■ u. Adding diagnostic code 6848.

The revisions and additions read as follows:

APPENDIX B TO PART 4—NUMERICAL INDEX OF DISABILITIES

Diagnostic code No.	
*	* * * * * *
	EAR, NOSE, and THROAT
6100	Hearing loss.
*	* * * * * *
6202	Otosclerosis, stapedectomy, stapedotomy, residuals of.
*	* * * * * *
6220	Septum, nasal, deviation of.
6221	Nose, loss of part of, or scars.
6222	Rhinosinusitis, pansinusitis, chronic; infectious.
6223	Rhinosinusitis, ethmoid, chronic; infectious.
6224	Rhinosinusitis, frontal, chronic; infectious.
6225	Rhinosinusitis, maxillary, chronic; infectious.
6226	Rhinosinusitis, sphenoid, chronic; infectious.
6227	Laryngitis, tuberculous, active or inactive.
6228	Laryngitis, chronic.
6229	Laryngectomy, total.
6230	Aphonia, complete organic.
6231	Larynx, stenosis of, including residuals of laryngeal trauma (unilateral or bilateral).
6232	Pharynx, injuries to.
6233	Rhinosinusitis, allergic or nonallergic (vasomotor) related.
6234	Rhinosinusitis, infection related.
6235	Rhinosinusitis, autoimmune, granulomatous, or other causes.
6236	Vocal cord paralysis.

APPENDIX B TO PART 4—NUMERICAL INDEX OF DISABILITIES—Continued

Diagnostic code No.	
6237	Neoplasm, nasopharyngeal and/or sinus, benign.
6238	Neoplasm, nasopharyngeal, and/or sinus, malignant.
6239	Salivary gland and/or associated ducts disease other than neoplasm.
6240	Rhinitis, allergic or nonallergic (vasomotor).
*	* * * * * *
	THE RESPIRATORY SYSTEM
	Airway Disorders (Trachea, Bronchi)
*	* * * * * *
	Tuberculous Lung Diseases
*	* * * * * *
	Vascular Lung Diseases
6817	Pulmonary thromboembolic disease.
6849	Pulmonary hypertension.
	Lung Neoplasms
6819	Neoplasms, malignant.
*	* * * * * *
	Bacterial Lung Diseases
*	* * * * * *
	Parenchymal Lung Disease (Including Interstitium and Alveolar Spaces)
6825	Diffuse interstitial fibrosis.
*	* * * * * *
6829	Drug-induced pulmonary pneumonitis and fibrosis.
6830	Radiation-induced pulmonary pneumonitis and fibrosis.
*	* * * * * *
	Mycotic Lung Diseases
*	* * * * * *
	Other Respiratory Conditions
*	* * * * * *
6841	Respiratory insufficiency due to spinal cord injury.
6842	Pulmonary disease secondary to kyphoscoliosis, pectus excavatum, pectus carinatum.
*	* * * * * *
6848	Lung transplantation.
*	* * * * * *

■ 16. Amend appendix C to part 4 by:

■ a. Revising entries for ''Aphonia, organic'' and ''Injury: Pharynx'';

■ b. Removing entry for ''Injury: Sacroiliac: Spinal cord'' and ''Kyphoscoliosis, pectus excavatum/carinatum'';

■ c. Adding entry for ''Hearing loss'';

■ d. Revising entries for ''Laryngectomy'', ''Laryngitis:'', ''Larynx, stenosis of'', and ''Loss of: Nose, part of, or scars'';

■ e. Adding entries for ''Lung, transplantation of'', ''Neoplasms: Benign: Nasopharyngeal'', and ''Neoplasms: Malignant: Nasopharyngeal'';

■ f. Revising entry for ''Otosclerosis'';

■ g. Adding entries for ''Pulmonary: Disease secondary to kyphoscoliosis, pectus excavatum, pectus carinatum'' and ''Pulmonary: Hypertension'';

■ h. Removing entry for ''Pulmonary: Vascular disease'' and adding in its place ''Pulmonary: Thromboembolic disease'';

■ i. Adding entry for ''Respiratory insufficiency due to spinal cord injury'';

■ j. Revising entry for ''Rhinitis'';

■ k. Adding entries for ''Rhinosinusitis'', ''Salivary gland and/or associated ducts disease other than neoplasm'', and ''Septum, nasal, deviation of'';

■ l. Removing entry for ''Sinusitis'';

■ m. Revising entry for ''Sleep Apnea Syndrome'';

■ n. Removing entry for ''Tinnitus, recurrent''; and

■ o. Adding entry for ''Vocal cord paralysis''.

The revisions and additions read as follows:

APPENDIX C TO PART 4—ALPHABETICAL INDEX OF DISABILITIES

	Diagnostic code No.
* * * * * * *	
Aphonia, organic	6230
* * * * * * *	
Pharynx	6232
* * * * * * *	
Hearing loss	6100
* * * * * * *	
Laryngectomy	6229
Laryngitis, chronic	6228
Laryngitis, tuberculosis	6227
Larynx, stenosis of	6231
* * * * * * *	
Loss of:	
* * * * * * *	
Nose, part of, or scars	6221
* * * * * * *	
Lung, transplantation of	6848
* * * * * * *	
Neoplasms:	
Benign:	
* * * * * * *	
Nasopharyngeal	6237
* * * * * * *	
Malignant:	
Nasopharyngeal	6328
* * * * * * *	
Otosclerosis, stapedectomy, stapedotomy	6202
* * * * * * *	
Pulmonary:	
Disease secondary to kyphoscoliosis, pectus excavatum, pectus carinatum	6842
Hypertension	6849
Thromboembolic disease	6817
* * * * * * *	
Respiratory insufficiency due to spinal cord injury	6841
* * * * * * *	
Rhinitis, allergic or nonallergic (vasomotor)	6240
Rhinosinusitis:	
Allergic or nonallergic (vasomotor) related	6223
Autoimmune, granulomatous or other causes	6235
Ethmoid	6233
Frontal	6224
Infection related	6234
Maxillary	6225
Pansinusitis	6222
Sphenoid	6226
* * * * * * *	
Salivary gland and/or associated ducts disease other than neoplasm	6239

APPENDIX C TO PART 4—ALPHABETICAL INDEX OF DISABILITIES—Continued

	Diagnostic code No.
* * * * * * *	
Septum, nasal, deviation of	6220
* * * * * * *	
Sleep apnea syndromes	6847
* * * * * * *	
Vocal cord paralysis	6236
* * * * * * *	

[FR Doc. 2022–02049 Filed 2–14–22; 8:45 am]
BILLING CODE 8320–01–P

DEPARTMENT OF VETERANS AFFAIRS

38 CFR Part 4

RIN 2900–AQ82

Schedule for Rating Disabilities: Mental Disorders

AGENCY: Department of Veterans Affairs.

ACTION: Proposed rule.

SUMMARY: The Department of Veterans Affairs (VA) proposes to amend the portion of the rating schedule dealing with mental disorders, including revising the General Rating Formula for Mental Disorders and combining currently separate General Rating Formula for Mental Disorders with the General Rating Formula for Eating Disorders in the VA Schedule for Rating Disabilities (VASRD or rating schedule). The proposed rule reflects changes made by the American Psychiatric Association's Diagnostic and Statistical Manual of Mental Disorders 5 (DSM–5), advances in medical knowledge, and recommendations from VA's Mental Disorders Work Group.

DATES: VA must receive comments on or before April 18, 2022.

ADDRESSES: Comments may be submitted through *www.Regulations.gov.* Comments received will be available at *www.Regulations.gov* for public viewing, inspection or copies.

FOR FURTHER INFORMATION CONTACT: Ioulia Vvedenskaya, M.D., M.B.A., Medical Officer, Regulations Staff, (210A), Compensation Service, Veterans Benefits Administration, Department of Veterans Affairs, 810 Vermont Avenue NW, Washington, DC 20420, *211PolicyStaff.Vbavaco@va.gov,* (202) 461–9700. (This is not a toll-free telephone number.)

SUPPLEMENTARY INFORMATION:

I. The Need for Updated Rating Criteria

As part of its ongoing revision of the VASRD, VA proposes changes to the rating schedule for mental disorders, including the General Rating Formula for Mental Disorders codified at 38 CFR 4.130. The proposed changes would update evaluation criteria based on the DSM–5, medical advances since the last substantive revision of the rating schedule for mental disorders in 1996, and current understanding of functional impairment associated with, or resulting from, mental disorders. These changes also reflect comments received from subject matter experts in the Veterans Benefits Administration (VBA), Veterans Health Administration (VHA), Board of Veterans' Appeals (BVA), Department of Defense (DoD), and Veterans Service Organizations (VSOs). Overall, VA did not rely on one particular input for these proposed changes, but the multitude of published, publicly available, and peer-reviewed, scientific and medical sources cited below.

In 2006, the Veterans' Disability Benefits Commission (VDBC) asked the Institute of Medicine (IOM) (now named the National Academy of Medicine) to study and recommend improvements for the VASRD. The IOM recommended updating the medical content of the rating schedule, by placing greater emphasis on a disabled veteran's ability to function in the work setting, rather than focusing on symptoms alone. Institute of Medicine, ''A 21st Century System for Evaluating Veterans for Disability Benefits'' 113–14 (Michael McGeary et al. eds., 2007).

In March 2015, VA published a final rule (RIN 2900–AO96) that updated the nomenclature for mental disorders and removed outdated references to the fourth editions of DSM (DSM–IV and DSM–IV–TR), replacing them with references to the latest fifth edition (DSM–5). While this rule updated the nomenclature to conform to the DSM–5, VA did not update the rating criteria used to evaluate mental disorders.

VA now proposes, however, to update the rating criteria for mental disorders in accord with IOM's recommendation and the latest medical science. VA's updates are based on the framework associated with the International Classification of Functioning, Disability, and Health (ICF) and its companion assessment instrument, the World Health Organization (WHO) Disability Assessment Schedule 2.0 (WHODAS 2.0), as well as the International Classification of Diseases (ICD), and concepts and methodology from the DSM–5.

The WHODAS 2.0 is a validated instrument that assesses health and disability across all diseases, including mental, neurological, and addictive disorders. O. Garin et al., ''Validation of the 'World Health Organization Disability Assessment Schedule, WHODAS–2' in patients with chronic diseases,'' 8 Health and Quality of Life Outcomes 51 (2010). It assesses the ability to perform tasks in six functional domains by measuring the impact of a disability across various life functions and assigning a score for each domain. ''WHO Disability Assessment Schedule 2.0 (WHODAS 2.0),'' World Health Organization, *https://www.who.int/classifications/icf/whodasii/en/* (last visited Nov. 19, 2019) (hereinafter ''WHODAS 2.0'').

The ICD is a standard tool for the diagnosis of disabilities for the purposes of epidemiology, health management, and clinical practice. By employing a standardized numerical labeling system, the ICD allows disease to be classified, monitored, and analyzed for statistical purposes. ''Classifications,'' World Health Organization, *https://www.who.int/classifications/en/* (last visited Nov. 19, 2019).

Finally, the DSM–5 is a standardized classification of mental disorders for mental health professionals in the

United States. The DSM–5 contains every mental health disorder recognized by the American Psychiatric Association and provides detailed diagnostic criteria. As a standard for mental health, the DSM–5 is also used to collect data regarding public health matters involving psychiatric disorders. *See generally* American Psychiatric Association (APA), ''Diagnostic and Statistical Manual of Mental Disorders'' (American Psychiatric Publishing, 5th ed. 2013) (hereinafter ''DSM–5'').

Previous versions of the DSM relied upon a categorical diagnostic classification scheme requiring a clinician to determine whether a disorder was absent or present with a multiaxial system, each axis of which gave a different type of information about the diagnosis. Axis V, in particular, was comprised of the Global Assessment of Functioning (GAF) scale, which was used by clinicians to assess an individual's overall level of functioning on a hypothetical continuum of mental health illness.

The DSM–5 eliminates the multiaxial approach and instead provides for a ''dimensional approach, which allows a clinician more latitude to assess the severity of a condition.'' APA, ''DSM–5's Integrated Approach to Diagnosis and Classifications,'' *https://www.psychiatry.org/File%20Library/Psychiatrists/Practice/DSM/APA_DSM-5-Integrated-Approach.pdf.* According to the APA, a growing body of scientific evidence supports multi-faceted or multi-dimensional concepts in assessing functional impairment due to mental disorders. DSM–5 at 733–737. Clinicians who assess the consequences of mental disorders should consider a combination of all domains of functioning, and a comprehensive approach incorporates variations of features within the individual, rather than relying on a simple combination of presented symptoms. *Id.*

This dimensional approach incorporates differential severity of individual symptoms both within and outside of a disorder's diagnostic criteria as measured by intensity, duration, or number of symptoms, along with other features such as type and severity of disabilities. DSM–5 at 733. In sum, the dimensional approach is consistent with current diagnostic practice and comprehensively examines the functional consequences of a mental disability. *Id.; see* Lonnie R. Bristow, *Preface to* ''A 21st Century System for Evaluating Veterans for Disability Benefits'' xii (some of the signature injuries incurred in Operations Enduring Freedom/Iraqi Freedom, such as posttraumatic stress disorder (PTSD), must be evaluated in terms of their functional consequences). Accordingly, the DSM–5 now advocates for assessments like the WHODAS 2.0, which ''has proven useful as a standardized measure of disability for mental disorders.'' DSM–5 at 21. The WHODAS 2.0 corresponds to concepts contained in the WHO's ICF. T. Bedirhan Üstün et al., ''Developing the World Health Organization Disability Assessment Schedule 2.0,'' Bull. World Health Organ. 815 (2010) (hereinafter ''Developing WHODAS 2.0''). The WHODAS 2.0 does not depend on symptom levels. Rather, the WHODAS 2.0 is a 36-item or 12-item measure that assesses an individual's performance over the past 30 days in activities in the following six domains (areas of functioning): (1) Understanding and communication; (2) getting around; (3) self-care; (4) getting along with people; (5) life activities; and (6) participation in society. World Health Organization, ''Measuring Health and Disability Manual for WHO Disability Assessment Schedule WHODAS 2.0'' 4–5 (T.B. Üstün et al. eds., 2010) (hereinafter ''Manual''). The WHODAS 2.0 asks how much difficulty the individual has had performing certain activities within each domain using the following scale: No difficulty (1), mild difficulty (2), moderate difficulty (3), severe difficulty (4), and extreme difficulty or cannot do (5). *Id.* at 38, 41.

The WHODAS 2.0 is similar to the Clinician-Administered PTSD Scale for DSM–5 (CAPS–5), which is the ''gold standard in PTSD assessment.'' *See* Frank W. Weathers et al., ''The Clinician-Administered PTSD Scale for DSM–5 (CAPS–5)'' (2013), cited at *https://www.ptsd.va.gov/professional/assessment/adult-int/caps.asp* (last visited Nov. 19, 2019) (hereinafter ''Weathers 2013''); Frank W. Weathers et al., ''The Clinician-Administered PTSD Scale for DSM–5 (CAPS–5): Development and Initial Psychometric Evaluation in Military Veterans,'' Psychol. Assess. 30(3) (2018), available at *https://www.ncbi.nlm.nih.gov/pmc/articles/PMC5805662/* (last visited Nov. 19, 2019). The CAPS–5 is a 30-item structured interview administered by clinicians and clinical researchers that is used to render a diagnosis of PTSD and assess the severity of the 20 PTSD symptoms in the DSM–5 based on symptom frequency and intensity using a scale similar to the WHODAS 2.0, *i.e.,* absent (0), mild (1), moderate (2), severe (3), and extreme (4). *See* Weathers 2013, *supra.* The scores for frequency and intensity are combined to form a single severity score for each symptom, and a total severity score is calculated by combining all the individual severity scores for the 20 PTSD symptoms. *Id.*

There is evidence that a standardized assessment for disability related to mental disorders, such as the WHODAS 2.0 and CAPS–5, leads to a more reliable and valid disability examination process. IOM, ''Psychological Testing in the Service of Disability Determination'' 66 (2015), *https://www.nap.edu/read/21704.* The WHODAS 2.0 ''has good psychometric qualities, including good reliability and item-response characteristics'' and shows concurrent validity when compared with other measures of disability or health status or with clinician ratings. Developing WHODAS 2.0, *supra.* A VA study compared clinical interviews with standardized assessments that incorporated the CAPS–5 for PTSD diagnosis and the WHODAS 2.0 for functional impairment and found that administering a standardized disability assessment resulted in more complete assessment of functional impairment and diagnostic coverage of PTSD. Ted Speroff et al., ''Compensation and Pension Examination for PTSD,'' VA Office of Health Services Research & Development Service Forum 7 (May 2012). VA therefore proposes a General Rating Formula for Mental Disorders, h is explained below, that would provide a standardized assessment of disability similar to the WHODAS 2.0 and CAPS–5. It would also create a common language between clinicians and adjudicators, which VA believes will lead to more efficient and accurate adjudication of claims for mental disorders.

Another important purpose for updated rating criteria is the fact that, since September 11, 2001, the United States has deployed more than 2.5 million American service members to Iraq, Afghanistan, and other dangerous regions around the world. These deployments have exposed service members to a variety of stressors, including sustained risk of, and exposure to, injury and death, as well as an array of family pressures. U.S. Department of Defense, ''DoD, VA, Other Agencies Team to Study PTSD, TBI,'' American Forces Press Service (Aug. 14, 2013) *https://archive.defense.gov/News/NewsArticle.aspx?ID=120620* (last visited Nov. 19, 2019). Multiple deployments involve prolonged exposure to combat-related stressors. The psychological toll of these deployments must be taken seriously. RAND Corporation, *Preface to* ''Invisible Wounds of War: Psychological and Cognitive Injuries, Their Consequences, and Services to Assist Recovery'' iii (T.

Tanielian & L.H. Jaycox eds., 2008). Recent reports have referred to PTSD and traumatic brain injury (TBI) as the signature wounds of the conflicts in Afghanistan and Iraq. *Id.* With increasing incidence of suicide and suicide attempts among returning veterans, concern about depression and other mental health disorders is also on the rise.

Indeed, individuals with mental disorders such as depression, anxiety and adjustment disorders frequently experience recurrent absences from work. I. Arends et al., ''Prevention of Recurrent Sickness Absence in Workers with Common Mental Disorders: Results of a Cluster-Randomized Controlled Trial,'' 71 Occupational Envtl Med. 21 (2014). As compared to physical disorders, mental disorders cause less engagement in life activities, including work. M.A. Buist-Bouwman et al., ''Comparing Functioning Associated with Mental and Physical disorders,'' 113 Acta Psychiatr. Scand. 499 (2006). One comprehensive study based on a WHO questionnaire estimated that employees with bipolar disorder lost the equivalent of about 28 work days annually from sick time and other absences. ''Mental health problems in the workplace,'' Harvard Mental Health Letter (Feb. 2010), *https://www.health.harvard.edu/newsletter_article/mental-health-problems-in-the-workplace; see also* N.L. Kleinman et al., ''Lost Time, Absence Costs, and Reduced Productivity Output for Employees With Bipolar Disorder,'' 47 J. Occupational & Envtl. Med. 1117, 1121 (Nov. 2005). Moreover, compared to the general population, the risk of recurrent sickness absence is higher for employees with mental disorders, and such recurrent absences are often more serious and long-lasting. *See* 71 Occupational Envtl Med. at 21.

As the understanding of mental disorders has advanced, so has the ability to recognize and quantify the components that form both the diagnosis as well as its attendant disability. Therefore, VA proposes to update the section of the rating schedule that addresses mental disorders to provide clear, consistent, and accurate evaluation criteria. Updating the General Rating Formula for Mental Disorders will also improve the timeliness and accuracy of adjudications by providing uniform objective criteria based on modern medical science.

Finally, the proposed changes are necessary to address potential inadequacies in the current mental health criteria of the VASRD. In August 2007, the Center for Naval Analyses (CNA) prepared an earnings loss study in response to a request from the VDBC to assess compensation levels under the VASRD. Eric Christensen et al., ''Final Report for the Veterans' Disability Benefits Commission: Compensation, Survey Results, and Selected Topics'' (CNA 2007). The study found that those veterans with primary mental disabilities do not receive adequate compensation to offset any earnings losses. *Id.* at 193. On the basis of its findings, CNA recommended that VA review and adjust evaluations for mental disorders to provide adequate compensation for earnings losses. *Id.*

Another study, completed by Economic Systems, Inc. (EconSys), in September 2008, focused on the adequacy of VA benefits to compensate for loss of earnings and functional impairment. EconSys, ''A Study of Compensation Payments for Service-Connected Disabilities'' (2008). Like CNA, EconSys found that veterans with mental disorders generally were undercompensated by the VASRD. *Id.* at 33. EconSys also recommended a re-evaluation of the criteria for mental disorders, noting that VA should update the VASRD to reflect modern medical science. *Id* at 35.

Given the foregoing, VA proposes to adopt new evaluation criteria that more accurately capture the occupational impairment caused by mental disabilities and provide more adequate compensation for the earnings losses experienced by veterans with service-connected mental disorders. A more detailed discussion of the specific evaluation criteria VA proposes and how VA will apply it follows.

II. The Current Rating Schedule and a New Framework for Evaluation

The current rating schedule for mental disorders provides two separate rating formulas, the General Rating Formula for Mental Disorders and the Rating Formula for Eating Disorders. The General Rating Formula for Mental Disorders bases evaluations on a list of signs and symptoms that characteristically produce a particular level of disability. 61 FR 52695, 52700 (Oct. 8, 1996). VA believes that an updated formula considering the severity, frequency and duration of symptoms would provide the most accurate and consistent method for evaluating functional impairment.

The current Rating Formula for Eating Disorders bases evaluations on the extent of weight loss, incapacitating episodes, and required periods of hospitalization, in accordance with the now-outdated DSM–IV. 60 FR 54825, 54829 (Oct. 26, 1995). VA believes that an updated formula can better evaluate how symptoms or episodes attributable to eating disorders actually translate into functional and occupational impairment.

As noted above, the understanding of disability resulting from mental disorders has evolved with the science. The IOM report recognized that some of the signature injuries (*e.g.,* PTSD) incurred in Operations Enduring Freedom/Iraqi Freedom are not visible or subject to a laboratory test. *See also* Bristow, *supra.* Instead, they must be evaluated in terms of their functional consequences. *Id.* In that regard, properly evaluating mental disability requires the ability to recognize and quantify the components that form the diagnosis as well as resulting impairment. While symptoms determine the diagnosis, they do not necessarily translate directly to functional impairment. Thus, we believe that, in order to accurately measure functional impairment, VA must consider the frequency and severity of the symptoms and how they impact functioning and performance across a variety of domains: That, is aspects of human behavior and functioning.

To ensure evaluations are accurate and consistent with modern medicine, VA is proposing a new, comprehensive general rating formula for all mental disorders, to include eating disorders. The proposed evaluation criteria will measure a veteran's essential ability to participate in the work environment and the impact of the mental disorder on earning capacity via a comprehensive assessment of occupational and social functioning. Diagnoses must still be established according to the DSM–5. 38 CFR 4.125(a). However, once an examiner has diagnosed a specific mental disorder, the proposed rating criteria will enable VA to assign an evaluation by analyzing the frequency, intensity, and overall severity of occupational and social impairment due to the diagnosed mental disorder and in accordance with the updated clinical standards of the DSM–5.

The proposed evaluation criteria, as further discussed below, encapsulate the dimensional approach of the WHODAS 2.0, ICD, DSM–5, and CAPS–5.

III. The Proposed General Rating Formula for Mental Disorders

A. Domains of Functional Impairment

Congress requires VA to base its rating schedule, ''as far as practicable, upon the average impairments of earning capacity'' in ''civil occupations'' that a veteran will experience due to the

disability in question. 38 U.S.C. 1155. VA recognizes that a veteran's earning capacity after disability is highly dependent upon both occupational and social functioning. Studies have shown that the objective evaluation of functional performance, rather than subjective criteria, is a strong predictor of impairment in earning capacity in individuals with a diagnosed mental disorder. A. Galvao et al., ''Predicting Improvement in Work Status of Patients With Chronic Mental Illness After Vocational and Integrative Rehabilitation Measurements,'' 44 Rehabilitation 208, 208–14 (2005). VA has therefore determined that a multidimensional approach to evaluating mental disorders will provide the most efficient and satisfactory method for measuring the impact of mental health disabilities on a veteran's earning capacity.

VA would continue to require that a diagnosis of a mental disorder be established in accordance with the DSM–5 as required by 38 CFR 4.125(a). However, for purposes of rating the extent of disability attributable to a mental disorder, VA proposes a rating formula using five domains of functioning to evaluate the extent of disability, similar to the approach of the WHODAS 2.0.

As explained above, the WHODAS 2.0 assesses an individual's ability to perform life activities based upon six domains (areas of functioning): (1) Understanding and communicating, (2) ability to move and get around, (3) caring for oneself, (4) getting along with people, (5) carrying out life activities, and (6) participating in society. However, ''getting along with people'' and ''participation in society'' can essentially be categorized as one domain of ''interpersonal interactions and relationships'' for VA's purpose of evaluating a veteran's earning capacity. 38 U.S.C. 1155. Therefore, the proposed General Rating Formula for Mental Disorders would evaluate the extent of a veteran's disability based upon all evidence of record relevant to the following five domains: (1) Cognition (*i.e.,* understanding and communicating), (2) interpersonal interactions and relationships (*i.e.,* interacting with people and participating in society), (3) task completion and life activities, (4) navigating environments (*i.e.,* getting around), and (5) self-care.

The domain of ''Cognition'' would assess a veteran's mental processing involved in gaining knowledge and comprehension. These processes include, but are not limited to, memory, concentration, attention, goal setting, speed of processing information, planning, organizing, prioritizing, problem solving, judgment, decision making, or flexibility in adapting when appropriate.

The domain of ''Interpersonal Interactions and Relationships'' would assess a veteran's ability to effectively interact with other people in both social and occupational settings and participate in society. This domain includes both informal (social, associational, etc.) and formal (coworkers, supervisors, etc.) relationships.

The domain of ''Task Completion and Life Activities'' would assess a veteran's ability to manage task-related demands. This domain includes, but is not limited to, the following types of activities: Vocational, educational, domestic chores, social, or caregiving.

The domain of ''Navigating Environments'' would assess a veteran's physical and mental ability to go from place to place. This domain includes, but is not limited to, the following: leaving the home, being in confined or crowded spaces, independently moving in surroundings, navigating new environments, driving, or using public transportation.

The domain of ''Self-Care'' would assess a veteran's ability to take care of himself or herself. This domain would include, but would not be limited to, the following types of activities: Hygiene, dressing appropriately, or nourishment.

B. Assessing the Level of Functioning

In order to accurately measure occupational and social impairment due to a mental disorder, VA proposes to measure a veteran's functioning within each of the five domains discussed above based upon the level of difficulty the veteran experiences in performing tasks associated with the domain (intensity) and the percentage of time that these difficulties occur (frequency). *See* Jon D. Elhai et al., ''Posttraumatic Stress Disorder's Frequency and Intensity Ratings Are Associated With Factor Structure Differences in Military Veterans,'' 22 Psychol. Assess. 723 (2010); A.J. Rush, Jr., et al., ''Handbook of Psychiatric Measures'' 103–05 (American Psychiatric Publishing, 2d ed. 2008). This approach would be outlined in 38 CFR 4.126(a), which will state that, when evaluating a mental disorder, an adjudicator must consider the intensity and frequency of psychiatric symptoms that bear on the five domains discussed above. Section 4.126(a) would also state that VA will assess the intensity and frequency of symptoms in each domain and will assign an evaluation based on the combined levels of functioning in these domains as explained in the General Rating Formula For Mental Disorders. VA would delete paragraph (b) of current section 4.126, which provides that VA will consider social impairment but will not assign an evaluation ''solely on the basis of social impairment,'' as obsolete, because that principle would be more clearly addressed in one of the domains for assessment, providing for consideration of ''interpersonal interactions and relationships.'' Paragraphs (c) and (d) would be redesignated as paragraphs (b) and (c), respectively.

As to the proposed General Rating Formula, there will be 100, 70, 50, 30, and 10 percent evaluations based on the severity of impairment in all five domains. To measure the severity in an individual domain, VA will first evaluate the intensity of impairment in that domain. Intensity refers to the difficulties in functioning, *i.e.,* interference with completing tasks. The levels of intensity for each domain will be none, mild, moderate, severe, or total, generally defined as follows:

''None''—''No difficulties'' associated with the domain;

''Mild''—''Slight difficulties in one or more aspects'' of the domain that ''do not interfere with tasks, activities, or relationships;''

''Moderate''—''Clinically significant difficulties in one or more aspects'' of the domain ''that interfere with tasks, activities, or relationships;''

''Severe''—''Serious difficulties in one or more aspects'' of the domain ''that interfere with tasks, activities, or relationships;''

''Total''—''Profound difficulties in one or more aspects'' of the domain ''that cannot be managed or remediated; incapable of even the most basic tasks within one or more aspects'' of the domain; ''difficulties that completely interfere with tasks, activities, or relationships.''

As a technical note, the ''task completion and life activities'' domain uses slightly different criteria to define these levels, and several of the domains consider the effect of accommodations or assistance in their assessment.

When evaluating intensity under the proposed criteria, examiners and VA adjudicators should be cognizant of the fact that some symptoms may overlap between domains. VA will provide training or additional guidance to help avoid the artificial inflation of the severity of a condition through the double-counting of symptoms. *Cf.* 38 CFR 4.14. Moreover, consistent with 38 U.S.C. 1155 (VASRD shall compensate for impairments in earning capacity), examiners and VA adjudicators generally should assess impairments with a view toward their effect on earning capacity. Finally, examiners and

VA adjudicators generally should assess impairments due to the service-connected disability, not other causes. *See* ICF Checklist (Version 2.1a, Clinician Form) (''The level of capacity should be judged relative to that normally expected of the person, or the person's capacity before they acquired their health condition.''), *https://www.who.int/classifications/icf/icfchecklist.pdf?ua=1; see also* Manual at 39 (WHODAS 2.0 responses should address difficulties with activities due to health conditions, rather than to other causes). Again, training and additional guidance will be provided to VA personnel for further edification on appropriately applying the revised general rating formula.

After determining the intensity for each domain, VA would address frequency. Frequency refers to the percentage of time, in the past month, that impairment occurs. Consistent with the WHO's ICF Checklist rates and the CAPS–5, VA proposes to differentiate between impairment occurring less than 25 percent of the time over the past month, and 25 percent of the time or more over the past month. The CAPS–5 distinguishes in its ratings between a frequency of ''some of the time'' (20 to 30 percent) and more frequent occurrences. Weathers 2013, *supra.* The WHO's ICF checklist, upon which the WHODAS 2.0 is based, similarly distinguishes between impairments that are present less than 25 percent of the time and those occurring more than 25 percent of the time in the past month. *See* ICF Checklist, pt. 2; *see also* Manual at 39 (''Recall abilities are most accurate for the period of one month.''). Like other validated measures, VA recognizes that impairments that occur 25 percent or more of the time present a greater impact on social and occupational functioning than those that occur less frequently.

Consideration of both the intensity and frequency would yield the level of impairment of functioning in each domain, and each level would correlate to a numerical value, ranging from 0 to 4, which would be defined as follows:

''0 = None''—''No difficulties;''

''1 = Mild impairment at any frequency; or moderate impairment that occurs less than 25% of the time;''

''2 = Moderate impairment that occurs 25% or more of the time; or severe impairment that occurs less than 25% of the time;''

''3 = Severe impairment that occurs 25% or more of the time; or total impairment that occurs less than 25% of the time;'' and

''4 = Total impairment that occurs 25% or more of the time.''

C. Assigning a Disability Rating

Once an adjudicator determines the level of impairment of functioning for each domain caused by a mental disorder, VA would assign an evaluation of 10, 30, 50, 70, or 100 percent for the disorder based upon the numerical value for each domain and the number of domains affected. VA would assign the following ratings based upon the following criteria:

Disability rating	Score	
	Level of impairment (0–4)	Number of affected domains
100	4	in 1 or more domains.
	3	in 2 or more domains.
70	3	in 1 domain.
	2	in 2 or more domains.
50	2	in 1 domain.
30	1	in 2 or more domains.
10	Minimum rating.	

As reflected in this formula, veterans who have more severe impairment in more domains will receive higher ratings. Veterans with less severe impairment in less domains will receive lower ratings. But, notably, a numerical value of 4 in just one domain will warrant a 100 percent rating; and a numerical value of 3 in just one domain will warrant a 70 percent rating. This criterion should generally lead to more generous compensation for veterans than the current rating formula, which requires ''total occupational and social impairment'' for a 100 percent rating and ''deficiencies in most areas'' for a 70 percent rating. Moreover, VA proposes to eliminate the current rating formula's provision for a noncompensable rating, and to provide a minimum rating of 10 percent for all mental disorders. This is because a disorder that meets the DSM–5 requirements for being a mental disorder must include elements indicative of both harm and dysfunction. Michael B. First et al., ''Diagnostic Criteria as Dysfunction Indicators: Bridging the Chasm Between the Definition of Mental Disorder and Diagnostic Criteria for Specific Disorders,'' 58 Canadian J. of Psychiatry 663, 665 (Dec. 2013). Thus, a DSM–5 disorder will rarely produce zero dysfunction. *Id.* Because the DSM–5 requirements represent thresholds of minimal clinical confidence that a dysfunction is present, VA will assign at least a 10 percent rating for such disorders. *Id.* at 668.

IV. Elimination of Rating Formula for Eating Disorders

As previously noted, current § 4.130 includes two separate rating formulae for mental disorders—the General Rating Formula for Mental Disorders and the Rating Formula For Eating Disorders. VA created a separate Formula for Eating Disorders ''because their more disabling aspects are manifested primarily by physical findings rather than by psychological symptoms.'' 60 FR at 54829. The current Rating Formula for Eating Disorders bases evaluations on the extent of weight loss, incapacitating episodes, and required periods of hospitalization. *Id.* However, in the DSM–5 at 339, the only eating disorder for which weight is a diagnostic criterion is anorexia nervosa, and body mass index (BMI) (weight in kilograms divided by height in meters squared (kg/m^2)) is used to specify the current severity of the disorder. Weight and BMI are not diagnostic criteria in the DSM–5 for other eating disorders, such as bulimia nervosa and binge-eating disorder, nor are they specifiers for the severity of other eating disorders. DSM–5 at 329–54.

As explained above, assessments like the WHODAS 2.0 can be used to assess an individual's ability to perform life activities based upon six areas of functioning as a result of *any* disorder, including eating disorders. Liza H. Gold, ''DSM–5 and the Assessment of Functioning: The World Health Organization Disability Assessment Schedule 2.0 (WHODAS 2.0),'' 42 J. Am

Acad. Psychiatry L. 173, 174–75 (2014). The test-retest reliability, internal consistency, and concurrent validity of the WHODAS 2.0 in comparison to other instruments for measuring disability has been established in various patient populations and in general population samples. Manual at 19–25. Based upon the diagnostic criteria and severity specifiers for most eating disorders in the DSM–5 and the universal applicability of the WHODAS 2.0, VA no longer sees a need for a separate rating formula for eating disorders, and VA proposes to instead evaluate the extent of disability caused by eating disorders based upon the effect of an individual's disorder on the five domains of functioning under the General Rating Formula for Mental Disorders discussed above. VA seeks comment on this approach.

V. Proof-of-Concept Study

To derive the appropriate level to assign to each domain (*e.g.,* 0 through 4), VA conducted a proof-of-concept study with 100 veterans with service-connected mental disorders. Commonly known as feasibility studies, proof-of-concept studies are designed to examine new methods or treatments. The results of such studies improve the program or evaluation procedure before using it on a larger scale. L. Thabane et al., ''A tutorial on pilot studies: the what, why, and how,'' BMC Medical Research Methodology 10:1, *https://www.biomedcentral.com/content/pdf/1471-2288-10-1.pdf* (last visited Nov. 19, 2019).

VA identified four specific aims of the proof-of-concept study to examine the feasibility of the proposed rating criteria for mental disorders. The first objective was to examine the distribution of evaluations under the current and proposed rating criteria for mental disorders. The second objective was to examine the extent to which the revised Mental Disorders Disability Benefits Questionnaire (DBQ) would adequately collect information needed to rate disabilities based upon the proposed rating criteria. The third objective was to examine the extent to which adjudicators were easily able to extract rating data from the revised DBQ and apply the new evaluation criteria. The fourth objective was to examine the extent to which Compensation and Pension (C&P) examiners found the revised DBQ adequate and easy to use.

Regarding the first objective, the proof-of-concept study found that the proposed General Rating Formula for Mental Disorders would increase the average disability evaluation. Compared to the current rating formula, fewer veterans would be rated at or below 50 percent disability and more would be rated above 50 percent under the proposed criteria. The two formulae seemed to yield similar results at 70 percent disabling, and the number of veterans who would receive 100 percent disability was greater under the proposed criteria than under the current criteria.

Regarding the second objective, adjudicators reported that the revised Mental Disorders DBQ provided all the information they needed to evaluate based on the proposed criteria. Regarding the third objective, adjudicators reported that they were easily able to extract rating data from the revised DBQ and apply new evaluation criteria. Finally, C&P examiners reported that the revised DBQ was adequate and easy to use in a clinical setting.

Importantly, one major theme in the feedback regarding mental disorders has been the need for a common language in the VASRD—a language familiar to both clinicians and adjudicators. According to the proof-of-concept study results, VA achieved this objective with the proposed General Rating Formula for Mental Disorders.

VI. Notes to the Proposed General Rating Formula

VA proposes to add three notes at the end of the General Rating Formula for Mental Disorders to promote greater consistency and accuracy in applying the criteria.

The first note would provide that only one evaluation will be assigned for co-existing service-connected mental disorders. According to 38 U.S.C. 1155, the VA rating schedule shall compensate veterans for ''impairments of earning capacity,'' not specific diagnoses. And according to 38 CFR 4.14, evaluations of the same disability or manifestation under different diagnoses is to be avoided. Most mental disorders are ''composed of multiple emotional, cognitive, and behavioral dimensions, many of which are shared across disorders.'' Lee Ann Clark et al., ''Three Approaches to Understanding and Classifying Mental Disorder: ICD–11, DSM–5, and the National Institute of Mental Health's Research Domain Criteria (RDoC),'' 18 Psychol. Sci. in the Pub. Int. 72, 112 (2017). In addition, co-existing mental disorders, that is, comorbidity, ''is the rule rather than the exception.'' *Id.* Therefore, consistent with 38 U.S.C. 1155 and the rule against pyramiding, 38 CFR 4.14, Note (1) will instruct adjudicators not to assign individual disability ratings to more than one mental disorder given the likelihood of comorbid mental disorders and the prevalence of overlapping symptoms among such disorders.

The second note would explain that evaluations under the General Rating Formula for Mental Disorders would consider any ameliorating effects of medications prescribed for a mental disorder. In other words, if a veteran were receiving medication for a mental disability, VA would rate only the disabling symptomatology that exists after the ameliorative effects of medication are taken into account. We are adding this note because in *Jones* v. *Shinseki,* 26 Vet. App. 56, 63 (2012), the United States Court of Appeals for Veterans Claims held that, ''[a]bsent a clear statement [in the rating criteria] setting out whether or how the Board [of Veterans' Appeals (Board)] should address the effects of medication,'' the Board should not take those effects into account when evaluating a claimant's disability. However, consideration of ameliorating effects of medications is consistent with 38 CFR 4.2, which states that VA adjudicators should consider a disability ''from the point of view of the veteran working or seeking work'' and provide a current rating that ''accurately reflect[s] the elements of disability present.'' VA adjudicators should not be basing ratings on speculation of how severe a veteran's disability might be if he or she were not taking medication; the rating should be based on the actual elements of disability present. *See generally McCarroll* v. *McDonald,* 28 Vet. App. 267, 276–78 (2016) (Kasold, J., concurring in part).

The third note would explain that, in evaluating frequency, VA adjudicators should consider the percentage of time, in a given month, that impairment occurs. As discussed above, this is consistent with the WHO's ICF Checklist rate. VA seeks comment on the three proposed notes.

VII. Technical Amendments

Finally, VA proposes to update Appendix A of part 4 to reflect the above proposed amendments to the rating schedule for mental disorders.

Executive Orders 12866 and 13563

Executive Orders 12866 and 13563 direct agencies to assess the costs and benefits of available regulatory alternatives and, when regulation is necessary, to select regulatory approaches that maximize net benefits (including potential economic, environmental, public health and safety effects, and other advantages; distributive impacts; and equity). Executive Order 13563 (Improving Regulation and Regulatory Review)

emphasizes the importance of quantifying both costs and benefits, reducing costs, harmonizing rules, and promoting flexibility. The Office of Information and Regulatory Affairs has determined that this rule is an economically significant regulatory action under Executive Order 12866. The Regulatory Impact Analysis associated with this rulemaking can be found as a supporting document at *www.regulations.gov.*

Regulatory Flexibility Act

The Secretary hereby certifies that this rulemaking will not have a significant economic impact on a substantial number of small entities as they are defined in the Regulatory Flexibility Act (5 U.S.C. 601–612). The certification is based on the fact that no small entities or businesses would be subject to the rating criteria revisions or assign evaluations for disability claims. Therefore, pursuant to 5 U.S.C. 605(b), the initial and final regulatory flexibility analysis requirements of 5 U.S.C. 603 and 604 do not apply.

Unfunded Mandates

The Unfunded Mandates Reform Act of 1995 requires, at 2 U.S.C. 1532, that agencies prepare an assessment of anticipated costs and benefits before issuing any rule that may result in the expenditure by State, local, and tribal governments, in the aggregate, or by the private sector, of $100 million or more (adjusted annually for inflation) in any given year. This proposed rule would have no such effect on State, local, and tribal governments, or on the private sector.

Paperwork Reduction Act

This proposed rule contains no provisions constituting a collection of information under the Paperwork Reduction Act of 1995 (44 U.S.C. 3501–3521).

Assistance Listing

The Assistance Listing numbers and titles for this rule are 64.104, Pension for Non-Service-Connected Disability for Veterans; 64.109, Veterans Compensation for Service-Connected Disability; and 64.110, Veterans Dependency and Indemnity Compensation for Service-Connected Death.

List of Subjects in 38 CFR Part 4

Disability benefits, Pensions, Veterans.

Signing Authority

Denis McDonough, Secretary of Veterans Affairs, approved this document on July 9, 2021 and authorized the undersigned to sign and submit the document to the Office of the Federal Register for publication electronically as an official document of the Department of Veterans Affairs.

Michael P. Shores,

Director, Office of Regulation Policy & Management, Office of the Secretary, Department of Veterans Affairs.

For the reasons set out in the preamble, VA proposes to amend 38 CFR part 4, subpart B as set forth below:

Part 4—SCHEDULE FOR RATING DISABILITIES

■ 1. The authority citation for part 4 continues to read as follows:

Authority: 38 U.S.C. 1155, unless otherwise noted.

■ 2. Amend § 4.126 by:
■ a. Revising paragraph (a);
■ b. Removing paragraph (b); and
■ c. Redesignating paragraphs (c) and (d) as paragraphs (b) and (c).

The revisions read as follows:

§ 4.126 Evaluations of disability from mental disorders.

(a) When evaluating a mental disorder, the rating agency shall consider all the evidence of record relevant to the intensity and frequency of psychiatric symptoms that bear on the following domains (major areas of functioning):

(1) Cognition (*i.e.,* understanding and communicating);

(2) interpersonal interactions and relationships (*i.e.,* interacting with people and participating in society);

(3) task completion and life activities;

(4) navigating environments (*i.e.,* getting around); and

(5) self-care.

The rating agency shall assess the intensity and frequency of symptoms in each domain and assign an evaluation based on the combined levels of functioning in these domains as explained in section 4.130.

* * * * *

■ 3. Amend § 4.130 by:
■ a. Republishing the entry for diagnostic code (DC) 9440;
■ b. Adding immediately following (DC) 9440, the entries for (DCs) 9520 and 9521;
■ c. Revising the table ''General Rating Formula for Mental Disorders'';
■ d. Removing immediately following the table ''General Rating Formula for Mental Disorders'' the entries for (DCs) 9520 and 9521; and
■ e. Removing the table ''Rating Formula for Eating Disorders''.

The additions and revisions read as follows:

§ 4.130 Schedule of ratings—Mental disorders.

* * * * *

9440 Chronic adjustment disorder
9520 Anorexia nervosa
9521 Bulimia nervosa

GENERAL RATING FORMULA FOR MENTAL DISORDERS

	Rating
The General Rating Formula for Mental Disorders contains five domains related to function: Cognition; interpersonal interactions and relationships; task completion and life activities; navigating environments; and self-care. The criteria below describe each domain.	
The General Rating Formula for Mental Disorders provides criteria for each domain for levels of function ranging from 0 to 4, as appropriate. The highest level of impairment, a score of 4, signifies ''total,'' and the lowest level of impairment, a score of 0, signifies ''no difficulties.''	
Evaluate based on the level of impairment in each domain and the number of affected domains, as follows:	
Level 4 in one or more domains, or Level 3 in two or more domains	100
Level 3 in one domain, or Level 2 in two or more domains	70
Level 2 in one domain	50
Level 1 in two or more domains	30
Minimum rating	10

Note (1): Coexisting mental disorders cannot receive distinct and separate disability evaluations without violating the anti-pyramiding regulation of § 4.14. Therefore, assign a single evaluation reflecting all impairment due to coexisting service-connected mental disorders using the General Rating Formula in this section.

Note (2): Include any ameliorating effects of medications when evaluating the extent of disability under the General Rating Formula in this section.

Note (3): In evaluating frequency of impairment, consider the percentage of time, in a given month, that impairment occurs.

Domain	Level of impairment	Criteria
1. *Cognition:* May include, but is not limited to, memory, concentration, attention, goal setting, speed of processing information, planning, organizing, prioritizing, problem solving, judgment, making decisions, or flexibility in adapting when appropriate.		
	0 = None	No difficulties: Cognitive functioning intact.
	1 = Mild impairment at any frequency; or moderate impairment that occurs less than 25% of the time.	Mild: Slight difficulties in one or more aspects of cognitive functioning that do not interfere with tasks, activities, or relationships.
	2 = Moderate impairment that occurs 25% or more of the time; or severe impairment that occurs less than 25% of the time.	Moderate: Clinically significant difficulties in one or more aspects of cognitive functioning that interfere with tasks, activities, or relationships.
	3 = Severe impairment that occurs 25% or more of the time; or total impairment that occurs less than 25% of the time.	Severe: Serious difficulties in one or more aspects of cognitive functioning that interfere with tasks, activities, or relationships.
	4 = Total impairment that occurs 25% or more of the time	Total: Profound difficulties in one or more aspects of cognitive functioning that cannot be managed or remediated; incapable of even the most basic tasks within one or more aspects of cognitive functioning; difficulties that completely interfere with tasks, activities, or relationships.
2. *Interpersonal interactions and relationships:* Includes both informal (social, associational, etc.) and formal (coworkers, supervisors, etc.).		
	0 = None.	No difficulties: Individual able to have relationships and interact with others at work, school, and other contexts.
	1 = Mild impairment at any frequency; or moderate impairment that occurs less than 25% of the time.	Mild: Slight difficulties in one or more aspects of interpersonal functioning that do not interfere with tasks, activities, or relationships.
	2 = Moderate impairment that occurs 25% or more of the time; or severe impairment that occurs less than 25% of the time.	Moderate: Clinically significant difficulties in one or more aspects of interpersonal functioning that interfere with tasks, activities, or relationships.
	3 = Severe impairment that occurs 25% or more of the time; or total impairment that occurs less than 25% of the time.	Severe: Serious difficulties in one or more aspects of interpersonal functioning that interfere with tasks, activities, or relationships, even with accommodations or assistance.
	4 = Total impairment that occurs 25% or more of the time	Total: Profound difficulties in one or more aspects of interpersonal functioning that cannot be managed or remediated; incapable of even the most basic tasks within one or more aspects of relationships; difficulties that completely interfere with tasks, activities, or relationships.
3. *Task completion and life activities:* May include, but are not limited to, the following types of activities: Vocational, educational, domestic, social, or caregiving.		
	0 = None	No difficulties: Individual able to perform tasks and participate in life activities; needs no accommodations or assistance.
	1 = Mild impairment at any frequency; or moderate impairment that occurs less than 25% of the time.	Mild: Slight difficulties in one or more aspects of task completion or life activities that were completed with minor stress or minor accommodations.
	2 = Moderate impairment that occurs 25% or more of the time; or severe impairment that occurs less than 25% of the time.	Moderate: Clinically significant difficulties in one or more aspects of task completion or life activities that were completed with significant stress or accommodations.
	3 = Severe impairment that occurs 25% or more of the time; or total impairment that occurs less than 25% of the time.	Severe: Serious difficulties in two or more aspects of task completion or life activities that were completed with significant stress and accommodations.
	4 = Total impairment that occurs 25% or more of the time	Total: Profound difficulties in two or more aspects of task completion or life activities, one of which must be vocational, that were not completed even with considerable accommodations due to overwhelming stress; incapable of even the most basic tasks within one or more aspects of task completion or life activities.
4. *Navigating environments:* May include, but is not limited to, the following: Leaving the home, being in confined or crowded spaces, independently moving in surroundings, navigating new environments, driving, or using public transportation.		
	0 = None.	No difficulties: Capability to navigate environments intact.
	1 = Mild impairment at any frequency; or moderate impairment that occurs less than 25% of the time.	Mild: Slight difficulties in one or more aspects of navigating environments that do not interfere with tasks, activities, or relationships.
	2 = Moderate impairment that occurs 25% or more of the time; or severe impairment that occurs less than 25% of the time.	Moderate: Clinically significant difficulties in one or more aspects of navigating environments that interfere with tasks, activities, or relationships.
	3 = Severe impairment that occurs 25% or more of the time; or total impairment that occurs less than 25% of the time.	Severe: Serious difficulties in one or more areas of navigating environments that interfere with tasks, activities, or relationships, even with accommodations or assistance.

Domain	Level of impairment	Criteria
	4 = Total impairment that occurs 25% or more of the time	Total: Profound difficulties in one or more aspects of navigating environments that cannot be managed or remediated; incapable of even the most basic tasks within one or more aspects of environmental navigation; difficulties that completely interfere with tasks, activities, or relationships.
5. *Self-care:* May include, but is not limited to, the following types of activities: Hygiene, dressing appropriately, or taking nourishment.		
	0 = None	No difficulties: Self-care capabilities intact.
	1 = Mild impairment at any frequency; or moderate impairment that occurs less than 25% of the time.	Mild: Slight difficulties in one or more aspects of self-care that do not interfere with tasks, activities, or relationships.
	2 = Moderate impairment that occurs 25% or more of the time; or severe impairment that occurs less than 25% of the time.	Moderate: Clinically significant difficulties in one or more aspects of self-care that interfere with tasks, activities, or relationships without accommodations or assistance.
	3 = Severe impairment that occurs 25% or more of the time; or total impairment that occurs less than 25% of the time.	Severe: Serious difficulties in one or more aspects of self-care that interfere with tasks, activities, or relationships, even with accommodations or assistance.
	4 = Total impairment that occurs 25% or more of the time	Total: Profound difficulties in one or more aspects of self-care that cannot be managed or remediated; difficulties that completely interfere with tasks, activities, or relationships, even with accommodations or assistance.

■ 4. Amend Appendix A to part 4, § 4.130, to read as follows:

Appendix A to Part 4—Table of Amendments and Effective Dates Since 1946

Sec.	Diagnostic code No.	
*	*	* * * * *
4.130	.....	Re-designated from § 4.132 November 7, 1996; General Rating Formula for Mental Disorders revision [*Effective date of final rule*].
	9520	Added November 7, 1996; criterion [*Effective date of final rule*].
	9521	Added November 7, 1996; criterion [*Effective date of final rule*].
*	*	* * * * *

(Authority: 38 U.S.C. 1155)

[FR Doc. 2022–02051 Filed 2–14–22; 8:45 am]

BILLING CODE 8320–01–P

FEDERAL MARITIME COMMISSION

46 CFR Chapter IV, Subchapter B

[Docket No. 22–04]

RIN 3072–AC90

Demurrage and Detention Billing Requirements

AGENCY: Federal Maritime Commission.

ACTION: Advance Notice of Proposed Rulemaking.

SUMMARY: The Federal Maritime Commission (Commission) is issuing this Advance Notice of Proposed Rulemaking (ANPRM) to seek comment on whether the Commission should require common carriers and marine terminal operators to include certain minimum information on or with demurrage and detention billings. Also, the Commission is interested in receiving comments on whether it should require common carriers and marine terminal operators to adhere to certain practices regarding the timing of demurrage and detention billings. These changes were recommended by the Fact Finding Officer in Commission Fact Finding 29: International Ocean Transportation Supply Chain Engagement.

DATES: Submit comments on or before March 17, 2022.

ADDRESSES: You may submit comments, identified by Docket No. 22–04, by e*mail at secretary@fmc.gov.* For comments, include in the subject line: ''Docket No. 22–04, Comments on Demurrage and Detention Billing Requirements ANPRM.'' Comments should be attached to the email as a Microsoft Word or text-searchable PDF document. Only non-confidential and public versions of confidential comments should be submitted by email.

Instructions: For detailed instructions on submitting comments, including requesting confidential treatment of comments, and additional information on the rulemaking process, see the Public Participation heading of the Supplementary Information section of this document. Note that all comments received will be posted without change to the Commission's website unless the commenter has requested confidential treatment.

Docket: For access to the docket to read background documents or comments received, go to the Commission's Electronic Reading Room at: *https://www2.fmc.gov/readingroom/proceeding/22-04.*

FOR FURTHER INFORMATION CONTACT: William Cody, Secretary; Phone: (202) 523–5725; Email: *secretary@fmc.gov.*

SUPPLEMENTARY INFORMATION:

I. Public Participation

How do I prepare and submit comments?

Your comments must be written in English. To ensure that your comments are correctly filed in the docket, please include the docket number of this document in your comments.

You may submit your comments via email to the email address listed above under **ADDRESSES**. Please include the docket number associated with this notice and the subject matter in the subject line of the email. Comments should be attached to the email as a Microsoft Word or text-searchable PDF document. Only non-confidential and public versions of confidential comments should be submitted by email.

How do I submit confidential business information?

The Commission will provide confidential treatment for identified confidential information to the extent allowed by law. If your comments contain confidential information, you must submit the following by email to the address listed above under **ADDRESSES**:

- A transmittal letter requesting confidential treatment that identifies the specific information in the comments for which protection is sought and demonstrates that the information is a trade secret or other confidential research, development, or commercial information.
- A confidential copy of your comments, consisting of the complete filing with a cover page marked ''Confidential-Restricted,'' and the confidential material clearly marked on each page. You should submit the confidential copy to the Commission by mail.
- A public version of your comments with the confidential information excluded. The public version must state ''Public Version—confidential materials excluded'' on the cover page and on each affected page and must clearly indicate any information withheld. You may submit the public version to the Commission by email or mail.

Will the Commission consider late comments?

The Commission will consider all comments received before the close of business on the comment closing date indicated above under **DATES**. To the extent possible, we will also consider comments received after that date.

How can I read comments submitted by other people?

You may read the comments received by the Commission at the Commission's Electronic Reading Room or the Docket Activity Library at the addresses listed above under **ADDRESSES**.

II. Background

As rising cargo volumes have increasingly put pressure on common carrier, port and terminal performance, demurrage and detention charges have for a variety of reasons substantially increased. Demurrage and detention charges and policies should serve the primary purpose of incentivizing the movement of cargo and promoting freight fluidity.

On July 28, 2021, Commissioner Rebecca F. Dye, the Fact Finding Officer for Fact Finding 29, recommended, among other things, that the Commission ''[i]ssue an ANPRM seeking industry views on whether the Commission should require common carriers and marine terminal operators to include certain minimum information on or with demurrage and detention billings and adhere to certain practices regarding the timing of demurrage and detention billings.'' [1] The Fact Finding Officer noted that although the Commission had declined to prescribe specific billing practices in the April 2020 interpretive rule on demurrage and detention, 46 CFR 545.5, she remained concerned about demurrage and detention billing practices and about ensuring that it is clear to shippers ''what is being billed by whom'' so that they can understand the charges.[2] The Commission approved the Fact Finding 29 recommendation on September 15, 2021.[3]

In the development of its Interpretive Rule on Demurrage and Detention, the Commission discussed but did not adopt a particular billing model, or billing and invoice timeframes to incorporate into the analysis of what constitutes reasonable demurrage and detention policies.[4] Since that time, the Commission has continued to receive complaints about billing practices and is now considering how and whether to address billing issues.

III. Discussion

A. Scope of ANPRM

The Commission is seeking industry views on whether it should regulate the demurrage and detention billing practices of common carriers and marine terminal operators (MTO). For the purposes of this ANPRM, the Commission defines the terms ''demurrage and detention'' broadly to include any charges assessed by common carriers and marine terminal operators related to the use of marine terminal space or shipping containers. Under this definition, for instance, charges assessed by common carriers for the use of containers outside a marine terminal would fall within the scope of this ANPRM regardless of whether the charges are called ''detention'' or ''per diem.'' Similarly, charges assessed because a container is taking up terminal space would fall within the scope of this ANPRM even if the charges are called something other than ''demurrage.'' Therefore, the scope of this advance notice is any charges having the purpose or effect of demurrage or detention regardless of the labels given to those charges.[5]

The Fact Finding 29 recommendation proposed regulating the billings and billing practices of both common carriers and marine terminal operators. There are two types of common carrier—vessel-operating common carriers (VOCCs) and non-vessel-operating common carriers (NVOCCs).[6] As set forth below in Section IV, the Commission seeks comments on whether a proposed regulation on demurrage and detention billing should include NVOCCs as well as VOCCs, and to what extent any regulations should differ based on the type of entity involved.[7]

Additionally, although the Fact Finding 29 recommendation suggested regulating MTO demurrage and detention billings, MTOs often do not have direct contractual relationships with shippers.[8] Rather, marine terminal operators usually have contractual relationships with VOCCs, such as via terminal services agreements.[9] However, under Commission regulations, MTOs are entitled to separately assess demurrage as an implied contract in a court of law, provided that it is published as part of a MTO schedule. Further, in the Interpretive Rule on demurrage and detention, the

[1] *See* Fact Finding Investigation No. 29, Interim Recommendations at 6 (July 28, 2021), *https://www2.fmc.gov/ReadingRoom/docs/FFno29/FF29%20Interim%20Recommendations.pdf/.*

[2] Fact Finding Investigation No. 29, Interim Recommendations at 7, *https://www2.fmc.gov/ReadingRoom/docs/FFno29/FF29%20Interim%20Recommendations.pdf/.*

[3] Fed. Mar. Comm'n, Press Release, FMC to Issue Guidance on Complaint Proceedings and Seek Comments on Demurrage and Detention Billings (Sept. 15, 2021), *https://www.fmc.gov/fmc-to-issue-guidance-on-complaint-proceedings-and-seek-comments-on-demurrage-and-detention-billings/.*

[4] 85 FR 29638, 29662 (May 18, 2020).

[5] The scope of this ANPRM does not include ocean freight bills or bills for charges that do not have the purpose of demurrage and detention, such as charges related to chassis, bunker, and documentation.

[6] 46 U.S.C. 40102.

[7] The Commission does not seek comment on the ocean freight forwarder bills, as ocean freight forwarders, although ocean transportation intermediaries, are not common carriers. 46 U.S.C. 40102.

[8] *See* 85 FR at 29662. Publicly available MTO schedules are, however, enforceable as implied contracts without proof of actual knowledge of the schedule's provisions. 46 U.S.C. 40501(f).

[9] *See* 46 CFR 535.309.

Commission stated that its focus in that rulemaking was ''on practices related to charges imposed by regulated entities on shippers, intermediaries, and truckers, and not the contractual relationships between ocean carriers and marine terminal operators.'' [10] There are some situations, however, where marine terminal operators do impose fees directly on shippers. The Commission thus seeks comments on where marine terminal operators impose fees directly on shippers, as well as whether and to what extent a proposed regulation on demurrage and detention billings should include MTOs.

The Commission is also aware that common carriers and marine terminal operators are subject to laws other than the Shipping Act, as well as private contractual arrangements such as the Uniform Intermodal Interchange Agreement (UIIA), which may implicate demurrage and detention billing. For instance, as the Commission noted in the Interpretive Rule, the standard UIIA agreement contains deadlines for equipment providers (*e.g.,* VOCCs) to invoice truckers for containers and chassis.[11] The Commission seeks comment on any other laws, regulations, or arrangements that may affect the regulation of demurrage and detention billing.

B. Minimum Billing Information

The Commission is considering a requirement that bills for demurrage and detention charges contain certain minimum information. Although much of the information required may currently be included on bills already, certain additional information may be useful to ensure the accuracy, clarity, and visibility of charges, including identifying whether the bill is being issued to the correct party, identifying the appropriate time period for which demurrage and detention charges are being assessed, providing more concise information in the event a bill is disputed, and including information on how to access the dispute resolution process. Requiring such information may ultimately lead to fewer disputed bills and therefore streamline the demurrage and detention billing process.

Accordingly, the Commission is requesting comments on what specific information it should require on demurrage and detention bills. In addition to information necessary to identify the shipment (bill of lading number, container number, etc.), the Commission is also requesting comments on whether bills should include information on how the charges are calculated. This could include, for example, identifying clear and concise container availability dates in addition to vessel arrival dates for import shipments; and, for export shipments, the earliest return dates (and any modifications to those dates) as well as the availability of return locations and appointments, where applicable. In addition, the Commission is requesting comments on whether the bills should include information on any events (*e.g.,* container unavailability, lack of return locations, appointments, or other force-majeure reasons) which would justify stopping the clock on charges. Finally, since anecdotal reports indicate that bills may sometimes be sent to multiple parties for the same shipments, the Commission is seeking comment on whether it would be appropriate to require bills to specify all parties receiving the bill as well as to identify why the party receiving the bill is the proper party-in-interest and to identify the source of the charge (*i.e.,* by tariff, service contract or MTO schedule).

C. Billing Practices

The Commission is also considering requiring common carriers and MTOs to adhere to certain practices regarding the timing of demurrage and detention billings. The Commission is also interested in comments on whether similar requirements should be placed on the issuance of refunds.

The Commission has previously received concerns from stakeholders regarding a lack of clearly defined timeframes for the issuance of bills.[12] In response to the proposed rule on Interpretive Rule on Demurrage and Detention, the Commission received many comments asserting that ocean carriers and marine terminal operators should issue demurrage or detention bills within specific timeframes.[13] In the Final Rule, the Commission determined not to take action, reserving the right to reconsider the issue on potential billing and invoice timeframes.[14]

However, the Commission has continued to receive anecdotal examples of delays in receiving demurrage or detention bills. The longer it takes to receive a demurrage or detention bill the more difficult it may be for a shipper to validate the accuracy of the charges. For example, if a shipper receives a demurrage or detention bill months after the occurrence of the charge, they may no longer possess the necessary materials to confirm the charges are correct or to access the information necessary to dispute the charges.

The Commission is asking for comments on a requirement that demurrage or detention bills be issued within 60 days of the occurrence of the charge. The UIIA currently requires that invoices be issued within 60 days.[15] The Commission is interested in the effectiveness of that UIIA timeframe and if a longer or shorter timeline would be appropriate.

The Commission is also seeking comments on whether similar timing requirements in the context of refunds would be beneficial. Again, the Commission has received anecdotal examples of refunds of demurrage and detention billings taking several months to be issued. The Commission is seeking comments on whether it should regulate the timeframe for refunds and what the timeframe should be.

IV. Information Requested

Your responses to the following questions will help inform the Commission whether rulemaking or other Commission action is necessary. In responding to each question, please identify the question to which you are responding and explain your answer to each question. Additionally, please consider the type of information that VOCCs, NVOCCs, and MTOs currently provide with demurrage and detention bills, current demurrage and detention billing practices, and any relevant distinctions that should be made between VOCCs, NVOCCs, and MTOs with respect to billing information and practices. If your response to a question includes a monetary or numerical figure, please provide sufficient information and data to explain how the figure was calculated. Comments may also include any supplemental information relevant to billing requirements.

A. Scope.

1. Should the Commission include both VOCCs and NVOCCs in a proposed regulation on demurrage and detention billing?

[10] 85 FR at 29650.

[11] *See, e.g.,* 85 FR 29662 n. 388.

[12] *See* Fact Finding Investigation No. 28 Final Report, at 14 *https://www2.fmc.gov/readingroom/docs/FF%20No.%2028/FF-28_FR.pdf/.*

[13] 85 FR 29638 at 29662.

[14] 85 FR 29638 at 29662.

[15] ''Provider shall invoice Motor Carrier for Per Diem, Container Use, Chassis Use/Rental and/or Storage/Ocean Demurrage charges within sixty (60) days from the date on which Equipment was returned to Provider by Motor Carrier. If Motor Carrier is not invoiced within the established timeframe, the right of the Provider to recover such charges will be lost.'' Uniform Intermodal Interchange and Facilities Access Agreement (''UIIA'') at Section E.6(c). *https://www.uiia.org/sites/default/files/documents/newuiia-Home.pdf.*

2. Should the Commission include MTOs in a proposed demurrage billing regulation?

3. Should a proposed demurrage billing regulation distinguish between the demurrage MTOs charge to shippers and the demurrage MTOs charge to VOCCs? That is, should the Commission regulate the format in which MTOs bill VOCCs?

4. What percentage of demurrage and detention bills contain inaccurate information, and which information is most often disputed?

5. How much does the type of information included on or with demurrage and detention billings vary among common carriers, among marine terminal operators, and between VOCCs and NVOCCs?

B. Minimum billing information.

6. What type of information should be required on billings. Should the Commission require certain essential information included on invoices such as:

a. Bill of lading number
b. Container number
c. Billing date
d. Payment due date
e. Start/end of free time
f. Start/end of demurrage/detention/per diem clock
g. Demurrage/detention/per diem rate schedule
h. Location of the notice of the charge (*i.e.,* tariff, service contract number and section or MTO schedule)
i. For import shipments:
i. Vessel arrival date
ii. Container availability date
j. For export shipments:
i. Earliest return date, including identifying any modifications to the earliest return date
k. Any intervening clock-stopping events, for example:
i. Unavailability of container
ii. Unavailability of pickup or return locations
iii. Unavailability of appointments (where applicable)
iv. Restrictions on chassis accepted
v. Force majeure-related events
l. Please note if any portion of the charge is a pass-through of charges levied by the MTO or Port.

C. Billing practices.

7. What information or timeframes should be required for VOCC and NVOCC demurrage and detention bills? Should the Commission require different types of information or timeframes?

8. Do common carriers invoice multiple parties for demurrage and/or detention charges? If multiple parties are invoiced for charges, should the billing party be required to identify all such parties receiving an invoice for the charges at issue?

9. Should the billing party be required to identify the basis of why the invoiced party is the proper party in interest and therefore liable for the charges? (*i.e.,* as shipper, consignee, beneficial cargo owner, motor carrier or an agent, or as a party acting on behalf of another party pursuant to the common carrier's merchant clause in its bill of lading.)

10. Should the Commission, for purposes of clarity and visibility of charges, require MTOs to bill demurrage directly to shippers (rather than billing VOCCs who then bill shippers for demurrage)? In that scenario, MTOs would bill shippers directly for demurrage, and carriers would continue to bill detention to shippers.

11. How long from the point of accrual of a demurrage or detention charge does it typically take to receive a demurrage or detention invoice or billing?

12. Should the Commission require demurrage and detention invoices to be issued within 60 days of date when the detention/demurrage/per diem stops accruing?

13. Should the Commission require specific information be included on the invoice regarding how to dispute a charge? If so, what information should be required? For example, should the Commission require invoices to include contact information for disputing charges, identify circumstances for when a charge may be waived, or identify the billing parties' evidentiary requirements sufficient to support a waiver of the charges?

14. How long from the point of dismissal of a charge does it typically take to receive a refund? Should the Commission require that refunds of demurrage or detention bills be issued within a certain time period and what should that timeframe be?

15. How would a regulation on demurrage and detention billing requirements impact, conflict with, or preempt any other applicable laws, regulations, or arrangements (such as the UIIA)?

16. Please provide any other views or data you believe would help inform the Commission's decision whether to pursue a proposed regulation on demurrage and detention billing information and practices.

By the Commission.

William Cody,

Secretary.

[FR Doc. 2022–02981 Filed 2–14–22; 8:45 am]

BILLING CODE 6730–02–P

FEDERAL COMMUNICATIONS COMMISSION

47 CFR Part 73

[MB Docket No. 22–39; RM–11917; DA 22–87; FR ID 71247]

Television Broadcasting Services; Billings, Montana; Correction

AGENCY: Federal Communications Commission.

ACTION: Proposed rule; correction.

SUMMARY: The Federal Communications Commission published a document in the **Federal Register** of February 4, 2022, concerning a petition for rulemaking filed by Scripps Broadcasting Holdings LLC, licensee of KTVQ(TV), channel 10, Billings, Montana, requesting the substitution of channel 20 for channel 10 in the Table of Allotments. The document contained the incorrect call sign of the licensee. The document also contained an incorrect licensee name.

DATES: February 15, 2022.

FOR FURTHER INFORMATION CONTACT: Joyce Bernstein, Media Bureau, at (202) 418–1647 or *Joyce.Bernstein@fcc.gov.*

SUPPLEMENTARY INFORMATION:

Correction

In FR Doc. 2022–02337, in the **Federal Register** of February 4, 2022, appearing on page 6473, in the third column, correct the first sentence in the **SUMMARY** caption to read:

SUMMARY: The Federal Communications Commission (Commission) has before it a petition for rulemaking filed by Scripps Broadcasting Holdings LLC (Petitioner), the licensee of KTVQ(TV), channel 10, Billings, Montana.

Dated: February 7, 2022.

Thomas Horan,

Chief of Staff, Media Bureau.

[FR Doc. 2022–03069 Filed 2–14–22; 8:45 am]

BILLING CODE 6712–01–P

DEPARTMENT OF THE INTERIOR

Fish and Wildlife Service

50 CFR Part 17

[Docket No. FWS–R2–ES–2021–0041; FF09E21000; FXES1111090FEDR 223]

RIN 1018–BE65

Endangered and Threatened Wildlife and Plants; Endangered Species for Prostrate Milkweed and Designation of Critical Habitat

AGENCY: Fish and Wildlife Service, Interior.

ACTION: Proposed rule.

SUMMARY: We, the U.S. Fish and Wildlife Service (Service), propose to list the prostrate milkweed (*Asclepias prostrata*), a plant species from Texas, as an endangered species and designate critical habitat under the Endangered Species Act of 1973, as amended (Act). This determination also serves as our 12-month finding on a petition to list the prostrate milkweed. After a review of the best available scientific and commercial information, we find that listing the species is warranted. Accordingly, we propose to list the prostrate milkweed as an endangered species. If we finalize this rule as proposed, it would add this species to the List of Endangered and Threatened Plants and extend the Act's protections to the species. We also propose to designate critical habitat for the prostrate milkweed under the Act. In total, approximately 691.3 acres (279.8 hectares) in Starr and Zapata Counties, Texas, fall within the boundaries of the proposed critical habitat designation. We also announce the availability of a draft economic analysis of the proposed designation of critical habitat for prostrate milkweed.

DATES: We will accept comments received or postmarked on or before April 18, 2022. Comments submitted electronically using the Federal eRulemaking Portal (see **ADDRESSES**, below) must be received by 11:59 p.m. Eastern Time on the closing date. We must receive requests for a public hearing, in writing, at the address shown in **FOR FURTHER INFORMATION CONTACT** by April 1, 2022.

ADDRESSES: You may submit comments by one of the following methods:

(1) *Electronically:* Go to the Federal eRulemaking Portal: *https://www.regulations.gov.* In the Search box, enter the docket number or RIN for this rulemaking (presented above in the document headings). For best results, do not copy and paste either number; instead, type the docket number or RIN into the Search box using hyphens. Then, click on the Search button. On the resulting page, in the panel on the left side of the screen, under the Document Type heading, check the Proposed Rule box to locate this document. You may submit a comment by clicking on ''Comment.''

(2) *By hard copy:* Submit by U.S. mail to: Public Comments Processing, Attn: FWS–R2–ES–2021–0041, U.S. Fish and Wildlife Service, MS: PRB/3W, 5275 Leesburg Pike, Falls Church, VA 22041–3803.

We request that you send comments only by the methods described above. We will post all comments on *https://www.regulations.gov.* This generally means that we will post any personal information you provide us (see Information Requested, below, for more information).

Availability of supporting materials: The species status assessment report and the draft economic analysis are available at *https://www.regulations.gov* under Docket No. FWS–R2–ES–2021–0041. For the critical habitat designation, the coordinates or plot points or both from which the maps are generated are included in the decision file and are available at *https://www.fws.gov/southwest/es/TexasCoastal/,* at *https://www.regulations.gov* under Docket No. FWS–R2–ES–2021–0041, and at the Texas Coastal Ecological Services Field Office (see **FOR FURTHER INFORMATION CONTACT**). Any additional tools or supporting information that we may develop for the critical habitat designation will also be available at the Service website and field office set out above and may also be included in this preamble and/or at *https://www.regulations.gov.*

FOR FURTHER INFORMATION CONTACT: Chuck Ardizzone, Field Supervisor, Texas Coastal Ecological Services Field Office, 17629 El Camino Real, Suite 211, Houston, TX 77058; telephone 281–286–8282. Persons who use a telecommunications device for the deaf (TDD) may call the Federal Relay Service at 800–877–8339.

SUPPLEMENTARY INFORMATION:

Executive Summary

Why we need to publish a rule. Under the Act, if we determine that a species warrants listing, we are required to promptly publish a proposal in the **Federal Register**, unless doing so is precluded by higher-priority actions and expeditious progress is being made to add and remove qualified species to or from the List of Endangered and Threatened Wildlife and Plants. The Service will make a determination on our proposal within 1 year. If there is substantial disagreement regarding the sufficiency and accuracy of the available data relevant to the proposed listing, we may extend the final determination for not more than six months. To the maximum extent prudent and determinable, we must designate critical habitat for any species that we determine to be an endangered or threatened species under the Act. Listing a species as an endangered or threatened species and designation of critical habitat can only be completed by issuing a rule.

What this document does. We propose to list the prostrate milkweed as an endangered species under the Act, and we propose the designation of critical habitat for the species.

The basis for our action. Under the Act, we may determine that a species is an endangered or threatened species because of any of five factors: (A) The present or threatened destruction, modification, or curtailment of its habitat or range; (B) overutilization for commercial, recreational, scientific, or educational purposes; (C) disease or predation; (D) the inadequacy of existing regulatory mechanisms; or (E) other natural or manmade factors affecting its continued existence. We have determined that competition from introduced invasive grass; habitat loss and degradations from root-plowing and conversion of native vegetation to improved buffelgrass pasture; habitat loss from right of way (ROW) construction and maintenance from energy development and road and utility construction; habitat loss from border security development and enforcement activities (Factor A); and the demographic and genetic consequences of small population sizes (Factor E) are threats to the prostrate milkweed.

Section 4(a)(3) of the Act requires the Secretary of the Interior (Secretary) to designate critical habitat concurrent with listing to the maximum extent prudent and determinable. Section 3(5)(A) of the Act defines critical habitat as: (i) The specific areas within the geographical area occupied by the species, at the time it is listed, on which are found those physical or biological features (I) essential to the conservation of the species and (II) which may require special management considerations or protections; and (ii) specific areas outside the geographical area occupied by the species at the time it is listed, upon a determination by the Secretary that such areas are essential for the conservation of the species. Section 4(b)(2) of the Act states that the Secretary must make the designation on the basis of the best scientific data available and after taking into consideration the economic impact, the impact on national security, and any other relevant impacts of specifying any particular area as critical habitat.

Information Requested

We intend that any final action resulting from this proposed rule will be based on the best scientific and commercial data available and be as accurate and as effective as possible. Therefore, we request comments or information from other governmental

agencies, Native American Tribes, the scientific community, industry, or any other interested parties concerning this proposed rule.

We particularly seek comments concerning:

(1) The species' biology, range, and population trends, including:

(a) Biological or ecological requirements of the species, including habitat requirements for feeding, breeding, and sheltering;

(b) Genetics and taxonomy;

(c) Historical and current range, including distribution patterns;

(d) Historical and current population levels, and current and projected trends; and

(e) Past and ongoing conservation measures for the species, its habitat, or both.

(2) Factors that may affect the continued existence of the species, which may include habitat modification or destruction, overutilization, disease, predation, the inadequacy of existing regulatory mechanisms, or other natural or manmade factors.

(3) Biological, commercial trade, or other relevant data concerning any threats (or lack thereof) to this species and existing regulations that may be addressing those threats.

(4) Additional information concerning the historical and current status, range, distribution, and population size of this species, including the locations of any additional populations of this species.

(5) The reasons why we should or should not designate habitat as ''critical habitat'' under section 4 of the Act (16 U.S.C. 1531 *et seq.*), including information to inform the following factors that the regulations identify as reasons why designation of critical habitat may be not prudent:

(a) The species is threatened by taking or other human activity and identification of critical habitat can be expected to increase the degree of such threat to the species;

(b) The present or threatened destruction, modification, or curtailment of a species' habitat or range is not a threat to the species, or threats to the species' habitat stem solely from causes that cannot be addressed through management actions resulting from consultations under section 7(a)(2) of the Act;

(c) Areas within the jurisdiction of the United States provide no more than negligible conservation value, if any, for a species occurring primarily outside the jurisdiction of the United States; or

(d) No areas meet the definition of critical habitat.

(6) Specific information on:

(a) The amount and distribution of prostrate milkweed habitat;

(b) What areas, that are occupied at the time of listing and that contain the physical or biological features essential to the conservation of the species, should be included in the designation and why;

(c) Any additional areas occurring within the range of the species, including Starr and Zapata Counties, Texas, that should be included in the designation because they (1) are occupied at the time of listing and contain the physical or biological features that are essential to the conservation of the species and that may require special management considerations, or (2) are unoccupied at the time of listing and are essential for the conservation of the species;

(d) Special management considerations or protection that may be needed in critical habitat areas we are proposing, including managing for the potential effects of climate change; and

(e) What areas not occupied at the time of listing are essential for the conservation of the species. We particularly seek comments:

(i) Regarding whether occupied areas are adequate for the conservation of the species;

(ii) Providing specific information regarding whether or not unoccupied areas would, with reasonable certainty, contribute to the conservation of the species and contain at least one physical or biological feature essential to the conservation of the species; and

(iii) Explaining whether or not unoccupied areas fall within the definition of ''habitat'' at 50 CFR 424.02 and why.

(7) Land use designations and current or planned activities in the subject areas and their possible impacts on proposed critical habitat.

(8) Any probable economic, national security, or other relevant impacts of designating any area that may be included in the final designation, and the related benefits of including or excluding specific areas.

(9) Information on the extent to which the description of probable economic impacts in the draft economic analysis is a reasonable estimate of the likely economic impacts and any additional information regarding probable economic impacts that we should consider.

(10) Whether any specific areas we are proposing for critical habitat designation should be considered for exclusion under section 4(b)(2) of the Act, and whether the benefits of potentially excluding any specific area outweigh the benefits of including that area under section 4(b)(2) of the Act, in particular for the critical habitat units on privately owned lands. If you think we should exclude any additional areas, please provide credible information regarding the existence of a meaningful economic or other relevant impact supporting a benefit of exclusion.

(11) Whether we could improve or modify our approach to designating critical habitat in any way to provide for greater public participation and understanding, or to better accommodate public concerns and comments.

Please include sufficient information with your submission (such as scientific journal articles or other publications) to allow us to verify any scientific or commercial information you include.

Please note that submissions merely stating support for, or opposition to, the action under consideration without providing supporting information, although noted, will not be considered in making a determination, as section 4(b)(1)(A) of the Act directs that determinations as to whether any species is an endangered or a threatened species must be made ''solely on the basis of the best scientific and commercial data available.''

You may submit your comments and materials concerning this proposed rule by one of the methods listed in **ADDRESSES**. We request that you send comments only by the methods described in **ADDRESSES**.

If you submit information via *https://www.regulations.gov,* your entire submission—including any personal identifying information—will be posted on the website. If your submission is made via a hardcopy that includes personal identifying information, you may request at the top of your document that we withhold this information from public review. However, we cannot guarantee that we will be able to do so. We will post all hardcopy submissions on *https://www.regulations.gov.*

Comments and materials we receive, as well as supporting documentation we used in preparing this proposed rule, will be available for public inspection on *https://www.regulations.gov.*

Because we will consider all comments and information we receive during the comment period, our final determinations may differ from this proposal. Based on the new information we receive (and any comments on that new information), we may conclude that the species is threatened instead of endangered, or we may conclude that the species does not warrant listing as either an endangered species or a threatened species. For critical habitat, our final designation may not include all areas proposed, may include some additional areas that meet the definition

of critical habitat, and may exclude some areas if we find the benefits of exclusion outweigh the benefits of inclusion.

Public Hearing

Section 4(b)(5) of the Act provides for a public hearing on this proposal, if requested. Requests must be received by the date specified in **DATES**. Such requests must be sent to the address shown in **FOR FURTHER INFORMATION CONTACT**. We will schedule a public hearing on this proposal, if requested, and announce the date, time, and place of the hearing, as well as how to obtain reasonable accommodations, in the **Federal Register** and local newspapers at least 15 days before the hearing. For the immediate future, we will provide these public hearings using webinars that will be announced on the Service's website, in addition to the **Federal Register**. The use of these virtual public hearings is consistent with our regulations at 50 CFR 424.16(c)(3).

Previous Federal Actions

On June 25, 2007, we received a petition, dated June 18, 2007, from Forest Guardians (now WildEarth Guardians) that included the prostrate milkweed. On December 16, 2009, we published a 90-day finding (74 FR 66866) that the petition presented substantial information that prostrate milkweed may be warranted for listing. At that time, we initiated a status review of the species.

Supporting Documents

A species status assessment (SSA) team prepared an SSA report for the prostrate milkweed. The SSA team was composed of Service biologists, in consultation with other species experts. The SSA report represents a compilation of the best scientific and commercial data available concerning the status of the species, including the impacts of past, present, and future factors (both negative and beneficial) affecting the species. In accordance with our joint policy on peer review published in the **Federal Register** on July 1, 1994 (59 FR 34270), and our August 22, 2016, memorandum updating and clarifying the role of peer review of listing actions under the Act, we sought the expert opinions of six appropriate specialists regarding the SSA report. The Service received two responses. The Service also sent the SSA report to one partner, a botanist from the Texas Parks and Wildlife Department, and received a review from this partner.

I. Proposed Listing Determination

Background

A thorough review of the taxonomy, life history, and ecology of the prostrate milkweed (*Asclepias prostrata*) is presented in the SSA report (Service 2020, entire). Prostrate milkweed is an herbaceous, flowering plant in the Apocynaceae (dogbane) family. It is native to Texas, USA, and Tamaulipas and eastern Nuevo León, Mexico.

Prostrate milkweed is a perennial species with cream, yellow, greenish, or pinkish flowers (Blackwell 1964, p. 178). This species is distinctive in its prostrate habit; the leaves and stems sprawl outward along the surface of the ground. It is found in open spaces with full sun, and with little to no competition from surrounding plants (Poole and Janssen 1997, p. 117). It occurs in a subtropical, semiarid climate in sparsely vegetated habitats, including grasslands, savannas, and open areas of the Tamaulipan shrubland ecological region, on level or gently sloping uplands (Singhurst *et al.* 2015, p. 25; Carr 2011, pp. 37–38; Damude and Poole 1990, p. 13; Strong and Williamson 2015, p. 36). Prostrate milkweed occurs primarily in deep, loose, sandy soils formed over sandstone or indurated caliche (hardened soil layer cemented by calcium and magnesium carbonates) (Carr 2011, pp. 37–38; Strong and Williamson 2015, p. 36).

Like all milkweeds, prostrate milkweed flowers have a unique and complex structure and pollination system. Pollinators are attracted to the copious nectar produced deep within the flower. To reach the nectar, insects of a particular size are forced against the flower's central stalk in such a way that pollinia, which are sack-like structures full of pollen grains, adhere to their legs. When the insect visits another flower of the same species, the pollinia are often wedged against the stigma (the receptive female structure) and detach, thus delivering a large load of pollen and effecting fertilization. The closely-related zizotes milkweed, *Asclepias oenotheroides,* is effectively pollinated by very large wasps called tarantula hawks (species of *Pepsis* and *Hemipepsis*), and it is likely that these wasps and large bees also pollinate prostrate milkweed. Due to their relatively large size and the abundance of nectar produced by the flowers, these pollinators are able to fly relatively large distances between nectar sources (Gathman and Tscharntke 2002, entire; Greenleaf *et al.* 2007, entire). Hence, it is likely that prostrate milkweed can reproduce even when individuals are widely distributed at very low densities, due to the uniquely effective pollination system, large nectar reward, and large forage range of its pollinators.

Fertilized flowers of prostrate milkweed produce capsules with about 100 seeds each. The seeds have long, silky, white hairs and are dispersed by wind (Damude and Poole 1990, pp. 4–5; Richardson and King 2011, p. 76). Seed production of milkweeds is often resource limited (La Rosa and Conner 2017, p. 151); resources for prostrate milkweed include rainfall, pollinators, and open, sparsely vegetated habitat.

Prostrate milkweed remains as tubers, up to 12 inches (in) (30 centimeters (cm)) underground that are dormant during long droughts. New stems are stimulated to emerge from the soil by infrequent, heavy rainfall, and set seed following wildfire or, historically, a passing herd of bison has cleared competing grasses and forbs, and the deluges of tropical storms briefly replenish moisture. The species exists where competition from other plants is periodically reduced by wildfire or grazing. These life-history traits allow the species to rebound after periods of inhospitable conditions, and well-managed livestock grazing, which simulates the effects of bison, and rangeland management, including brush thinning and prescribed burning, can return an unsuitable area to conditions more suitable for prostrate milkweed. As a result, sufficiently resilient prostrate milkweed populations may be maintained on well-managed rangelands. Livestock grazing is the primary economic use of privately-owned land throughout the range of prostrate milkweed in Texas and northeast Mexico, although the management regime of these rangelands is unknown. This adaptation also enables prostrate milkweed to occur along mowed road rights-of-way (ROWs) and in rangelands where soils are intact. Therefore, while there may be prostrate milkweed populations on these rangelands, we do not have evidence that they are present, nor do we have information that the grazing is managed in such a way as to promote resilient populations. However, it is unlikely to remain where soils are disturbed by plowing, bulldozing, or road grading because this destroys the tubers, preventing any plant regrowth.

In the United States, prostrate milkweed occurs in south Texas from northwest Zapata County to the vicinity of Roma, in Starr County. All known U.S. populations are within 8 miles of the Rio Grande (Strong and Williamson 2015, pp. 34–35). In Mexico, known locations for this species occur in

isolated pockets widely scattered in northern Tamaulipas and eastern Nuevo León, many over 100 miles (mi) (160 kilometers (km)) from the Rio Grande (Strong and Williamson 2015, p. 35). The historical range of prostrate milkweed is unknown; therefore, it is presumed to be approximately the same as the current range in southern Texas and northern Mexico. However, the distribution of populations throughout this range may have been more abundant in the past.

Regulatory and Analytical Framework

Regulatory Framework

Section 4 of the Act (16 U.S.C. 1533) and its implementing regulations (50 CFR part 424) set forth the procedures for determining whether a species is an endangered species or a threatened species. The Act defines an endangered species as a species that is ''in danger of extinction throughout all or a significant portion of its range,'' and a threatened species as a species that is ''likely to become an endangered species within the foreseeable future throughout all or a significant portion of its range.'' The Act requires that we determine whether any species is an endangered species or a threatened species because of any of the following factors:

(A) The present or threatened destruction, modification, or curtailment of its habitat or range;
(B) Overutilization for commercial, recreational, scientific, or educational purposes;
(C) Disease or predation;
(D) The inadequacy of existing regulatory mechanisms; or
(E) Other natural or manmade factors affecting its continued existence.

These factors represent broad categories of natural or human-caused actions or conditions that could have an effect on a species' continued existence. In evaluating these actions and conditions, we look for those that may have a negative effect on individuals of the species, as well as other actions or conditions that may ameliorate any negative effects or may have positive effects.

We use the term ''threat'' to refer in general to actions or conditions that are known to or are reasonably likely to negatively affect individuals of a species. The term ''threat'' includes actions or conditions that have a direct impact on individuals (direct impacts), as well as those that affect individuals through alteration of their habitat or required resources (stressors). The term ''threat'' may encompass—either together or separately—the source of the action or condition or the action or condition itself.

However, the mere identification of any threat(s) does not necessarily mean that the species meets the statutory definition of an ''endangered species'' or a ''threatened species.'' In determining whether a species meets either definition, we must evaluate all identified threats by considering the expected response by the species, and the effects of the threats—in light of those actions and conditions that will ameliorate the threats—on an individual, population, and species level. We evaluate each threat and its expected effects on the species, then analyze the cumulative effect of all of the threats on the species as a whole. We also consider the cumulative effect of the threats in light of those actions and conditions that will have positive effects on the species, such as any existing regulatory mechanisms or conservation efforts. The Secretary determines whether the species meets the definition of an ''endangered species'' or a ''threatened species'' only after conducting this cumulative analysis and describing the expected effect on the species now and in the foreseeable future.

The Act does not define the term ''foreseeable future,'' which appears in the statutory definition of ''threatened species.'' Our implementing regulations at 50 CFR 424.11(d) set forth a framework for evaluating the foreseeable future on a case-by-case basis. The term ''foreseeable future'' extends only so far into the future as the Service can reasonably determine that both the future threats and the species' responses to those threats are likely. In other words, the foreseeable future is the period of time in which we can make reliable predictions. ''Reliable'' does not mean ''certain''; it means sufficient to provide a reasonable degree of confidence in the prediction. Thus, a prediction is reliable if it is reasonable to depend on it when making decisions.

It is not always possible or necessary to define foreseeable future as a particular number of years. Analysis of the foreseeable future uses the best scientific and commercial data available and should consider the timeframes applicable to the relevant threats and to the species' likely responses to those threats in view of its life-history characteristics. Data that are typically relevant to assessing the species' biological response include species-specific factors such as lifespan, reproductive rates or productivity, certain behaviors, and other demographic factors.

Analytical Framework

The SSA report documents the results of our comprehensive biological review of the best scientific and commercial data regarding the status of the species, including an assessment of the potential threats to the species. The SSA report does not represent a decision by the Service on whether the species should be proposed for listing as an endangered or threatened species under the Act. However, it does provide the scientific basis that informs our regulatory decisions, which involve the further application of standards within the Act and its implementing regulations and policies. The following is a summary of the key results and conclusions from the SSA report; the full SSA report can be found at Docket FWS–R2–ES–2021–0041 on *https://www.regulations.gov* and at *https://www.fws.gov/southwest/es/TexasCoastal/*.

To assess prostrate milkweed viability, we used the three conservation biology principles of resiliency, redundancy, and representation (Shaffer and Stein 2000, pp. 306–310). Briefly, resiliency supports the ability of the species to withstand environmental and demographic stochasticity (for example, wet or dry, warm or cold years), redundancy supports the ability of the species to withstand catastrophic events (for example, droughts, large pollution events), and representation supports the ability of the species to adapt over time to long-term changes in the environment (for example, climate changes). In general, the more resilient and redundant a species is and the more representation it has, the more likely it is to sustain populations over time, even under changing environmental conditions. Using these principles, we identified the species' ecological requirements for survival and reproduction at the individual, population, and species levels, and described the beneficial and risk factors influencing the species' viability.

The SSA process can be categorized into three sequential stages. During the first stage, we evaluated the individual species' life-history needs. The next stage involved an assessment of the historical and current condition of the species' demographics and habitat characteristics, including an explanation of how the species arrived at its current condition. The final stage of the SSA involved making predictions about the species' responses to positive and negative environmental and anthropogenic influences. Throughout all of these stages, we used the best available information to characterize viability as the ability of a species to

sustain populations in the wild over time. We use this information to inform our regulatory decision.

Summary of Biological Status and Threats

In this discussion, we review the biological condition of the species and its resources, and the threats that influence the species' current and future condition, in order to assess the species' overall viability and the risks to that viability.

For the prostrate milkweed to maintain viability, its populations or some portion thereof must have sufficient resiliency, redundancy, and representation. Several factors influence the resiliency of prostrate milkweed populations, including abundance and recruitment rate, in addition to elements of the species' habitat that determine whether prostrate milkweed populations can grow. These resiliency factors and habitat elements are discussed in detail in the SSA report and summarized here.

Species Needs

Abundance—Prostrate milkweed abundance is difficult to assess due to its ability to remain dormant for multiple years until the necessary environmental conditions occur. Individual plants may emerge only a few times per decade, and not all plants will emerge at the same time (Price 2005, pers. comm.; Best 2017, pers. comm.). Therefore, we considered populations to be extant if plants have been observed within the past 40 years (Hammerson *et al.* 2008, entire; Strong 2020, pers. comm.) and with available habitat (*i.e.,* not paved over) or with restorable habitat (*i.e.,* nonnative grass could be removed).

Populations of prostrate milkweed must be large enough to have a high probability of enduring random demographic and environmental variation. For example, species or populations may be classified as vulnerable when the probability of persisting 100 years is less than 90 percent (Mace and Lande 1991, p. 151). This metric of population resilience, called minimum viable population (MVP), refers to the smallest population size that has a high probability of surviving over a specified period of time. Calculations of MVP require data that are not currently available for prostrate milkweed. As a practical alternative, we estimated the likely MVP range of prostrate milkweed by comparing it to species with similar life-history traits for which MVPs have been calculated (Pavlik 1996, p. 137). This method estimates a highly resilient population of prostrate milkweed has 1,600 or more adult individuals (Service 2020, p. 38).

Determinations of MVP usually consider the effective population size, rather than total number of individuals (Pavlik 1996, entire); 10 genetically identical individuals (for example, clones or ramets) would have an effective population size of one. Because prostrate milkweed is likely self-incompatible and does not appear to form clonal colonies, the effective population size is likely to be nearly the same as the total population size.

Recruitment Rate—A stable or increasing population requires recruitment rates that equal or exceed mortality rates (Service 2020, p. 38). All stages of recruitment, from flowering and seed production to germination and establishment, occur when the soil has available moisture. The porous soils of prostrate milkweed habitat dry quickly after a single heavy thunderstorm. Based on observations of other perennial forbs in this ecosystem, recruitment probably occurs during periods of extended rainfall, meaning multiple rain events over a period of several weeks (Service 2020, p. 38). These events are rare in this semiarid region. Consequently, we expect that successful recruitment may occur only once or a few times per decade. Similarly, most mortality probably occurs during years of extended drought. Hence, both recruitment and mortality would have strong pulses and observed population sizes would vary widely from year to year, leading to potentially spurious interpretations of demographic trends (Service 2020, p. 38).

Populations of prostrate milkweed require habitats that also support healthy populations of large native bees and wasps (Service 2020, p. 38). Native bees in turn require a diversity and abundance of native forb and shrub species that provide pollen and nectar. Tarantula hawks (*Pepsis* spp. and *Hemipepsis* spp.) may also be important pollinators of prostrate milkweed; tarantula hawks require healthy populations of their prey species, tarantulas (Best 2020, pers. comm.).

Prostrate milkweed populations require competition from grasses and forbs to be periodically reduced (Service 2020, p. 38). This requirement, which has been observed in other milkweed species, may be an adaptation to wildfire (Baum and Sharber 2012, pp. 968–971). Although mowing or livestock grazing can also reduce competition, it is likely that prostrate milkweed is adapted to grasslands that were sustained by periodic wildfires (Service 2020, p. 39).

Canopy Cover—Canopy cover refers to shade from trees, shrubs, prickly pear cactuses, or tall (>1 meter (m)) grass. Resilient prostrate milkweed populations need an open canopy with little or no herbaceous cover (Service 2020, p. 3). Therefore, the species may occur in areas that mimic historical wildfire or grazing, such as along mowed road rights-of-way (Service 2020, p. 3).

Ground Cover—Ground cover refers to vegetation growing at the herbaceous layer (approximately <1 m) that would compete with prostrate milkweed plants for resources. Resilient prostrate milkweed populations need an open canopy with little or no herbaceous cover, so there is little competition with other plants (Service 2020, p. 3).

Risk Factors for Prostrate Milkweed

We reviewed the potential risk factors (*i.e.,* threats, stressors) that may affect prostrate milkweed now and in the future. In this proposed rule, we will discuss only those factors in detail that could meaningfully impact the status of the species. Those risks that are not known to have effects on prostrate milkweed populations, such as quarrying/mining, hybridization, pollinator decline, and climate change, are not discussed here but are evaluated in the SSA report. The primary risk factors (*i.e.,* threats) affecting the status of prostrate milkweed are: (1) Competition from introduced invasive grasses (Factor A from the Act); (2) habitat loss from root-plowing and conversion of native vegetation to pasture (Factor A); (3) habitat loss from ROW construction and maintenance from energy development and road and utility construction (Factor A); (4) habitat loss from border security development and enforcement activities (Factor A); and (5) the demographic and genetic consequences of small population sizes and population fragmentation (Factor E).

Competition From Nonnative Invasive Grasses

Nonnative invasive grass species displace native plants by competing for water, nutrients, and light, and their dense root systems prevent germination of native plant seeds (Texas Invasives 2019, unpaginated). Buffelgrass (*Pennisetum ciliare*) is a perennial bunchgrass introduced from Africa that is now one of the most abundant introduced grasses in south Texas, and the most prevalent invasive grass within the range of prostrate milkweed. Since the 1950s, Federal and State land management agencies have promoted buffelgrass as a forage grass in south

Texas (Smith 2010, p. 113). Buffelgrass is very well-adapted to the hot, semi-arid climate of south Texas due to its drought resistance and ability to aggressively establish in heavily grazed landscapes (Smith 2010, p. 113). Buffelgrass continues to be planted in areas affected by drought and overgrazing to stabilize soils and to increase rangeland productivity. Buffelgrass often creates homogeneous monocultures by out-competing native plants for essential resources (Lyons *et al.* 2013, p. 8), and it produces phytotoxins in the soil that inhibit the growth of neighboring native plants (Vo 2013, unpaginated). Furthermore, prescribed burning used for brush control promotes buffelgrass forage production in south Texas (Hamilton and Scifres 1982, p. 11).

Most prostrate milkweed plants have been observed where buffelgrass is absent or at low densities (Eason 2019, pers. comm.; Strong 2019, pers. comm.). On national wildlife refuge lands, prostrate milkweed was found in areas where native grass was still dominant, but not where buffelgrass or woody vegetation was present in dense stands (Best 2005, p. 3). The unpaved ROWs on private lands in south Texas for oil and gas wells, wind farms, service roads, pipelines, and powerlines could benefit prostrate milkweed through the periodic mowing of road margins. However, disturbed soils along ROWs are rapidly colonized by buffelgrass.

The Texas Natural Diversity Database (TXNDD) lists invasive species, primarily buffelgrass, as a pervasive threat of extreme severity to prostrate milkweed. The TXNDD defines a pervasive threat as one that affects all or most (71–100 percent) of a species' populations, occurrences, or extent. An extreme level of severity is one that is likely to destroy or eliminate occurrences or habitat or reduce population sizes by 71–100 percent (TXNDD 2016). It is likely that buffelgrass has negatively impacted all Texas populations (TXNDD 2019–2020, entire; Eason 2019, pers. comm.; Kieschnick 2019, pers. comm.; Santore 2019, unpaginated). Competition from buffelgrass is the greatest threat to prostrate milkweed.

Root-Plowing and Conversion of Native Grassland and Savanna

Root-plowing is a brush control method that uses powerful tracked vehicles to excavate the roots of woody plants with heavy steel subsoil rippers that dig several feet into the ground. The dead trees and shrubs are then burned, and the root-plowed soils are planted with buffelgrass for livestock grazing. Root-plowing and conversion to buffelgrass pasture is a widely conducted practice in south Texas and northeast Mexico, occurring in much of the potential habitat of prostrate milkweed. Extensive areas of recently root-plowed lands can be identified in aerial photographs. These practices have been and are still subsidized by the United States Department of Agriculture (USDA) Natural Resources Conservation Service and its precursor, the USDA Soil Conservation Service.

Root-plowing temporarily reduces the encroachment of woody plants into the grassland component of former savannas. The conversion of native habitats to improved pastures dominated by buffelgrass or other introduced grasses greatly reduces the abundance and diversity of most native grass and forb species (Woodin *et al.* 2010, p. 1). Very few, if any, prostrate milkweed plants survive following root-plowing and buffelgrass planting. This is likely due to the excavation and desiccation of most tubers during root-plowing; subsequently, the few remaining individuals decline due to competition from dense buffelgrass cover.

Conversely, prostrate milkweed occurs in well-managed rangelands, provided that the soil was not previously root-plowed or otherwise disturbed (Service 2020, p. 53). Most milkweed species are unpalatable to cattle, and often increase in abundance on grazed lands. Livestock, including cattle, sheep, and horses, graze preferentially on grasses and forbs (broad-leaved herbaceous plants), including buffelgrass, and non-toxic herbaceous plants, and therefore reduce competition with prostrate milkweed from these plants (Service 2020, p. 41). In addition to grazing, livestock may also reduce competition with prostrate milkweed by trampling herbaceous plants (Service 2020, p. 41). Because prostrate milkweed is often observed in the wheel ruts of dirt roads, it appears to be unusually tolerant of trampling; thus, the effect of livestock trampling is minimal (Service 2020, pp. 41–42). Periodic livestock grazing reduces competition from native and introduced grasses. In South Texas, over-grazed rangelands typically become invaded by woody plants, reducing the habitat suitability for prostrate milkweed. Hence, management practices that promote sustainable grazing of native grasses are beneficial to prostrate milkweed (Service 2020, p. 41).

Road and ROW Construction and Maintenance

Oil and gas exploration and wind energy development are occurring at a rapid pace in Starr and Zapata Counties. Seismic exploration and the construction of roads and caliche pads for oil and gas wells and wind turbines can destroy plants and their habitats within the construction footprint (Reemts *et al.* 2014, pp. 123 and 125; Leslie 2016, p. 49). Additionally, graded service roads and other permanent structures may indirectly affect the hydrology of surrounding habitats by diverting and channeling water through drainage culverts. Invasive buffelgrass quickly colonizes disturbed roadsides, then invades adjacent habitats. Heavy vehicle traffic during oil and gas well drilling and wind farm construction may increase the frequency of road maintenance, such as grading or widening (Peña 2019, pers. comm.). Grading or blading a caliche road involves scraping the road's surface with a large heavy blade to remove ruts and roadside vegetation. Increased frequency of road maintenance that removes above-ground portions of plants could reduce or eliminate prostrate milkweed flower and fruit production. Conversely, grading or blading of caliche roads conducted during the milkweed's dormant periods may benefit the species by temporarily reducing competition from grasses and forbs (TXNDD 2019, p. 11). TXNDD (2019) ranks road expansion as a pervasive threat (affects all or most (71–100 percent) of a species' populations, occurrences, or extent) of extreme severity to prostrate milkweed.

All or parts of nine prostrate milkweed occurrences are in the margins of improved highway ROWs. All of these highway ROW populations have declined since they were first observed, likely due to the frequency of soil disturbance and invasive grass competition (Service 2020, p. 40). In addition, from 2010 to 2012, Texas Department of Transportation (TxDOT) widened segments of U.S. Highway 83 that affected at least three known prostrate milkweed sites: Arroyo del Tigre Grande, Mission Mier a Visita, and Arroyo Roma (Strong and Williamson 2015, p. 51; Paradise 2019, pers. comm.). TxDOT has also scheduled additional road widening or construction at five known prostrate milkweed populations: Arroyo del Tigre Grande, Arroyo del Tigre Chiquito, Arroyo de los Mudos, Mission Mier a Visita, and Arroyo Roma (TxDOT 2019, unpaginated). U.S. Customs and Border Protection (CBP) has scheduled road

improvements at the prostrate milkweed population site located in the Arroyo Morteros tract of the Lower Rio Grande Valley National Wildlife Refuge (NWR) (Vallejo 2019, pers. comm.).

In contrast, all or parts of three prostrate milkweed occurrences are in the margins of unpaved rural roads. These relatively stable populations have persisted in narrow strips of native vegetation between the gravel or caliche roadbeds and the fence lines of adjacent private properties. The soils in these narrow, naturally vegetated strips have never been excavated, and they have relatively little buffelgrass cover.

The installation of natural gas pipelines and fiber-optic cables has removed prostrate milkweed plants in the Dolores and Arroyo del Tigre Chiquito populations in the past (Damunde and Poole 1990, p. 32; Boydston 1993, unpaginated; Campos 1993, unpaginated). In 1995, Southwestern Bell installed a fiber-optic cable in the Highway 83 ROW, 2.6 miles south of the Webb-Zapata County line, which removed at least 100 individuals at the Dolores population (Service 1995, p. 1). In 1993, prior to the fiber-optic cable installation, this population was estimated to have 100 to 200 individuals (TXNDD 2019, entire) and was the largest known population of prostrate milkweed.

In summary, prostrate milkweed faces risks from ROWs and road construction and maintenance associated with oil and gas activities, wind energy development, and utility and pipeline corridor construction.

Border Security Development and Enforcement Activities

All known Texas populations of prostrate milkweed are within 9 miles (14.5 km) of the Texas-Mexico border. To address border security concerns, additional border barrier construction was proposed in the Rio Grande Valley, including the Arroyo Morteros tract of the Lower Rio Grande Valley NWR. Should border wall construction occur, and depending on the alignment, construction could remove prostrate milkweed plants that occur within the construction footprint. Additionally, CBP plans to improve roads across this tract (Vallejo 2019, pers. comm.) and may also install new drag strips along existing roads. Drag strips are 13- to 16-foot (ft) (4- to 5-m) -wide swaths cleared of all vegetation and regularly scraped to keep the soil surface loose, in order to detect recent foot traffic. Due to the high gypsum content, soils in this area are extremely vulnerable to gully erosion. Hence, the unvegetated, continually disturbed drag strips may exacerbate soil erosion and impact a much wider area. TXNDD ranks drag strip construction within prostrate milkweed populations as a small threat (defined as a threat that affects 1–10 percent of the total population or occurrences or extent) with an extreme level of severity (likely to destroy or eliminate occurrences or habitat, or reduce population by 71–100 percent) (TXNDD 2016). Consequently, the construction of border barriers, roads, and drag strips are potential threats of high magnitude to prostrate milkweed populations, depending on their alignment, design, and proximity to populations and local topography.

Native plant populations are legally protected on NWRs and, if listed under the Act, have additional legal protections from federally funded or regulated actions. However, a provision of the REAL ID Act of 2005 gives the Secretary of Homeland Security authority to waive other Federal laws, including the Endangered Species Act, in order to expedite construction of border barriers. Therefore, border barrier construction on private and public lands is exempt from consultation with the Service under section 7 of the Act. During the previous phase of border barrier construction, beginning in 2007, the Department of Homeland Security (DHS) and the Service coordinated to establish best management practices for the federally listed plants and animals in the project impact area (DHS 2008); nevertheless, these best management practices did not address prostrate milkweed.

Small Population Sizes and Population Fragmentation

Small, isolated populations are more vulnerable to catastrophic losses caused by random fluctuations in recruitment (demographic stochasticity) or variations in rainfall or other environmental factors (environmental stochasticity) (Service 2016, p. 20). Small, reproductively isolated populations are susceptible to the loss of genetic diversity, to genetic drift, and to inbreeding (Barrett and Kohn 1991, pp. 3–30). Due to the small size and isolation of prostrate milkweed populations, several may already suffer from genetic bottlenecks, genetic drift, inbreeding, and loss of allelic diversity.

In addition to population size, it is likely that population density and connectivity also influence population viability (Service 2020, p. 51). Prostrate milkweed is very likely to be an obligate outcrosser (fertilization between different individuals), as are most other *Asclepias* species, which requires that genetically compatible individuals be clustered within the forage range of the native pollinators for reproduction to occur (Service 2020, p. 51). While the specific pollinators of this species have not been revealed, they are likely to be large bees or wasps, and the forage range could be up to several kilometers. If this is the case, viable populations of prostrate milkweed could be dispersed at very low densities over relatively large areas, provided that they lie within fairly contiguous habitats that are traversed by pollinating insects. Thus, the small, isolated clusters of prostrate milkweed that have been documented, principally along public roads that slice through large expanses of potential habitat on private lands, may represent only tiny fractions of larger, highly dispersed populations (Service 2020, p. 51).

Based strictly on the available scientific data, the documented populations of prostrate milkweed are all far below the estimated MVP level and may be affected by the demographic and genetic consequences of small population sizes and by fragmentation of populations.

Summary

Our analysis of the past, current, and future influences on the needs of prostrate milkweed for long-term viability revealed several threats that pose a risk to current and future viability: Competition from introduced invasive grass (buffelgrass); root-plowing of rangelands; development of new oil and gas wells, wind energy farms, roads, pipelines, and utility corridors; development of new border barriers and drag strips; and the demographic and genetic consequences of small population sizes and population fragmentation. Conversely, well-managed livestock grazing of rangeland is compatible with management of prostrate milkweed habitat and may actually benefit this species.

Species Condition

The current condition of prostrate milkweed takes into account the current status and risks to its populations. In the SSA report, for each population, we developed and assigned condition categories for two demographic factors and two habitat factors that are important for viability of prostrate milkweed. The condition scores for each factor were then used to estimate the probability of persistence over the next 30 years. Populations were rated high, moderate, or low when that probability is greater than 90 percent, between 60 and 90 percent, or between 10 and 60 percent, respectively. Functionally

extirpated populations are not expected to persist over 30 years or are already extirpated.

There are 24 populations of prostrate milkweed remaining in Starr and Zapata Counties, Texas, and in Tamaulipas and eastern Nuevo León, Mexico (see Table 1, below). The species range extends more than 200 miles (320 kilometers) from northwest to southeast. In Texas, one population, Dolores, is somewhat isolated in northern Zapata County, with the nearest known population approximately 25 miles (40 km) away. In Mexico, eight known populations are located in isolated pockets widely scattered in Tamaulipas and eastern Nuevo León. However, botanists have only surveyed a small proportion of the species' range. Furthermore, the species remains dormant and undetectable except for short periods of time after infrequent, heavy rainfall. Consequently, although the species is certainly rare, its actual abundance is difficult to determine. It is likely that, historically, populations occurred between these areas, connecting the populations in Texas and Mexico. Because they are widely separated, natural gene flow or reestablishment following disturbance is very unlikely between the 24 known populations. Based upon our analysis of current conditions of these 24 extant populations, none are in high condition, 5 are in moderate condition, and 19 are in low condition.

TABLE 1—SUMMARY OF CURRENT CONDITION FOR PROSTRATE MILKWEED

Population name	Current condition
Dolores	Low.
14493	Low.
14491	Low.
Arroyo del Tigre Grande	Moderate.
Arroyo del Tigre Chiquito	Low.
FM 2098	Low.
Falcon	Low.
Los Alvaros	Moderate.
Arroyo Morteros Tract	Moderate.
Los Arrieros Loop	Low.
Arroyo de los Mudos	Low.
Mission Mier a Visita	Low.
San Julián Road	Moderate.
FM 3167	Moderate.
Arroyo Roma	Low.
Arroyo Ramirez Tract	Low.
Rancho La Coma	Low.
Road to Guerrero Viejo	Low.
Carboneras	Low.
Punta de Alambre	Low.
Intersection of 101–180	Low.
Rio El Catán	Low.
Rancho Loreto North	Low.
Rancho Loreto South	Low.

The two demographic factors used to analyze resiliency of prostrate milkweed populations are abundance and recruitment rate. Related to abundance, a highly resilient population of prostrate milkweed has 1,600 or more adult individuals, a moderately resilient population has from 800 to 1,600 mature individuals, and a population with less than 800 mature individuals has low resilience (Service 2020, p. 38). Prostrate milkweed populations have high resiliency if the recruitment rate is greater than or equal to 25 percent of individuals producing viable seeds per year. Moderately resilient populations have recruitment rates of between 15 and 24 percent per year, and populations with low resiliency have recruitment rates of less than 15 percent per year (Service 2020, p. 57).

The two habitat factors used to analyze resiliency of prostrate milkweed populations were canopy cover and ground cover. Highly resilient populations have less than 30 percent canopy cover and have all bare ground or are sparsely vegetated with mostly native grass and/or forbs. Moderately resilient populations have between 30 and 60 percent canopy cover and are sparsely vegetated with a mixture of native and nonnative grasses and/or forbs. Minimally resilient populations have between 61 and 100 percent canopy cover and a dense ground cover of native or introduced grasses and forbs and little or no bare ground (Service 2020, p. 57).

Redundancy is low for this species due to low numbers of populations in moderate to high condition for resiliency, making prostrate milkweed populations vulnerable to extirpations from catastrophic events. Because buffelgrass invasion is prevalent in this area, ecological diversity among the known populations is limited. Further, the populations are isolated and widespread across the range, and therefore gene flow among the populations is limited. As a consequence of these current conditions, the viability of the prostrate milkweed now primarily depends on maintaining and restoring the remaining isolated populations and potentially discovering or reintroducing new populations where feasible.

As part of the SSA, we also developed three plausible future scenarios to capture the range of uncertainties regarding future threats and the projected responses by the prostrate milkweed. Our scenarios included a continuing conditions scenario, which incorporated the current risk factors continuing on the same trajectory that they are on now. We also evaluated a conservation scenario and a scenario with increased stressors. Because we determined that the current condition of the prostrate milkweed is consistent with an endangered species (see Determination of Species Status, below), we are not presenting the results of the future scenarios in this proposed rule. Please refer to the SSA report (Service 2020) for the full analysis of future scenarios.

We note that, by using the SSA framework to guide our analysis of the scientific information documented in the SSA report, we have not only analyzed individual effects on the species, but we have also analyzed their potential cumulative effects. We incorporate the cumulative effects into our SSA analysis when we characterize the current and future condition of the species. To assess the current and future condition of the species, we undertake an iterative analysis that encompasses and incorporates the threats individually and then accumulates and evaluates the effects of all the factors that may be influencing the species, including threats and conservation efforts. Because the SSA framework considers not just the presence of the factors, but to what degree they collectively influence risk to the entire species, our assessment integrates the cumulative effects of the factors and replaces a standalone cumulative effects analysis.

Determination of Prostrate Milkweed Status

Section 4 of the Act (16 U.S.C. 1533) and its implementing regulations (50 CFR part 424) set forth the procedures for determining whether a species meets the definition of an endangered species or a threatened species. The Act defines endangered species as a species ''in danger of extinction throughout all or a significant portion of its range,'' and threatened species as a species ''likely to become an endangered species within the foreseeable future throughout all or a significant portion of its range.'' The Act requires that we determine whether a species meets the definition of endangered species or threatened species because of any of the following factors: (A) The present or threatened destruction, modification, or curtailment of its habitat or range; (B) Overutilization for commercial, recreational, scientific, or educational purposes; (C) Disease or predation; (D) The inadequacy of existing regulatory mechanisms; or (E) Other natural or manmade factors affecting its continued existence.

Status Throughout All of Its Range

After evaluating threats to the species and assessing the cumulative effect of

the threats under the section 4(a)(1) factors, we found that, of the 24 known prostrate milkweed populations remaining, 19 are small and isolated and are low resiliency, and five have moderate resiliency and connection to other populations, and none have high resiliency. Several factors pose a threat to prostrate milkweed, including competition from introduced invasive grass; habitat loss and degradations from root-plowing and conversion of native vegetation to improved buffelgrass pasture; habitat loss from ROW construction and maintenance from energy development and road and utility construction; habitat loss from border security development and enforcement activities (Factor A from the Act); and the demographic and genetic consequences of small population sizes (Factor E).

All the aforementioned threats are currently affecting the known populations of prostrate milkweed. Buffelgrass has already negatively impacted all of the Texas populations (TXNDD 2019–2020, entire; Eason 2019, pers. comm.; Kieschnick 2019, pers. comm.; Santore 2019, unpaginated) and will continue to do so in the future. Habitat loss and degradation from root-plowing and conversion of native vegetation to improved buffelgrass pasture has also already been occurring for many years (Service 2020, p. 40). Habitat loss from ROW construction and maintenance from energy development and road and utility construction has already been observed from oil and gas development occurring in Zapata County. As of November 2019, no wind turbines, oil or gas well pads, pipelines, or energy service roads have been constructed directly within known prostrate milkweed populations. However, some Starr County prostrate milkweed populations are less than 2.0 km (1.2 mi) from existing wind turbines (Service 2020, pp. 42–43), and a few wind energy farms are expected to be constructed in the future, which could lead to additional habitat loss. Habitat loss from border security development and enforcement activities has occurred in recent years and is expected to continue into the future. And, finally, the demographic and genetic consequences of small population sizes is a current threat to the prostrate milkweed. This situation is not expected to change into the future.

In addition to the current threats, redundancy and representation are also limited. There are twenty-four known populations that are distributed widely across its range, and the majority of those populations are currently in low condition. Should a catastrophic event occur, the populations are vulnerable to extirpation because they are small and isolated from each other. The small, reproductively isolated populations are also susceptible to the loss of genetic diversity, genetic drift, and inbreeding due to random fluctuations in recruitment (demographic stochasticity) or variations in rainfall or other environmental factors (environmental stochasticity). Because of the overall species' current resiliency, redundancy, and representation, prostrate milkweed is currently in danger of extinction throughout all of its range. We do not find the species meets the definition of a threatened species because the species has already shown low levels in current resiliency, redundancy, and representation due to the threats mentioned above. Thus, after assessing the best available information, we determine that prostrate milkweed is in danger of extinction throughout all of its range.

Status Throughout a Significant Portion of Its Range

Under the Act and our implementing regulations, a species may warrant listing if it is in danger of extinction or likely to become so in the foreseeable future throughout all or a significant portion of its range. We have determined that the prostrate milkweed is in danger of extinction throughout all of its range and accordingly did not undertake an analysis of any significant portion of its range. Because the prostrate milkweed warrants listing as endangered throughout all of its range, our determination is consistent with the decision in *Center for Biological Diversity* v. *Everson*, 2020 WL 437289 (D.D.C. Jan. 28, 2020), in which the court vacated the aspect of the Final Policy on Interpretation of the Phrase ''Significant Portion of Its Range'' in the Endangered Species Act's Definitions of ''Endangered Species'' and ''Threatened Species'' (79 FR 37578; July 1, 2014) that provided the Service does not undertake an analysis of significant portions of a species' range if the species warrants listing as threatened throughout all of its range.

Determination of Status

Our review of the best available scientific and commercial information indicates that the prostrate milkweed meets the definition of an endangered species. Therefore, we propose to list the prostrate milkweed as an endangered species in accordance with sections 3(20) and 4(a)(1) of the Act.

Available Conservation Measures

Conservation measures provided to species listed as endangered or threatened species under the Act include recognition, recovery actions, requirements for Federal protection, and prohibitions against certain practices. Recognition through listing results in public awareness, and conservation by Federal, State, Tribal, and local agencies, private organizations, and individuals. The Act encourages cooperation with the States and other countries and calls for recovery actions to be carried out for listed species. The protection required by Federal agencies and the prohibitions against certain activities are discussed, in part, below.

The primary purpose of the Act is the conservation of endangered and threatened species and the ecosystems upon which they depend. The ultimate goal of such conservation efforts is the recovery of these listed species, so that they no longer need the protective measures of the Act. Section 4(f) of the Act calls for the Service to develop and implement recovery plans for the conservation of endangered and threatened species. The recovery planning process involves the identification of actions that are necessary to halt or reverse the species' decline by addressing the threats to its survival and recovery. The goal of this process is to restore listed species to a point where they are secure, self-sustaining, and functioning components of their ecosystems.

Recovery planning consists of preparing draft and final recovery plans, beginning with the development of a recovery outline and making it available to the public within 30 days of a final listing determination. The recovery outline guides the immediate implementation of urgent recovery actions and describes the process to be used to develop a recovery plan. Revisions of the plan may be done to address continuing or new threats to the species, as new substantive information becomes available. The recovery plan also identifies recovery criteria for review of when a species may be ready for reclassification from endangered to threatened (''downlisting'') or removal from protected status (''delisting''), and methods for monitoring recovery progress. Recovery plans also establish a framework for agencies to coordinate their recovery efforts and provide estimates of the cost of implementing recovery tasks. Recovery teams (composed of species experts, Federal and State agencies, nongovernmental organizations, and stakeholders) are often established to develop recovery

plans. When completed, the recovery outline, draft recovery plan, and the final recovery plan will be available on our website (*https://www.fws.gov/endangered*), or from our Texas Coastal Ecological Services Field Office (see **FOR FURTHER INFORMATION CONTACT**).

Implementation of recovery actions generally requires the participation of a broad range of partners, including other Federal agencies, States, Tribes, nongovernmental organizations, businesses, and private landowners. Examples of recovery actions include habitat restoration (*e.g.,* restoration of native vegetation), research, captive propagation and reintroduction, and outreach and education. The recovery of many listed species cannot be accomplished solely on Federal lands because their range may occur primarily or solely on non-Federal lands. To achieve recovery of these species requires cooperative conservation efforts on private, State, and Tribal lands.

If this species is listed, funding for recovery actions will be available from a variety of sources, including Federal budgets, State programs, and cost-share grants for non-Federal landowners, the academic community, and nongovernmental organizations. In addition, pursuant to section 6 of the Act, the State of Texas would be eligible for Federal funds to implement management actions that promote the protection or recovery of the prostrate milkweed. Information on our grant programs that are available to aid species recovery can be found at: *https://www.fws.gov/grants.*

Although the prostrate milkweed is only proposed for listing under the Act at this time, please let us know if you are interested in participating in recovery efforts for this species. Additionally, we invite you to submit any new information on this species whenever it becomes available and any information you may have for recovery planning purposes (see **FOR FURTHER INFORMATION CONTACT**).

Section 7(a) of the Act requires Federal agencies to evaluate their actions with respect to any species that is proposed or listed as an endangered or threatened species and with respect to its critical habitat, if any is designated. Regulations implementing this interagency cooperation provision of the Act are codified at 50 CFR part 402. Section 7(a)(4) of the Act requires Federal agencies to confer with the Service on any action that is likely to jeopardize the continued existence of a species proposed for listing or result in destruction or adverse modification of proposed critical habitat. If a species is listed subsequently, section 7(a)(2) of the Act requires Federal agencies to ensure that activities they authorize, fund, or carry out are not likely to jeopardize the continued existence of the species or destroy or adversely modify its critical habitat. If a Federal action may affect a listed species or its critical habitat, the responsible Federal agency must enter into consultation with the Service.

Federal agency actions within the species' habitat that may require conference or consultation or both as described in the preceding paragraph include management and any other landscape-altering activities on Federal lands administered by the U.S. Fish and Wildlife Service.

The Act and its implementing regulations set forth a series of general prohibitions and exceptions that apply to endangered plants. The prohibitions of section 9(a)(2) of the Act, codified at 50 CFR 17.61, make it illegal for any person subject to the jurisdiction of the United States to: Import or export; remove and reduce to possession from areas under Federal jurisdiction; maliciously damage or destroy on any such area; remove, cut, dig up, or damage or destroy on any other area in knowing violation of any law or regulation of any State or in the course of any violation of a State criminal trespass law; deliver, receive, carry, transport, or ship in interstate or foreign commerce, by any means whatsoever and in the course of a commercial activity; or sell or offer for sale in interstate or foreign commerce an endangered plant. Certain exceptions apply to employees of the Service, the National Marine Fisheries Service, other Federal land management agencies, and State conservation agencies.

We may issue permits to carry out otherwise prohibited activities involving endangered plants under certain circumstances. Regulations governing permits are codified at 50 CFR 17.62. With regard to endangered plants, a permit may be issued for scientific purposes or for enhancing the propagation or survival of the species. The statute also contains certain exemptions from the prohibitions, which are found in sections 9 and 10 of the Act.

It is our policy, as published in the **Federal Register** on July 1, 1994 (59 FR 34272), to identify to the maximum extent practicable at the time a species is listed, those activities that would or would not constitute a violation of section 9 of the Act. The intent of this policy is to increase public awareness of the effect of a proposed listing on proposed and ongoing activities within the range of the species proposed for listing. Based on the best available information, the following actions are unlikely to result in a violation of section 9, if these activities are carried out in accordance with existing regulations and permit requirements; this list is not comprehensive:

(1) Normal agricultural and silvicultural practices, including herbicide and pesticide use, that are carried out in accordance with any existing regulations, permit and label requirements, and best management practices; and

(2) Normal residential landscaping activities on non-Federal lands; and

(3) Recreational use with minimal ground disturbance.

Based on the best available information, the following activities may potentially result in a violation of section 9 of the Act if they are not authorized in accordance with applicable law; this list is not comprehensive:

(1) Unauthorized handling, removing, trampling, or collecting of prostrate milkweed on Federal land; and

(2) Removing, cutting, digging up, or damaging or destroying prostrate milkweed in knowing violation of any law or regulation of the State of Texas or in the course of any violation of a State criminal trespass law.

II. Critical Habitat

Background

Critical habitat is defined in section 3 of the Act as:

(1) The specific areas within the geographical area occupied by the species, at the time it is listed in accordance with the Act, on which are found those physical or biological features

(a) Essential to the conservation of the species, and

(b) Which may require special management considerations or protection; and

(2) Specific areas outside the geographical area occupied by the species at the time it is listed, upon a determination that such areas are essential for the conservation of the species.

Our regulations at 50 CFR 424.02 define the geographical area occupied by the species as an area that may generally be delineated around species' occurrences, as determined by the Secretary (*i.e.,* range). Such areas may include those areas used throughout all or part of the species' life cycle, even if not used on a regular basis (*e.g.,* migratory corridors, seasonal habitats, and habitats used periodically, but not solely by vagrant individuals).

Additionally, our regulations at 50 CFR 424.02 define the word ''habitat'' as, for the purposes of designating critical habitat only, ''the abiotic and biotic setting that currently or periodically contains the resources and conditions necessary to support one or more life processes of a species.''

Conservation, as defined under section 3 of the Act, means to use and the use of all methods and procedures that are necessary to bring an endangered or threatened species to the point at which the measures provided pursuant to the Act are no longer necessary. Such methods and procedures include, but are not limited to, all activities associated with scientific resources management such as research, census, law enforcement, habitat acquisition and maintenance, propagation, live trapping, and transplantation, and, in the extraordinary case where population pressures within a given ecosystem cannot be otherwise relieved, may include regulated taking.

Critical habitat receives protection under section 7 of the Act through the requirement that Federal agencies ensure, in consultation with the Service, that any action they authorize, fund, or carry out is not likely to result in the destruction or adverse modification of critical habitat. The designation of critical habitat does not affect land ownership or establish a refuge, wilderness, reserve, preserve, or other conservation area. Designation also does not allow the government or public to access private lands, nor does designation require implementation of restoration, recovery, or enhancement measures by non-Federal landowners. Where a landowner requests Federal agency funding or authorization for an action that may affect a listed species or critical habitat, the Federal agency would be required to consult with the Service under section 7(a)(2) of the Act. However, even if the Service were to conclude that the proposed activity would result in destruction or adverse modification of the critical habitat, the Federal action agency and the landowner are not required to abandon the proposed activity, or to restore or recover the species; instead, they must implement ''reasonable and prudent alternatives'' to avoid destruction or adverse modification of critical habitat.

Under the first prong of the Act's definition of critical habitat, areas within the geographical area occupied by the species at the time it was listed are included in a critical habitat designation if they contain physical or biological features (1) which are essential to the conservation of the species and (2) which may require special management considerations or protection. For these areas, critical habitat designations identify, to the extent known using the best scientific and commercial data available, those physical or biological features that are essential to the conservation of the species (such as space, food, cover, and protected habitat). In identifying those physical or biological features that occur in specific occupied areas, we focus on the specific features that are essential to support the life-history needs of the species, including, but not limited to, water characteristics, soil type, geological features, prey, vegetation, symbiotic species, or other features. A feature may be a single habitat characteristic or a more complex combination of habitat characteristics. Features may include habitat characteristics that support ephemeral or dynamic habitat conditions. Features may also be expressed in terms relating to principles of conservation biology, such as patch size, distribution distances, and connectivity.

Under the second prong of the Act's definition of critical habitat, we can designate critical habitat in areas outside the geographical area occupied by the species at the time it is listed, upon a determination that such areas are essential for the conservation of the species. The implementing regulations at 50 CFR 424.12(b)(2) further delineate unoccupied critical habitat by setting out three specific parameters: (1) When designating critical habitat, the Secretary will first evaluate areas occupied by the species; (2) the Secretary will only consider unoccupied areas to be essential where a critical habitat designation limited to geographical areas occupied by the species would be inadequate to ensure the conservation of the species; and (3) for an unoccupied area to be considered essential, the Secretary must determine that there is a reasonable certainty both that the area will contribute to the conservation of the species and that the area contains one or more of those physical or biological features essential to the conservation of the species.

Section 4 of the Act requires that we designate critical habitat on the basis of the best scientific data available. Further, our Policy on Information Standards Under the Endangered Species Act (published in the **Federal Register** on July 1, 1994 (59 FR 34271)), the Information Quality Act (section 515 of the Treasury and General Government Appropriations Act for Fiscal Year 2001 (Pub. L. 106–554; H.R. 5658)), and our associated Information Quality Guidelines provide criteria, establish procedures, and provide guidance to ensure that our decisions are based on the best scientific data available. They require our biologists, to the extent consistent with the Act and with the use of the best scientific data available, to use primary and original sources of information as the basis for recommendations to designate critical habitat.

When we are determining which areas should be designated as critical habitat, our primary source of information is generally the information from the SSA report and information developed during the listing process for the species. Additional information sources may include any generalized conservation strategy, criteria, or outline that may have been developed for the species; the recovery plan for the species; articles in peer-reviewed journals; conservation plans developed by States and counties; scientific status surveys and studies; biological assessments; other unpublished materials; or experts' opinions or personal knowledge.

As the regulatory definition of ''habitat'' reflects (50 CFR 424.02), habitat is dynamic, and species may move from one area to another over time. We recognize that critical habitat designated at a particular point in time may not include all of the habitat areas that we may later determine are necessary for the recovery of the species. For these reasons, a critical habitat designation does not signal that habitat outside the designated area is unimportant or may not be needed for recovery of the species. Areas that are important to the conservation of the species, both inside and outside the critical habitat designation, will continue to be subject to: (1) Conservation actions implemented under section 7(a)(1) of the Act; (2) regulatory protections afforded by the requirement in section 7(a)(2) of the Act for Federal agencies to ensure their actions are not likely to jeopardize the continued existence of any endangered or threatened species; and (3) the prohibitions found in section 9 of the Act. Federally funded or permitted projects affecting listed species outside their designated critical habitat areas may still result in jeopardy findings in some cases. These protections and conservation tools will continue to contribute to recovery of the species. Similarly, critical habitat designations made on the basis of the best available information at the time of designation will not control the direction and substance of future recovery plans, habitat conservation plans (HCPs), or other species conservation planning

efforts if new information available at the time of those planning efforts calls for a different outcome.

Prudency Determination

Section 4(a)(3) of the Act, as amended, and implementing regulations (50 CFR 424.12) require that, to the maximum extent prudent and determinable, the Secretary shall designate critical habitat at the time the species is determined to be an endangered or threatened species. Our regulations (50 CFR 424.12(a)(1)) state that the Secretary may, but is not required to, determine that a designation would not be prudent in the following circumstances:

(i) The species is threatened by taking or other human activity and identification of critical habitat can be expected to increase the degree of such threat to the species;

(ii) The present or threatened destruction, modification, or curtailment of a species' habitat or range is not a threat to the species, or threats to the species' habitat stem solely from causes that cannot be addressed through management actions resulting from consultations under section 7(a)(2) of the Act;

(iii) Areas within the jurisdiction of the United States provide no more than negligible conservation value, if any, for a species occurring primarily outside the jurisdiction of the United States;

(iv) No areas meet the definition of critical habitat; or

(v) The Secretary otherwise determines that designation of critical habitat would not be prudent based on the best scientific data available.

As discussed earlier in this document, there is currently no imminent threat of collection or vandalism identified under Factor B for this species, and identification and mapping of critical habitat is not expected to initiate any such threat. In our SSA and proposed listing determination for prostrate milkweed, we determined that the present or threatened destruction, modification, or curtailment of habitat or range is a threat to prostrate milkweed and that those threats in some way can be addressed by section 7(a)(2) consultation measures. We are able to identify areas that meet the definition of critical habitat where the species occurs in the United States. Therefore, because none of the circumstances enumerated in our regulations at 50 CFR 424.12(a)(1) have been met and because the Secretary has not identified other circumstances for which this designation of critical habitat would not be prudent, we have determined that the designation of critical habitat is prudent for prostrate milkweed.

Critical Habitat Determinability

Having determined that designation is prudent, under section 4(a)(3) of the Act we must find whether critical habitat for the prostrate milkweed is determinable. Our regulations at 50 CFR 424.12(a)(2) state that critical habitat is not determinable when one or both of the following situations exist:

(i) Data sufficient to perform required analyses are lacking, or

(ii) The biological needs of the species are not sufficiently well known to identify any area that meets the definition of ''critical habitat.''

When critical habitat is not determinable, the Act allows the Service an additional year to publish a critical habitat designation (16 U.S.C. 1533(b)(6)(C)(ii)).

We reviewed the available information pertaining to the biological needs of the species and habitat characteristics where this species is located. This and other information represent the best scientific data available and led us to conclude that the designation of critical habitat is determinable for the prostrate milkweed.

Physical or Biological Features Essential to the Conservation of the Species

In accordance with section 3(5)(A)(i) of the Act and regulations at 50 CFR 424.12(b), in determining which areas we will designate as critical habitat from within the geographical area occupied by the species at the time of listing, we consider the physical or biological features (PBFs) that are essential to the conservation of the species and that may require special management considerations or protection. The regulations at 50 CFR 424.02 define ''physical or biological features essential to the conservation of the species'' as the features that occur in specific areas and that are essential to support the life-history needs of the species, including, but not limited to, water characteristics, soil type, geological features, sites, prey, vegetation, symbiotic species, or other features. A feature may be a single habitat characteristic or a more complex combination of habitat characteristics. Features may include habitat characteristics that support ephemeral or dynamic habitat conditions. Features may also be expressed in terms relating to principles of conservation biology, such as patch size, distribution distances, and connectivity. For example, physical features essential to the conservation of the species might include gravel of a particular size required for spawning, alkaline soil for seed germination, protective cover for migration, or susceptibility to flooding or fire that maintains necessary early-successional habitat characteristics. Biological features might include prey species, forage grasses, specific kinds or ages of trees for roosting or nesting, symbiotic fungi, or a particular level of nonnative species consistent with conservation needs of the listed species. The features may also be combinations of habitat characteristics and may encompass the relationship between characteristics or the necessary amount of a characteristic essential to support the life history of the species.

In considering whether features are essential to the conservation of the species, we may consider an appropriate quality, quantity, and spatial and temporal arrangement of habitat characteristics in the context of the life-history needs, condition, and status of the species. These characteristics include, but are not limited to, space for individual and population growth and for normal behavior; food, water, air, light, minerals, or other nutritional or physiological requirements; cover or shelter; sites for breeding, reproduction, or rearing (or development) of offspring; and habitats that are protected from disturbance.

Geological Substrate and Soils

Prostrate milkweed grows in well-drained sandy soils of the Tamaulipan shrubland region of south Texas and northeast Mexico (Service 2020, pp. 22–26). In Starr and Zapata Counties, Texas, the soils of documented sites overlie Eocene and Oligocene sandstones and clays of the Laredo, Yegua, and Jackson geological formations (Stoeser *et al.* 2005). In some occupied sites, a stratum of indurated caliche may also be present; in south Texas, caliche refers to soil strata of precipitated calcium carbonate formed during the early Pliocene (Spearing 1998, pp. 258, 398; Baskin and Hulbert, Jr. 2008, p. 93). Soil types of these occupied sites include deep eolian Hebbronville sands, Copita fine sandy loam, Brennan fine sandy loam, eroded Maverick soils, Catarina clay, and Zapata soils (USDA 1972; USDA 2011). Elevated levels of gypsum are present at some sites.

The climate of the Tamaulipan shrubland region is subtropical and semi-arid. Much of the region's precipitation occurs during infrequent periods of heavy rainfall that interrupt prolonged spells of very hot, dry weather. Rainfall readily infiltrates into the well-drained sandy soils of prostrate milkweed habitats, but moisture does

not persist long in these soils. Many occupied sites have underlying strata of sandstone; these barriers to root growth limit the establishment of trees and taller shrubs. The growth of many plant species is also limited by high soil gypsum concentrations in some occupied sites. The rapid drying of soil, impenetrable rock strata, and high gypsum are all factors that reduce competition from woody plants, grasses, and other herbaceous plants.

Prostrate milkweed forms tubers underground that are able to persist in a dormant condition for one to several years. The species responds very quickly to rainfall; the tubers sprout new stems that emerge, flower, and set seed in a matter of weeks, and the plants store carbohydrates, minerals, and water in tubers. Then the above-ground portions die back during hot, dry weather. Prostrate milkweed does not occur in areas of higher rainfall or where moisture persists longer in deeper silty or clayey soils. The species does not persist when occupied sites develop a dense shrub overstory or dense cover of grasses. We conclude that prostrate milkweed is endemic to sites where it escapes competition from other plants through its unique adaptation to ephemeral soil moisture, prolonged drought, and tolerance of high gypsum concentrations.

Therefore, well-drained sandy soil overlying sandstone or indurated caliche strata is an essential physical feature of prostrate milkweed critical habitats. A high soil gypsum concentration contributes to the habitat suitability of some sites by reducing competition, and is an essential physical feature.

Ecological Community

Within the Tamaulipan shrubland ecological region, prostrate milkweed inhabits arid subtropical grasslands and shrub savannas. It requires an open canopy, where there is little or no shade from trees and shrubs, and relatively little competition from grasses and herbaceous plants; the estimated combined cover of woody plants, grasses, and herbaceous plants at a site in Zapata County was less than 30 percent (Damude and Poole 1990, p. 16). It is likely that naturally occurring wildfires, in the past, maintained the relatively open structure of these plant communities (Scifres and Hamilton 1993, pp. 8–21). We have observed an increased abundance of other Texas species of *Asclepias,* including antelope horns (*A. asperula*), Emory's milkweed (*A. emoryi*), zizotes milkweed (*A. oenotheroides*), and wand milkweed (*A. viridiflora*), during the first few years after sites have burned; this fire-following effect has been described for green milkweed (*A. viridis*) (Baum and Sharber 2012, entire). Prostrate milkweed, like other milkweeds, may also be stimulated to grow and flower after wildfires have reduced competition.

Most *Asclepias* species require outcrossing for effective fertilization of flowers. All *Asclepias* species have highly specialized pollination mechanisms that require animal pollinators to carry pollen from one individual to another. Although the effective pollinators of prostrate milkweed have not been determined, these are likely to include large bees and wasps. For example, the closely related zizotes milkweed is effectively pollinated by very large wasps called tarantula hawks (*Pepsis* spp. and *Hemipepsis* spp.) (Service 2020, pp. 17, 35–36). Therefore, prostrate milkweed habitats must also support populations of large bees and wasps that, in turn, require abundant, diverse sources of pollen and nectar. Much like milkweeds, many pollen and nectar plants are fire followers that are most abundant in sites that burn periodically, but decline when fires are infrequent.

Buffelgrass is an African grass that is widely planted in south Texas for livestock forage. Buffelgrass is highly invasive, and frequently displaces native grasses and herbaceous plants (Best 2009, pp. 310–311), including prostrate milkweed (Service 2020, pp. 39–40) and the pollen and nectar plants needed to support pollinator populations. The majority of prostrate milkweed plants have been observed in disturbed soils where buffelgrass is absent or at low densities (Eason 2019, pers. comm.; Strong 2019, pers. comm.). Prostrate milkweed requires an open canopy with less than 30 percent cover of native and nonnative grasses and herbaceous plants combined (Damude and Poole 1990, p. 16); so, assuming nonnative buffelgrass is more prevalent, we estimate that 20 percent or less cover of buffelgrass is at a low enough density for prostrate milkweed to survive. Therefore, prostrated milkweed habitats must also have less than 20 percent cover of buffelgrass for prostrate milkweed to have access to sufficient resources such as sunlight.

In summary, the essential biological features of prostrate milkweed critical habitats are: (1) Open savannas and grasslands of the Tamaulipan shrubland ecological region; (2) vegetation composition that includes abundant, diverse pollen and nectar plants and healthy populations of native bee and wasp species; and (3) less than 20 percent cover of buffelgrass. Periodic prescribed burning may be necessary to maintain the open structure and diverse composition of the species' habitats.

Summary of Essential Physical or Biological Features

Additional information can be found in the SSA report (Service 2020, available on *https://www.regulations.gov* under Docket No. FWS–R2–ES–2021–0041). We have determined that the following physical or biological features are essential to the conservation of prostrate milkweed:

(1) Well-drained sandy soil overlying strata of sandstone or indurated caliche;

(2) High soil gypsum concentration;

(3) Open savannas and grasslands of the Tamaulipan shrubland ecological region;

(4) Vegetation composition that includes abundant, diverse pollen and nectar plants and healthy populations of native bee and wasp species; and

(5) Less than 20 percent cover of buffelgrass.

Special Management Considerations or Protection

When designating critical habitat, we assess whether the specific areas within the geographical area occupied by the species at the time of listing contain features that are essential to the conservation of the species and which may require special management considerations or protection. The features essential to the conservation of this species may require special management considerations or protection to reduce the following threats: Nonnative invasive grass; root-plowing and conversion of native vegetation to buffelgrass pasture; ROW construction and maintenance from energy development and road and utility construction; border security development and law enforcement activities; and small population sizes. Management activities that could ameliorate these threats include, but are not limited to: Prescribed burning, grazing, and/or brush thinning; nonnative invasive grass control; protection from activities that disturb the soil; and propagation and reintroduction of plants in restorable areas.

In summary, we find that the occupied areas we are proposing to designate as critical habitat contain the PBFs that are essential to the conservation of the species and that may require special management considerations or protection. Special management considerations or protection may be required of the Federal action agency to eliminate, or to

reduce to negligible levels, the threats affecting the PBFs of each unit.

Criteria Used To Identify Critical Habitat

As required by section 4(b)(2) of the Act, we use the best scientific data available to designate critical habitat. In accordance with the Act and our implementing regulations at 50 CFR 424.12(b), we review available information pertaining to the habitat requirements of the species and identify specific areas within the geographical area occupied by the species at the time of listing and any specific areas outside the geographical area occupied by the species to be considered for designation as critical habitat. We are not currently proposing to designate any areas outside the geographical area occupied by the species because we have not identified any unoccupied areas that meet the definition of critical habitat. While prostrate milkweed needs additional populations to reduce the likelihood of extinction in the future, we are not able to identify additional locations that may have a reasonable certainty of contributing to conservation at this time due to limited access to privately owned lands and information regarding lands that would be good candidates for introductions in the species' range.

In summary, for areas within the geographic area occupied by the species at the time of listing, we delineated critical habitat unit boundaries using the following criteria. First, using ArcGIS software, we identified potential habitats in Starr and Zapata Counties that have the essential features of geology and soils described above. The geographic information we obtained about the known populations exists as: (1) Vegetation surveys of entire tracts of land; (2) Element Occurrence (EO) polygons represented in the TXNDD; or (3) points and lines represented in the TXNDD. We then adapted methods to delineate critical habitats for each type of geographic information.

We delineated all of the potential habitats that occur at the Arroyo Ramirez tract and the Arroyo Morteros tract of the Lower Rio Grande Valley NWR as proposed critical habitat (Units 2 and 5). The Lower Rio Grande Valley NWR comprises several disconnected land parcels, rather than one big land area, and these parcels are referred to as ''tracts.'' The two tracts that are included in proposed Units 2 and 5 are isolated areas of refuge land. These NWR tracts are managed for the conservation of native plants and animals, and we have conducted plant surveys and have extensive knowledge of habitat suitability of these tracts.

Similarly, we delineated all of the potential habitats that occur at a private ranch (Unit 6) that is managed for wildlife and plant conservation as proposed critical habitat. The landowner has granted access for plant surveys and vegetation studies to researchers from the Texas Parks and Wildlife Department, academic institutions, and the Service. Two of the known populations are represented as polygons in the TXNDD located in the ROWs of unpaved county roads in Starr County. We have no information about the land uses or habitat suitability of areas outside these polygons. We delineated all of the potential habitats that occur within these polygons (Units 4 and 7) as proposed critical habitat. Three of the known populations are represented as one or more points or lines in the TXNDD located on privately owned land. We have no information about the land uses or habitat suitability of areas outside the points and lines. Because critical habitats must be areas, not points or lines, we delineated all areas of potential habitat within a buffer of 50 m (164 ft) from these points and lines as proposed critical habitat units; we chose the 50-m distance because the TXNDD also used a 50-m buffer for most of these features to account for estimated geographic precision. To complete the delineations of critical habitat areas, we overlaid each critical habitat area described above on Digital Ortho-Quarter Quad aerial photographs to identify and exclude any portions of sites that consisted of unvegetated road beds that are frequently driven and are maintained by road grading, as well as structures and other developed areas that did not contain the geological and soil substrates and vegetative cover that are essential physical and biological features.

We did not include one historical observation that has only approximate location data and cannot be mapped. We also did not include any of the populations reported in the U.S. Highway 83 ROW, all of which have declined since they were first reported. For example, part of EO 3 (Dolores) along U.S. 83 had about 200 individuals in 1988; four surveys conducted from 2009 to 2017 found from 0 to 3 individuals. The degree and frequency of soil disturbance in the ROWs of improved highways has caused almost complete replacement of the native plant community with introduced species, such as buffelgrass. Hence, the essential physical and biological features are no longer present along this improved highway ROW. For the same reasons, we did not include one site in the road bed of a Starr County park where the species was last observed in 1995.

The scale of the maps we prepared under the parameters for publication within the Code of Federal Regulations may not reflect the exclusion of such developed lands. Any such lands inadvertently left inside critical habitat boundaries shown on the maps of this proposed rule have been excluded by text in the proposed rule and are not proposed for designation as critical habitat. Therefore, if the critical habitat is finalized as proposed, a Federal action involving these lands would not trigger section 7 consultation with respect to critical habitat and the requirement of no adverse modification unless the specific action would affect the physical or biological features in the adjacent critical habitat.

We propose to designate as critical habitat lands that we have determined are occupied at the time of listing (*i.e.,* currently occupied) and that contain one or more of the physical or biological features that are essential to support life-history processes of the species.

Units are proposed for designation based on one or more of the physical or biological features being present to support prostrate milkweed's life-history processes. Some units contain all of the identified physical or biological features and support multiple life-history processes. Some units contain only some of the physical or biological features necessary to support the prostrate milkweed's particular use of that habitat.

The proposed critical habitat designation is defined by the map or maps, as modified by any accompanying regulatory text, presented at the end of this document under Proposed Regulation Promulgation. We include more detailed information on the boundaries of the critical habitat designation in the preamble of this document. We will make the coordinates or plot points or both on which each map is based available to the public on *https://www.regulations.gov* at Docket No. FWS–R2–ES–2021–0041 and on our internet site *https://www.fws.gov/southwest/es/TexasCoastal/.*

Proposed Critical Habitat Designation

We are proposing eight units as critical habitat for prostrate milkweed. The critical habitat areas we describe below constitute our current best assessment of areas that meet the definition of critical habitat for prostrate milkweed. The eight areas we propose as critical habitat units are all TXNDD EOs: Unit 1 (EO 3), Unit 2 (EO 10), Unit

3 (EO 11), Unit 4 (EO 12), Unit 5 (EO 15), Unit 6 (EO 16), Unit 7 (EO 17), and Unit 8 (EO 22). Table 2 shows the proposed critical habitat units and the approximate area of each unit. All units are occupied.

TABLE 2—PROPOSED CRITICAL HABITAT UNITS FOR PROSTRATE MILKWEED

[Area estimates reflect all land within critical habitat unit boundaries]

Critical habitat unit	Land ownership by type	Size of unit in acres (hectares)	Occupied?
1 (EO 3)	County Road ROW and Private	10.51 (4.25)	Yes.
2 (EO 10)	Federal—Service	105.43 (42.67)	Yes.
3 (EO 11)	Private	4.0 (1.62)	Yes.
4 (EO 12)	County Road ROW	4.2 (1.7)	Yes.
5 (EO 15)	Federal—Service	62.49 (25.29)	Yes.
6 (EO 16)	County Road ROW and Private	484.32 (196.0)	Yes.
7 (EO 17)	County Road ROW and Private	19.35 (7.83)	Yes.
8 (EO 22)	Private	1.04 (0.42)	Yes.
Total		691.3 (279.8)	

Note: Area sizes may not sum due to rounding.

We present brief descriptions of all units, and reasons why they meet the definition of critical habitat for prostrate milkweed below.

Unit 1: EO 3

Unit 1 consists of six areas, totaling 10.51 ac (4.25 ha), east of highway 83 in northwest Zapata County. This unit is on private land and unpaved county road ROWs. The unit is occupied by the species and contains one or more of the PBFs essential to the conservation of prostrate milkweed. Although we have no recent information on threats that affect this unit, we conclude that this unit is affected by invasive nonnative grass (buffelgrass) and road maintenance operations. Therefore, special management considerations may be required to reduce invasion of nonnative species and impacts from ROW maintenance.

Unit 2: EO 10

Unit 2 consists of 105.43 ac (42.67 ha) in the 699.4-acre Arroyo Ramirez tract of Lower Rio Grande Valley NWR. This unit is in southwestern Starr County adjacent to the Rio Grande on the U.S.-Mexico border. The entire unit is on land owned and managed by the Service. The unit is occupied by the species and contains one or more of the PBFs essential to the conservation of prostrate milkweed. This unit could be directly impacted by border barrier construction and security operations (*i.e.,* drag strips), or indirectly impacted by channeling of runoff along the barrier during heavy rainfall, in addition to invasion of buffelgrass. Therefore, special management may be required to mitigate impacts from border security operations and nonnative grass.

Unit 3: EO 11

Unit 3 consists of three areas, totaling 4.0 ac (1.62 ha), on private land in southwestern Starr County. The unit is occupied by the species and contains one or more of the PBFs essential to the conservation of prostrate milkweed. We have no recent information on threats that affect this unit.

Unit 4: EO 12

Unit 4 consists of 4.2 ac (1.7 ha) along an unpaved county road ROW in southwestern Starr County. This ROW supports a narrow strip of diverse native vegetation that has likely not been plowed, bulldozed, or graded. The unit is occupied by the species and contains one or more of the PBFs essential to the conservation of prostrate milkweed. This unit is affected by invasive nonnative grass (buffelgrass) and maintenance and operation of the county road. Therefore, special management may be required to reduce invasion of nonnative species.

Unit 5: EO 15

Unit 5 consists of 62.49 ac (25.29 ha) in the 90.8-acre Arroyo Morteros tract of the Lower Rio Grande Valley NWR. This unit is in southwestern Starr County adjacent to the Rio Grande on the U.S.-Mexico border. The entire unit is on land owned and managed by the Service. The unit is occupied by the species and contains one or more of the PBFs essential to the conservation of prostrate milkweed. This unit could be directly impacted by border barrier construction and security operations (*i.e.,* drag strips), or indirectly impacted by channeling of runoff along the barrier during heavy rainfall, in addition to invasion of buffelgrass. Therefore, special management may be required to mitigate impacts from border security operations and nonnative grass.

Unit 6: EO 16

Unit 6 consists of 484.32 ac (196.0 ha) entirely on the 488.5-acre private Martinez Ranch and along a county road ROW. This unit is in southern Starr County. The owner of the Martinez Ranch is a willing conservation partner in managing the property's native plants and wildlife. The unit is occupied by the species and contains one or more of the PBFs essential to the conservation of prostrate milkweed. This unit is affected by invasive nonnative grass (buffelgrass). Therefore, special management may be required to reduce invasion of nonnative species.

Unit 7: EO 17

Unit 7 consists of 19.35 ac (7.83 ha) along both sides of an unpaved county road ROW and adjacent private land in western Starr County. This ROW supports a narrow strip of diverse native vegetation that has likely not been plowed, bulldozed, or graded. The unit is occupied by the species and contains one or more of the PBFs essential to the conservation of prostrate milkweed. This unit is affected by invasive nonnative grass (buffelgrass) and maintenance and operation of the county road. Therefore, special management may be required to reduce invasion of nonnative species.

Unit 8: EO 22

Unit 8 consists of 1.04 ac (0.42 ha) on private land in central Zapata County. The unit is occupied by the species and contains one or more of the PBFs essential to the conservation of prostrate milkweed. Although we have no recent information about threats that affect this unit, we estimate that this unit is

affected by invasive nonnative grass (buffelgrass) and development and maintenance of oil and gas wells and utility corridors. Therefore, special management may be required to reduce invasion of nonnative species and impacts from ROW construction and maintenance from energy development and road and utility construction.

Effects of Critical Habitat Designation

Section 7 Consultation

Section 7(a)(2) of the Act requires Federal agencies, including the Service, to ensure that any action they fund, authorize, or carry out is not likely to jeopardize the continued existence of any endangered species or threatened species or result in the destruction or adverse modification of designated critical habitat of such species. In addition, section 7(a)(4) of the Act requires Federal agencies to confer with the Service on any agency action that is likely to jeopardize the continued existence of any species proposed to be listed under the Act or result in the destruction or adverse modification of proposed critical habitat.

We published a final rule revising the definition of destruction or adverse modification on August 27, 2019 (84 FR 44976). Destruction or adverse modification means a direct or indirect alteration that appreciably diminishes the value of critical habitat as a whole for the conservation of a listed species.

If a Federal action may affect a listed species or its critical habitat, the responsible Federal agency (action agency) must enter into consultation with us. Examples of actions that are subject to the section 7 consultation process are actions on State, Tribal, local, or private lands that require a Federal permit (such as a permit from the U.S. Army Corps of Engineers under section 404 of the Clean Water Act (33 U.S.C. 1251 *et seq.*) or a permit from the Service under section 10 of the Act) or that involve some other Federal action (such as funding from the Federal Highway Administration, Federal Aviation Administration, or the Federal Emergency Management Agency). Federal actions not affecting listed species or critical habitat—and actions on State, Tribal, local, or private lands that are not federally funded, authorized, or carried out by a Federal agency—do not require section 7 consultation.

Compliance with the requirements of section 7(a)(2) is documented through our issuance of:

(1) A concurrence letter for Federal actions that may affect, but are not likely to adversely affect, listed species or critical habitat; or

(2) A biological opinion for Federal actions that may affect, and are likely to adversely affect, listed species or critical habitat.

When we issue a biological opinion concluding that a project is likely to jeopardize the continued existence of a listed species and/or destroy or adversely modify critical habitat, we provide reasonable and prudent alternatives to the project, if any are identifiable, that would avoid the likelihood of jeopardy and/or destruction or adverse modification of critical habitat. We define ''reasonable and prudent alternatives'' (at 50 CFR 402.02) as alternative actions identified during consultation that:

(1) Can be implemented in a manner consistent with the intended purpose of the action,

(2) Can be implemented consistent with the scope of the Federal agency's legal authority and jurisdiction,

(3) Are economically and technologically feasible, and

(4) Would, in the Service Director's opinion, avoid the likelihood of jeopardizing the continued existence of the listed species and/or avoid the likelihood of destroying or adversely modifying critical habitat.

Reasonable and prudent alternatives can vary from slight project modifications to extensive redesign or relocation of the project. Costs associated with implementing a reasonable and prudent alternative are similarly variable.

Regulations at 50 CFR 402.16 set forth requirements for Federal agencies to reinitiate formal consultation on previously reviewed actions. These requirements apply when the Federal agency has retained discretionary involvement or control over the action (or the agency's discretionary involvement or control is authorized by law) and, if subsequent to the previous consultation: (1) If the amount or extent of taking specified in the incidental take statement is exceeded; (2) if new information reveals effects of the action that may affect listed species or critical habitat in a manner or to an extent not previously considered; (3) if the identified action is subsequently modified in a manner that causes an effect to the listed species or critical habitat that was not considered in the biological opinion; or (4) if a new species is listed or critical habitat designated that may be affected by the identified action. In such situations, Federal agencies sometimes may need to request reinitiation of consultation with us, but the regulations also specify some exceptions to the requirement to reinitiate consultation on specific land management plans after subsequently listing a new species or designating new critical habitat. See the regulations for a description of those exceptions.

Application of the ''Destruction or Adverse Modification'' Standard

The key factor related to the destruction or adverse modification determination is whether implementation of the proposed Federal action directly or indirectly alters the designated critical habitat in a way that appreciably diminishes the value of the critical habitat as a whole for the conservation of the listed species. As discussed above, the role of critical habitat is to support physical or biological features essential to the conservation of a listed species and provide for the conservation of the species.

Section 4(b)(8) of the Act requires us to briefly evaluate and describe, in any proposed or final regulation that designates critical habitat, activities involving a Federal action that may violate section 7(a)(2) of the Act by destroying or adversely modifying such habitat, or that may be affected by such designation.

Activities that the Service may, during a consultation under section 7(a)(2) of the Act, be considered likely to destroy or adversely modify critical habitat include, but are not limited to:

(1) Actions that would degrade or destroy native plant communities. Such activities could include, but are not limited to, road building, land clearing for oil and gas exploration or other purposes, introducing and encouraging the spread of nonnative species (*i.e.,* buffelgrass), and border security operations. However, above-ground cutting or thinning of woody plants and prescribed burning are recommended management practices for conservation of prostrate milkweed and other native grasses and forbs, and would not destroy or adversely modify critical habitats.

(2) Actions that would mechanically disturb the soil structure. Such activities could include, but are not limited to, bulldozing, root-plowing, ripping, excavating, or other mechanical operations that penetrate deep enough into the soil to cut or remove the tubers of prostrate milkweed.

(3) Actions that would increase competition from woody plants or introduced grasses. Such activities could include, but are not limited to, intentional planting of introduced grass species, such as buffelgrass, bermudagrass (*Cynodon dactylon*), or

Old World bluestems (introduced species of *Dichanthium* and *Bothriochloa*).

Exemptions

Application of Section 4(a)(3) of the Act

Section 4(a)(3)(B)(i) of the Act (16 U.S.C. 1533(a)(3)(B)(i)) provides that the Secretary shall not designate as critical habitat any lands or other geographical areas owned or controlled by the Department of Defense (DoD), or designated for its use, that are subject to an integrated natural resources management plan (INRMP) prepared under section 101 of the Sikes Act (16 U.S.C. 670a), if the Secretary determines in writing that such plan provides a benefit to the species for which critical habitat is proposed for designation. No DoD lands with a completed INRMP are within the proposed critical habitat designation.

Consideration of Impacts Under Section 4(b)(2) of the Act

Section 4(b)(2) of the Act states that the Secretary shall designate and make revisions to critical habitat on the basis of the best available scientific data after taking into consideration the economic impact, national security impact, and any other relevant impact of specifying any particular area as critical habitat. The Secretary may exclude an area from critical habitat if she determines that the benefits of such exclusion outweigh the benefits of specifying such area as part of the critical habitat, unless she determines, based on the best scientific data available, that the failure to designate such area as critical habitat will result in the extinction of the species. In making the determination to exclude a particular area, the statute on its face, as well as the legislative history, are clear that the Secretary has broad discretion regarding which factor(s) to use and how much weight to give to any factor.

Under section 4(b)(2) of the Act, we may exclude an area from designated critical habitat based on economic impacts, impacts on national security, or any other relevant impacts. In considering whether to exclude a particular area from the designation, we identify the benefits of including the area in the designation, identify the benefits of excluding the area from the designation, and evaluate whether the benefits of exclusion outweigh the benefits of inclusion. If the analysis indicates that the benefits of exclusion outweigh the benefits of inclusion, the Secretary may exercise discretion to exclude the area only if such exclusion would not result in the extinction of the species. We describe below the process that we undertook for taking into consideration each category of impacts and our analyses of the relevant impacts.

Consideration of Economic Impacts

Section 4(b)(2) of the Act and its implementing regulations require that we consider the economic impact that may result from a designation of critical habitat. To assess the probable economic impacts of a designation, we must first evaluate specific land uses or activities and projects that may occur in the area of the critical habitat. We then must evaluate the impacts that a specific critical habitat designation may have on restricting or modifying specific land uses or activities for the benefit of the species and its habitat within the areas proposed. We then identify which conservation efforts may be the result of the species being listed under the Act versus those attributed solely to the designation of critical habitat for this particular species. The probable economic impact of a proposed critical habitat designation is analyzed by comparing scenarios both ''with critical habitat'' and ''without critical habitat.''

The ''without critical habitat'' scenario represents the baseline for the analysis, which includes the existing regulatory and socio-economic burden imposed on landowners, managers, or other resource users potentially affected by the designation of critical habitat (*e.g.,* under the Federal listing as well as other Federal, State, and local regulations). Therefore, the baseline represents the costs of all efforts attributable to the listing of the species under the Act (*i.e.,* conservation of the species and its habitat incurred regardless of whether critical habitat is designated). The ''with critical habitat'' scenario describes the incremental impacts associated specifically with the designation of critical habitat for the species. The incremental conservation efforts and associated impacts would not be expected without the designation of critical habitat for the species. In other words, the incremental costs are those attributable solely to the designation of critical habitat, above and beyond the baseline costs. These are the costs we use when evaluating the benefits of inclusion and exclusion of particular areas from the final designation of critical habitat should we choose to conduct a discretionary 4(b)(2) exclusion analysis.

For this particular designation, we developed an incremental effects memorandum (IEM) considering the probable incremental economic impacts that may result from this proposed designation of critical habitat. The information contained in our IEM was then used to develop a screening analysis of the probable effects of the designation of critical habitat for the prostrate milkweed (Industrial Economics, Inc. (IEc) 2021, entire). We began by conducting a screening analysis of the proposed designation of critical habitat in order to focus our analysis on the key factors that are likely to result in incremental economic impacts. The purpose of the screening analysis is to filter out particular geographic areas of critical habitat that are already subject to such protections and are, therefore, unlikely to incur incremental economic impacts. In particular, the screening analysis considers baseline costs (*i.e.,* absent critical habitat designation) and includes any probable incremental economic impacts where land and water use may be subject to conservation plans, land management plans, best management practices, or regulations that protect the habitat area as a result of the Federal listing status of the species. Ultimately, the screening analysis allows us to focus our analysis on evaluating the specific areas or sectors that may incur probable incremental economic impacts as a result of the designation. If the proposed critical habitat designation contains any unoccupied units, the screening analysis assesses whether those units require additional management or conservation efforts that may incur incremental economic impacts. This screening analysis combined with the information contained in our IEM constitute what we consider to be our draft economic analysis (DEA) of the proposed critical habitat designation for the prostrate milkweed; our DEA is summarized in the narrative below.

Executive Orders (E.O.s) 12866 and 13563 direct Federal agencies to assess the costs and benefits of available regulatory alternatives in quantitative (to the extent feasible) and qualitative terms. Consistent with the E.O. regulatory analysis requirements, our effects analysis under the Act may take into consideration impacts to both directly and indirectly affected entities, where practicable and reasonable. If sufficient data are available, we assess to the extent practicable the probable impacts to both directly and indirectly affected entities. As part of our screening analysis, we considered the types of economic activities that are likely to occur within the areas likely affected by the critical habitat designation. In our evaluation of the probable incremental economic impacts

that may result from the proposed designation of critical habitat for the prostrate milkweed, first we identified, in the IEM dated March 11, 2021, probable incremental economic impacts associated with the following categories of activities: (1) Construction of a new highway; and (2) potential future border wall construction. We considered each industry or category individually. Additionally, we considered whether their activities have any Federal involvement. Critical habitat designation generally will not affect activities that do not have any Federal involvement; under the Act, designation of critical habitat only affects activities conducted, funded, permitted, or authorized by Federal agencies. If we list the species, in areas where the prostrate milkweed is present, Federal agencies would be required to consult with the Service under section 7 of the Act on activities they fund, permit, or implement that may affect the species. If, when we list the species, we also finalize this proposed critical habitat designation, our consultations would include an evaluation of measures to avoid the destruction or adverse modification of critical habitat.

In our IEM, we attempted to clarify the distinction between the effects that would result from the species being listed and those attributable to the critical habitat designation (*i.e.,* difference between the jeopardy and adverse modification standards) for the prostrate milkweed's critical habitat. Because the designation of critical habitat for prostrate milkweed was proposed concurrently with the listing, it has been our experience that it is more difficult to discern which conservation efforts are attributable to the species being listed and those which will result solely from the designation of critical habitat. However, the following specific circumstances in this case help to inform our evaluation: (1) The essential physical or biological features identified for critical habitat are the same features essential for the life requisites of the species, and (2) any actions that would result in sufficient harm or harassment to constitute jeopardy to the prostrate milkweed would also likely adversely affect the essential physical or biological features of critical habitat. The IEM outlines our rationale concerning this limited distinction between baseline conservation efforts and incremental impacts of the designation of critical habitat for this species. This evaluation of the incremental effects has been used as the basis to evaluate the probable incremental economic impacts of this proposed designation of critical habitat.

The proposed critical habitat designation for the prostrate milkweed includes eight units totaling 691.3 ac (279.8 ha). All units are considered occupied by the prostrate milkweed and contain the physical and biological features essential to the conservation of the species. We are not proposing to designate any units of unoccupied habitat. Approximately 24 percent of the proposed designation is located on Federal land, 4 percent is on county-owned ROWs, and 71 percent is on private land. In these areas, any actions that may affect the species or its habitat would also affect designated critical habitat, and it is unlikely that any additional conservation efforts would be recommended to address the adverse modification standard over and above those recommended as necessary to avoid jeopardizing the continued existence of prostrate milkweed. Therefore, the potential incremental economic effects of the critical habitat designation are expected to be limited to administrative costs.

While this additional analysis will require time and resources by both the Federal action agency and the Service, it is believed that, in most circumstances, these costs would predominantly be administrative in nature and would not be significant. Nearly all (97 percent) of the proposed critical habitat overlaps designated critical habitat for the endangered Zapata bladderpod (*Physaria thamnophila*). Proposed critical habitat also overlaps with designated critical habitat for the endangered ashy dogweed (*Thymophylla tephroleuca*) and star cactus (*Astrophytum asterias*). Because of the overall small size of the proposed critical habitat, there would likely only be a few consultations, with minor conservation efforts that would likely result in relatively low probable economic impacts. It is likely that the majority of costs would occur on two of the eight proposed critical habitat units, which are on Federal land (both are owned by the Service). Any potential future border wall construction has been paused at this time.

The probable incremental economic impacts of the prostrate milkweed critical habitat designation are expected to be limited to additional administrative effort as well as minor costs of conservation efforts resulting from a small number of future section 7 consultations. This is due to the fact that all of the proposed critical habitat areas are considered to be occupied by the species, and incremental economic impacts of critical habitat designation, other than administrative costs, are unlikely. The entities most likely to incur incremental costs are parties to section 7 consultations, including Federal action agencies and, in some cases, third parties, most frequently State agencies or municipalities. Activities we expect would be subject to consultations that may involve private entities as third parties are residential and commercial development that may occur on private lands. However, based on coordination efforts with State and local agencies, the cost to private entities within these sectors is expected to be relatively minor. We would expect no more than 1 formal consultation, 10 information consultations, and 17 technical assistance efforts to occur annually over the next year in proposed critical habitat areas for the prostrate milkweed, with annual costs to the Service and action agencies of less than $37,800. Thus, the annual administrative burden is unlikely to reach $100 million, which is the threshold for a significant regulatory action under E.O. 12866.

We are soliciting data and comments from the public on the DEA discussed above, as well as on all aspects of this proposed rule and our required determinations. During the development of a final designation, we will consider the information presented in the DEA and any additional information on economic impacts we receive during the public comment period to determine whether any specific areas should be excluded from the final critical habitat designation under authority of section 4(b)(2) and our implementing regulations at 50 CFR 17.90. If we receive credible information regarding the existence of a meaningful economic or other relevant impact supporting a benefit of exclusion, we will conduct an exclusion analysis for the relevant area or areas. We may also exercise the discretion to evaluate any other particular areas for possible exclusion. Furthermore, when we conduct an exclusion analysis based on impacts identified by experts in, or sources with firsthand knowledge about, impacts that are outside the scope of the Service's expertise, we will give weight to those impacts consistent with the expert or firsthand information unless we have rebutting information. We may exclude an area from critical habitat if we determine that the benefits of excluding the area outweigh the benefits of including the area, provided the exclusion will not result in the extinction of this species.

Consideration of National Security Impacts

Section 4(a)(3)(B)(i) of the Act may not cover all DoD lands or areas that pose potential national-security concerns (*e.g.,* a DoD installation that is in the process of revising its INRMP for a newly listed species or a species previously not covered). If a particular area is not covered under section 4(a)(3)(B)(i), then national-security or homeland-security concerns are not a factor in the process of determining what areas meet the definition of ''critical habitat.'' However, the Service must still consider impacts on national security, including homeland security, on those lands or areas not covered by section 4(a)(3)(B)(i), because section 4(b)(2) requires the Service to consider those impacts whenever it designates critical habitat. Accordingly, if DoD, Department of Homeland Security (DHS), or another Federal agency has requested exclusion based on an assertion of national-security or homeland-security concerns, or we have otherwise identified national-security or homeland-security impacts from designating particular areas as critical habitat, we generally have reason to consider excluding those areas.

However, we cannot automatically exclude requested areas. When DoD, DHS, or another Federal agency requests exclusion from critical habitat on the basis of national-security or homeland-security impacts, we must conduct an exclusion analysis if the Federal requester provides credible information, including a reasonably specific justification of an incremental impact on national security that would result from the designation of that specific area as critical habitat. That justification could include demonstration of probable impacts, such as impacts to ongoing border-security patrols and surveillance activities, or a delay in training or facility construction, as a result of compliance with section 7(a)(2) of the Act. If the agency requesting the exclusion does not provide us with a reasonably specific justification, we will contact the agency to recommend that it provide a specific justification or clarification of its concerns relative to the probable incremental impact that could result from the designation. If we conduct an exclusion analysis because the agency provides a reasonably specific justification or because we decide to exercise the discretion to conduct an exclusion analysis, we will defer to the expert judgment of DoD, DHS, or another Federal agency as to: (1) Whether activities on its lands or waters, or its activities on other lands or waters, have national-security or homeland-security implications; (2) the importance of those implications; and (3) the degree to which the cited implications would be adversely affected in the absence of an exclusion. In that circumstance, in conducting a discretionary section 4(b)(2) exclusion analysis, we will give great weight to national-security and homeland-security concerns in analyzing the benefits of exclusion.

Under section 4(b)(2) of the Act, we also consider whether a national-security or homeland-security impact might exist on lands owned or managed by DoD or DHS, or on any other lands. In preparing this proposal, we have determined that the lands within the proposed designation of critical habitat for prostrate milkweed are not owned or managed by DoD or DHS. Although two proposed units of critical habitat are located along the border, we do not anticipate that there will be an impact on national security or homeland security. We will work with CBP to ensure appropriate collaboration in our national security and conservation efforts. However, if through the public comment period we receive credible information regarding impacts on national security or homeland security from designating particular areas as critical habitat, then as part of developing the final designation of critical habitat, we will conduct a discretionary exclusion analysis to determine whether to exclude those areas under authority of section 4(b)(2) and our implementing regulations at 50 CFR 17.90.

Consideration of Other Relevant Impacts

Under section 4(b)(2) of the Act, we consider any other relevant impacts, in addition to economic impacts and impacts on national security discussed above. Other relevant impacts may include, but are not limited to, impacts to Tribes, States, local governments, public health and safety, community interests, the environment (such as increased risk of wildfire or pest and invasive species management), Federal lands, and conservation plans, agreements, or partnerships. To identify other relevant impacts that may affect the exclusion analysis, we consider a number of factors, including whether there are permitted conservation plans covering the species in the area—such as HCPs, safe harbor agreements (SHAs), or candidate conservation agreements with assurances (CCAAs)—or whether there are non-permitted conservation agreements and partnerships that may be impaired by designation of, or exclusion from, critical habitat. In addition, we look at whether Tribal conservation plans or partnerships, Tribal resources, or government-to-government relationships of the United States with Tribal entities may be affected by the designation. We also consider any State, local, public-health, community-interest, environmental, or social impacts that might occur because of the designation.

We have not identified any areas to consider for exclusion from critical habitat based on other relevant impacts because areas included in the proposed critical habitat are not covered under any permitted conservation plans (*i.e.,* SHAs), CCAAs, non-permitted conservation agreements and partnerships, Tribal conservation plans or partnerships, or have any State, local, public-health, community-interest, environmental, or social impacts.

However, during the development of a final designation, we will consider all information currently available or received during the public comment period. If we receive credible information regarding the existence of a meaningful impact supporting a benefit of excluding any areas, we will undertake an exclusion analysis and determine whether those areas should be excluded from the final critical habitat designation under the authority of section 4(b)(2) and our implementing regulations at 50 CFR 17.90. We may also exercise the discretion to undertake exclusion analyses for other areas as well, and we will describe all of our exclusion analyses as part of a final critical habitat determination.

Summary of Exclusions Considered Under 4(b)(2) of the Act

At this time, we are not considering any exclusions from the proposed designation based on economic impacts, national security impacts, or other relevant impacts—such as partnerships, management, or protection afforded by cooperative management efforts—under section 4(b)(2) of the Act. In this proposed rule, we are seeking credible information from the public regarding the existence of a meaningful impact supporting a benefit of excluding any areas that would be used in an exclusion analysis that may result in the exclusion of areas from the final critical habitat designation. (Please see **FOR FURTHER INFORMATION CONTACT** for instructions on how to submit comments).

Required Determinations

Clarity of the Rule

We are required by Executive Orders 12866 and 12988 and by the Presidential Memorandum of June 1, 1998, to write all rules in plain language. This means that each rule we publish must:

(1) Be logically organized;

(2) Use the active voice to address readers directly;

(3) Use clear language rather than jargon;

(4) Be divided into short sections and sentences; and

(5) Use lists and tables wherever possible.

If you feel that we have not met these requirements, send us comments by one of the methods listed in **ADDRESSES**. To better help us revise the rule, your comments should be as specific as possible. For example, you should tell us the numbers of the sections or paragraphs that are unclearly written, which sections or sentences are too long, the sections where you feel lists or tables would be useful, etc.

Regulatory Planning and Review (Executive Orders 12866 and 13563)

Executive Order 12866 provides that the Office of Information and Regulatory Affairs (OIRA) in the Office of Management and Budget will review all significant rules. OIRA has determined that this rule is not significant.

Executive Order 13563 reaffirms the principles of E.O. 12866 while calling for improvements in the Nation's regulatory system to promote predictability, to reduce uncertainty, and to use the best, most innovative, and least burdensome tools for achieving regulatory ends. The Executive order directs agencies to consider regulatory approaches that reduce burdens and maintain flexibility and freedom of choice for the public where these approaches are relevant, feasible, and consistent with regulatory objectives. E.O. 13563 emphasizes further that regulations must be based on the best available science and that the rulemaking process must allow for public participation and an open exchange of ideas. We have developed this proposed rule in a manner consistent with these requirements.

Regulatory Flexibility Act (5 U.S.C. 601 et seq.)

Under the Regulatory Flexibility Act (RFA; 5 U.S.C. 601 *et seq.*), as amended by the Small Business Regulatory Enforcement Fairness Act of 1996 (SBREFA; 5 U.S.C. 801 *et seq.*), whenever an agency is required to publish a notice of rulemaking for any proposed or final rule, it must prepare and make available for public comment a regulatory flexibility analysis that describes the effects of the rule on small entities (*i.e.,* small businesses, small organizations, and small government jurisdictions). However, no regulatory flexibility analysis is required if the head of the agency certifies the rule will not have a significant economic impact on a substantial number of small entities. The SBREFA amended the RFA to require Federal agencies to provide a certification statement of the factual basis for certifying that the rule will not have a significant economic impact on a substantial number of small entities.

According to the Small Business Administration, small entities include small organizations such as independent nonprofit organizations; small governmental jurisdictions, including school boards and city and town governments that serve fewer than 50,000 residents; and small businesses (13 CFR 121.201). Small businesses include manufacturing and mining concerns with fewer than 500 employees, wholesale trade entities with fewer than 100 employees, retail and service businesses with less than $5 million in annual sales, general and heavy construction businesses with less than $27.5 million in annual business, special trade contractors doing less than $11.5 million in annual business, and agricultural businesses with annual sales less than $750,000. To determine whether potential economic impacts to these small entities are significant, we considered the types of activities that might trigger regulatory impacts under this designation as well as types of project modifications that may result. In general, the term ''significant economic impact'' is meant to apply to a typical small business firm's business operations.

Under the RFA, as amended, and as understood in light of recent court decisions, Federal agencies are required to evaluate the potential incremental impacts of rulemaking on those entities directly regulated by the rulemaking itself; in other words, the RFA does not require agencies to evaluate the potential impacts to indirectly regulated entities. The regulatory mechanism through which critical habitat protections are realized is section 7 of the Act, which requires Federal agencies, in consultation with the Service, to ensure that any action authorized, funded, or carried out by the agency is not likely to destroy or adversely modify critical habitat. Therefore, under section 7, only Federal action agencies are directly subject to the specific regulatory requirement (avoiding destruction and adverse modification) imposed by critical habitat designation. Consequently, it is our position that only Federal action agencies would be directly regulated if we adopt the proposed critical habitat designation. The RFA does not require evaluation of the potential impacts to entities not directly regulated. Moreover, Federal agencies are not small entities. Therefore, because no small entities would be directly regulated by this rulemaking, the Service certifies that, if made final as proposed, the proposed critical habitat designation will not have a significant economic impact on a substantial number of small entities.

In summary, we have considered whether the proposed designation would result in a significant economic impact on a substantial number of small entities. For the above reasons and based on currently available information, we certify that, if made final, the proposed critical habitat designation would not have a significant economic impact on a substantial number of small business entities. Therefore, an initial regulatory flexibility analysis is not required.

Energy Supply, Distribution, or Use—Executive Order 13211

Executive Order 13211 (Actions Concerning Regulations That Significantly Affect Energy Supply, Distribution, or Use) requires agencies to prepare Statements of Energy Effects when undertaking certain actions. In our economic analysis, we did not find that this proposed critical habitat designation would significantly affect energy supplies, distribution, or use. Therefore, this action is not a significant energy action, and no Statement of Energy Effects is required.

Unfunded Mandates Reform Act (2 U.S.C. 1501 et seq.)

In accordance with the Unfunded Mandates Reform Act (2 U.S.C. 1501 *et seq.*), we make the following finding:

(1) This proposed rule would not produce a Federal mandate. In general, a Federal mandate is a provision in legislation, statute, or regulation that would impose an enforceable duty upon State, local, or Tribal governments, or the private sector, and includes both ''Federal intergovernmental mandates'' and ''Federal private sector mandates.'' These terms are defined in 2 U.S.C. 658(5)–(7). ''Federal intergovernmental mandate'' includes a regulation that ''would impose an enforceable duty upon State, local, or Tribal governments'' with two exceptions. It

excludes ''a condition of Federal assistance.'' It also excludes ''a duty arising from participation in a voluntary Federal program,'' unless the regulation ''relates to a then-existing Federal program under which $500,000,000 or more is provided annually to State, local, and Tribal governments under entitlement authority,'' if the provision would ''increase the stringency of conditions of assistance'' or ''place caps upon, or otherwise decrease, the Federal Government's responsibility to provide funding,'' and the State, local, or Tribal governments ''lack authority'' to adjust accordingly. At the time of enactment, these entitlement programs were: Medicaid; Aid to Families with Dependent Children work programs; Child Nutrition; Food Stamps; Social Services Block Grants; Vocational Rehabilitation State Grants; Foster Care, Adoption Assistance, and Independent Living; Family Support Welfare Services; and Child Support Enforcement. ''Federal private sector mandate'' includes a regulation that ''would impose an enforceable duty upon the private sector, except (i) a condition of Federal assistance or (ii) a duty arising from participation in a voluntary Federal program.''

The designation of critical habitat does not impose a legally binding duty on non-Federal Government entities or private parties. Under the Act, the only regulatory effect is that Federal agencies must ensure that their actions do not destroy or adversely modify critical habitat under section 7. While non-Federal entities that receive Federal funding, assistance, or permits, or that otherwise require approval or authorization from a Federal agency for an action, may be indirectly impacted by the designation of critical habitat, the legally binding duty to avoid destruction or adverse modification of critical habitat rests squarely on the Federal agency. Furthermore, to the extent that non-Federal entities are indirectly impacted because they receive Federal assistance or participate in a voluntary Federal aid program, the Unfunded Mandates Reform Act would not apply, nor would critical habitat shift the costs of the large entitlement programs listed above onto State governments.

(2) We do not believe that this rule would significantly or uniquely affect small governments because it will not produce a Federal mandate of $100 million or greater in any year, that is, it is not a ''significant regulatory action'' under the Unfunded Mandates Reform Act. The designation of critical habitat imposes no obligations on State or local governments. Therefore, a Small Government Agency Plan is not required.

Takings—Executive Order 12630

In accordance with E.O. 12630 (Government Actions and Interference with Constitutionally Protected Private Property Rights), we have analyzed the potential takings implications of designating critical habitat for prostrate milkweed in a takings implications assessment. The Act does not authorize the Service to regulate private actions on private lands or confiscate private property as a result of critical habitat designation. Designation of critical habitat does not affect land ownership, or establish any closures, or restrictions on use of or access to the designated areas. Furthermore, the designation of critical habitat does not affect landowner actions that do not require Federal funding or permits, nor does it preclude development of habitat conservation programs or issuance of incidental take permits to permit actions that do require Federal funding or permits to go forward. However, Federal agencies are prohibited from carrying out, funding, or authorizing actions that would destroy or adversely modify critical habitat. A takings implications assessment has been completed for the proposed designation of critical habitat for prostrate milkweed, and it concludes that, if adopted, this designation of critical habitat does not pose significant takings implications for lands within or affected by the designation.

Federalism—Executive Order 13132

In accordance with E.O. 13132 (Federalism), this proposed rule does not have significant federalism effects. A federalism summary impact statement is not required. In keeping with Department of the Interior and Department of Commerce policy, we requested information from, and coordinated development of this proposed critical habitat designation with, appropriate State resource agencies. From a federalism perspective, the designation of critical habitat directly affects only the responsibilities of Federal agencies. The Act imposes no other duties with respect to critical habitat, either for States and local governments, or for anyone else. As a result, the proposed rule does not have substantial direct effects either on the States, or on the relationship between the national government and the States, or on the distribution of powers and responsibilities among the various levels of government. The proposed designation may have some benefit to these governments because the areas that contain the features essential to the conservation of the species are more clearly defined, and the physical or biological features of the habitat necessary for the conservation of the species are specifically identified. This information does not alter where and what federally sponsored activities may occur. However, it may assist State and local governments in long-range planning because they no longer have to wait for case-by-case section 7 consultations to occur.

Where State and local governments require approval or authorization from a Federal agency for actions that may affect critical habitat, consultation under section 7(a)(2) of the Act would be required. While non-Federal entities that receive Federal funding, assistance, or permits, or that otherwise require approval or authorization from a Federal agency for an action, may be indirectly impacted by the designation of critical habitat, the legally binding duty to avoid destruction or adverse modification of critical habitat rests squarely on the Federal agency.

Civil Justice Reform—Executive Order 12988

In accordance with Executive Order 12988 (Civil Justice Reform), the Office of the Solicitor has determined that the rule would not unduly burden the judicial system and that it meets the requirements of sections 3(a) and 3(b)(2) of the order. We have proposed designating critical habitat in accordance with the provisions of the Act. To assist the public in understanding the habitat needs of the species, this proposed rule identifies the physical or biological features essential to the conservation of the species. The proposed areas of designated critical habitat are presented on maps, and the proposed rule provides several options for the interested public to obtain more detailed location information, if desired.

Paperwork Reduction Act of 1995 (44 U.S.C. 3501 et seq.)

This rule does not contain information collection requirements, and a submission to the Office of Management and Budget (OMB) under the Paperwork Reduction Act of 1995 (44 U.S.C. 3501 *et seq.*) is not required. We may not conduct or sponsor and you are not required to respond to a collection of information unless it displays a currently valid OMB control number.

National Environmental Policy Act (42 U.S.C. 4321 et seq.)

It is our position that, outside the jurisdiction of the U.S. Court of Appeals for the Tenth Circuit, we do not need to

prepare environmental analyses pursuant to the National Environmental Policy Act (NEPA; 42 U.S.C. 4321 *et seq.*) in connection with regulations adopted pursuant to section 4(a) of the Act. We published a notice outlining our reasons for this determination in the **Federal Register** on October 25, 1983 (48 FR 49244). This position was upheld by the U.S. Court of Appeals for the Ninth Circuit (*Douglas County* v. *Babbitt,* 48 F.3d 1495 (9th Cir. 1995), cert. denied 516 U.S. 1042 (1996)).

Government-to-Government Relationship With Tribes

In accordance with the President's memorandum of April 29, 1994 (Government-to-Government Relations with Native American Tribal Governments; 59 FR 22951), Executive Order 13175 (Consultation and Coordination with Indian Tribal Governments), and the Department of the Interior's manual at 512 DM 2, we readily acknowledge our responsibility to communicate meaningfully with recognized Federal Tribes on a government-to-government basis. In accordance with Secretarial Order 3206 of June 5, 1997 (American Indian Tribal Rights, Federal-Tribal Trust Responsibilities, and the Endangered Species Act), we readily acknowledge our responsibilities to work directly with Tribes in developing programs for healthy ecosystems, to acknowledge that Tribal lands are not subject to the same controls as Federal public lands, to remain sensitive to Indian culture, and to make information available to Tribes. We have determined that no Tribal lands fall within the boundaries of the proposed critical habitat for the prostrate milkweed, so no Tribal lands would be affected by the proposed designation.

References Cited

A complete list of references cited in this rulemaking is available on the internet at *https://www.regulations.gov* and upon request from the Texas Coastal Ecological Services Field Office (see **FOR FURTHER INFORMATION CONTACT**).

Authors

The primary authors of this proposed rule are the staff members of the U.S. Fish and Wildlife Service's Species Assessment Team and the Texas Coastal Ecological Services Field Office.

List of Subjects in 50 CFR Part 17

Endangered and threatened species, Exports, Imports, Reporting and recordkeeping requirements, Transportation.

Proposed Regulation Promulgation

Accordingly, we propose to amend part 17, subchapter B of chapter I, title 50 of the Code of Federal Regulations, as set forth below:

PART 17—ENDANGERED AND THREATENED WILDLIFE AND PLANTS

■ 1. The authority citation for part 17 continues to read as follows:

Authority: 16 U.S.C. 1361–1407; 1531–1544; and 4201–4245, unless otherwise noted.

■ 2. Amend § 17.12(h) by adding an entry for ''*Asclepias prostrata*'' to the List of Endangered and Threatened Plants in alphabetical order under FLOWERING PLANTS to read as follows:

§ 17.12 Endangered and threatened plants.

* * * * *

(h) * * *

Scientific name	Common name	Where listed	Status	Listing citations and applicable rules
FLOWERING PLANTS				
*	*	*	*	*
Asclepias prostrata	Prostrate milkweed	Wherever found	E	[**Federal Register** citation when published as a final rule]; 50 CFR 17.96(a).[CH]
*	*	*	*	*

■ 3. Amend § 17.96(a) by adding an entry for ''Family Apocynaceae: *Asclepias prostrata* (Prostrate Milkweed)'' after the entry for ''Family Apiaceae: *Lomatium cookii* (Cook's lomatium, Cook's desert parsley)'' to read as follows:

§ 17.96 Critical habitat—plants.

(a) * * *

Family Apocynaceae: *Asclepias prostrata* (Prostrate Milkweed)

(1) Critical habitat units are depicted for Starr and Zapata Counties, Texas, on the maps in this entry.

(2) Within these areas, the physical or biological features essential to the conservation of *Asclepias prostrata* consist of the following components:

(i) Well-drained sandy soil overlying strata of sandstone or indurated caliche;

(ii) High soil gypsum concentration;

(iii) Open savannas and grasslands of the Tamaulipan shrubland ecological region;

(iv) Vegetation composition that includes abundant, diverse pollen and nectar plants and healthy populations of native bee and wasp species; and

(v) Less than 20 percent cover of *Pennisetum ciliare* (buffelgrass).

(3) Critical habitat does not include manmade structures (such as buildings, aqueducts, runways, roads, and other paved areas) and the land on which they are located existing within the legal boundaries on [EFFECTIVE DATE OF RULE].

(4) Data layers defining map units were created using Texas Natural Diversity Database (2019–2020) survey data of the documented *Asclepias prostrata* locations in the United States to determine the geological formations and soil types they occupy.

(i) We used the Esri ArcMap software to overlay the geographic coordinates of populations on a digitized map of Texas surface geology and a digitized soil survey map. We then clipped those areas of potential to lands that have documented populations of *Asclepias prostrata.*

(ii) The maps in this entry, as modified by any accompanying regulatory text, establish the boundaries of the critical habitat designation. The coordinates or plot points or both on which each map is based are available to the public at the Service's internet site at *https://www.fws.gov/southwest/es/TexasCoastal/,* at *https://www.regulations.gov* at Docket No. FWS–R2–ES–2021–0041, and at the field office responsible for this designation. You may obtain field office location information by contacting one of the Service regional offices, the addresses of which are listed at 50 CFR 2.2.

(5) Note: Index map follows:

BILLING CODE 4333–15–P

Figure 1 to Family Apocynaceae: *Asclepias prostrata* (Prostrate Milkweed) paragraph (5)

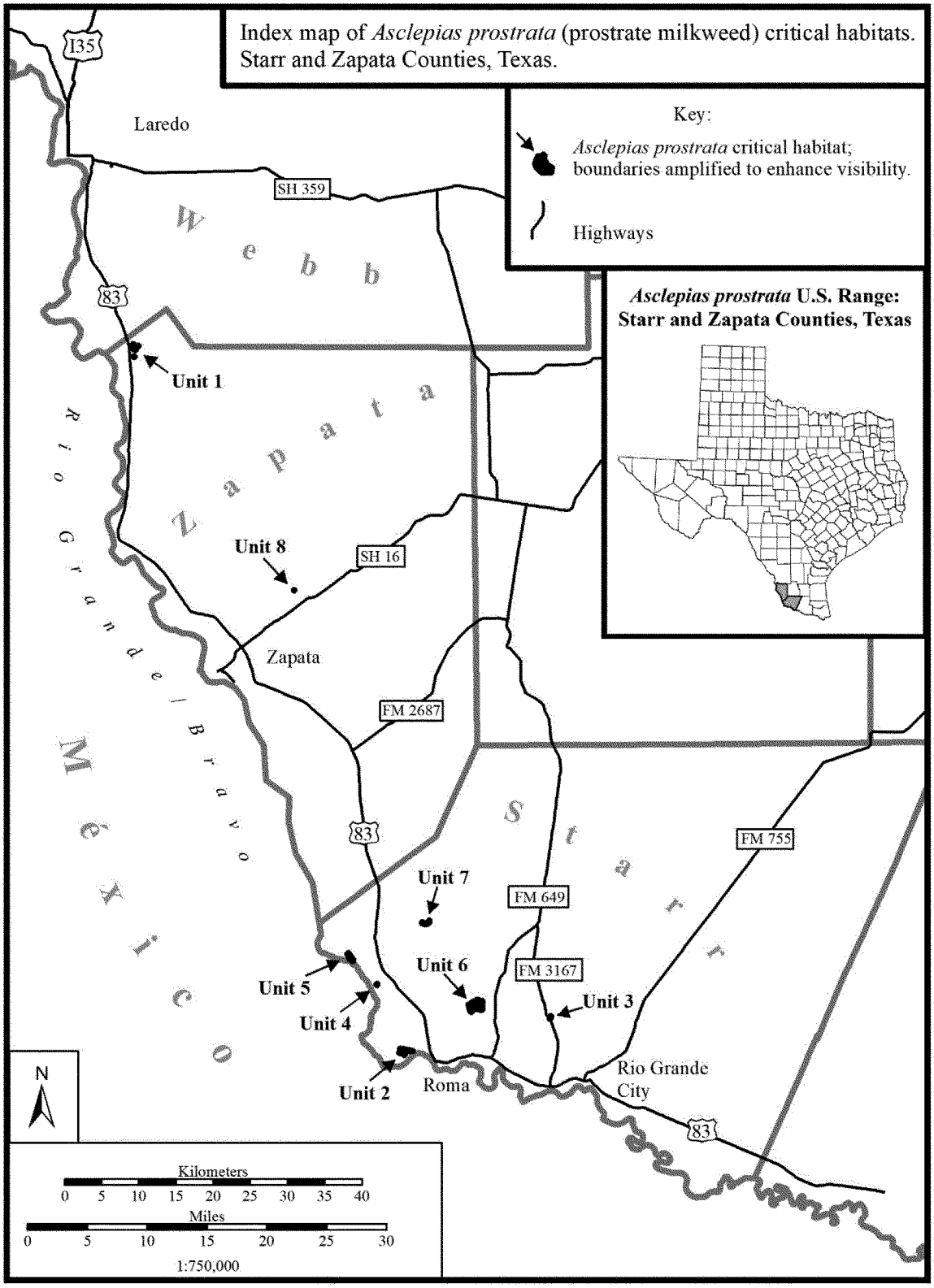

(6) Unit 1: Zapata County, Texas.

(i) Unit 1 consists of 6 areas totaling 10.51 ac (4.25 ha) east of highway 83 in northwest Zapata County. This unit is on private land and a county road right of way.

(ii) Map of Unit 1 follows:

Figure 2 to Family Apocynaceae: *Asclepias prostrata* (Prostrate Milkweed) paragraph (6)(ii)

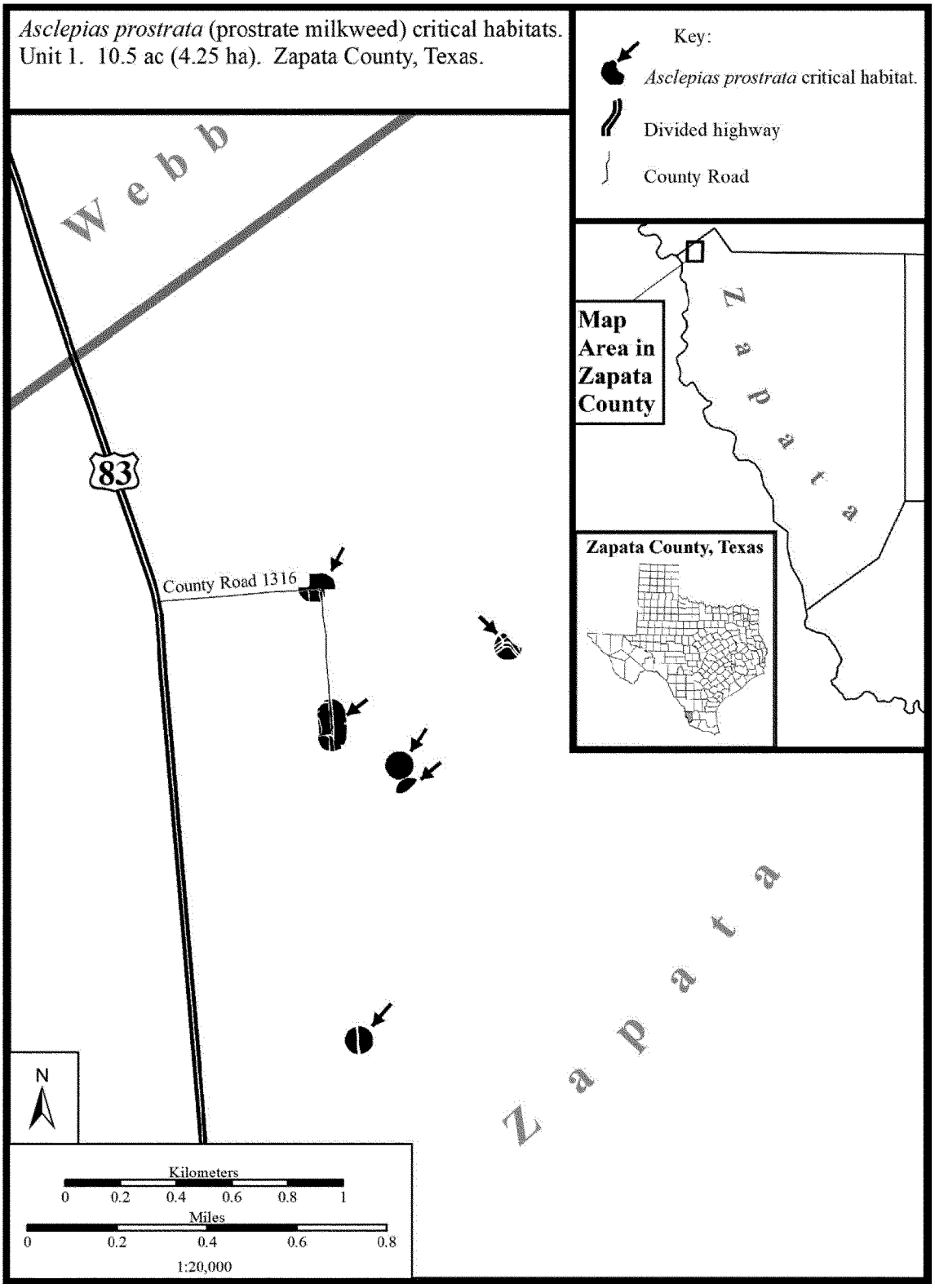

(7) Unit 2: Starr County, Texas.

(i) Unit 2 consists of 105.43 ac (42.67 ha) in the Arroyo Ramirez tract of Lower Rio Grande Valley National Wildlife Refuge. This unit is in southwestern Starr County adjacent to the Rio Grande on the U.S.-Mexico border. The entire unit is on land owned and managed by the Service.

(ii) Map of Unit 2 follows:

Figure 3 to Family Apocynaceae: *Asclepias prostrata* (Prostrate Milkweed) paragraph (7)(ii)

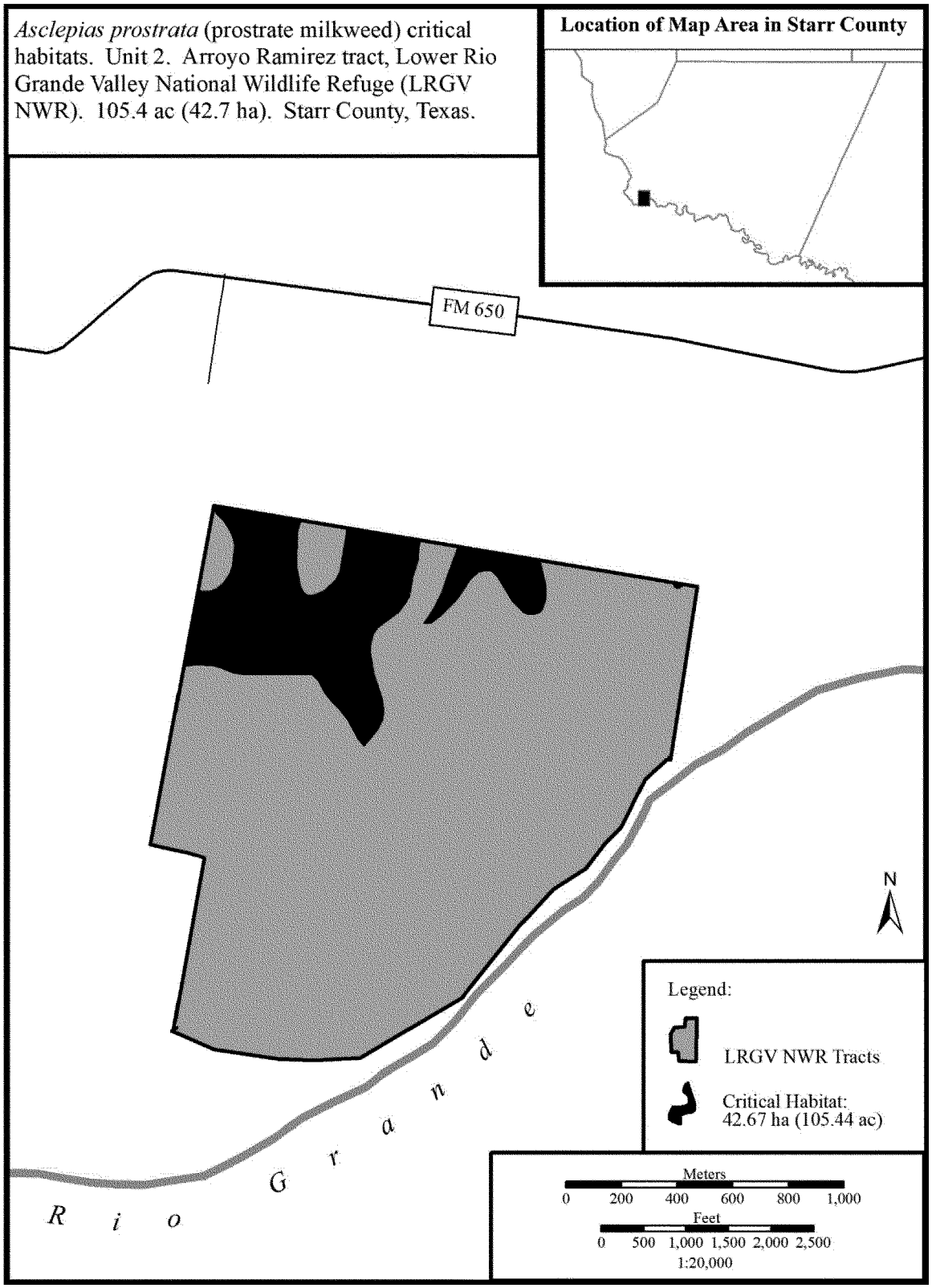

(8) Unit 3: Starr County, Texas.

(i) Unit 3 consists of 4.0 ac (1.62 ha) along both sides of a road right of way on private land in southern Starr County.

(ii) Map of Unit 3 follows:

Figure 4 to Family Apocynaceae: *Asclepias prostrata* (Prostrate Milkweed) paragraph (8)(ii)

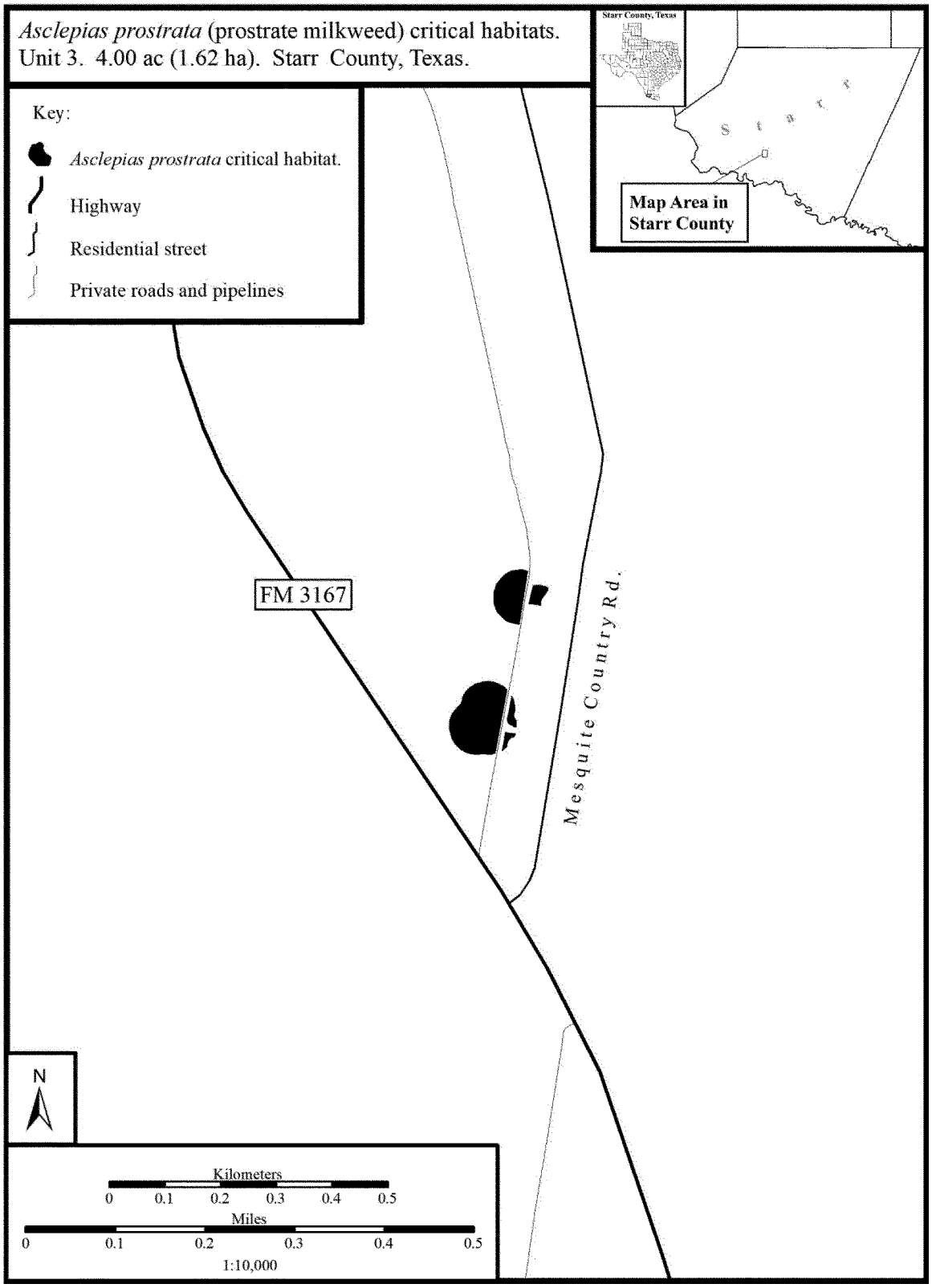

(9) Unit 4: Starr County, Texas.

(i) Unit 4 consists of 4.2 ac (1.7 ha) along the unpaved right of way of Los Arrieros Loop, a county road in southwestern Starr County.

(ii) Map of Unit 4 follows:

Figure 5 to Family Apocynaceae: *Asclepias prostrata* (Prostrate Milkweed) paragraph (9)(ii)

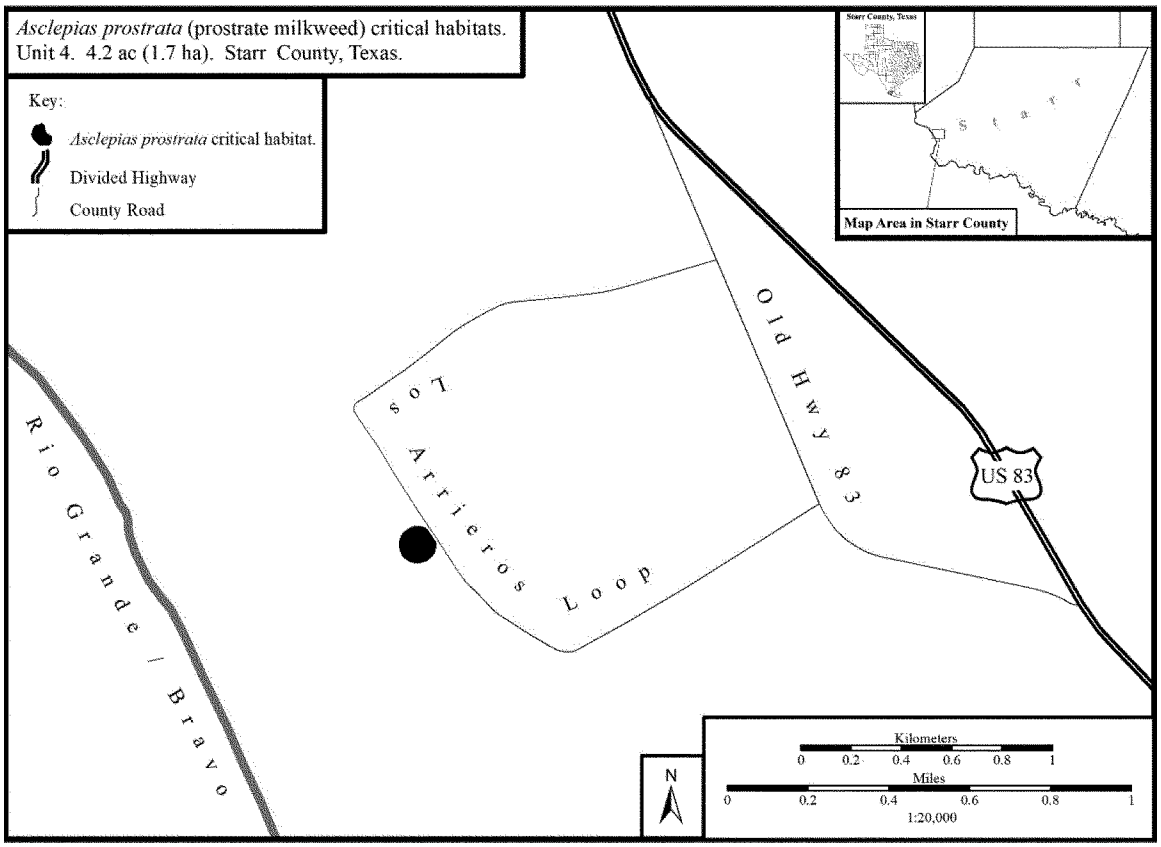

(10) Unit 5: Starr County, Texas.

(i) Unit 5 consists of 62.49 ac (25.29 ha) in the Arroyo Morteros tract of the Lower Rio Grande Valley National Wildlife Refuge. This unit is in western Starr County adjacent to the Rio Grande on the U.S.-Mexico border. The entire unit is on land owned and managed by the Service.

(ii) Map of Unit 5 follows:

Figure 6 to Family Apocynaceae: *Asclepias prostrata* (Prostrate Milkweed) paragraph (10)(ii)

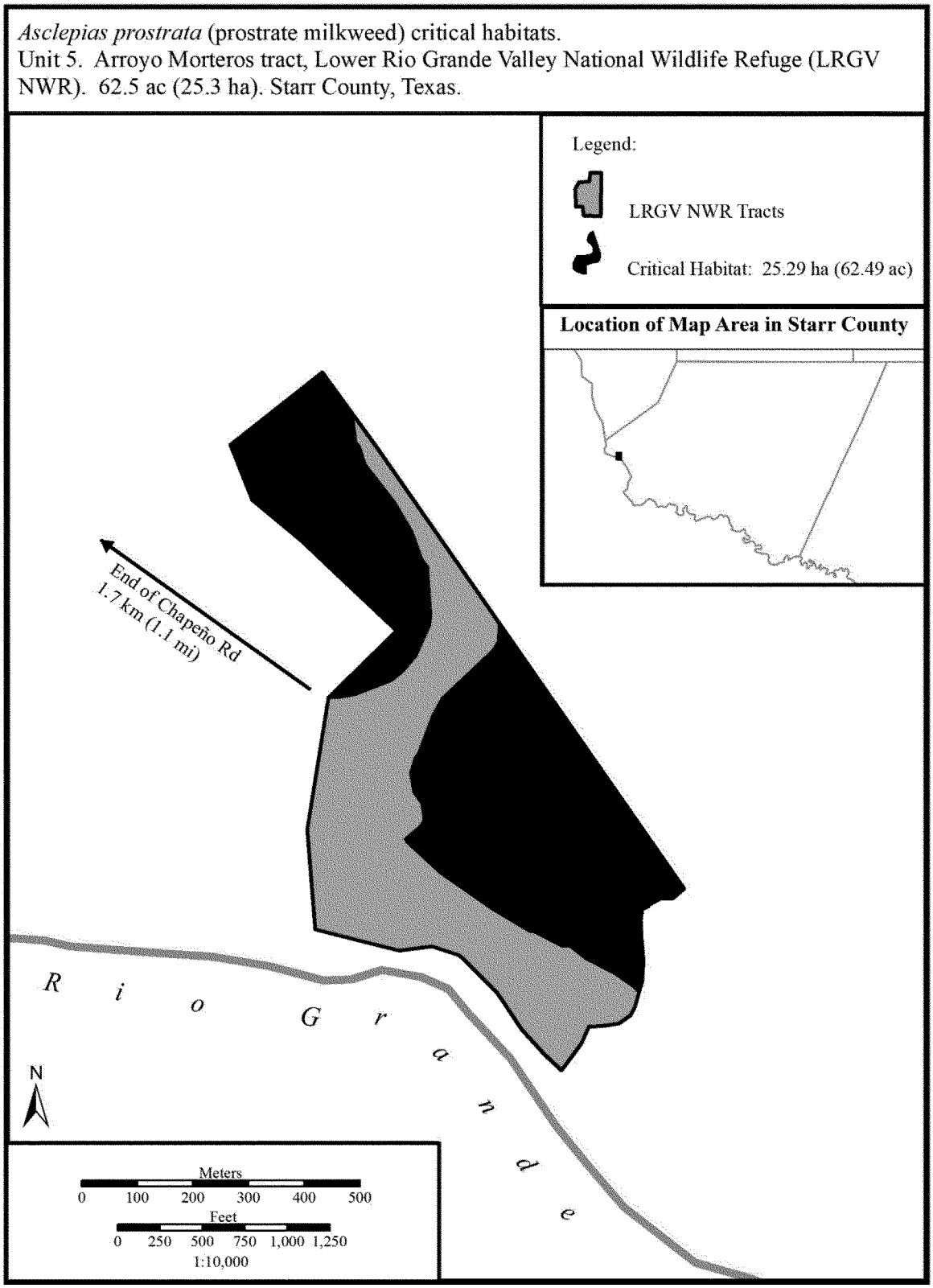

(11) Unit 6: Starr County, Texas.

(i) Unit 6 consists of 484.32 ac (196.0 ha) entirely on privately owned land and the adjacent right of way of San

Julian Road. This unit is in western Starr County.

(ii) Map of Unit 6 follows:

Figure 7 to Family Apocynaceae: *Asclepias prostrata* (Prostrate Milkweed) paragraph (11)(ii)

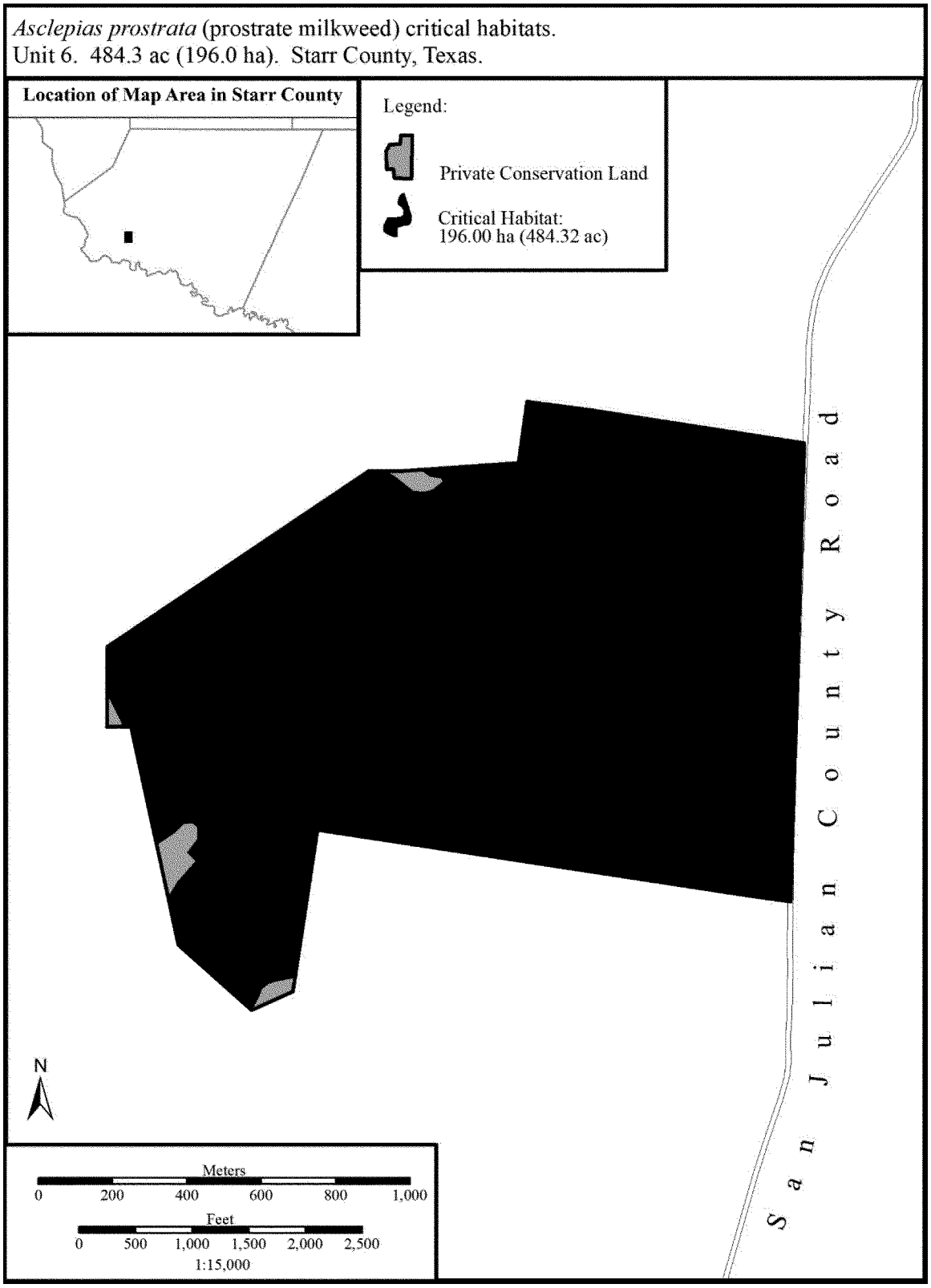

(12) Unit 7: Starr County, Texas.

(i) Unit 7 consists of 19.35 ac (7.83 ha) along both sides of a right of way and adjacent private land in western Starr County.

(ii) Map of Unit 7 follows:

Figure 8 to Family Apocynaceae: *Asclepias prostrata* (Prostrate Milkweed) paragraph (12)(ii)

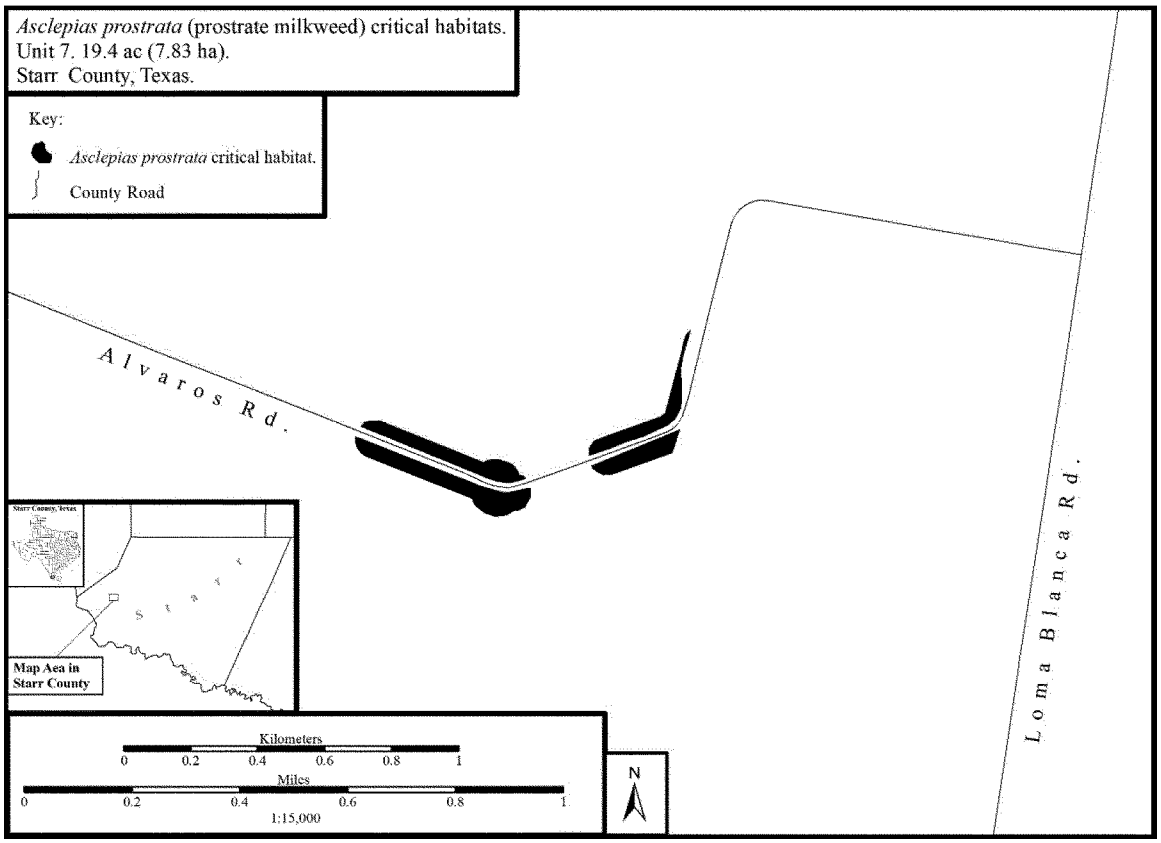

(13) Unit 8: Zapata County, Texas.

(i) Unit 8 consists of 1.04 ac (0.42 ha) on private land in central Zapata County.

(ii) Map of Unit 8 follows:

Figure 9 to Family Apocynaceae: *Asclepias prostrata* (Prostrate Milkweed) paragraph (13)(ii)

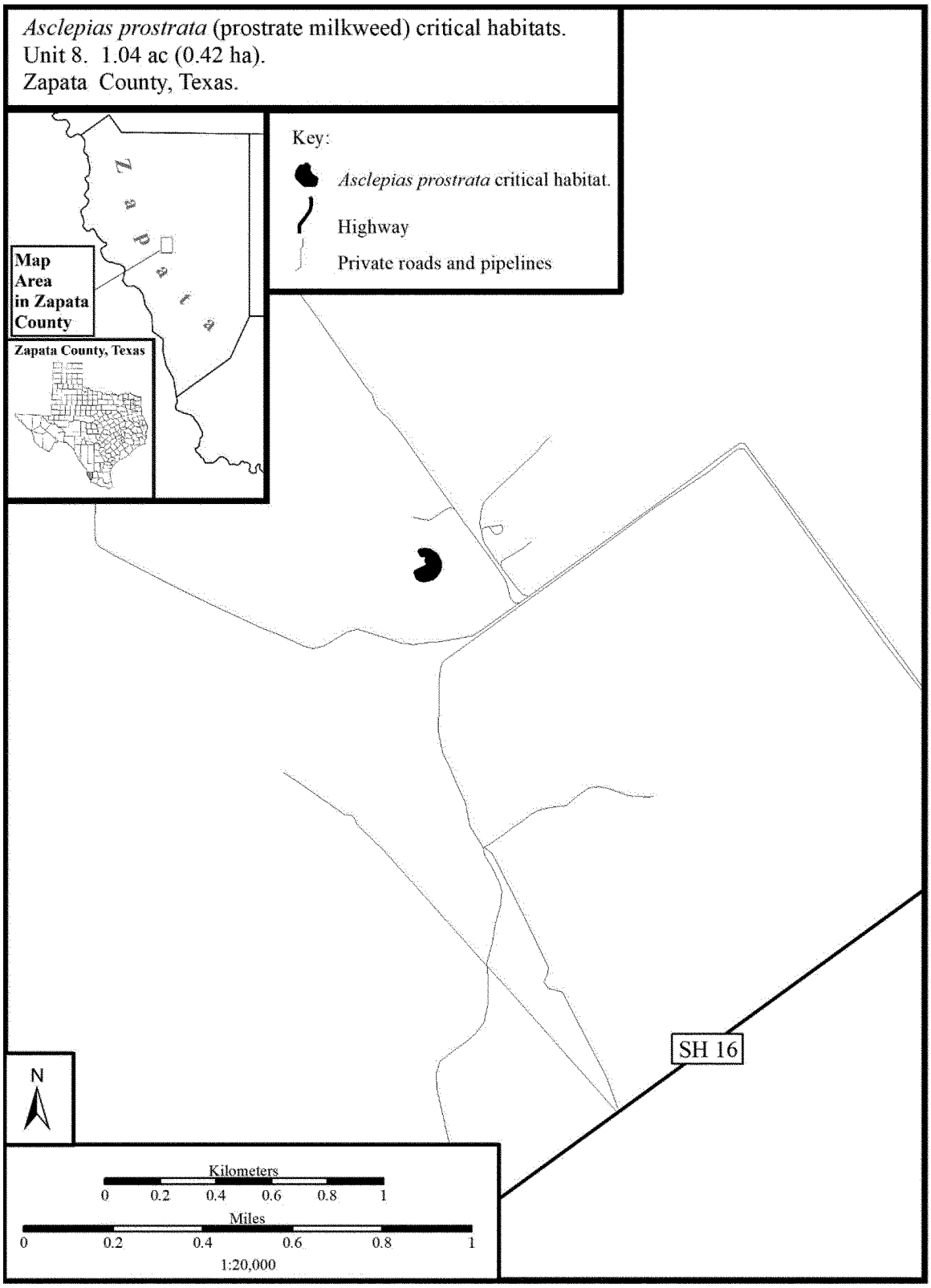

* * * * *

Martha Williams,

Principal Deputy Director, Exercising the Delegated Authority of the Director, U.S. Fish and Wildlife Service.

[FR Doc. 2022–02544 Filed 2–14–22; 8:45 am]

BILLING CODE 4333–15–C

DEPARTMENT OF COMMERCE

National Oceanic and Atmospheric Administration

50 CFR Part 648

[Docket No.: 220207–0042]

RIN 0648–BL13

Fisheries of the Northeastern United States; Framework Adjustment 34 to the Atlantic Sea Scallop Fishery Management Plan

AGENCY: National Marine Fisheries Service (NMFS), National Oceanic and Atmospheric Administration (NOAA), Commerce.

ACTION: Proposed rule; request for comments.

SUMMARY: NMFS proposes to approve and implement Framework Adjustment 34 to the Atlantic Sea Scallop Fishery Management Plan that establishes scallop specifications and other management measures for fishing years 2022 and 2023. Framework 34 would incorporate the new specifications-setting methodology and other changes developed by Amendment 21 to the Atlantic Sea Scallop Fishery Management Plan into the 2022 fishing year specifications, as well implement measures for fishing years 2022 and 2023to protect small scallops, promote scallop recruitment in the mid-Atlantic, and reduce bycatch of flatfish. This action would also address regulatory text that is unnecessary, outdated, or unclear. This action is necessary to prevent overfishing and improve both yield-per-recruit and the overall management of the Atlantic sea scallop resource.

DATES: Comments must be received by March 2, 2022.

ADDRESSES: The New England Fishery Management Council has prepared a draft environmental assessment (EA) for this action that describes the proposed measures in Framework Adjustment 34 and other considered alternatives and analyzes the impacts of the proposed measures and alternatives. The Council submitted a draft of Framework 34 to NMFS that includes the draft EA, a description of the Council's preferred alternatives, the Council's rationale for selecting each alternative, and an Initial Regulatory Flexibility Analysis (IRFA). Copies of the draft of Framework 34, the draft EA, the IRFA, and information on the economic impacts of this proposed rulemaking are available upon request from Thomas A. Nies, Executive Director, New England Fishery Management Council, 50 Water Street, Newburyport, MA 01950 and accessible via the internet in documents available at: *https://www.nefmc.org/library/framework-34-1.*

You may submit comments on this document, identified by NOAA–NMFS—NOAA–NMFS–2022–0009, by either of the following methods:

• *Electronic Submission:* Submit all electronic public comments via the Federal e-Rulemaking Portal. Go to *https://www.regulations.gov* and enter NOAA–NMFS–2022–0009 in the Search box. Click on the ''Comment'' icon, complete the required fields, and enter or attach your comments.

Instructions: Comments sent by any other method, to any other address or individual, or received after the end of the comment period, may not be considered by NMFS. All comments received are a part of the public record and will generally be posted for public viewing on *www.regulations.gov* without change. All personal identifying information (*e.g.,* name, address, etc.), confidential business information, or otherwise sensitive information submitted voluntarily by the sender will be publicly accessible. NMFS will accept anonymous comments (enter ''N/A'' in the required fields if you wish to remain anonymous).

FOR FURTHER INFORMATION CONTACT: Travis Ford, Fishery Policy Analyst, 978–281–9233.

SUPPLEMENTARY INFORMATION:

Background

The scallop fishery's management unit ranges from the shorelines of Maine through North Carolina to the outer boundary of the Exclusive Economic Zone. The Atlantic Sea Scallop Fishery Management Plan (FMP), established in 1982, includes a number of amendments and framework adjustments that have revised and refined the fishery's management. The New England Fishery Management Council sets scallop fishery catch limits and other management measures through specification or framework adjustments that occur annually or biennially. The Council adopted Framework 34 to the Atlantic Sea Scallop FMP on December 9, 2021. The Council submitted a draft of the framework, including a draft EA, for NMFS review and approval on January 3, 2022. This action proposes to approve and implement Framework 34, which establishes scallop specifications and other measures for fishing years 2022 and 2023, including changes to the catch, effort, and quota allocations and adjustments to the rotational area management program for fishing year 2022 and management measures to reduce bycatch of flatfish, and default specifications for fishing year 2023, as recommended by the Council.

On January 12, 2022, NMFS published Amendment 21 to the Atlantic Sea Scallop FMP (87 FR 1688). Amendment 21 makes several changes to the management of the Northern Gulf of Maine (NGOM) and limited access general category (LAGC) individual fishing quota (IFQ) components. Framework 34 would incorporate the new specifications-setting methodology and other changes developed in Amendment 21 into the 2022 fishing year 2022.

NMFS will implement these Framework 34 measures, if approved, as close as possible to the April 1 start of fishing year 2022. If NMFS implements these measures after the start of the fishing year, the default allocation measures currently established for fishing year 2022 will go into place on April 1, 2022. The Council reviewed the proposed regulations in this rule as drafted by NMFS and deemed them to be necessary and appropriate as specified in section 303(c) of the Magnuson-Stevens Fishery Conservation and Management Act (Magnuson-Stevens Act).

Specification of Scallop Overfishing Limit (OFL), Acceptable Biological Catch (ABC), Annual Catch Limits (ACL), Annual Catch Targets (ACT), Annual Projected Landings (APL) and Set-Asides for the 2022 Fishing Year, and Default Specifications for Fishing Year 2023

The Council set the proposed OFL based on a fishing mortality (F) of 0.61, equivalent to the F threshold updated through the Northeast Fisheries Science Center's most recent scallop benchmark stock assessment that was completed in September 2020. The proposed ABC and the equivalent total ACL for each fishing year are based on an F of 0.45, which is the F associated with a 25-percent probability of exceeding the OFL. The Council's Scientific and Statistical Committee (SSC) recommended scallop fishery ABCs of 56.7 million lb (25,724 mt) for 2022 and 51.1 million lb (23,200 mt) for the 2023 fishing year, after accounting for discards and incidental mortality. The SSC will reevaluate and

potentially adjust the ABC for 2023 when the Council develops the next framework adjustment.

Table 1 outlines the proposed scallop fishery catch limits. After deducting the incidental target total allowable catch (TAC), the research set-aside (RSA), and the observer set-aside, the remaining ACL available to the fishery is allocated according to the following fleet proportions established in Amendment 11 to the FMP (72 FR 20090; April 14, 2008): 94.5 percent is allocated to the limited access scallop fleet (*i.e.,* the larger ''trip boat'' fleet); 5 percent is allocated to the limited access general category (LAGC) individual fishing quota (IFQ) fleet (*i.e.,* the smaller ''day boat'' fleet); and the remaining 0.5 percent is allocated to limited access scallop vessels that also have LAGC IFQ permits. Amendment 15 to the FMP (76 FR 43746; July 21, 2011) specified that no buffers to account for management uncertainty are necessary in setting the LAGC ACLs, meaning that the LAGC ACL is equal to the LAGC ACT. For the limited access fleet, the management uncertainty buffer is based on the F associated with a 75-percent probability of remaining below the F associated with ABC/ACL, which, using the updated Fs applied to the ABC/ACL, now results in an F of 0.39. Amendment 21 to the FMP modified the ACL flowchart to account for the scallop biomass in the NGOM as part of the legal limits in the fishery by adding biomass from the area into calculations of the OFL and ABC. This action moved the accounting of the NGOM ACL from only within the OFL into the OFL and ABC/ACL for the entire fishery. In addition, Amendment 21 created the NGOM Set-Aside to support a directed LAGC fishery (including NGOM and LAGC IFQ permitted vessels) in the NGOM Management Area.

TABLE 1—SCALLOP CATCH LIMITS (mt) FOR FISHING YEARS 2022 AND 2023 FOR THE LIMITED ACCESS AND LAGC IFQ FLEETS

Catch limits	2022 (mt)	2023 (mt) [1]
ABC/ACL (discards removed)	25,724	23,200
Incidental Landings	23	23
RSA	578	578
Observer Set-Aside	257	232
ACL for fishery	24,865	22,367
Limited Access ACL	23,498	21,137
LAGC Total ACL	1,368	1,230
LAGC IFQ ACL (5 percent of ACL)	1,243	1,118
Limited Access with LAGC IFQ ACL (0.5 percent of ACL)	124	112
Limited Access ACT	20,365	18,318
NGOM Set-Aside	282	221
APL (after set-asides removed)	14,251	(1)
Limited Access APL (94.5 percent of APL)	13,467	(1)
Total IFQ Annual Allocation (5.5 percent of APL) [2]	784	588
LAGC IFQ Annual Allocation (5 percent of APL) [2]	713	534
Limited Access with LAGC IFQ Annual Allocation (0.5 percent of APL) [2]	71	53
ABC/ACL (discards removed)	25,724	23,200

[1] The catch limits for the 2023 fishing year are subject to change through a future specifications action or framework adjustment. This includes the setting of an APL for 2023 that will be based on the 2022 annual scallop surveys.

[2] As a precautionary measure, the 2023 IFQ and annual allocations are set at 75 percent of the 2022 IFQ Annual Allocations.

This action would deduct 1.275 million lb (578 mt) of scallops annually for 2022 and 2023 from the ABC for use as the Scallop RSA to fund scallop research. Participating vessels are compensated through the sale of scallops harvested under RSA projects. Of the 1.275 million lb (578 mt) allocation, NMFS has already allocated 153,834 lb (69,778 kg) to previously-funded multi-year projects as part of the 2021 RSA awards process. NMFS is reviewing proposals submitted for consideration of 2022 RSA awards and will be selecting projects for funding in the near future.

This action would also deduct 1 percent of the ABC for the industry-funded observer program to help defray the cost to scallop vessels that carry an observer. The observer set-aside is 257 mt for 2022 and 232 mt for 2023. The Council may adjust the 2023 observer set-aside when it develops specific, non-default measures for 2023.

Open Area Days-at-Sea (DAS) Allocations

This action would implement vessel-specific DAS allocations for each of the three limited access scallop DAS permit categories (*i.e.,* full-time, part-time, and occasional) for 2022 and 2023 (Table 2). Proposed 2022 DAS allocations are the same as those allocated to the limited access fleet in 2021. Framework 34 would set 2023 DAS allocations at 75 percent of fishing year 2022 DAS allocations as a precautionary measure. This is to avoid over-allocating DAS to the fleet in the event that the 2023 specifications action is delayed past the start of the 2023 fishing year. The proposed allocations in Table 2 exclude any DAS deductions that are required if the limited access scallop fleet exceeds its 2021 sub-ACL.

TABLE 2—SCALLOP OPEN AREA DAS ALLOCATIONS FOR 2022 AND 2023

Permit category	2022	2023 (default)
Full-Time	24.00	18.00
Part-Time	9.60	7.20
Occasional	2.00	1.50

If NMFS implements these Framework 34 measures after the April 1 start of fishing year 2022, default DAS allocations, which were established in Framework Adjustment 33 to the Scallop FMP (86 FR 27042; May 19, 2021), would go into place on April 1. Full-time vessels would receive 18 DAS, part-time vessels would receive 7.20 DAS, and occasional vessels would receive 1.50 DAS. The allocations would later be increased in accordance with Framework 34, if approved. NMFS will notify all limited access permit holders of both default and Framework 34 DAS allocations so that vessel owners know what mid-year adjustments would occur should Framework 34 be approved and implemented after April 1, 2022.

Changes to Fishing Year 2022 Sea Scallop Access Area Boundaries

For fishing year 2022 and the start of 2023, Framework 34 would keep Nantucket Lightship-South-Deep Access Area (NLS–S–D), Closed Area II (CAII), and Closed Area I Access Area (CAI) open as access areas. However, Framework 34 will not allocate any additional landings from CAI for the limited access fleet (see below).

Fishing Year 2022 Sea Scallop Closed Area Boundaries

Framework 34 would keep the Closed Area II–East (CAII–E) Closed Area closed to scallop fishing. This action would also close the New York Bight Scallop Rotational Area (Table 3) to scallop fishing to optimize growth of the several scallop year classes within the closure area and to support scallop fishing in years following the 2022 fishing year.

TABLE 3—NEW YORK BIGHT SCALLOP CLOSED AREA

Point	N latitude	W longitude
NYB1	40°00′	73°20′
NYB2	40°00′	72°30′
NYB3	39°20′	72°30′
NYB4	39°20′	73°20′
NYB1	40°00′	73°20′

This action would also close the Nantucket Lightship-West (NLSW) Scallop Rotational Area (Table 4). The Council is proposing to close this area to support the growth of this year class of small scallops in the absence of fishing pressure.

TABLE 4—NANTUCKET LIGHTSHIP-WEST SCALLOP CLOSED AREA

Point	N latitude	W longitude
NLSW1	40°43.44′	70°20′
NLSW2	40°43.44′	70°00′
NLSW3	40°43.44′	69°30′
NLSW4	40°20′	69°30′
NLSW5	40°20′	70°00′
NLSW6	40°26.63′	70°20′
NLSW1	40°43.44′	70°20′

Mid-Atlantic Scallop Rotational Area Reverting to Open Area

Framework 34 would revert the Mid-Atlantic Scallop Rotational Area (MAAA) to part of the open area. This area was previously managed as part of the area rotation program, but it no longer meets the criteria for either closure or controlled access. This area would become part of the open area and could be fished as part of the DAS program or on LAGC IFQ trips. Because fishing year 2021 carryover access area fishing will continue in the MAAA until May 30, 2022, this area would not revert to open area until May 31, 2022.

Stellwagen Bank Scallop Rotational Area Reverting to NGOM Area

Framework 34 would revert the Stellwagen Bank Scallop Rotational Area to part of the NGOM. This area was closed in 2020 to protect a substantial number of small scallops. Framework 34 would open this area to NGOM fishing because those small scallops have now been recruited into the fishery.

Full-Time Limited Access Allocations and Trip Possession Limits for Scallop Access Areas

Table 5 provides the proposed limited access full-time allocations for all of the access areas for the 2022 fishing year and the first 60 days of the 2023 fishing year. These allocations could be landed in as many trips as needed, so long as vessels do not exceed the possession limit (also in Table 5) on any one trip.

TABLE 5—PROPOSED SCALLOP ACCESS AREA FULL-TIME LIMITED ACCESS VESSEL POUNDAGE ALLOCATIONS AND TRIP POSSESSION LIMITS FOR 2022 AND 2023

Rotational access area	Scallop possession limit	2022 Scallop allocation	2023 Scallop allocation (default)
Closed Area II	15,000 lb (6,804 kg) per trip	30,000 lb (13,608 kg)	15,000 lb (6,804 kg).
Nantucket Lightship-South-Deep	15,000 lb (6,804 kg) per trip	15,000 lb (6,804 kg)	0 lb (0 kg).
Total		45,000 lb (20,412 kg)	15,000 lb (6,804 kg).

Changes to the Full-Time Limited Access Vessels' One-for-One Access Area Allocation Exchanges

Framework 34 would allow full-time limited access vessels to exchange access area allocation in 7,500-lb (3,402-kg) increments. The owner of a vessel issued a full-time limited access scallop permit would be able to exchange unharvested scallop pounds allocated into an access area for another full-time limited access vessel's unharvested scallop pounds allocated into another access area. For example, a full-time vessel may exchange 7,500 lb (3,402 kg) from one access area for 7,500 lb (3,402 kg) allocated to another full-time vessel for another access area. Further, a full-time vessel may exchange 15,000 lb (6,804 kg) from one access area for 15,000 lb (6,804 kg) allocated to another full-time vessel for another access area. One-for-one access area allocations for part-time limited access vessels must occur in the increments of a possession limit, *i.e.,* 9,000 lb (4,082 kg).

Part-Time Limited Access Allocations and Trip Possession Limits for Scallop Access Areas

Table 6 provides the proposed limited access part-time allocations for all of the access areas for the 2022 fishing year and the first 60 days of the 2023 fishing year. These allocations could be landed in as many trips as needed, so long as the vessels do not exceed the possession limit (also in Table 6) on any one trip.

TABLE 6—PROPOSED SCALLOP ACCESS AREA PART-TIME LIMITED ACCESS VESSEL POUNDAGE ALLOCATIONS AND TRIP POSSESSION LIMITS FOR 2022 AND 2023

Rotational access area	Scallop possession limit	2022 Scallop allocation	2023 Scallop allocation (default)
Closed Area II	9,000 lb (4,082 kg) per trip	9,000 lb (4,082 kg)	9,000 lb (4,082 kg).
Nantucket Lightship-South-Deep	9,000 lb (4,082 kg) per trip	9,000 lb (4,082 kg)	0 lb (0 kg).
Total		18,000 lb (8,165 kg)	9,000 lb (4,082 kg).

Closed Area I Only for RSA and LAGC IFQ Trips

Because of the limited amount of biomass in the CAI to support a full limited access trip, Framework 34 will not allocate any landings from CAI to the limited access fleet. CAI will only be available for the LAGC access area trips and RSA compensation fishing.

Payback Measures for 2022 Default Poundage Allocations in MAAA

During the development of Framework 33 in 2020, the projected biomass in the MAAA was expected to be able to support a default trip in fishing year 2022. However, the 2021 scallop surveys observed an unexpected decrease in biomass in the MAAA and 2022 projections of exploitable biomass suggest that this area cannot support additional access area fishing in 2022. Framework 34 would not allocate effort into the MAAA, but instead would revert the MAAA to part of the open area. If NMFS implements these Framework 34 measures after the April 1 start of fishing year 2022, default access area allocations, which were established in Framework 33 would go into place on April 1. Full-time vessels would receive 18,000 lb (8,165 kg) of MAAA allocation and part-time vessels would receive 7,200 lb (3,266 kg) of MAAA allocation. Because of this discrepancy, this action would set payback measures intended to disincentivize vessels from fishing in MAAA using 2022 default allocations.

If Framework 34 implementation is delayed, and a vessel fishes any of its fishing year 2022 default MAAA allocation established through Framework 33, that vessel would lose its CAII allocation established through Framework 34. This does not prohibit vessels from fishing the remainder of their fishing year 2021 MAAA allocation during the first 60 days of fishing year 2022. If Framework 34 is delayed, NMFS will notify all limited access permit holders of these payback measures and other fishing year 2022 default allocations.

LAGC Measures

1. ACL and IFQ Allocation for LAGC Vessels with IFQ Permits. For LAGC vessels with IFQ permits, this action would implement a 1,368-mt ACL for 2022 and a 1,230-mt default ACL for 2023 (see Table 1). These sub-ACLs have no associated regulatory or management requirements but provide a ceiling on overall landings by the LAGC IFQ fleets. If the fleet were to reach this ceiling, any overages would be deducted from the following year's sub-ACL. Framework 28 (82 FR 15155; March 27, 2017) changed the way the LAGC IFQ allocations are set from a direct percentage of the ACL to a percentage of the APL. The purpose of this change was to help ensure that the allocation of potential catch between the fleets is more consistent with the concept of spatial management by allocating catch to the LAGC IFQ fleet based on harvestable scallops instead of total biomass. Since Framework 28 was implemented in 2017, the LAGC IFQ allocation has been equal to 5.5 percent of the projected landings (5 percent for LAGC IFQ vessels and 0.5 percent for LAGC IFQ vessels that also have a limited access scallop permit). The annual allocation to the LAGC IFQ-only fleet for fishing years 2022 and 2023 based on APL would be 713 mt for 2022 and 534 mt for 2023 (see Table 1). Each vessel's IFQ would be calculated from these allocations based on APL.

If NMFS implements these Framework 34 measures after the April 1 start of the 2022 fishing year, the default 2022 IFQ allocations would go into place automatically on April 1, 2022. Because this action would implement IFQ allocations greater than the default allocations, NMFS will notify IFQ permit holders of both default 2022 and Framework 34 IFQ allocations so that vessel owners know what mid-year adjustments would occur should Framework 34 be approved.

2. ACL and IFQ Allocation for Limited Access Scallop Vessels with IFQ Permits. For limited access scallop vessels with IFQ permits, this action would implement a 124-mt ACL for 2022 and a default 112-mt ACL for 2023 (see Table 1). These sub-ACLs have no associated regulatory or management requirements, but provide a ceiling on overall landings by this fleet. If the fleet were to reach this ceiling, any overages would be deducted from the following year's sub-ACL. The annual allocation to limited access vessels with IFQ permits would be 71 mt for 2022 and 53 mt for 2023 (see Table 1). Each vessel's IFQ would be calculated from these allocations based on APL.

3. LAGC IFQ Trip Allocations for Scallop Access Areas. Framework 34 would allocate LAGC IFQ vessels a fleet-wide number of trips in CAI and NLS–S–D for fishing year 2022 and default trips in the CAI for fishing year

2023 (see Table 7). The scallop catch associated with the total number of trips for all areas combined (1,071 trips) for fishing year 2022 is equivalent to the 5.5 percent of total projected catch from access areas.

TABLE 7—FISHING YEARS 2022 AND 2023 LAGC IFQ TRIP ALLOCATIONS FOR SCALLOP ACCESS AREAS

Scallop access area	2022	2023 [1]
Closed Area I	714	357
Nantucket Lightship-South-Deep	357	0
Total	1,071	357

[1] The LAGC IFQ access area trip allocations for the 2023 fishing year are subject to change through a future specifications action or framework adjustment.

4. NGOM Scallop Fishery Landing Limits. This action proposes total allowable landings (TAL) in the NGOM of 661,387 lb (300,000 kg) for fishing year 2022 and 504,384 (228,785 kg) default NGOM TAL for fishing year 2023. This action would deduct 25,000 lb (11,340 kg) of scallops annually for 2022 and 2023 from the NGOM TAL to increase the overall Scallop RSA fund scallop research. In addition, this action would deduct 1 percent of the NGOM ABC from the NGOM TAL for fishing years 2022 and 2023 to support the industry-funded observer program to help defray the cost to scallop vessels that carry an observer (Table 8).

Amendment 21 developed landing limits for all permit categories in the NGOM and established an 800,000-lb (362,874-kg) NGOM Set-Aside trigger for the NGOM directed fishery, with a sharing agreement for access by all permit categories for allocation above the trigger. Allocation above the trigger (*i.e.,* the NGOM APL) will be split 5 percent for the NGOM fleet and 95 percent for limited access and LAGC IFQ fleets. Framework 34 would set an NGOM Set-Aside of 621,307 lb (281,820 kg) for fishing year 2022 and a default NGOM Set-Aside of 465,980 lb (211,365 kg) for fishing year 2023. Because the NGOM Set-Aside for fishing years 2022 and 2023 is below the 800,000-lb (362,874-kg) trigger, Framework 34 would not allocate any landings to the NGOM APL. Table 8 describes the breakdown of the NGOM TAL for the 2022 and 2023 (default) fishing years.

TABLE 8—NGOM SCALLOP FISHERY LANDING LIMITS FOR FISHING YEAR 2022 AND 2023

Landings limits	2022	2023 [1]
NGOM TAL	661,387 lb (300,000 kg)	504,384 (228,785 kg).
1 percent NGOM ABC for Observers	15,080 lb (6,840 kg)	13,404 (6,080 kg).
RSA Contribution	25,000 lb (11,340 kg)	25,000 lb (11,340 kg).
NGOM Set-Aside	621,307 lb (281,820 kg)	465,980 lb (211,365 kg).
NGOM APL	0 lb (0 kg)	

[1] The landings limits for the 2023 fishing year are subject to change through a future specifications action or framework adjustment.

5. Scallop Incidental Landings Target TAL. This action proposes a 50,000-lb (22,680-kg) scallop incidental landings target TAL for fishing years 2022 and 2023 to account for mortality from vessels that catch scallops while fishing for other species and ensure that F targets are not exceeded. The Council and NMFS may adjust this target TAC in a future action if vessels catch more scallops under the incidental target TAC than predicted.

RSA Harvest Restrictions

This action allows vessels participating in RSA projects to harvest RSA compensation from the NLS–S–D, CAI, CAII and the open area. However, to reduce bycatch of flatfish on Georges Bank, vessels may only harvest RSA compensation from Closed Area II from June 1, 2022, through August 14, 2022. All vessels are prohibited from harvesting RSA compensation pounds in all other access areas. Vessels are prohibited from fishing for RSA compensation in the NGOM unless the vessel is fishing an RSA compensation trip using NGOM RSA allocation that was awarded to an RSA project. Finally, Framework 34 prohibits the harvest of RSA from any access areas under default 2023 measures. At the start of 2023, RSA compensation may only be harvested from open areas. The Council will re-evaluate this default prohibition measure in the action that would set final 2023 specifications.

Regulatory Corrections Under Regional Administrator Authority

This proposed rule includes three revisions to address regulatory text that is unnecessary, outdated, or unclear. In addition, this proposed rule includes changes to regulatory text that would allow NMFS to implement measures developed in Amendment 21 to the Atlantic Sea Scallop FMP for fishing year 2022. Specifically, these proposed changes would implement regulations that expand the scallop industry-funded observer program to monitor directed scallop fishing in the NGOM by using a portion of the NGOM allocation to off-set monitoring costs. These revisions are consistent with section 305(d) of the Magnuson-Stevens Act, which provides authority to the Secretary of Commerce to promulgate regulations necessary to ensure that amendments to an FMP are carried out in accordance with the FMP and the Magnuson-Stevens Act. The first revisions, at § 648.11(k)(1), (k)(2)(i), (k)(2)(iii), (k)(5), (k)(5)(i), (k)(5)(i)(C), (k)(5)(ii), and (k)(6) would make changes to the require vessels fishing in the NGOM to participate in the observer program. Amendment 21 expanded the scallop industry-funded observer program to monitor directed scallop fishing in the NGOM by using a portion of the NGOM allocation to off-set monitoring costs. The second revision at §§ 648.53(a)(7) and 648.62(a)(3) would change the term ''scallop incidental catch'' to ''scallop incidental landings'' to more accurately describe the catch limit. The third revision at § 648.53(b) would clarify that DAS allocations are determined by applying estimates of open area landings per unit effort projected through the specifications or framework adjustment processes used to

set annual allocations and dividing that amount among vessels in the form of DAS calculated. Finally, in paragraphs § 648.59(a)(2) and (b)(3) the terms ''scallop rotational closed area'' and ''scallop rotational access area'' are added for consistency throughout the regulations.

Classification

NMFS is issuing this rule pursuant to sections 304(b)(1)(A) of the Magnuson-Stevens Act, which provides specific authority for implementing this action. Pursuant to section 305(d) of the Magnuson-Steven Act, this action is necessary to carry out the Atlantic Sea Scallop FMP, because to allow NMFS to implement measures developed in Amendment 21 to the Atlantic Sea Scallop FMP for fishing year 2022. The NMFS Assistant Administrator has determined that this proposed rule is consistent with the Atlantic Sea Scallop FMP and other applicable law, subject to further consideration after public comment.

This proposed rule has been determined to be not significant for purposes of Executive Order 12866.

An IRFA has been prepared for Framework 34, as required by section 603 of the Regulatory Flexibility Act (RFA). The IRFA describes the economic impact this proposed rule, if adopted, would have on small entities. The IRFA references and incorporates as applicable, the Framework 34 analyses and the preamble to this proposed rule. A summary of the IRFA follows:

Description of the Reasons Why Action by the Agency Is Being Considered and Statement of the Objectives of, and Legal Basis for, This Proposed Rule

This action proposes the management measures and specifications for the Atlantic sea scallop fishery for 2022, with 2023 default measures. A description of the action, why it is being considered, and the legal basis for this action are contained in the Council's Framework 34 document and the preamble of this proposed rule, and are not repeated here.

Description of Projected Reporting, Recordkeeping, and Other Compliance Requirements of the Proposed Rule

This action contains no new collection-of-information, reporting, or recordkeeping requirements. This proposed rule does not require specific action on behalf of regulated entities other than to ensure they stay within the specifications that would be set.

Federal Rules Which May Duplicate, Overlap or Conflict With This Proposed Rule

The proposed regulations do not create overlapping regulations with any state regulations or other Federal laws.

Description and Estimate of Number of Small Entities to Which the Rule Would Apply

The proposed regulations would affect all vessels with limited access and LAGC scallop permits, and there would be economic impacts to small entities. Those impacts are described in detail in the draft of Framework 34, specifically, in the IRFA (Section 7.2) and in the Economic and Social Impacts section (Section 6.6). Framework 34 (Section 5.6) provides extensive information on the number of vessels that would be affected by the proposed regulations, their home and principal state, dependency on the scallop fishery, and revenues and profits (see **ADDRESSES**). There were 316 vessels that held full-time limited access permits in 2020, including 250 dredge, 55 small-dredge, and 11 scallop trawl permits. In the same year, there were also 30 part-time limited access permits in the sea scallop fishery. No vessels were issued occasional scallop permits in 2020. In 2019, NMFS reported that there were a total of 300 IFQ-only permits, with 212 issued and 88 in Confirmation of Permit History. There were a total of 110 NGOM permits issued in 2019. About 102 of the IFQ vessels and 47 NGOM vessels actively fished for scallops in fishing year 2020. The remaining IFQ permit holders likely leased out scallop IFQ allocations with their permits in Confirmation of Permit History. Section 6.6 of Framework 34 provides extensive information on the number and size of vessels that would be affected by the proposed regulations, their home and principal state, dependency on the scallop fishery, and revenues and profits (see **ADDRESSES**).

For RFA purposes, NMFS defines a small business in a shellfish fishery as a firm that is independently owned and operated with receipts of less than $11 million annually (see 50 CFR 200.2). Individually permitted vessels may hold permits for several fisheries, harvesting species of fish that are regulated by several different fishery management plans, even beyond those impacted by the proposed action. Furthermore, multiple permitted vessels and/or permits may be owned by entities affiliated by stock ownership, common management, identity of interest, contractual relationships, or economic dependency. For the purposes of this analysis, ''ownership entities'' are defined as those entities with common ownership as listed on the permit application. Only permits with identical ownership are categorized as an ''ownership entity.'' For example, if five permits have the same seven persons listed as co-owners on their permit applications, those seven persons would form one ''ownership entity,'' that holds those five permits. If two of those seven owners also co-own additional vessels, that ownership arrangement would be considered a separate ''ownership entity'' for the purpose of this analysis.

On June 1 of each year, ownership entities are identified based on a list of all permits for the most recent complete calendar year. The current ownership dataset is based on the calendar year 2020 permits and contains average gross sales associated with those permits for calendar years 2018 through 2020. Matching the potentially impacted 2020 fishing year permits described above (limited access and LAGC IFQ) to calendar year 2020 ownership data results in 177 distinct ownership entities for the LA fleet and 89 distinct ownership entities for the LAGC IFQ fleet. Based on the Small Business Administration guidelines, 170 of the limited access distinct ownership entities and 89 LAGC IFQ entities are categorized as small. Seven limited access entities and no LAGC IFQ entities are categorized as large entities. There were 44 distinct small business entities with NGOM permits in 2020 permits.

Description of Significant Alternatives to the Proposed Action Which Accomplish the Stated Objectives of Applicable Statutes and Which Minimize Any Significant Economic Impact on Small Entities

The Council's preferred alternative (Alternative 3, Sub-option 2) would allocate each full-time limited access vessel 24 open area DAS and 3 access area trips (*i.e.,* 2 CAII trips at 15,000 lb (6,804 kg), 1 NLS–S–D trip at 15,000 lb (6,804 kg) amounting to 45,000 lb (20,412 kg) in fishing year 2022. This is estimated to result in about 31.42 million lb (15,613 mt) of landings after research and observer set-asides are accounted for. The limited access share of 94.5 percent is around 29.69 million lb (13,467 mt). The LAGC IFQ share (5.5 percent allocation for both IFQ-only and limited access vessels with IFQ permits) will be about 1.73 million lb (785 mt). Total landings, including set-asides to support research and observer coverage is projected to be about 34.04 million lb (15,440 mt) (Table 9).

The preferred alternative (Section 4.3.3.3 in Framework 34 (see **ADDRESSES**)) is expected to have negative impacts on the net revenues and profits of small entities regulated by

this action in fishing year 2022 (Framework 34) compared to the fishing year 2021 (Framework 33) scenario. The decline in revenue per entity between fishing year 2021 levels and fishing year 2022 is a result of declining allocations between these two fishing years. Projected landings for limited access fleet are expected to decline by about 6 million lb (2,722 mt) in the Framework 34 preferred alternative compared to Framework 33 preferred alternative. As described in the Economic Impacts Section 6.6.1, and summarized in Table 10 below, fleetwide net revenue for the limited access vessels (including revenue from the LAGC IFQ vessels) would be lower for the preferred alternative in Framework 34 (Section 4.3.3.3) by about $50 million (in 2021 dollars) compared to the preferred alternative in Framework 33. Net revenue for limited access vessels in fishing year 2022 under the Framework 34 preferred alternative would be $0.29 million lower per entity as compared to Framework 33 preferred alternative in fishing year 2021. Thus, the preferred alternative (Section 4.3.3.3) would have 12.77 percent lower net revenue compared to the Framework 33 preferred alternative (Table 10).

Under the preferred alternative (Section 4.3.3.3), allocations for the LAGC IFQ fishery, including the limited access vessels with IFQ permits, will be about 17.5 percent lower than the allocation that was implemented for fishing year 2021 under Framework 33. In terms of net revenue, this difference is expected to be of similar magnitude and negative for the preferred alternative relative to fishing year 2021 levels. Therefore, the Framework 34 preferred alternative will have negative economic impacts on the LAGC IFQ fishery compared to fishing year 2021 levels (Table 11).

The Council considered three NGOM TAL options for fishing year 2022 that ranged from 559,974 lb (254,003 kg) (Option 1) to 727,525 lb (330,003 kg) (Option 3). All three of the TAL options would result in higher revenues compared to No Action, which are default measures set in Framework 33 (74,000 lb (33,566 kg) TAC). The preferred alternative (Alternative 2, Option 2) would have a slightly higher TAL (661,387 lb (300,003 kg)) compared to the Alternative 2 Option 1, meaning that Option 2 would result in higher revenues than Option 1. When compared to No Action, the higher TAL of Option 2 would also result in higher revenues and economic benefits for entities in this fishery with an estimated increase in net revenues by about 762 percent compared to No Action (Table 12).

Under the sharing arrangement approved for the NGOM Management Area in Amendment 21, Framework 34 would not allocate pounds to the LAGC IFQ or limited access components as part of the APL for fishing year 2022 because the NGOM set-aside did not exceed 800,000 lb (362,878 kg). Therefore, Alternative 2 would not have direct impacts on limited access component, which would receive 29.69 million lb (13,467 mt) allocation in Alternative 2. More research is planned for this area in 2022, which will help to increase the understanding of biomass in the NGOM management area. This will lead better management of the NGOM resource with positive biological and economic impacts over the long-term on both LAGC and limited access vessels.

Economic impacts of Framework 34 preferred alternatives, including fishery specifications, access area trip allocations for the limited access and LAGC IFQ fisheries, NGOM measures, and other measures to reduce fishery impacts are expected to be negative for the scallop vessels and small business entities compared to the fishing year 2021 baseline implemented through Framework 33. We have determined that the preferred alternative is optimal because it would minimize risks associated with stock biomass uncertainties while protecting small scallops.

BILLING CODE 3510–22–P

Table 9—Short-term Economic Impacts for Fishing Year 2022 Compared with Fishing Year 2021 (Framework 34's Preferred Alternative Projections): Estimated Landings (Mil. Lb), Revenues, Producer Surplus, and Total Economic Benefits (in 2021 current dollars, Mil. Dollars)

Values/ RUN	Unit	4.3.1_NA	4.3.2.1	4.3.2.2	4.3.2_22 DAS	4.3.2_24 DAS	4.3.3.1	4.3.3.2	4.3.3_22 DAS	4.3.3_24 DAS (Preferred)	SQ_4.3.4	FW33_Preferred Alternative (in 2021 dollars)
Landings	mil lb	19.94	31.67	36.03	33.15	34.61	31.65	36.04	33.14	34.04	33.69	40.05
	mil kg	9.04	14.37	16.34	15.04	15.70	14.36	16.35	15.03	15.44	15.28	18.17
Revenue	mil $	$269.63	$409.61	$460.18	$427.02	$443.91	$409.33	$460.40	$426.91	$437.37	$434.67	$473.87
Producer Surplus	mil $	$202.61	$327.45	$370.65	$342.39	$356.83	$327.17	$370.86	$342.29	$351.25	$348.20	$373.44
Total Economic Benefits	mil $	$206.81	$339.42	$386.50	$355.63	$371.36	$339.13	$386.72	$355.52	$365.27	$361.94	$415.58
*Net Values or Difference from Fishing Year 2021 (Framework 33's Preferred Alternative projection) values:												
Landings	mil lb	(20.10)	(8.38)	(4.01)	(6.89)	(5.44)	(8.40)	(4.00)	(6.90)	(6.01)	(6.36)	-
	mil kg	(9.12)	(3.80)	(1.82)	(3.13)	(2.47)	(3.81)	(1.81)	(3.13)	(2.73)	(2.88)	-
Revenue	mil $	$(204.25)	$ (64.26)	$(13.69)	$(46.86)	$(29.96)	$(64.54)	$ (13.47)	$(46.96)	$(36.50)	$(39.20)	$-
Producer Surplus (PS)	mil $	$(170.83)	$ (45.99)	$(2.79)	$(31.04)	$(16.60)	$(46.26)	$(2.57)	$ (31.14)	$(22.19)	$(25.24)	$-
Total Economic Benefits (CS+PS)	mil $	- $(208.77)	$ (76.15)	$(29.08)	$(59.95)	$(44.21)	$(76.45)	$(28.86)	$ (60.06)	$(50.31)	$(53.63)	$-

* A negative sign indicates a lower value for a Framework 34 alternative compared to the Framework 33's preferred alternative.

Table 10--Net Scallop Revenue for Limited Access Vessels in Fishing Year 2022 and Percent Change from the Fishing Year 2021 (revenues in 2021 dollars)

	Unit	Framework 34 Alternatives (Economic Values in million dollars (in 2021$)										FW33's Preferred Alternative
		4.3.1	4.3.2.1	4.3.2.2	4.3.2 22 DAS	4.3.2 24 DAS	4.3.3.1	4.3.3.2	4.3.3 22 DAS	4.3.3.3 (FW34Pref)	4.3.4	(in 2021$)
Estimated scallop APL landings	mil lb	19.941	31.667	36.030	33.151	34.606	31.650	36.043	33.142	34.039	33.687	40.045
	mil kg	9.05	14.36	16.34	15.04	15.70	14.36	16.35	15.03	15.44	15.28	9.05
Estimated LA scallop landings (94.5% net of setasides)	mil lb	16.37	27.45	31.57	28.85	30.23	27.43	31.58	28.84	29.69	29.36	35.978
	mil kg	7.43	12.45	14.32	13.09	13.71	12.44	14.32	13.08	13.47	13.32	16.32
No. of Entities (Average in 2018-2020) both small andlarge	Counts	177	177	177	177	177	177	177	177	177	177	168
Estimated revenues for scallop APL	mil dollars	$269.63	$409.61	$460.18	$427.02	$443.91	$409.33	$460.40	$426.91	$437.37	$434.67	$473.87
Estimated LA revenues from scallop	mil dollars	$221.31	$355.04	$403.23	$371.63	$387.72	$354.78	$403.44	$371.52	$381.49	$378.80	$425.74
Estimated Net Revenue for scallop APL	mil dollars	$251.783	$382.655	$428.790	$398.581	$413.997	$382.379	$429.007	$398.479	$408.033	$405.121	$431.02
Estimated LA net revenue from scallop	mil dollars	$206.66	$331.68	$375.73	$346.88	$361.59	$331.42	$375.93	$346.78	$355.90	$353.05	$387.24
Net scallop revenue per Entity	mil dollars	$1.168	$1.874	$2.123	$1.960	$2.043	$1.872	$2.124	$1.959	$2.011	$1.995	$2.305
Percent change in net revenue compared to SQ (FW33)	Percent	-49.35%	-18.70%	-7.91%	-14.98%	-11.37%	-18.77%	-7.86%	-15.00%	-12.77%	-13.47%	0.00%

Note: Landings and net revenues net of set asides, such as research set aside scallop, etc.

Table 11--Impacts of the LAGC IFQ Allocation for 2022 Fishing Year

Sections		4.3.1	4.3.2.1	4.3.2 22 DAS	4.3.2 24 DAS	4.3.2.2	4.3.3.1	4.3.3 22 DAS	4.3.3.3 (FW34 Pref.)	4.3.3.2	4.3.4	FW33's Preferred Alternative
Descriptions												
Allocation for IFQ only vessels (5%)	lb	865,976	1,452,295	1,526,481	1,599,233	1,670,443	1,451,413	1,526,040	1,570,904	1,671,104	1,553,267	1,903,581
	kg	392,804	658,757	692,407	725,407	757,708	658,357	692,207	712,557	758,008	704,557	863,459
Allocation for LA vessels with IFQ permits (0.5%)	lb	86,598	145,230	152,648	159,923	167,044	145,141	152,604	157,090	167,110	155,327	190,358
	kg	39,281	65,876	69,241	72,541	75,771	65,836	69,221	71,256	75,801	70,456	86,346
Total Allocation for IFQ fishery (5.5%)	lb	952,573	1,597,525	1,679,129	1,759,157	1,837,487	1,596,555	1,678,644	1,727,994	1,838,214	1,708,594	2,093,940
	kg	432,084	724,633	761,648	797,948	833,479	724,193	761,428	783,813	833,808	775,013	949,805
Percent change in estimated landings (and expected revenue) per business entity from SQ (FW33 preferred alternative)		-54.5%	-23.7%	-19.8%	-16.0%	-12.2%	-23.8%	-19.8%	-17.5%	-12.2%	-18.4%	**0.0%**

Table 12-- Impacts of the Preferred Alternative 2 Option 2 and Other Alternatives for NGOM Scallop Fishery (2021 fishing year and monetary values in 2020 dollars)

	Alternative 1				Alternative 2			
	(No Action)		Option 1		Option 2(Preferred)		Option 3	
			(F=0.15)		(F=0.18)		(F=0.20)	
	lb	kg	lb	kg	lb	kg	lb	kg
2022 Total Allowable Landings	74,000	33,566	559,974	254,003	661,387	300,003	727,525	330,003
▪ 1% NGOM ABC for Observers	-	-	15,080	6,840	15,080	6,840	15,080	6,840
▪ 2022 RSA Contribution	2,000	907	25,000	11,340	25,000	11,340	25,000	11,340
▪ 2022 NGOM Set-Aside	72,000	32,659	519,895	235,823	621,307	281,823	687,446	311,823
Impacts of the NGOM Set-Aside:								
▪ Estimated LAGC revenue	$925,560		$6,683,250		$7,986,901		$8,837,118	
▪ DAS	360		2,599		3,107		3,437	
▪ Trip costs ($529 per DAS)	$190,404		$1,374,862		$1,643,046		$1,817,951	
▪ Net revenue	$735,156		$5,308,388		$6,343,855		$7,019,167	
▪ Net revenue net of No Action	-		$4,573,232		$5,608,699		$6,284,011	

BILLING CODE 3510–22–C

List of Subjects 50 CFR Part 648

Fisheries, Fishing, Recordkeeping and reporting requirements.

Dated: February 8, 2022.

Samuel D. Rauch, III,

Deputy Assistant Administrator for Regulatory Programs, National Marine Fisheries Service.

For the reasons set out in the preamble, 50 CFR part 648 is proposed to be amended as follows:

PART 648—FISHERIES OF THE NORTHEASTERN UNITED STATES

■ 1. The authority citation for part 648 continues to read as follows:

Authority: 16 U.S.C. 1801 *et seq.*

Subpart A—General Provisions

■ 2. In § 648.11,
■ a. Revise paragraphs (k)(1) and (k)(2)(i);
■ b. Add paragraph (k)(2)(iii);
■ c. Revise paragraphs (k)(5) introductory text and (k)(5)(i) introductory text;
■ d. Add paragraph (k)(5)(i)(C); and
■ e. Revise paragraphs (k)(5)(ii) and (k)(6).

The revisions and additions read as follows:

§ 648.11 Monitoring coverage.

* * * * *

(k) * * *

(1) *General.* Unless otherwise specified, owners, operators, and/or managers of vessels issued a Federal scallop permit under § 648.4(a)(2), and specified in paragraph (a) of this section, must comply with this section and are jointly and severally responsible for their vessel's compliance with this section. To facilitate the deployment of at-sea observers, all sea scallop vessels issued limited access, LAGC IFQ, and LAGC NGOM permits are required to comply with the additional notification requirements specified in paragraph (k)(2) of this section. When NMFS notifies the vessel owner, operator, and/or manager of any requirement to carry an observer on a specified trip in either an Access Area, Open Area, or NGOM as specified in paragraph (k)(3) of this section, the vessel may not fish for, take, retain, possess, or land any scallops without carrying an observer. Vessels may only embark on a scallop trip without an observer if the vessel owner, operator, and/or manager has been notified that the vessel has received a waiver of the observer requirement for that trip pursuant to paragraphs (k)(3) and (k)(4)(ii) of this section.

* * * * *

(2) * * *

(i) *Limited access vessels.* Limited access vessel owners, operators, or managers shall notify NMFS by telephone not more than 10 days prior to the beginning of any scallop trip of the time, port of departure, open area, NGOM, or specific Sea Scallop Access Area to be fished, and whether fishing as a scallop dredge, scallop trawl, or general category vessel.

* * * * *

(iii) *LAGC vessels fishing NGOM.* LAGC IFQ and NGOM vessel owners, operators, or managers must notify the NMFS by telephone by 0001 hr of the Thursday preceding the week (Sunday through Saturday) that they intend to start a NGOM scallop trip and must include the port of departure. NMFS may select up to two trips to be covered by an observer during the specified week (Sun-Sat). The owner, operator, or vessel manager must notify NMFS of any trip plan changes at least 48 hr prior to vessel departure.

* * * * *

(5) *Cost of coverage.* Owners of scallop vessels shall be responsible for paying the cost of the observer for all scallop trips on which an observer is carried onboard the vessel, regardless of whether the vessel lands or sells sea scallops on that trip, and regardless of the availability of set-aside for an increased possession limit or reduced DAS accrual rate. The owners of vessels that carry an observer may be compensated with a reduced DAS accrual rate for limited access open area scallop trips or additional scallop catch per day for limited access Sea Scallop Access Area trips or additional catch per open area or access area trip for LAGC IFQ trips or additional catch per NGOM trip in order to help defray the cost of the observer, under the program specified in §§ 648.53 and 648.60.

(i) Observer service providers shall establish the daily rate for observer coverage on a scallop vessel on an Access Area trip or open area DAS or IFQ trip or NGOM trip consistent with paragraphs (k)(5)(i)(A) and (B), respectively, of this section.

* * * * *

(C) *NGOM scallop trips.* For purposes of determining the daily rate in the NGOM for observed scallop trips on a limited access or LAGC vessel, regardless of the status of the industry-funded observer set-aside, a service provider may charge a vessel owner for no more than the time an observer boards a vessel until the vessel disembarks (dock to dock), where ''day'' is defined as a 24-hr period, and portions of the other days would be pro-rated at an hourly charge (taking the daily rate divided by 24). For example, if a vessel with an observer departs on July 1 at 10 p.m. and lands on July 3 at 1 a.m., the time spent at sea equals 27 hr, which would equate to 1 day and 3 hr.

(ii) NMFS shall determine any reduced DAS accrual rate and the amount of additional pounds of scallops on Sea Scallop Access Area, LAGC IFQ, and NGOM trips based on the economic conditions of the scallop fishery, as determined by best available information. Vessel owners and observer service providers shall be notified through the Small Entity Compliance Guide of any DAS accrual rate changes and any changes in additional pounds of scallops determined by the Regional Administrator to be necessary. NMFS shall notify vessel owners and observer providers of any adjustments.

* * * * *

(6) *Coverage and cost requirements.* When the available set-aside for observer coverage is exhausted, vessels shall still be required to carry an observer as specified in this section, and shall be responsible for paying for the cost of the observer, but shall not be authorized to harvest additional pounds or fish at a reduced DAS accrual rate.

* * * * *

Subpart D—Management Measures for the Atlantic Sea Scallop Fishery

■ 3. In § 648.53, revise paragraphs (a)(7), (a)(9), (b)(1), and (b)(3) to read as follows:

§ 648.53 Overfishing limit (OFL), acceptable biological catch (ABC), annual catch limits (ACL), annual catch targets (ACT), annual projected landings (APL), DAS allocations, and individual fishing quotas (IFQ).

(a) * * *

(7) *Scallop incidental landings target TAL.* The annual incidental landings target TAL is the catch available for harvest for vessels with incidental catch scallop permits. This incidental catch target will be removed from the ABC/ACL defined in paragraph (a)(3) of this section prior to establishing the limited access and LAGC IFQ sub-ACLs and sub-ACTs defined in paragraphs (a)(5) and (6) of this section.

* * * * *

(9) *Scallop fishery catch limits.* The following catch limits will be effective for the 2022 and 2023 fishing years:

TABLE 1 TO PARAGRAPH (a)(9)—SCALLOP FISHERY CATCH LIMITS

Catch limits	2022 (mt)	2023 (mt) [1]
OFL	38,271	34,941
ABC/ACL (discards removed)	25,724	23,200
Incidental Landings	23	23
RSA	578	578
Observer Set-Aside	257	232
NGOM Set-Aside	282	221
ACL for fishery	24,865	22,367
Limited Access ACL	23,498	21,137
LAGC Total ACL	1,368	1,230
LAGC IFQ ACL (5 percent of ACL)	1,243	1,118
Limited Access with LAGC IFQ ACL (0.5 percent of ACL)	124	112
Limited Access ACT	20,365	18,318
APL (after set-asides removed)	14,251	(1)
Limited Access APL (94.5 percent of APL)	13,467	(1)
Total IFQ Annual Allocation (5.5 percent of APL) [2]	784	588
LAGC IFQ Annual Allocation (5 percent of APL) [2]	713	534
Limited Access with LAGC IFQ Annual Allocation (0.5 percent of APL) [2]	71	53

[1] The catch limits for the 2023 fishing year are subject to change through a future specifications action or framework adjustment. This includes the setting of an APL for 2023 that will be based on the 2022 annual scallop surveys. The 2023 default allocations for the limited access component are defined for DAS in paragraph (b)(3) of this section and for access areas in § 648.59(b)(3)(i)(B).

[2] As specified in paragraph (a)(6)(iii)(B) of this section, the 2023 IFQ annual allocations are set at 75 percent of the 2022 IFQ Annual Allocations.

* * * * *

(b) * * *

(1) *DAS allocations.* DAS allocations shall be determined by distributing the portion of the limited access APL defined in paragraph (a)(3) of this section, as reduced by access area allocations defined in § 648.59, by applying estimates of open area landings per unit effort (LPUE) projected through the specifications or framework adjustment processes used to set annual allocations and dividing that amount among vessels in the form of DAS calculated.

* * * * *

(3) *DAS allocations.* The DAS allocations for limited access scallop vessels for fishing years 2022 and 2023 are as follows:

TABLE 2 TO PARAGRAPH (b)(3)—SCALLOP OPEN AREA DAS ALLOCATIONS

Permit category	2022	2023 [1]
Full-Time	24.00	18.00
Part-Time	9.60	7.20
Occasional	2.00	1.5

[1] The DAS allocations for the 2023 fishing year are subject to change through a future specifications action or framework adjustment. The 2023 DAS allocations are set at 75 percent of the 2022 allocation as a precautionary measure.

* * * * *

■ 4. In § 648.59, revise paragraphs (a)(2) and (3), (b)(3) introductory text, (b)(3)(i)(B), (b)(3)(ii), (c), (e), and (g)(3)(v) to read as follows:

§ 648.59 Sea Scallop Rotational Area Management Program and Access Area Program requirements.

(a) * * *

(2) *Transiting a Scallop Rotational Closed Area.* No vessel possessing scallops may enter or be in the area(s) specified in this section when those areas are closed, as specified through the specifications or framework adjustment processes defined in § 648.55, unless the vessel is transiting the area and the vessel's fishing gear is stowed and not available for immediate use as defined in § 648.2, or there is a compelling safety reason to be in such areas without such gear being stowed. A vessel may only transit the Closed Area II-East Scallop Rotational Area, as defined in § 648.60(d), if there is a compelling safety reason for transiting the area and the vessel's fishing gear is stowed and not available for immediate use as defined in § 648.2.

(3) *Transiting a Scallop Rotational Access Area.* Any sea scallop vessel that has not declared a trip into the Scallop Access Area Program may enter a Scallop Access Area, and possess scallops not caught in the Scallop Access Areas, for transiting purposes only, provided the vessel's fishing gear is stowed and not available for immediate use as defined in § 648.2. Any scallop vessel that has declared a trip into the Scallop Area Access Program may not enter or be in another Scallop Access Area on the same trip except such vessel may transit another Scallop Access Area provided its gear is stowed and not available for immediate use as defined in § 648.2, or there is a compelling safety reason to be in such areas without such gear being stowed. A vessel may only transit the Closed Area II Scallop Rotational Area, as defined in § 648.60(b)(1), if there is a compelling safety reason for transiting the area and the vessel's fishing gear is stowed and not available for immediate use as defined in § 648.2.

* * * * *

(b) * * *

(3) *Scallop Rotational Access Area Allocations*—

(i) * * *

(B) The following access area allocations and possession limits for limited access vessels shall be effective for the 2022 and 2023 fishing years:

(*1*) *Full-time vessels.*

(*i*) For a full-time limited access vessel, the possession limit and allocations are:

TABLE 1 TO PARAGRAPH (b)(3)(i)(B)(*1*)(*i*)

Rotational access area	Scallop possession limit	2022 Scallop allocation	2023 Scallop allocation (default)
Closed Area II	15,000 lb (6,804 kg) per trip	30,000 lb (13,608 kg)	15,000 lb (6,804 kg).
Nantucket Lightship-South-Deep	15,000 lb (6,804 kg) per trip	15,000 lb (6,804 kg)	0 lb (0 kg).
Total		45,000 lb (20,412 kg)	15,000 lb (6,804 kg).

(*ii*) [Reserved]

(*2*) *Part-time vessels.*

(*i*) For a part-time limited access vessel, the possession limit and allocations are as follows:

TABLE 2 TO PARAGRAPH (b)(3)(i)(B)(*2*)(*i*)

Rotational access area	Scallop possession limit	2022 Scallop allocation	2023 Scallop allocation (default)
Closed Area II	9,000 lb (4,082 kg) per trip	9,000 lb (4,082 kg)	9,000 lb (4,082 kg)
Nantucket Lightship-South-Deep	9,000 lb (4,082 kg) per trip	9,000 lb (4,082 kg)	0 lb (0 kg)
Total		18,000 lb (8,165 kg)	9,000 lb (4,082 kg)

(*ii*) [Reserved]

(*3*) *Occasional limited access vessels.*

(*i*) For the 2022 fishing year only, an occasional limited access vessel is allocated 3,750 lb (1,701 kg) of scallops with a trip possession limit at 3,750 lb of scallops per trip (1,701 kg per trip). Occasional limited access vessels may harvest the 3,750 lb (1,701 kg) allocation from either the Nantucket Lightship-South-Deep or Closed Area II Access Area.

(*ii*) For the 2023 fishing year, occasional limited access vessels are allocated 1,250 lb (567 kg) of scallops in Closed Area II Access Area with a trip possession limit of 1,250 lb of scallops per trip (567 kg per trip).

* * * * *

(ii) *Limited access vessels' one-for-one area access allocation exchanges—*

(A) *Full-time limited access vessels.*

(*1*) The owner of a vessel issued a full-time limited access scallop permit may exchange unharvested scallop pounds allocated into one access area for another vessel's unharvested scallop pounds allocated into another scallop access area. These exchanges may be made only in 7,500-lb (3,402-kg) increments. For example, a full-time vessel may exchange 7,500 lb (3,402 kg) from one access area for 7,500 lb (3,402 kg) allocated to another full-time vessel for another access area. Further, a full-time vessel may exchange 15,000 lb (6,804 kg) from one access area for 15,000 lb (6,804 kg) allocated to another full-time vessel for another access area. In addition, these exchanges may be made only between vessels with the same permit category: A full-time vessel may not exchange allocations with a part-time vessel, and vice versa. Vessel owners must request these exchanges by submitting a completed Access Area Allocation Exchange Form at least 15 days before the date on which the applicant desires the exchange to be effective. Exchange forms are available from the Regional Administrator upon request. Each vessel owner involved in an exchange is required to submit a completed Access Area Allocation Form. The Regional Administrator shall review the records for each vessel to confirm that each vessel has enough unharvested allocation remaining in a given access area to exchange. The exchange is not effective until the vessel owner(s) receive a confirmation in writing from the Regional Administrator that the allocation exchange has been made effective. A vessel owner may exchange equal allocations in 7,500-lb (3,402-kg) increments between two or more vessels of the same permit category under his/her ownership. A vessel owner holding a Confirmation of Permit History is not eligible to exchange allocations between another vessel and the vessel for which a Confirmation of Permit History has been issued.

(*2*) [Reserved]

(B) *Part-time limited access vessels.* The owner of a vessel issued a part-time limited access scallop permit may exchange unharvested scallop pounds allocated into one access area for another part-time vessel's unharvested scallop pounds allocated into another scallop access area. These exchanges may be made only for the amount of the current trip possession limit, as specified in paragraph (b)(3)(i)(B)(*2*) of this section. For example, if the access area trip possession limit for part-time limited access vessels is 9,000 lb (4,082 kg), a part-time limited access vessel may exchange no more or less than 9,000 lb (4,082 kg), from one access area for no more or less than 9,000 lb (4,082 kg) allocated to another vessel for another access area. In addition, these exchanges may be made only between vessels with the same permit category: A full-time limited access vessel may not exchange allocations with a part-time vessel, and vice versa. Vessel owners must request these exchanges by submitting a completed Access Area Allocation Exchange Form at least 15 days before the date on which the applicant desires the exchange to be effective. Exchange forms are available from the Regional Administrator upon request. Each vessel owner involved in an exchange is required to submit a completed Access Area Allocation Form. The Regional Administrator shall review the records for each vessel to confirm that each vessel has enough unharvested allocation remaining in a given access area to exchange. The exchange is not effective until the vessel owner(s) receive a confirmation in writing from the Regional Administrator that the allocation exchange has been made effective. A part-time limited access vessel owner may exchange equal allocations up to the current possession limit between two or more vessels under his/her ownership. A vessel owner holding a Confirmation of Permit History is not eligible to exchange allocations between another vessel and the vessel for which a Confirmation of Permit History has been issued.

* * * * *

(c) *Scallop Access Area scallop allocation carryover.* With the exception of vessels that held a Confirmation of Permit History as described in § 648.4(a)(2)(i)(J) for the entire fishing year preceding the carry-over year, a limited access scallop vessel may fish any unharvested Scallop Access Area allocation from a given fishing year within the first 60 days of the subsequent fishing year if the Scallop Access Area is open, unless otherwise specified in this section. However, the vessel may not exceed the Scallop Rotational Area trip possession limit. For example, if a full-time vessel has 7,000 lb (3,175 kg) remaining in the Closed Area II Access Area at the end of fishing year 2021, that vessel may harvest those 7,000 lb (3,175 kg) during the first 60 days that the Closed Area II Access Area is open in fishing year 2022 (April 1, 2022 through May 30, 2023).

* * * * *

(e) *Sea Scallop Research Set-Aside Harvest in Scallop Access Areas.* Unless otherwise specified, RSA may be harvested in any access area that is open in a given fishing year, as specified through a specifications action or framework adjustment and pursuant to § 648.56. The amount of scallops that can be harvested in each access area by vessels participating in approved RSA projects shall be determined through the RSA application review and approval process. The access areas open for RSA harvest for fishing years 2022 and 2023 are:

(1) 2022: Nantucket Lightship-South-Deep, Closed Area I, and Closed Area II Scallop Rotational Areas.

(i) For fishing year 2022, vessels may only harvest RSA compensation from Closed Area II from June 1, 2022 through August 14, 2022.

(ii) [Reserved]

(2) 2023: No access areas.

* * * * *

(g) * * *

(3) * * *

(v) *LAGC IFQ access area allocations.* The following LAGC IFQ access area trip allocations will be effective for the 2022 and 2023 fishing years:

TABLE 3 TO PARAGRAPH (g)(3)(v)

Scallop access area	2022	2023 [1]
Closed Area I	714	357
Nantucket Lightship-South-Deep	357	0
Total	1,071	357

[1] The LAGC IFQ access area trip allocations for the 2023 fishing year are subject to change through a future specifications action or framework adjustment.

* * * * *

■ 5. In § 648.60,
■ a. Revise paragraph (a);
■ b. Remove and reserve paragraph (b)(2)(ii); and
■ c. Add paragraph (i).

The revisions and additions read as follows:

§ 648.60 Sea Scallop Rotational Areas.

(a) *New York Bight Scallop Rotational Area.* The New York Bight Scallop Rotational Area is defined by straight lines connecting the following points in the order stated (copies of a chart depicting this area are available from the Regional Administrator upon request):

TABLE 1 TO PARAGRAPH (a)

Point	N latitude	W longitude
NYB1	40°00′	73°20′
NYB2	40°00′	72°30′
NYB3	39°20′	72°30′
NYB4	39°20′	73°20′
NYB1	40°00′	73°20′

* * * * *

(i) *Nantucket Lightship-West Scallop Rotational Area.* The Nantucket Lightship-West Scallop Rotational Area is defined by straight lines connecting the following points in the order stated (copies of a chart depicting this area are available from the Regional Administrator upon request):

TABLE 9 TO PARAGRAPH (i)

Point	N latitude	W longitude
NLSW1	40°43.44′	70°20′
NLSW2	40°43.44′	70°00′
NLSW3	40°43.44′	69°30′
NLSW4	40°20′	69°30′
NLSW5	40°20′	70°00′
NLSW6	40°26.63′	70°20′
NLSW1	40°43.44′	70°20′

* * * * *

■ 6. In § 648.62,
■ a. Revise paragraphs (a)(2) and (3);
■ b. Remove and reserve paragraph (a)(4);
■ c. Revise paragraphs (a)(5) and (b); and
■ d. Remove paragraph (e).

The revisions read as follows:

§ 648.62 Northern Gulf of Maine (NGOM) Management Program.

(a) * * *

(2) Scallop landings by vessels issued NGOM permits shall be deducted from the NGOM Set-Aside, as defined in § 648.53(a)(8)(iii), and specified in paragraph (b)(1) of this section, when vessels fished all or part of a trip in the Federal waters portion of the NGOM. If a vessel with a NGOM scallop permit fishes exclusively in state waters within the NGOM, scallop landings from those trips will not be deducted from the NGOM Set-Aside.

(3) Scallop landings by all vessels issued LAGC IFQ scallop permits and fishing in the NGOM scallop management area against the NGOM Set-Aside, as defined in § 648.53(a)(8)(iii), shall be deducted from NGOM Set-Aside specified in paragraph (b)(1) in this section. Scallop landings by LAGC IFQ scallop vessels fishing in the NGOM scallop management area shall be deducted from their respective scallop IFQs. Landings by vessels with incidental permits shall not be deducted from the NGOM total allowable catch specified in paragraph (b) of this section.

* * * * *

(5) Scallop landings by all vessels issued scallop permits and fishing in the NGOM under the scallop RSA program (as specified in § 648.56) shall be deducted from the overall RSA allocation.

(b) *NGOM Scallop Fishery Landings Limits.*

(1) The following landings limits will be effective for the NGOM for the 2022 and 2023 fishing years.

TABLE 1 TO PARAGRAPH (b)(1)

Landings limits	2022	2023 [1]
NGOM TAL	661,387 lb (300,000 kg)	504,384 (228,785 kg).
1 percent NGOM ABC for Observers	15,080 lb (6,840 kg)	13,404 (6,080 kg).
RSA Contribution	25,000 lb (11,340 kg)	25,000 lb (11,340 kg).
NGOM Set-Aside	621,307 lb (281,820 kg)	465,980 lb (211,365 kg).
NGOM APL	0 lb (0 kg).	

[1] The landings limits for the 2023 fishing year are subject to change through a future specifications action or framework adjustment.

(2) Unless a vessel has fished for scallops outside of the NGOM scallop management area and is transiting the NGOM scallop management area with all fishing gear stowed and not available for immediate use as defined in § 648.2, no vessel issued an LAGC scallop permit pursuant to § 648.4(a)(2) may possess, retain, or land scallops in the NGOM scallop management area once the Regional Administrator has provided notification in the **Federal Register** that the NGOM Set-Aside in accordance with paragraph (b)(1) of this section has been reached, unless the vessel is participating in the scallop RSA program as specified in § 648.56 and has been allocated NGOM RSA pounds. Once the NGOM Set-Aside is reached, a vessel issued a NGOM permit may no longer declare a state-only NGOM scallop trip and fish for scallops exclusively in state waters within the NGOM, unless participating in the state waters exemption program as specified in § 648.54. A vessel that has not been issued a Federal scallop permit that fishes exclusively in state waters is not subject to the closure of the NGOM scallop management area.

(3) If the NGOM Set-Aside is exceeded, the amount of NGOM scallop landings in excess of the NGOM Set-Aside specified in paragraph (b)(1) of this section shall be deducted from the NGOM Set-Aside for the subsequent fishing year, or, as soon as practicable, once scallop landings data for the NGOM management area is available.

* * * * *

[FR Doc. 2022–03047 Filed 2–14–22; 8:45 am]

BILLING CODE 3510–22–P

Notices

Federal Register

Vol. 87, No. 31

Tuesday, February 15, 2022

This section of the FEDERAL REGISTER contains documents other than rules or proposed rules that are applicable to the public. Notices of hearings and investigations, committee meetings, agency decisions and rulings, delegations of authority, filing of petitions and applications and agency statements of organization and functions are examples of documents appearing in this section.

DEPARTMENT OF AGRICULTURE

Agricultural Marketing Service

[Doc No. AMS–FGIS–21–0088]

Imaging Technology Solutions for the Inspection of Milled Rice

AGENCY: Agricultural Marketing Service, USDA.

ACTION: Notice; request for proposals.

SUMMARY: The United States Department of Agriculture's (USDA) Agricultural Marketing Service (AMS) is inviting manufacturers of automated imaging instrumentation to partner in cooperative research and development efforts to determine broken kernels, whole kernels, and milling yield, in percentage by mass, in short-, medium-, and long-grain milled rice. The goal is to develop a commercially available instrument that can be used in providing official inspection results at AMS field offices and official service provider locations. Manufacturers must be willing to enter into a cooperative research and development agreement that includes mutually agreed upon roles and responsibilities, providing a suitable instrument, and providing technical expertise to facilitate the development of algorithms and/or calibrations. AMS will provide the rice samples and inspection expertise necessary to facilitate method development efforts and assess whether the instrument is fit for the intended purpose.

DATES: Proposals are due by April 18, 2022.

ADDRESSES: Interested persons are invited to submit proposals to: Timothy D. Norden, Chief Scientist, Technology and Science Division, Federal Grain Inspection Service, AMS, USDA at *Timothy.D.Norden@usda.gov.*

FOR FURTHER INFORMATION CONTACT: Timothy D. Norden, Chief Scientist, Technology and Science Division, Federal Grain Inspection Service, AMS, USDA, 816–702–3803, *Timothy.D.Norden@usda.gov.*

SUPPLEMENTARY INFORMATION: Under the authority of the Agricultural Marketing Act of 1946 (7 U.S.C. 1621–1627), as amended, AMS establishes quality and grade standards, and provides inspection services for milled and rough rice. The determination of broken kernels in rice is important in the inspection and grading of rice. A broken kernel is defined as any kernel that is less than three-fourths the length of a whole kernel. For the inspection of rough rice, the whole kernel milling yield is the percentage by mass of whole kernels in the total rice after milling. The total rice includes whole and broken kernels. For the inspection of milled rice, the percentage by mass of broken kernels, expressed as percentage by mass of total rice, is an important grade-determining factor. A comprehensive information on the grading and inspection of rice, including the assessment of broken and whole kernels in milled rice, can be found in the Rice Inspection Handbook at *https://www.ams.usda.gov/sites/default/files/media/RiceHB.pdf.*

California produces the largest volume of medium grain rice for export markets. AMS official inspection locations, in California, rely on an imaging instrument for official inspection results. However, the manufacturer discontinued this imaging instrument over 10 years ago and no longer provides parts or technical support. As a result, official rice inspection, in California, could be impacted, if the instrument was to become damaged or unusable; it could lead to an increase in time and cost for inspecting rice in the State.

AMS is inviting manufacturers of automated imaging instrumentation to partner in development efforts to determine broken kernels, whole kernels, and milling yield, in percentage by mass, in short-, medium-, and long-grain milled rice. Manufacturers must be willing to enter into a cooperative research and development agreement that includes mutually agreed upon roles and responsibilities, providing a suitable instrument, and providing technical expertise to facilitate the development of algorithms and/or calibrations. AMS will provide the rice samples and inspection expertise necessary to help develop the solution and determine if it is fit for the intended purpose. To meet official inspection requirements and be deemed fit for purpose, instruments must have the capability of providing results for short-, medium-, and long-grain milled rice, in a total sample size of 40–50 grams, with a testing time of ten minutes or less. In addition, the instrument must ultimately deliver results that are as accurate as current official inspection results.

Manufacturers must provide a proposal that includes a description of the instrument and its current capabilities for analyzing broken kernels, whole kernels, and milling yield, in percentage by mass, in milled rice as defined in the Rice Inspection Handbook. The proposal should also address each selection factor as given in Table 1. AMS intends to select the top two instruments that demonstrate the greatest potential for successful development and implementation by summing the scores for the selection factors given in Table 1. Manufacturers who submit proposals will be notified directly when the selections are finalized. Selection and agreement to participate in the cooperative research and development process does not hold any obligation to future procurement.

TABLE 1—SELECTION FACTOR SCORES

Selection factor	Score		
	1 point	2 points	3 points
Current capability for broken and whole kernels in milled rice in percentage by mass.	One rice type (*i.e.,* long-grain only).	Two rice types (*i.e.,* short- and medium-grain).	Capability for short-, medium-, and long-grain milled rice.
Total testing time	8–10 minutes	5–7 minutes	1–4 minutes.
Test sample size	25 g or greater in a single analysis.		40 g or greater in a single analysis.
Sample presentation	Dependent on user technique *		Independent of user technique *.
Ability to update algorithm and/or calibration.	Requires manufacturer cooperation and expertise.	User updateable, but requires special training and/or programming.	User updateable with user-friendly tools available.
Instrumentation	Shared cost for duration of project	Loan of one instrument for duration of project.	Loan of two instruments for duration of project.
Manufacturer development resources.	Will provide tools and training for development efforts.	Will provide expertise and resources needed with 3- to 6-week turnaround on requests.	Will provide expertise and resources needed with 1- to 2-week turnaround on requests.

* The way the sample is presented to the instrument by the operator can influence the results.

Authority: 7 U.S.C. 1621–1627.

Melissa R. Bailey,

Associate Administrator, Agricultural Marketing Service.

[FR Doc. 2022–03180 Filed 2–14–22; 8:45 am]

BILLING CODE P

DEPARTMENT OF AGRICULTURE

Forest Service

Superior Resource Advisory Committee; Meeting

AGENCY: Forest Service, Agriculture, USDA.

ACTION: Notice of virtual meeting.

SUMMARY: The Superior Resource Advisory Committee (RAC) will hold a virtual meeting by phone and/or video conference. The committee is authorized under the Secure Rural Schools and Community Self-Determination Act (the Act) and operates in compliance with the Federal Advisory Committee Act. The purpose of the committee is to improve collaborative relationships and to provide advice and recommendations to the Forest Service concerning projects and funding consistent with Title II of the Act, as well as to make recommendations on recreation fee proposals for sites on the Superior National Forest within three Counties, consistent with the Federal Lands Recreation Enhancement Act. RAC information and virtual meeting information can be found at the following website: *https://www.fs.usda.gov/main/superior/workingtogether/advisorycommittees.*

DATES: The meeting will be held on March 2, 2022, 9:00 a.m.–11:00 a.m., Central Standard Time.

All RAC meetings are subject to cancellation. For status of the meeting prior to attendance, please contact the person listed under **FOR FURTHER INFORMATION CONTACT**.

ADDRESSES: The meeting will be held virtually via telephone and/or video conference. Members of the public may participate in the meeting by calling 1–202–650–0123 and use access code 234369808#.

Written comments may be submitted as described under **SUPPLEMENTARY INFORMATION**. All comments, including names and addresses when provided, are placed in the record and are available for public inspection and copying. The public may inspect comments received upon request.

FOR FURTHER INFORMATION CONTACT: Mike Crotteau, Designated Federal Officer (DFO), by phone at (218) 387–3205 or email at *michael.crotteau@usda.gov* or Cathy Quinn, RAC Coordinator, at (218) 387–3240 or email at *cathleen.quinn@usda.gov.*

Individuals who use telecommunication devices for the deaf/hard-of-hearing (TDD) may call the Federal Relay Service (FRS) at 1–800–877–8339, 24 hours a day, every day of the year, including holidays.

SUPPLEMENTARY INFORMATION: The purpose of the meeting is to:

1. Welcome and Introduction of Superior RAC Members;
2. Overview of SRS Funds and Role of Superior RAC;
3. Election of Superior RAC Chair and Vice Chair;
4. Schedule the next meeting; and
5. Question and Answer Session.

The meeting is open to the public. The agenda will include time for people to make oral statements of three minutes or less. Individuals wishing to make an oral statement should make a request in writing by February 16, 2022, to be scheduled on the agenda. Anyone who would like to bring related matters to the attention of the committee may file written statements with the committee staff before or after the meeting. Written comments and requests for time for oral comments must be sent to Cathy Quinn, 2020 West Highway 61, Grand Marais, MN 55604; or by email to *cathleen.quinn@usda.gov.*

Meeting Accommodations: Please make requests in advance for sign language interpreter services, assistive listening devices, or other reasonable accommodation. For access to proceedings, please contact the person listed in the section titled **FOR FURTHER INFORMATION CONTACT**. All reasonable accommodation requests are managed on a case-by-case basis.

Equal opportunity practices, in line with USDA policies, will be followed in all membership appointments to the RAC. To help ensure that recommendations of the RAC have taken into account the needs of the diverse groups served by the Department, membership shall include, to the extent practicable, individuals with demonstrated ability to represent minorities, women, and persons with disabilities.

The USDA prohibits discrimination in all of its programs and activities on the basis of race, color, national origin, religion, sex, gender identity (including gender expression), sexual orientation, disability, age, marital status, family/parental status, political beliefs, income derived from a public assistance

program, or reprisal or retaliation for prior civil rights activity in any program or activity conducted or funded by USDA (not all bases apply to all programs).

Dated: February 8, 2022.

Cikena Reid,

USDA Committee Management Officer.

[FR Doc. 2022–03140 Filed 2–14–22; 8:45 am]

BILLING CODE 3411–15–P

DEPARTMENT OF AGRICULTURE

Forest Service

Comprehensive River Management Plan for Nine Wild and Scenic Rivers on Mt. Hood National Forest, Forest Service, and Northwest Oregon District, Bureau of Land Management, Clackamas, Multnomah, Wasco and Hood River Counties, Oregon

AGENCY: Forest Service, Agriculture (USDA) and Bureau of Land Management, Department of Interior.

ACTION: Notice of availability.

SUMMARY: In accordance with Section 3(d)(1) of the Wild and Scenic Rivers Act, the Forest Service, U.S. Department of Agriculture, and Bureau of Land Management (BLM) announce the completion and availability of a comprehensive river management plan for nine wild and scenic rivers (CRMP for Nine Wild and Scenic Rivers), including Collawash River, Eagle Creek, East Fork Hood River, Fifteenmile Creek, Fish Creek, Middle Fork Hood River, South Fork Clackamas River, South Fork Roaring River, and Zigzag River. Approximately 0.6 miles of South Fork Clackamas River is managed by the BLM; the remaining portion of South Fork Clackamas River and all other eight wild and scenic rivers in this plan are managed by the Forest Service. On January 10, 2022, Mt. Hood National Forest Forest Supervisor, Meta Loftsgaarden, signed a decision notice to adopt the CRMP for Nine Wild and Scenic Rivers on National Forest System lands. Also on January 13, 2022, the BLM Northwest Oregon District's Cascades Field Office Manager John Huston signed a decision to adopt this CRMP on the BLM-administered lands. The CRMP for Nine Wild and Scenic Rivers addresses resource protection, development of lands and facilities, user capacities, and other management practices necessary or desirable to achieve the purposes of the Wild and Scenic Rivers Act. This CRMP was prepared after consultation with Tribal, State and local governments and the interested public. An environmental assessment (EA) was prepared as part of the CRMP development. This EA has been prepared in compliance with the National Environmental Policy Act and other relevant federal laws and regulations. The EA discloses the direct, indirect, and cumulative environmental effects that would result from adopting the CRMP.

ADDRESSES: The CRMP, EA, and decision notices are available for review at: *https://www.fs.usda.gov/project/?project=54674*; or, *https://eplanning.blm.gov/eplanning-ui/project/124163/570.* Also, the documents are available at the following offices: Mt Hood National Forest Supervisor's Office, 16400 Champion Way, Sandy, OR 97055; and, BLM Northwest Oregon District Office, 1717 Fabry Road SE, Salem, OR 97306.

FOR FURTHER INFORMATION CONTACT: Information may be obtained by contacting Michelle Lombardo, Forest Environmental Coordinator, Mt. Hood National Forest, 16400 Champion Way, Sandy, OR 97055, by phone at 971–303–2083, or at *michelle.lombardo@usda.gov.*

Individuals who use telecommunication devices for the deaf and hard of hearing (TDD) may call the Federal Relay Service (FRS) at 1–800–877–8339, 24 hours a day, every day of the year, including holidays.

Dated: February 9, 2022.

Sandra Watts,

Associate Deputy Chief, National Forest System.

[FR Doc. 2022–03187 Filed 2–14–22; 8:45 am]

BILLING CODE 3411–15–P

COMMISSION ON CIVIL RIGHTS

Sunshine Act Meetings

AGENCY: United States Commission on Civil Rights.

ACTION: Notice of Commission public business meeting.

DATES: Friday, February 18, 2022, 12:00 p.m. EST.

ADDRESSES: Meeting to take place by telephone and is open to the public by telephone: 888–204–4520, Conference ID #: 1292275.

FOR FURTHER INFORMATION CONTACT: Angelia Rorison: 202–376–7700; *publicaffairs@usccr.gov.*

SUPPLEMENTARY INFORMATION: In accordance with the Government in Sunshine Act (5 U.S.C. 552b), the Commission on Civil Rights is holding a meeting to discuss the Commission's business for the month of January. This business meeting is open to the public. Computer assisted real-time transcription (CART) will be provided. The web link to access CART (in English) on Friday, February 18, 2022, is *https://www.streamtext.net/player?event=USCCR.* Please note that CART is text-only translation that occurs in real time during the meeting and is not an exact transcript.

Meeting Agenda

I. Approval of Agenda
II. Business Meeting
  A. Presentations by State Advisory Committee Chairs on Released Reports and Memorandums
  B. Discussion and Vote on Advisory Committee Appointments
  C. Discussion and Vote to Appoint Raul (Danny) Vargas as interim Chair of the Virginia Advisory Committee
  D. Management and Operations
  • Staff Director's Report
III. Adjourn Meeting

Dated: February 10, 2022.

Angelia Rorison,

USCCR Media and Communications Director.

[FR Doc. 2022–03198 Filed 2–11–22; 11:15 am]

BILLING CODE P

DEPARTMENT OF COMMERCE

Agency Information Collection Activities; Withdrawal of Prior Notice and Proposed Submission of Information Collection for OMB Review; Comment Request; Medical Exception Request

AGENCY: Department of Commerce.

ACTION: Notice of withdrawal; notice of intent to request extension of OMB approval of information collection.

SUMMARY: The Department of Commerce (Department) published a notice in the **Federal Register** of its intent to request that the Office of Management and Budget (OMB) extend approval, without change, under the Paperwork Reduction Act (PRA), to a collection of information for its employees to request a medical exception to the COVID–19 vaccination requirement on January 25, 2022. That notice is withdrawn in light of the January 21, 2022 nationwide preliminary injunction enjoining implementation and enforcement of the federal employee vaccination requirement pursuant to the President's Executive Order 14043 of September 9, 2021, ''Requiring Coronavirus Disease 2019 Vaccination for Federal Employees.'' The Department seeks comment on its new notice of intent to request that OMB approve, without change, under the PRA, a collection of information for its employees to request

a medical exception to the COVID–19 vaccination requirement.

DATES: As of February 15, 2022, the notice published January 25, 2022 (87 FR 3759), is withdrawn. Comments on this notice of intent must be submitted on or before April 18, 2022.

ADDRESSES: Interested persons are invited to submit written comments to the Department of Commerce, PRA Clearance Officer at *PRAcomments@doc.gov.* All comments received are part of the public record. Comments will generally be posted without change. All Personally Identifiable Information (for example, name and address) voluntarily submitted by the commenter may be publicly accessible. Do not submit Confidential Business Information or otherwise sensitive or protected information.

FOR FURTHER INFORMATION CONTACT: Requests for additional information should be directed to the Attn: Zack Schwartz, Chief of Staff to the Acting CFO and Assistant Secretary for Administration, Commerce Headquarters, at (202) 577–1769; or via email: *ZSchwartz@doc.gov.*

SUPPLEMENTARY INFORMATION: This notice supersedes the notice published on January 25, 2022 (87 FR 3759), which the Department withdraws.

Under Executive Order 14043, every Federal agency must ''implement, to the extent consistent with applicable law, a program to require COVID–19 vaccination for all of its Federal employees, with exceptions only as required by law.'' In following this directive, the Department imposed a requirement that its employees must receive and submit proof of COVID–19 vaccination. As required by 29 U.S.C. 701 *et seq.* and 29 CFR part 1630, the Department allows an exception from the vaccination requirement for employees who demonstrate medical reasons or disabilities that would make the COVID–19 vaccine unsafe for them. To obtain this exception, employees can submit the *Request for Medical Exception to the COVID–19 Vaccination Requirement* form available from the Department's COVID–19 Information Hub. The Department uses the information on this form to verify employees' assertions that they are entitled to an exception to the COVID–19 vaccination requirement because of their medical or disability statuses.

OMB Control Number: 0690–0036.

Form Number(s): None.

Type of Review: Regular submission; Extension of an already approved collection.

Affected Public: Federal employees and medical providers.

Estimated Number of Respondents: 1,000.

Estimated Time per Response: 10 minutes.

Estimated Total Annual Burden Hours: 167.

Estimated Total Annual Cost to Public: $9,321.

Respondent's Obligation: Voluntary.

Legal Authority: Executive Order (E.O.) 14043.

We are soliciting public comments to permit the Department/Bureau to: (a) Evaluate whether the proposed information collection is necessary for the proper functions of the Department, including whether the information will have practical utility; (b) Evaluate the accuracy of our estimate of the time and cost burden for this proposed collection, including the validity of the methodology and assumptions used; (c) Evaluate ways to enhance the quality, utility, and clarity of the information to be collected; and (d) Minimize the reporting burden on those who are to respond, including the use of automated collection techniques or other forms of information technology.

Comments that you submit in response to this notice are a matter of public record. We will include or summarize each comment in our request to OMB to approve this information collection request. Before including your address, phone number, email address, or other personal identifying information in your comment, you should be aware that your entire comment—including your personal identifying information—may be made publicly available at any time. While you may ask us in your comment to withhold your personal identifying information from public review, we cannot guarantee that we will be able to do so.

A Notice Regarding Injunctions: The vaccination requirement issued pursuant to E.O. 14043, ''Requiring Coronavirus Disease 2019 Vaccination for Federal Employees'' is currently the subject of a nationwide injunction. While that injunction remains in place, the Department will not process requests for a medical exception from the COVID–19 vaccination requirement pursuant to E.O. 14043. The Department will also not request the submission of any medical information related to a request for an exception from the vaccination requirement pursuant to E.O. 14043 while the injunction remains in place. But the Department may nevertheless receive information regarding a medical exception. That is because, if the Department were to receive a request for an exception from the COVID–19 vaccination requirement pursuant to E.O. 14043 during the pendency of the injunction, the Department will accept the request, hold it in abeyance, and notify the employee who submitted the request that implementation and enforcement of the COVID–19 vaccination requirement pursuant to E.O. 14043 is currently enjoined and that an exception therefore is not necessary so long as the injunction is in place. In other words, during the pendency of the injunction, any information collection related to requests for medical exception from the COVID–19 vaccination requirement pursuant to E.O. 14043 is not undertaken to implement or enforce the COVID–19 vaccination requirement.

Sheleen Dumas,

Department PRA Clearance Officer, Office of the Chief Information Officer, Commerce Department.

[FR Doc. 2022–03184 Filed 2–14–22; 8:45 am]

BILLING CODE 3510–17–P

DEPARTMENT OF COMMERCE

Foreign-Trade Zones Board

[B–3–2022]

Foreign-Trade Zone (FTZ) 31—Granite City, Illinois; Notification of Proposed Production Activity; M.M.O. Companies, Inc.; (Disassembly of Firearms and Ammunition); Mascoutah, Edwardsville and Collinsville, Illinois

America's Central Port District, grantee of FTZ 31, submitted a notification of proposed production activity to the FTZ Board (the Board) on behalf of M.M.O. Companies, Inc., located in Mascoutah, Edwardsville and Collinsville, Illinois within Subzone 31E. The notification conforming to the requirements of the Board's regulations (15 CFR 400.22) was received on February 7, 2022.

Pursuant to 15 CFR 400.14(b), FTZ production activity would be limited to the specific foreign-status material(s)/component(s) and specific finished product(s) described in the submitted notification (summarized below) and subsequently authorized by the Board. The benefits that may stem from conducting production activity under FTZ procedures are explained in the background section of the Board's website—accessible via *www.trade.gov/ftz.*

The proposed finished products include: Trigger groups, gas piston assemblies, sight assemblies, magazines, rail attachments, dust cover assemblies, muzzle device assemblies, bolt carriers,

bolts, operating rods, cocking handles, carrying handles, foregrips/handguards, buttstocks, pistol grips and bayonet lugs from military rifles; empty ammunition cartridge casings; smokeless ammunition powder; ammunition primer; slides, hammers, trigger groups, sights, magazines, grips, bolt carriers and bolts from pistols; foregrips, buttstocks, pistol grips, trigger groups, gas piston assemblies, sight assemblies, magazines, rail attachments, dust cover assemblies, muzzle device assemblies, bolt carriers, bolts, carrying handles, operating rods and cocking handles from rifles; and, foregrips, buttstocks, pistol grips, trigger groups, gas piston assemblies, sight assemblies, magazines, rail attachments, dust cover assemblies, muzzle device assemblies, bolt carriers, bolts, carrying handles, operating rods and cocking handles from shotguns (duty rate ranges from duty-free to 4.2%).

The proposed foreign-status materials and components include: Military rifles; machine guns; semi-automatic pistols; semiautomatic rifles (centerfire); military shotguns; semiautomatic shotguns; pump action shotguns; and, 5.56mm, 7.62mm, .223, .50BMG, .308, 9mm, .45ACP, and .40 ammunition (duty rate ranges from duty-free to 13%). The request indicates that certain materials/components are subject to duties under Section 301 of the Trade Act of 1974 (Section 301), depending on the country of origin. The applicable Section 301 decisions require subject merchandise to be admitted to FTZs in privileged foreign status (19 CFR 146.41).

Public comment is invited from interested parties. Submissions shall be addressed to the Board's Executive Secretary and sent to: *ftz@trade.gov.* The closing period for their receipt is March 28, 2022.

A copy of the notification will be available for public inspection in the ''Online FTZ Information System'' section of the Board's website.

For further information, contact Elizabeth Whiteman at *Elizabeth.Whiteman@trade.gov.*

Dated: February 9, 2022.

Andrew McGilvray,

Executive Secretary.

[FR Doc. 2022–03175 Filed 2–14–22; 8:45 am]

BILLING CODE 3510–DS–P

DEPARTMENT OF COMMERCE

Foreign-Trade Zones Board

[S–18–2022]

Foreign-Trade Zone 123—Denver, Colorado; Application for Subzone; Kaiser Premier, LLC; Fort Morgan, Colorado

An application has been submitted to the Foreign-Trade Zones (FTZ) Board by the City and County of Denver, grantee of FTZ 123, requesting subzone status for the facilities of Kaiser Premier LLC, located in Fort Morgan, Colorado. The application was submitted pursuant to the provisions of the Foreign-Trade Zones Act, as amended (19 U.S.C. 81a–81u), and the regulations of the FTZ Board (15 CFR part 400). It was formally docketed on February 9, 2022.

The proposed subzone would consist of the following sites: *Site 1* (.77 acres) Factory 2—2550 East Bijou Avenue, Fort Morgan; *Site 2* (.11 acres) Warehouse—2431 East Beaver Avenue, Fort Morgan; and *Site 3* (.90 acres) Factory 3—404 Industry Dr., Fort Morgan. Production activity was authorized for Kaiser Premier LLC on August 17, 2021 under now-lapsed FTZ 293 (Doc. B–33–2021). The proposed subzone would be subject to the existing activation limit of FTZ 123.

In accordance with the FTZ Board's regulations, Qahira El-Amin of the FTZ Staff is designated examiner to review the application and make recommendations to the Executive Secretary.

Public comment is invited from interested parties. Submissions shall be addressed to the FTZ Board's Executive Secretary and sent to: *ftz@trade.gov.* The closing period for their receipt is March 28, 2022. Rebuttal comments in response to material submitted during the foregoing period may be submitted during the subsequent 15-day period to April 11, 2022.

A copy of the application will be available for public inspection in the ''Online FTZ Information Section'' section of the FTZ Board's website, which is accessible via *www.trade.gov/ftz.*

For further information, contact Qahira El-Amin at *Qahira.El-Amin@trade.gov.*

Dated: February 9, 2022.

Andrew McGilvray,

Executive Secretary.

[FR Doc. 2022–03174 Filed 2–14–22; 8:45 am]

BILLING CODE 3510–DS–P

DEPARTMENT OF DEFENSE

Office of the Secretary

Charter Amendment of Department of Defense Federal Advisory Committees—Uniform Formulary Beneficiary Advisory Panel

AGENCY: Department of Defense (DoD).

ACTION: Charter amendment of federal advisory committee.

SUMMARY: The DoD is publishing this notice to announce that it is amending the charter for the Uniform Formulary Beneficiary Advisory Panel (UFBAP).

FOR FURTHER INFORMATION CONTACT: Jim Freeman, DoD Advisory Committee Management Officer, 703–692–5952.

SUPPLEMENTARY INFORMATION: The UFBAP's charter is being amended in accordance with 10 U.S.C. 1074g(c) and the Federal Advisory Committee Act (FACA) (5 U.S.C., appendix) and 41 CFR 102–3.50(a). The charter and contact information for the UFBAP's Designated Federal Officer (DFO) are found at *https://www.facadatabase.gov/FACA/apex/FACAPublicAgencyNavigation.*

The UFBAP provides the Secretary of Defense, Deputy Secretary of Defense (''the DoD Appointing Authority''), through the Under Secretary of Defense for Personnel and Readiness (USD(P&R), who shall consider the UFBAP's advice and recommendations before implementing changes to the uniform formulary in accordance with DoD policy and procedures.

Pursuant to 10 U.S.C. 1074g(c)(2), the UFBAP is composed of no more than 15 members and shall include members that represent: (a) Nongovernmental organizations and associations that represent the views and interests of a large number of eligible covered beneficiaries; (b) Contractors responsible for the TRICARE retail pharmacy program; (c) Contractors responsible for the national mail-order pharmacy program; and (d) TRICARE network providers.

Authority to invite or appoint individuals to serve on the UFBAP rests solely with the DoD Appointing Authority for a term of service of one-to-four years, with annual renewals, in accordance with DoD policy and procedures. No member, unless approved by the DoD Appointing Authority, may serve more than two consecutive terms of service on the UFBAP or serve on more than two DoD Federal advisory committees at one time. The DoD Appointing authority shall appoint the UFBAP's leadership from among the membership previously approved to serve on the UFBAP in

accordance with DoD policy and procedures for term of service of one-to-two years, with annual renewal, not to exceed the member's approved appointment.

UFBAP members who are not full-time or permanent part-time Federal civilian officers or employees, or active duty members of the Uniformed Services, shall be appointed as experts or consultants pursuant to 5 U.S.C. 3109 to serve as special government employee members. UFBAP members who are full-time or permanent part-time Federal civilian officers or employees, or active duty members of the Uniformed Services, shall be appointed pursuant to 41 CFR 102–3.130(a) to serve as regular government employee members. All members of the UFBAP are appointed to exercise their own best judgment on behalf of the DoD, without representing any particular points of view, and to discuss and deliberate in a manner that is free from conflicts of interest. With the exception of reimbursement of official UFBAP-related travel and per diem, UFBAP members serve without compensation.

The public or interested organizations may submit written statements about the UFBAP's mission and functions. Written statements may be submitted at any time or in response to the stated agenda of planned meeting of the UFBAP. All written statements shall be submitted to the DFO for the UFBAP, and this individual will ensure that the written statements are provided to the membership for their consideration.

Dated: February 9, 2022.

Aaron T. Siegel,

Alternate OSD Federal Register, Liaison Officer, Department of Defense.

[FR Doc. 2022–03169 Filed 2–14–22; 8:45 am]

BILLING CODE 5001–06–P

DEPARTMENT OF EDUCATION

Applications for New Awards; Equity Assistance Centers

AGENCY: Office of Elementary and Secondary Education, Department of Education

ACTION: Notice.

SUMMARY: The Department of Education is issuing a notice inviting applications for fiscal year (FY) 2022 for the Equity Assistance Centers, Assistance Listing Number 84.004D. This notice relates to the approved information collection under OMB control number 1894–0006.

DATES:

Applications Available: February 15, 2022.

Deadline for Transmittal of Applications: May 16, 2022.

Deadline for Intergovernmental Review: July 15, 2022.

ADDRESSES: For the addresses for obtaining and submitting an application, please refer to our Common Instructions for Applicants to Department of Education Discretionary Grant Programs, published in the **Federal Register** on December 27, 2021 (86 FR 73264) and available at *www.federalregister.gov/d/2021-27979.* Please note that these Common Instructions supersede the version published on February 13, 2019, and, in part, describe the transition from the requirement to register in *SAM.gov* a Data Universal Numbering System (DUNS) number to the implementation of the Unique Entity Identifier (UEI). More information on the phase-out of DUNS numbers is available at *https://www2.ed.gov/about/offices/list/ofo/docs/unique-entity-identifier-transition-fact-sheet.pdf.*

FOR FURTHER INFORMATION CONTACT: Rebekka Meyer, U.S. Department of Education, 400 Maryland Avenue SW, Room 3E114, Washington, DC 20202. Telephone: (202) 453–5641. Email: *OESE.EACcompetition@ed.gov.*

If you use a telecommunications device for the deaf (TDD) or a text telephone (TTY), call the Federal Relay Service (FRS), toll free, at 1–800–877–8339.

SUPPLEMENTARY INFORMATION:

Full Text of Announcement

I. Funding Opportunity Description

Purpose of Program: The Equity Assistance Centers (EAC) program is authorized under title IV of the Civil Rights Act of 1964, 42 U.S.C. 2000c—2000c–2, 2000c–5, and the implementing regulations in 34 CFR part 270. This program awards grants through cooperative agreements ''to operate regional EACs that provide technical assistance (including training) at the request of school boards and other responsible governmental agencies in the preparation, adoption, and implementation of plans for the desegregation of public schools''—which in this context means plans for equity (including desegregation based on race, national origin, sex, and religion)—''and in the development of effective methods of coping with special educational problems occasioned by desegregation''(34 CFR 270.1).

Background: 42 U.S.C. 2000c SEC. 403 establishes the EAC program to provide technical assistance at the request of eligible entities with regard to ''special educational problems occasioned by desegregation.'' This term is defined in 34 CFR 270.7 to mean ''those issues that arise in classrooms, schools, and communities in the course of desegregation efforts based on race, national origin, sex, or religion.'' 34 CFR 270 additionally creates the term ''Desegregation assistance'', defined as ''the provision of technical assistance (including training) in the areas of race, sex, national origin, and religion desegregation of public elementary and secondary schools'' to describe the technical assistance services provided under this program. Desegregation assistance, per 34 CFR 270.4, ''may include, among other activities: (1) Dissemination of information regarding effective methods of coping with special educational problems occasioned by desegregation; (2) assistance and advice in coping with these problems; and (3) training designed to improve the ability of teachers, supervisors, counselors, parents, community members, community organizations, and other elementary or secondary school personnel to deal effectively with special educational problems occasioned by desegregation.'' A project must provide technical assistance in all four of the desegregation assistance areas: Race, sex, national origin, and religion desegregation (34 CFR 270.4). For example, EACs provide critical support to public schools, upon request by school boards and other responsible governmental entities in their geographic region, in developing effective strategies to ensure all students have a full opportunity to participate in educational programs. This may include assisting schools in fostering positive and safe learning environments that meet all students' needs, and that are free of bullying and violence related to race, color, national origin, sex, or religion. When requested, EACs may provide technical assistance only to students enrolled in public schools, parents of those students, public school personnel, community organizations, and other community members (34 CFR 270.3).

Previously known as the Desegregation Assistance Centers program, the EAC program is authorized under the Civil Rights Act of 1964 and has provided comprehensive training and advisory services on desegregation issues to States, school districts, and schools since the mid-1960s. Through the grants funded through this notice, the EAC program will continue to advance the Department's priorities to promote equity in student access to educational resources and opportunities.

In 2016, the Department reduced the number of EAC geographic regions from ten to four. The four EACs have experienced a steady increase in demand for services each year since this reorganization. In FY 2017, EACs provided targeted and intensive assistance to 20 State educational agencies (SEAs) and 48 local educational agencies (LEAs) in 33 States and territories. In FY 2020, EACs provided targeted and intensive assistance to 36 SEAs and 196 LEAs in 49 States and territories. This growth may be attributable to several factors, including increased awareness of the EAC services among potential clients (*e.g.,* SEAs, LEAs), recent increases in public interest in issues related to discrimination, and desegregation-related issues caused or exacerbated by the COVID–19 pandemic and conditions necessitated by it (*e.g.,* instances of online bullying related to race or ethnicity as a result of an increase in virtual instruction during the pandemic).

To ensure that new EAC grantees adequately respond to this increase in demand for services, applicants should have expert knowledge of Federal statutory requirements, regulations, and policies related to desegregating public schools by race, sex, national origin, and religion.

When addressing the selection criteria in the NIA, eligible applicants are encouraged to:

- Demonstrate their experience delivering technical assistance and training, informed by relevant data, that have resulted in documented improvements in creating more equitable learning environments for students;
- Demonstrate their proven ability to manage personnel, resources, and budgets to adequately respond to a high volume of technical assistance requests;
- Describe how they will consider the unique and diverse local and cultural needs of communities within their regions (*e.g.,* taking into account differences in the racial, ethnic, or religious diversity of the student populations in rural communities, communities with newcomer families, communities with high instances of languages other than English spoken in the home, Tribal communities) and consider appropriate staffing and partnerships that can assist the EAC in meeting diverse regional needs; and
- Describe their comprehensive plans to expeditiously establish and maintain networks of professional partnerships to further their desegregation work. This should include working relationships with Department offices and grant programs (*e.g.,* the Office for Civil Rights), other Federal agencies (*e.g.,* the Department of Justice), Department-funded technical assistance providers (*e.g.,* Comprehensive Centers, Regional Educational Laboratories), potential clients (*e.g.,* SEAs, LEAs in their regions), and professional organizations that can improve the effectiveness of their desegregation efforts, particularly in the applicant's EAC region.

The Department recognizes that developing effective methods of coping with special educational problems occasioned by desegregation based on race, religion, national origin, and sex in public schools may also intersect with many other areas of important educational equity work, including socioeconomic status and disability, among others. Therefore, to improve the effectiveness of collaborative efforts across technical assistance providers to create more equitable learning environments responsive to a comprehensive range of student needs, the Department encourages applicants to include in their proposed plans for networks of professional partnerships approaches for collaboration with agencies and organizations that reflect the broader intersectional nature of educational equity work.

The EAC program awards four grants, one for each geographical region. Each geographical region is comprised of, on average, 14 States and Territories. Given the large geographic size of each region, the skill and technological capacity to provide effective remote technical assistance and training are critical to the success of each EAC grantee. The Department encourages each applicant to propose a comprehensive plan to efficiently deliver effective remote technical assistance and training to clients that comply with applicable legal requirements for accessibility, including those required under Section 504 of the Rehabilitation Act of 1973 and the Americans with Disabilities Act.

We encourage applicants to describe a project design for service delivery informed by research or evaluation findings that demonstrates a rationale (as defined in this notice), explaining how the project is likely to improve or achieve relevant and expected outcomes (*e.g.,* via a logic model, as defined in this notice). In developing their rationales, applicants should consider research and evaluation findings regarding best practices for addressing desegregation based on sex, race, religion, and national origin. Applicants should also consider research and evaluation findings related to adult learning principles and strategies for their work when training school administrators, teachers, staff, and parents. Additionally, applicants should explain when addressing the project design selection criteria how they will examine the sources of inequities related to race, religion, national origin, and sex in public schools, and their intersection with many other areas of important educational equity work, including socioeconomic status and disability, among others. Finally, applicants should describe how the proposed training and advisory services it will provide, if requested, will utilize evidence-based (as the term is defined in 34 CFR 77.1) policies or strategies designed to increase racial, ethnic, cultural, socioeconomic, and linguistic diversity in educational settings (*e.g.,* creating a safe and welcoming learning environment for new students who are refugees and English learners).

Each EAC applicant should propose, whenever practicable, to employ evidence-based practices that mitigate impacts of segregation based on sex, race, religion, and national origin in public schools. Relatedly, EAC applicants are encouraged to describe how they plan to contribute to the evidence base on such practices, in accordance with the definition of ''evidence-based'' in 34 CFR 77.1. Applicants may also consider how the proposed project may develop evidence related to, or provide technical assistance on, evidence-based policies or strategies designed to increase inclusivity with regard to racial, ethnic, cultural, and linguistic diversity in educational settings appropriate to the needs of the intended recipients or beneficiaries of those services. Accordingly, applicants should include as part of their applications a rigorous evaluation plan that describes their methods to identify and evaluate evidence-based practices and resources developed in response to client requests and the criteria for determining the extent to which outputs and client outcomes (short-term, midterm, and long-term) were met as a result of the technical assistance provided.

Applicants should describe their current or recent working relationships with governmental agencies legally responsible for operating public schools in the applicants' EAC regions. Shortly after awards are made, each grantee will be required to develop a communications plan for working with the appropriate education agencies within its region (*e.g.,* SEAs, LEAs) to promote understanding about EAC services and to foster productive relationships with the agencies and the public at large. As part of this plan, each grantee must detail its strategies,

including the use of technology-based resources, for receiving ongoing and timely input on the needs of its clients and potential clients, and the usefulness of its services. Each grantee must also describe how it will continuously cultivate relationships with agencies and partners that are knowledgeable about the desegregation-related needs in its EAC region.

Priority: Under this competition we are particularly interested in applications that address the following priority.

Invitational Priority: For FY 2022 and any subsequent year in which the Department makes awards from the list of unfunded applications from this competition, this priority is an invitational priority. Under 34 CFR 75.105(c)(1) the Department does not give an application that meets this invitational priority a competitive or absolute preference over other applications.

This priority is:

Promoting Equity Through Diverse Partnerships.

Projects designed to promote educational equity and adequacy in resources and opportunity for underserved students in elementary school, middle school, and high school settings and which are implemented by or in partnership with one or more of the following entities:

(a) Historically Black colleges and universities, defined as colleges and universities that meet the criteria in 34 CFR 608.2.

(b) Tribal colleges and universities, as defined in section 316(b)(3) of the Higher Education Act of 1965, as amended (HEA).

(c) Minority-serving institutions, defined as institutions that are eligible to receive assistance under sections 316 through 320 of part A of title III, under part B of title III, or under title V of the HEA.

Definitions: For the convenience of applicants, the Department highlights the following definitions for this competition. We include definitions of the following terms from the EAC program regulations in 34 CFR 270.7: ''Desegregation assistance,'' ''Desegregation assistance areas,'' ''English learner,'' ''Equity Assistance Center,'' ''National origin desegregation,'' ''Public school,'' ''Race desegregation,'' ''Religion desegregation,'' ''Responsible governmental agency,'' ''School board,'' ''Sex desegregation,'' and ''Special educational problems occasioned by desegregation.'' We also include the definitions of ''demonstrates a rationale,'' ''logic model,'' ''project component,'' and ''relevant outcome'' from 34 CFR 77.1.

Demonstrates a rationale means a key project component included in the project's logic model is informed by research or evaluation findings that suggest the project component is likely to improve relevant outcomes.

Desegregation assistance means the provision of technical assistance (including training) in the areas of race, sex, national origin, and religion desegregation of public elementary and secondary schools.

Desegregation assistance areas means the areas of race, sex, national origin, and religion desegregation.

English learner has the same meaning as the same term defined in section 8101(20) of the Elementary and Secondary Education Act, as amended.

Equity Assistance Center means a regional desegregation technical assistance and training center funded under this part.

Logic model (also referred to as a theory of action) means a framework that identifies key project components of the proposed project (*i.e.,* the active ''ingredients'' that are hypothesized to be critical to achieving the relevant outcomes) and describes the theoretical and operational relationships among the key project components and relevant outcomes.

National origin desegregation means the assignment of students to public schools and within those schools without regard to their national origin, including providing students such as those who are English learners with a full opportunity for participation in all educational programs regardless of their national origin.

Project component means an activity, strategy, intervention, process, product, practice, or policy included in a project. Evidence may pertain to an individual project component or to a combination of project components (*e.g.,* training teachers on instructional practices for English learners and follow-on coaching for these teachers).

Public school means any elementary or secondary educational institution operated by a State, subdivision of a State, or governmental agency within a State, or operated wholly or predominantly from or through the use of governmental funds or property, or funds or property derived from governmental sources.

Race desegregation means the assignment of students to public schools and within those schools without regard to their race, including providing students with a full opportunity for participation in all educational programs regardless of their race. ''Race desegregation'' does not mean the assignment of students to public schools to correct conditions of racial separation that are not the result of State or local law or official action.

Relevant outcome means the student outcome(s) or other outcome(s) the key project component is designed to improve, consistent with the specific goals of the program.

Religion desegregation means the assignment of students to public schools and within those schools without regard to their religion, including providing students with a full opportunity for participation in all educational programs regardless of their religion.

Responsible governmental agency means any school board, State, municipality, LEA, or other governmental unit legally responsible for operating a public school or schools.

School board means any agency or agencies that administer a system of one or more public schools and any other agency that is responsible for the assignment of students to or within that system.

Sex desegregation means the assignment of students to public schools and within those schools without regard to their sex (including transgender status; gender identity; sex stereotypes, such as treating a person differently because he or she does not conform to sex-role expectations because he or she is attracted to or is in a relationship with a person of the same sex; and pregnancy and related conditions), including providing students with a full opportunity for participation in all educational programs regardless of their sex.

Special educational problems occasioned by desegregation means those issues that arise in classrooms, schools, and communities in the course of desegregation efforts based on race, national origin, sex, or religion. The phrase does not refer to the provision of special education and related services for students with disabilities as defined under the Individuals with Disabilities Education Act (20 U.S.C. 1400 *et seq.*).

Program Authority: 42 U.S.C. 2000c–2000c–2, 2000c–5.

Applicable Regulations: (a) The Education Department General Administrative Regulations (EDGAR) in 34 CFR parts 75, 77, 79, 81, 82, 84, 86, 97, 98, and 99. (b) The OMB Guidelines to Agencies on Governmentwide Debarment and Suspension (Nonprocurement) in 2 CFR part 180, as adopted and amended as regulations of the Department in 2 CFR part 3485. (c) The Uniform Administrative Requirements, Cost Principles, and Audit Requirements for Federal Awards

in 2 CFR part 200, as adopted and amended as regulations of the Department in 2 CFR part 3474. (d) The regulations for this program in 34 CFR part 270.

Note: The regulations in 34 CFR part 86 apply to institutions of higher education only.

II. Award Information

Type of Award: Cooperative agreement.

Estimated Available Funds: The Administration has requested $6,575,000 for this program for FY 2022, of which we intend to use an estimated $6,500,000 for awards under this competition. The actual level of funding, if any, depends on final congressional action. However, the Department is inviting applications to allow enough time to complete the grant process before the end of the current fiscal year, if Congress appropriates funds for this program.

Estimated Range of Awards: $1,400,000–$1,700,000.

Estimated Average Size of Awards: $1,625,000.

Maximum Award: The Department will not make an award exceeding $1,700,000 for a single budget period of 12 months. Under 34 CFR 75.104(b), the Secretary may reject without consideration or evaluation any application that proposes a project funding level that exceeds the stated maximum award amount.

Estimated Number of Awards: 4.

Note: The Department is not bound by any estimates in this notice.

Project Period: Up to 60 months.

III. Eligibility Information

1. *Eligible Applicants:* To be considered for an award under this competition, an applicant must be:

(a) A public agency (other than a State educational agency or a school board);

(b) A private, non-profit organization; or

(c) A consortium comprised entirely of agencies or organizations described in clauses (a) or (b).

Note: If applying as a consortium, applicants should refer to 34 CFR 75.127–75.129 for information about group applications.

If you are a nonprofit organization, under 34 CFR 75.51, you may demonstrate your nonprofit status by providing: (1) Proof that the Internal Revenue Service currently recognizes the applicant as an organization to which contributions are tax deductible under section 501(c)(3) of the Internal Revenue Code; (2) a statement from a State taxing body or the State attorney general certifying that the organization is a nonprofit organization operating within the State and that no part of its net earnings may lawfully benefit any private shareholder or individual; (3) a certified copy of the applicant's certificate of incorporation or similar document if it clearly establishes the nonprofit status of the applicant; or (4) any item described above if that item applies to a State or national parent organization, together with a statement by the State or parent organization that the applicant is a local nonprofit affiliate.

2. a. *Cost Sharing or Matching:* This program does not require cost sharing or matching.

b. *Indirect Cost Rate Information:* This program uses an unrestricted indirect cost rate. For more information regarding indirect costs, or to obtain a negotiated indirect cost rate, please see *www2.ed.gov/about/offices/list/ocfo/intro.html.*

c. *Administrative Cost Limitation:* This program does not include any program-specific limitation on administrative expenses. All administrative expenses must be reasonable and necessary and conform to Cost Principles described in 2 CFR part 200 subpart E of the Uniform Guidance.

3. *Subgrantees:* A grantee under this competition may not award subgrants to entities to directly carry out project activities described in its application.

4. *Geographical Regions:* One EAC will be funded under this grant program in each of four geographical regions, in accordance with 34 CFR 270.5 and 270.20. One award will be made in each region to the highest-ranking proposal from that region. If an applicant wishes to apply to serve more than one region, the applicant must submit a separate application for each region it wishes to serve.

Note: The Department intends to create four separate funding slates, one for each geographic region. The Department anticipates funding a single EAC in each geographic region.

The geographic regions served by the EACs are:

Region I: Connecticut, Delaware, Kentucky, Maine, Maryland, Massachusetts, New Hampshire, New Jersey, New York, Pennsylvania, Puerto Rico, Rhode Island, Vermont, Virgin Islands, West Virginia.

Region II: Alabama, Arkansas, District of Columbia, Florida, Georgia, Louisiana, Mississippi, North Carolina, South Carolina, Tennessee, Texas, Virginia.

Region III: Illinois, Indiana, Iowa, Kansas, Michigan, Minnesota, Missouri, Nebraska, North Dakota, Ohio, Oklahoma, South Dakota, Wisconsin.

Region IV: Alaska, American Samoa, Arizona, California, Colorado, Commonwealth of the Northern Mariana Islands, Guam, Hawaii, Idaho, Montana, Nevada, New Mexico, Oregon, Utah, Washington, Wyoming.

IV. Application and Submission Information

1. *Application Submission Instructions:* Applicants are required to follow the Common Instructions for Applicants to Department of Education Discretionary Grant Programs, published in the **Federal Register** on December 27, 2021 (86 FR 73264) and available at *www.federalregister.gov/d/2021-27979,* which contain requirements and information on how to submit an application. Please note that these Common Instructions supersede the version published on February 13, 2019, and, in part, describe the transition from the requirement to register in *SAM.gov* a DUNS number to the implementation of the UEI. More information on the phase-out of DUNS numbers is available at *https://www2.ed.gov/about/offices/list/ofo/docs/unique-entity-identifier-transition-fact-sheet.pdf.*

2. *Submission of Proprietary Information:* Given the types of projects that may be proposed in applications for the EAC program, your application may include business information that you consider proprietary. In 34 CFR 5.11 we define ''business information'' and describe the process we use in determining whether any of that information is proprietary and, thus, protected from disclosure under Exemption 4 of the Freedom of Information Act (5 U.S.C. 552, as amended).

Because the Department plans to make successful applications available to the public, you may wish to request confidentiality of business information.

Consistent with Executive Order 12600, please designate in your application any information that you believe is exempt from disclosure under Exemption 4. In the appropriate Appendix section of your application, under ''Other Attachments Form,'' please list the page number or numbers on which we can find this information. For additional information please see 34 CFR 5.11(c).

3. *Intergovernmental Review:* This program is subject to Executive Order 12372 and the regulations in 34 CFR part 79.

4. *Funding Restrictions:* The Department references regulations outlining funding restrictions in the

Applicable Regulations section of this notice.

5. *Recommended Page Limit:* The application narrative is where you, the applicant, address the selection criteria that reviewers use to evaluate your application. The Department recommends that you (1) limit the application narrative to no more than 50 pages and (2) use the following standards:

- A ''page'' is 8.5″ x 11″, on one side only, with 1″ margins at the top, bottom, and both sides.
- Double space (no more than three lines per vertical inch) all text in the application narrative, including titles, headings, footnotes, quotations, references, and captions, as well as all text in charts, tables, figures, and graphs.
- Use a font that is either 12 point or larger or no smaller than 10 pitch (characters per inch).
- Use one of the following fonts: Times New Roman, Courier, Courier New, or Arial.

The recommended page limit does not apply to the cover sheet; the budget section, including the narrative budget justification; the assurances and certifications; or the one-page abstract, the resumes, the bibliography, or the letters of support. However, the recommended page limit does apply to all of the application narrative.

V. Application Review Information

1. *Selection Criteria:* The selection criteria for this competition are from 34 CFR 75.210. The maximum score for addressing all of these criteria is 100 points. The maximum score for addressing each criterion is indicated in parentheses.

(a) *Quality of the project design.* (Up to 65 points)

(1) The Secretary considers the quality of the design of the proposed project.

(2) In determining the quality of the design of the proposed project, the Secretary considers the following factors:

(i) The extent to which the services to be provided by the proposed project are appropriate to the needs of the intended recipients or beneficiaries of those services. (Up to 15 points)

(ii) The extent to which the services to be provided by the proposed project involve the collaboration of appropriate partners for maximizing the effectiveness of project services. (Up to 10 points)

(iii) The extent to which the proposed project demonstrates a rationale (as defined in this notice). (Up to 10 points)

(iv) The extent to which the design of the proposed project includes a thorough, high-quality review of the relevant literature, a high-quality plan for project implementation, and the use of appropriate methodological tools to ensure successful achievement of project objectives. (Up to 10 points)

(v) The extent to which the methods of evaluation will provide performance feedback and permit periodic assessment of progress toward achieving intended outcomes. (Up to 10 points)

(vi) How the applicant will ensure that a diversity of perspectives are brought to bear in the operation of the proposed project, including those of parents, teachers, the business community, a variety of disciplinary and professional fields, recipients or beneficiaries of services, or others, as appropriate. (Up to 10 points)

(b) *Quality of project personnel.* (Up to 20 points)

(1) The Secretary considers the quality of the personnel who will carry out the proposed project.

(2) In determining the quality of project personnel, the Secretary considers the extent to which the applicant encourages applications for employment from persons who are members of groups that have traditionally been underrepresented based on race, color, national origin, gender, age, or disability. (Up to 10 points)

(3) In addition, the Secretary considers the qualifications, including relevant training and experience, of key project personnel. (Up to 10 points)

(c) *Adequacy of resources.* (Up to 15 points)

(1) The Secretary considers the adequacy of resources for the proposed project.

(2) In determining the adequacy of resources for the proposed project, the Secretary considers the following factors:

(i) The extent to which the technical assistance services to be provided by the proposed project involve the use of efficient strategies, including the use of technology, as appropriate, and the leveraging of non-project resources. (Up to 10 points)

(ii) The extent to which the budget is adequate to support the proposed project. (Up to 5 points)

2. *Review and Selection Process:* The Department reminds potential applicants that in reviewing applications in any discretionary grant competition, the Secretary may consider, under 34 CFR 75.217(d)(3), the past performance of the applicant in carrying out a previous award, such as the applicant's use of funds, achievement of project objectives, and compliance with grant conditions. The Secretary may also consider whether the applicant failed to submit a timely performance report or submitted a report of unacceptable quality.

In addition, in making a competitive grant award, the Secretary also requires various assurances including those applicable to Federal civil rights laws that prohibit discrimination in programs or activities receiving Federal financial assistance from the Department of Education (34 CFR 100.4, 104.5, 106.4, 108.8, and 110.23).

3. *Risk Assessment and Special Conditions:* Consistent with 2 CFR 200.206, before awarding grants under this program the Department conducts a review of the risks posed by applicants. Under 2 CFR 200.208, the Secretary may impose special conditions and, under 2 CFR 3474.10, in appropriate circumstances, high-risk conditions on a grant if the applicant or grantee is not financially stable; has a history of unsatisfactory performance; has a financial or other management system that does not meet the standards in 2 CFR part 200, subpart D; has not fulfilled the conditions of a prior grant; or is otherwise not responsible.

4. *Integrity and Performance System:* If you are selected under this competition to receive an award that over the course of the project period may exceed the simplified acquisition threshold (currently $250,000), under 2 CFR 200.206(a)(2) the Department must make a judgment about your integrity, business ethics, and record of performance under Federal awards—that is, the risk posed by you as an applicant—before we make an award. In doing so, we must consider any information about you that is in the integrity and performance system (currently referred to as the Federal Awardee Performance and Integrity Information System (FAPIIS)), accessible through the System for Award Management. You may review and comment on any information about yourself that a Federal agency previously entered and that is currently in FAPIIS.

Please note that, if the total value of your currently active grants, cooperative agreements, and procurement contracts from the Federal Government exceeds $10,000,000, the reporting requirements in 2 CFR part 200, Appendix XII, require you to report certain integrity information to FAPIIS semiannually. Please review the requirements in 2 CFR part 200, Appendix XII, if this grant plus all the other Federal funds you receive exceed $10,000,000.

5. *In General:* In accordance with the Office of Management and Budget's guidance located at 2 CFR part 200, all applicable Federal laws, and relevant Executive guidance, the Department will review and consider applications for funding pursuant to this notice inviting applications in accordance with:

(a) Selecting recipients most likely to be successful in delivering results based on the program objectives through an objective process of evaluating Federal award applications (2 CFR 200.205);

(b) Prohibiting the purchase of certain telecommunication and video surveillance services or equipment in alignment with section 889 of the National Defense Authorization Act of 2019 (Pub. L. 115–232) (2 CFR 200.216);

(c) Providing a preference, to the extent permitted by law, to maximize use of goods, products, and materials produced in the United States (2 CFR 200.322); and

(d) Terminating agreements in whole or in part to the greatest extent authorized by law if an award no longer effectuates the program goals or agency priorities (2 CFR 200.340).

VI. Award Administration Information

1. *Award Notices:* If your application is successful, the Department notifies your U.S. Representative and U.S. Senators and sends you a Grant Award Notification (GAN); or we may send you an email containing a link to access an electronic version of your GAN. We may notify you informally, also.

If your application is not evaluated or not selected for funding, we notify you.

2. *Administrative and National Policy Requirements:* We identify administrative and national policy requirements in the application package and reference these and other requirements in the *Applicable Regulations* section of this notice.

We reference the regulations outlining the terms and conditions of an award in the *Applicable Regulations* section of this notice and include these and other specific conditions in the GAN. The GAN also incorporates your approved application as part of your binding commitments under the grant.

3. *Open Licensing Requirements:* Unless an exception applies, if you are awarded a grant under this competition, you will be required to openly license to the public grant deliverables created in whole, or in part, with Department grant funds. When the deliverable consists of modifications to pre-existing works, the license extends only to those modifications that can be separately identified and only to the extent that open licensing is permitted under the terms of any licenses or other legal restrictions on the use of pre-existing works. Additionally, a grantee or subgrantee that is awarded competitive grant funds must have a plan to disseminate these public grant deliverables. This dissemination plan can be developed and submitted after your application has been reviewed and selected for funding. For additional information on the open licensing requirements please refer to 2 CFR 3474.20.

4. *Reporting:* (a) If you apply for a grant under this competition, you must ensure that you have in place the necessary processes and systems to comply with the reporting requirements in 2 CFR part 170 should you receive funding under the competition. This does not apply if you have an exception under 2 CFR 170.110(b).

(b) At the end of your project period, you must submit a final performance report, including financial information, as directed by the Secretary. If you receive a multiyear award, you must submit an annual performance report that provides the most current performance and financial expenditure information as directed by the Secretary under 34 CFR 75.118. The Secretary may also require more frequent performance reports under 34 CFR 75.720(c). For specific requirements on reporting, please go to *www.ed.gov/fund/grant/apply/appforms/appforms.html.*

(c) Under 34 CFR 75.250(b), the Secretary may provide a grantee with additional funding for data collection analysis and reporting. In this case the Secretary establishes a data collection period.

5. *Performance Measures:* For purposes of Department reporting under 34 CFR 75.110, we have established the following performance measures for the EAC program:

Measure 1: The percentage of clients reporting an increase in awareness or knowledge resulting from technical assistance provided.

Measure 2: The percentage of clients who report changed policies or practices related to providing students with a full opportunity for participation in all educational programs regardless of their sex, race, religion, and national origin.

Measure 3: The percentage of clients reporting an increase in capacity resulting from technical assistance provided.

Measure 4: The percentage of technical assistance requests received from organizations that were accepted during the performance period.

Measure 5: The percentage of clients willing to request additional technical assistance or refer another organization to an EAC for technical assistance during the performance period.

Measure 6: The percentage of clients who report that outcomes, as documented in memoranda of understanding with EACs, were met as a result of the technical assistance provided.

Note: Measure 6 is a new performance measure for this program. The Department removed the measure on the percentage of technical assistance requests received from new (not previously served by the EAC) organizations during the performance period.

All grantees will be expected to submit, as part of their annual and final performance reports, quantitative data documenting their progress with regard to these performance measures.

Project-Specific Performance Measures: An applicant may propose measures specific to that applicant's proposed project. If an applicant chooses to propose such project-specific measures, the application must provide the following information as directed under 34 CFR 75.110(b): How each proposed measure would accurately measure the performance of the project and how the proposed measure would be consistent with the performance measures established for this program.

6. *Continuation Awards:* In making a continuation award under 34 CFR 75.253, the Secretary considers, among other things: Whether a grantee has made substantial progress in achieving the goals and objectives of the project; whether the grantee has expended funds in a manner that is consistent with its approved application and budget; and, if the Secretary has established performance measurement requirements, the performance targets in the grantee's approved application.

In making a continuation award, the Secretary also considers whether the grantee is operating in compliance with the assurances in its approved application, including those applicable to Federal civil rights laws that prohibit discrimination in programs or activities receiving Federal financial assistance from the Department (34 CFR 100.4, 104.5, 106.4, 108.8, and 110.23).

VII. Other Information

Accessible Format: On request to the program contact person listed under **FOR FURTHER INFORMATION CONTACT**, individuals with disabilities can obtain this document and a copy of the application package in an accessible format. The Department will provide the requestor with an accessible format that may include Rich Text Format (RTF) or

text format (txt), a thumb drive, an MP3 file, braille, large print, audiotape, or compact disc, or other accessible format.

Electronic Access to This Document: The official version of this document is the document published in the **Federal Register**. You may access the official edition of the **Federal Register** and the Code of Federal Regulations at *www.govinfo.gov.* At this site you can view this document, as well as all other documents of this Department published in the **Federal Register**, in text or Portable Document Format (PDF). To use PDF you must have Adobe Acrobat Reader, which is available free at the site.

You may also access documents of the Department published in the **Federal Register** by using the article search feature at *www.federalregister.gov.* Specifically, through the advanced search feature at this site, you can limit your search to documents published by the Department.

Ruth E. Ryder,

Deputy Assistant Secretary for Policy and Programs, Office of Elementary and Secondary Education.

[FR Doc. 2022–03208 Filed 2–14–22; 8:45 am]

BILLING CODE 4000–01–P

DEPARTMENT OF ENERGY

Notice of Intent and Request for Information Regarding Establishment of a Civil Nuclear Credit Program

AGENCY: Office of Nuclear Energy, Department of Energy.

ACTION: Notice of intent (NOI); request for information (RFI).

SUMMARY: The Infrastructure Investment and Jobs Act (IIJA or the Act) directs the Secretary of Energy (Secretary) to establish a Civil Nuclear Credit (CNC) Program to evaluate and certify nuclear reactors that are projected to cease operations due to economic factors and to allocate credits to selected certified nuclear reactors via a sealed bid process. The U.S. Department of Energy (DOE or the Department) is issuing this NOI to notify interested parties of DOE's intent to solicit applications for certification of nuclear reactors for eligibility to submit of sealed bids for CNC Program credits from nuclear reactor owners or operators that are at risk of ceasing operations due to economic factors and intent to request sealed bids from certified reactors for allocation of available credits. The NOI provides an opportunity for interested parties to submit to the Department a non-binding notice of their interest in submitting a confidential application for the CNC Program. The Department also seeks input from all stakeholders through this RFI regarding the establishment of a CNC Program including the application, certification, and selection processes.

DATES: Written comments and information are requested on or before March 17, 2022. The Department intends to develop initial draft guidance for the certification applications during the NOI/RFI comment period. It is strongly preferred that respondents comment on issues affecting certification directly via the email address below by March 8, 2022. Comments relating to the certification received after this date may not be included guidance development.

ADDRESSES: Interested parties may submit comments by any of the following methods:

1. Email: rfi-cnc@nuclear.energy.gov (Strongly Preferred). Submit electronic comments in Microsoft Word or PDF file format and avoid the use of special characters or any form of encryption. Please include ''Response to RFI'' in the subject line.

2. Online: www.regulations.gov. Submit all electronic public comments to *www.regulations.gov.* Click on the ''Comment'' icon, complete the required fields, and enter or attach your comments.

Instructions: All submissions received must include the agency name for this RFI. No facsimiles (faxes) will be accepted. Any information that may be business proprietary and exempt by law from public disclosure should be submitted as described in Section IX.

Although DOE has routinely accepted public comment submissions through a variety of mechanisms, including postal mail and hand delivery/courier, DOE has found it necessary to make temporary modifications to the comment submission process in light of the ongoing COVID–19 pandemic. DOE is currently accepting only electronic submissions at this time. If a commenter finds that this change poses an undue hardship, please contact Office of Nuclear Energy staff at (202) 586–6231 to discuss the need for alternative arrangements. Once the COVID–19 pandemic health emergency is resolved, DOE anticipates resuming all of its regular options for public comment submission, including postal mail and hand delivery/courier.

FOR FURTHER INFORMATION CONTACT: Requests for additional information may be sent to: *rfi-cnc@nuclear.energy.gov.* Questions about the NOI may be addressed to Alden Allen at (208–526–7093). Questions about the RFI may be addressed to Kelly Lefler at (202–586–6231).

SUPPLEMENTARY INFORMATION:

I. Background

Advancing U.S. clean energy, energy security, and economic competitiveness enabled by reliable electricity generation is a priority of the Administration.[1] As energy markets and economic circumstances continue to shift, multiple zero-emission nuclear generation assets are at risk for early closure, and several have already closed prematurely due to economic circumstances. Such closures have resulted in increased air pollution in communities, including disadvantaged communities, where fossil generation has replaced lost nuclear generation, materially impeded the national goal of carbon pollution-free electricity by 2035, and cost the nation thousands of high-quality union jobs. Further closures threaten to exacerbate these issues. Congress has appropriated funds to be allocated by DOE, using a credit allocation process, to certified nuclear reactors to prevent closure of carbon-free nuclear generation due to economic factors. DOE intends to execute the CNC Program in a manner that maximizes its contribution to the national objectives of clean energy generation, energy security and stability, and economic competitiveness.

The IIJA directs the Secretary to certify operating nuclear reactors under the CNC Program based on determinations that each reactor is projected to cease operations due to economic factors, that cessation of operations would result in a projected increase in air pollutants, and that the U.S. Nuclear Regulatory Commission (NRC) has reasonable assurance that the reactor will continue to operate safely. Congress has appropriated $6 billion to fund credits awarded under the CNC Program and has authorized the Secretary to obligate up to $1.2 billion in Fiscal Year 2022. Amounts in excess of $1.2 billion required to fund awarded credits for subsequent fiscal years can be disbursed subject to the availability of funds.

As required by the Act, the Secretary will certify those reactors that meet the criteria for CNC Program eligibility, establish a process for submittal of sealed bids from certified reactors, and allocate credits to selected certified reactors, noting certain priority

[1] The White House, Fact Sheet: President Biden's Leaders Summit on Climate, April 23, 2021, *available at https://www.whitehouse.gov/briefing-room/statements-releases/2021/04/23/fact-sheet-president-bidens-leaders-summit-on-climate/.*

considerations. Credits will be awarded over a 4-year period beginning on the date of the selection. Nuclear reactor owners or operators may apply for recertification after that time and additional credits may be allocated through September 30, 2031, subject to the availability of funds.

To be certified by DOE for eligibility to submit a bid for credits, a nuclear reactor must meet certain economic and other criteria. The Act delineates specific eligibility criteria and provides discretion for the Secretary to define additional eligibility criteria for certification of a qualifying nuclear reactor. The Secretary intends to issue a detailed Request for Applications for Certification (Request for Applications) and, from certified reactors, request sealed bids. Such Request for Applications will explain the evaluation framework and criteria for certification. The requirements of the subsequent sealed bid auction for credits may be published either in the Request for Applications or a subsequent guidance document. In establishing and administering the CNC Program, DOE will comply with all applicable statutes and regulations, including those requiring environmental review processes.

II. Purpose

This NOI/RFI provides notice of DOE's intent to establish and implement the CNC Program and solicits feedback regarding the proposed approach described in this NOI/RFI. DOE's proposed approach includes a Request for Applications to certify nuclear reactors for eligibility to submit bids for allocation of credits. DOE intends to evaluate such applications and certify reactors meeting the statutory requirements and then conduct a competitive bidding process for bids from certified nuclear reactors for allocation of available credits, and establish a periodic audit, as specified in section 40323 of the Act. In addition, DOE requests that interested parties submit to the Department a confidential, non-binding notice of their interest in submitting a confidential application for the CNC Program.

III. Proposed Approach

DOE proposes the following key elements and related rationale to guide its evaluation of applications for certification. DOE intends to administer the CNC Program pursuant to the authority provided in the IIJA. Although DOE may develop a process that draws on concepts in the Federal Acquisition Regulation and Federal financial assistance regulations, those regulations do not govern the CNC Program. Therefore, terms such as ''application,'' ''proposal,'' or ''bid'' should be construed in the context of the CNC Program and not as commonly used in procurement or financial assistance actions. Feedback is solicited on each element, as well as the overall approach described.

(1) *Inclusivity.* Pursuant to section 40323(e)(3) of IIJA, DOE intends to utilize, to the maximum extent practicable, spending authority created by the Act to *allocate credits to as many certified nuclear reactors as possible.* DOE encourages the submission of applications for certification from all operating nuclear reactors that project ceasing operation due to economic factors and meet other criteria as specified.

(2) *Confidentiality.* DOE will protect confidential, private, proprietary, or privileged business information from public release as allowed by statute and regulation unless otherwise approved by the applicant. Unless and until an applicant receives an award, DOE will treat the identity of each applicant and other identifying information as confidential business information for purposes of the Freedom of Information Act.

(3) *Acceptance of Applications.* The Act directs that the Secretary accept reactor certification applications for 120 days following the Act's enactment, after which time the Secretary will evaluate and issue a decision on certification within 60 days. Reactors that receive State assistance including State zero-emission credits, State clean energy contracts, or other State program assistance may apply for certification beginning after the initial 120-day period. All non-certified reactors may apply during subsequent annual application periods. DOE proposes that applications for certification should be submitted for each individual reactor seeking credits. An exception is offered if the applicant asserts that there are multiple units at a given site with substantially identical financial situations, operations structures, and costs in which case a single application can be made for multiple reactors. In this circumstance, DOE proposes that the applicant should delineate in the single application the attributes of each individual reactor.

(4) *Standards of Analyses and Representation.* Recognizing that the economic factors facing each reactor are specific to each owner and/or operator, and further recognizing that operating and market assessments may be inherently uncertain, DOE proposes to request that applicants for certification make a representation of the economic situation of the reactor. Applicants may be required to provide their modeling approach, data, and methodology to support their claim of projected ceasing operations, and describe how its modeling approach, data, and methodology are consistent with those it makes for other business planning and filings, or fully explain any inconsistencies. DOE seeks comment on whether it should establish a standard modeling approach and methodology that each applicant must complete as part of the application for certification in addition to, or instead of, any modeling approach and methodology that an applicant may propose. DOE anticipates that applicants will provide both publicly available and privately held data to validate the assumptions, data and methodologies used. DOE also anticipates that the rules governing the protection of business proprietary and procurement sensitive information may apply to the documentation submitted by applicants. As such, applicants will be expected to mark all submitted documents appropriately as described in Section IX.

(5) *Evaluation of Applications for Certification.* DOE proposes to establish a review process, using a review panel comprised of DOE personnel. The panel will verify that the applicant has addressed each relevant aspect of certification, consistent with requirements and evaluation criteria as specified in the Request for Application.

(6) *NRC Assurance.* DOE intends to rely on the NRC to indicate whether they have reasonable assurance that a reactor will continue to be operated in accordance with the current licensing basis and poses no significant safety hazards.

(7) *Consultation with Heads of Other Agencies.* The Secretary will establish a process for the evaluation of bids in consultation with the heads of other applicable federal agencies.

(8) *Terminology.* For the purposes of the CNC Program, DOE proposes that the term ''credit'' describes a claim to funds appropriated by the Act and administered through the CNC Program to successful applicants. A ''reactor'' is defined as an individual unit.

(9) *Credit Allocation and Funds Disbursement.* DOE intends to allocate credits to as many certified nuclear reactors as possible consistent with the intent of the Act. Each award is intended to cover a 4-year period, with funds distributed annually based on the allocation of credits. DOE may obligate up to $1.2 billion of appropriated funds in Fiscal Year 2022 for the CNC Program and amounts in excess of $1.2 billion

required to fund awarded credits for subsequent fiscal years will be subject to the availability of funds.

(10) *Audit.* Market and operations circumstances may change over the award period, and the economic loss forecasted in the nuclear reactor's original bid may, in practice, be over- or underestimated. DOE intends to conduct a periodic audit of awardees, requesting a yearly operational and economic report from each awardee to assess any divergences from the projections made at the time of certification and the actual situation in each year with respect to economic circumstances and status of the awardee's contractual commitments, such as megawatt-hours produced and other applicable contractual requirements. The schedule for annual reporting and funds disbursement will be determined by DOE and will consider the awardee's business processes, to the extent practical.

(11) *Adjustment.* In the event that actual economic performance during the period is such that the nuclear reactor did ''not operate at an annual loss in the absence of an allocation of credits,'' section 40323(g)(2) of the Act requires DOE to provide for recapture of allocated credits. As a means to reduce the need for recapture, it may be appropriate for DOE to create an annual settlement mechanism through which the value of a reactor's credit allocation would be adjusted based on the bundle of market prices to which it is exposed. In this manner, several State zero emissions credits (ZEC) programs use market indices to adjust ZEC values. Applicants may be required to propose an index mechanism or a strike price against which market price values would be netted, or DOE may select a generic index or indexing methodology to be applied to all applications. If an indexing mechanism is employed, DOE proposes the index should be tied to economic factors related to the nuclear reactor's operating profit or loss, and might include, for example, change in energy and capacity prices and benefits received from federal and state programs such as tax credits that reduce economic loss. It may also be prudent to place a ceiling on the adjusted credit value, for example to ensure that falling market prices do not cause DOE to owe more in a given fiscal year than its total amount of appropriated funds available.

(12) *Recapture.* If an adjustment to allocated credits as described above is not possible despite material changes in economic performance, or if the reactor terminates operations, DOE may recapture the allocation of credits in part or in whole in accordance with the Act. The Act directs the Secretary to provide for the recapture of an allocation of credits from a nuclear reactor if the nuclear reactor (a) terminates operations; or (b) does not operate at an annual loss in the absence of an allocation of credits.

In addition to feedback on each element described, specific questions regarding the design of the CNC Program are provided in Section VI.

IV. Certification Criteria

To implement the requirements of the CNC Program, DOE will establish a certification process to solicit applications from reactor owners and operators to establish eligibility for certification to be eligible to submit a sealed bid for allocation of credits. The applicant representing a nuclear reactor that is projected to cease operations due to economic factors will be required to submit to the Secretary information necessary to meet the minimum criteria to be certified. The Secretary will evaluate this information to determine if the nuclear reactor meets the minimum certification requirements to be eligible to submit a bid to be allocated credits, as established in section 40323(c)(2)(A)(ii) of the Act. DOE intends to evaluate seven certification categories as outlined in the Act. These categories include:

- Category 1—Competitive Electricity Market: The applicant must demonstrate that the nuclear reactor competes in a competitive electricity market.
- Category 2—Economic Factors: The applicant must demonstrate that the nuclear reactor is projected to cease operations due to economic factors. Applicants must include information on the operating costs necessary to make the certification determination, including, but not limited to, average annual operating loss per megawatt hour over the 4-year period for which credits would be allocated.
- Category 3—Emissions Impact: The applicant must estimate the potential incremental air pollutants that would result if the nuclear reactor were to cease operation. Applicants must demonstrate an increase in these emissions if operations of the nuclear reactor were to cease and the power generation were replaced with other types of generation.
- Category 4—Post-Support Operations Plan: The applicant must provide a plan to sustain operation of the reactor after the 4-year award period, either without future credits or with a reduced level of credits.
- Category 5—Uranium and Fuel Source: The applicant must identify, to the extent known, where fuel for the reactor will be sourced over the 4-year period for which credits may be allocated, including the uranium, conversion, enrichment, and fabrication source. In determining whether to certify a reactor, priority will be given to a nuclear reactor that uses, to the maximum extent available, uranium that is produced, converted, enriched, and fabricated into fuel assemblies in the United States.
- Category 6—NRC Assurance: The NRC has reasonable assurance the reactor will continue to be operated in accordance with the current licensing basis and poses no significant safety hazards.
- Category 7—Other Criteria: Other criteria that may be identified by the Secretary to be considered in certification.

A general description of DOE's proposed evaluation consideration in each certification category is described below. Feedback is solicited regarding the intent and rationale described in each category, and/or terminology used and other aspects of the proposed criteria or additional criteria that might be considered. Additional, specific questions regarding the proposed evaluation considerations are provided in Section VI.

Category 1—Compete in a Competitive Electricity Market

To be eligible for certification, section 40323(a) of the Act requires that a nuclear reactor ''competes in a competitive electricity market.'' DOE proposes to interpret the Act as independent of reactor ownership. That is, a reactor may be deemed to compete in a competitive electricity market regardless of whether it is owned by a merchant generation company, a regulated utility, a public power utility, or another entity. DOE proposes the applicant should describe in detail how it competes in a competitive electricity market based on its exposure to market prices and other factors. DOE solicits comment on whether and under what circumstances the following commercial arrangements would qualify as competing in a competitive market:

- Market dispatch (*i.e.,* based on bids) by an Independent System Operator or Regional Transmission Organization (*e.g.,* ISO New England, New York Independent System Operator, PJM Interconnection, Midcontinent Independent System Operator, Electric Reliability Council of Texas, Southwest Power Pool, and California Independent System Operator) in a real time energy market;
- Participation in another market-based selection mechanism for

electricity services such as a capacity market, ancillary services market, or day-ahead energy market;

- Sales from the nuclear reactor using Federal Energy Regulatory Commission market-based rate authority;
- Merit order dispatch (*i.e.,* based on economics and impact on total system costs) by a vertically integrated utility; and
- Selection in an all-source competitive solicitation process administered by a State public utility commission.

Category 2—Economic Factors

Section 40323(c) of the Act sets out the requirements for certification of an eligible nuclear reactor. To be eligible for certification, the Act requires that the nuclear reactor is projected to cease operations due to economic factors. DOE proposes that:

(a) Economic factors include, but are not limited to, the following: Anticipated cost of producing electricity; anticipated market pricing, including all out-of-market revenues; regulated revenues; monetization of risk using reasonable and appropriate methods for the specific market, which may include impacts of renewable and clean energy mandates, energy source and delivery mandates, and others; operations and maintenance costs; capital costs, including depreciation and amortization; administrative costs, including corporate and similar allocations; and accounting for the operational risk and market risks faced. The sum of these factors provides a projection of the average profit, or loss, associated with the ongoing operation of the reactor, for each year in the prospective 4-year award period. Information will be requested for each year of the 4-year period, showing anticipated yearly changes (*e.g.,* outages, etc.). To be certified as eligible to submit a bid for credits, DOE proposes that the nuclear reactor must demonstrate that it projects an average annual operating loss over the 4-year period for which credits would be allocated.

(b) Consistent with the Act, DOE will consider all sources of revenue that a nuclear power owner or operator receives or expects to receive in the 4-year period during which credits would be allocated. For example, revenue may come from short-term power sales, power contracts, electricity and capacity markets, ZEC payments, revenue from other energy services (*i.e.,* ancillary services), revenue from other products (*e.g.,* heat energy, desalinated water, and hydrogen), and other federal and state programs, including tax credits. With respect to a regulated or public power utility (*e.g.,* with cost recovery in retail rates) revenue would also include amounts collected in rates relating to or arising from the nuclear reactor for which certification is sought.

(c) The representation of economic circumstance should be made by the reactor owner or operator, consistent with market analyses, operations cost assessments, risk (operations, business, market, or other) monetization and analyses, and other standards used by the owner or operator in their standard business process associated with the specific reactor(s).

(d) The application for certification should clearly state what business, operational, and market risk is relevant to the operating unit profitability, and how those risks are monetized. DOE proposes to interpret the Act as considering a wide range of business, operational, and market risk factors. Any such risk that may result in the early closure of an operating nuclear reactor would be relevant. Applicants should explain each risk and provide estimates of the financial/economic impact of the risk for the nuclear reactor. DOE is seeking comment on types of risk to consider and whether it should consider a wide range of risk factors.

(e) The applicant should provide the analysis used to calculate its economic circumstance and a description of key factors and inputs used in these analyses, describe the sensitivity of the analyses to key factors, discuss uncertainties associated with the projections, and describe why the assumptions used in the analyses and the inputs are reasonable based on the applicant's market circumstance.

(f) The revenue assessment used to calculate economic circumstance must include all payments projected to be received as a result of State and Federal support programs. If such funds, or a portion of such funds, would cease if an award is made by the CNC Program, then this expected change should be reflected in the assessment.

(g) The applicant should describe how the method of analyses of economic circumstance is consistent with that used in other decision making (*e.g.,* rate cases, tax filings, insurance statements, filings with the Securities and Exchange Commission), or why there would be a difference in the method or outcome of analyses.

Category 3—Emissions Impact

To be eligible for certification, the applicant must provide an estimate of the impact of reactor closure on emission of air pollutants. The Secretary must assess this information and determine that emission of air pollutants would reasonably be expected to increase if the reactor ceases operations. DOE proposes to consider estimates containing the following information:

(a) Assessment of the impact on emissions based on the six (6) criteria air pollutants (carbon monoxide, lead, ground-level ozone, particulate matter, nitrogen dioxide, and sulfur dioxide) defined by the U.S. Environmental Protection Agency (EPA), as well as carbon dioxide and methane.

(b) Air emissions estimates based on the emissions characteristics of the capacity and electricity generation expected to replace the capacity and electricity generation supplied by the reactor.

(c) A description of how the applicant arrived at the estimate of emissions impacts.

Category 4—Post-Support Operations Plan

To be eligible for certification, the applicant must provide a detailed plan to sustain operations at the conclusion of the award period. The Act states that this plan may include a planning basis of either receiving additional support (credits) at a reduced level than anticipated for the initial award period or one where no additional support (credits) is received. DOE recognizes that at the time of application for certification, the applicant will not know what level of assistance may be provided through the CNC Program, and that post-support operations plans will be uncertain because of this and other factors. DOE proposes that:

(a) The required detailed plan to sustain operations post-support include an overview description of actions that may be taken by the applicant after the award period, possible changes in market conditions over the 4-year award period, or other circumstances or factors that may be anticipated during the award period that will alter the economic assessment provided and the level of requested assistance (credits).

(b) The assessment of post-award planning should be consistent with analyses, assumptions, data, and methodologies used in declaring the economic circumstance of the reactor (Category 2 previously), while accounting for impact of receiving some level of assistance (credits).

Category 5—Uranium and Fuel Source

The Act requires an applicant for certification to provide information on the source of the uranium and the location where it is processed and

manufactured into fuel. DOE proposes that:

(a) The applicant includes in the application for certification information regarding the countries of origin of the uranium planned to be used in the award period, where it was/will be converted and enriched, and where the fuel was/will be fabricated, to the extent this is known or can be reasonably estimated.

(b) The certification requirements do not include any specific sourcing requirement in determining whether to certify, but that priority be given to reactors that use, to the maximum extent available, uranium that is produced, converted, enriched and fabricated into fuel assemblies in the United States.

Category 6—NRC Assurance

The Act requires that the NRC has reasonable assurance that the nuclear reactor will continue to operate in accordance with its current licensing basis and that it poses no significant safety hazards. DOE intends to rely on input from the NRC to meet this requirement.

Category 7—Other Information

The Act provides the Secretary authority to require an applicant to submit other information the Secretary determines to be appropriate in meeting the fundamental objective of the Act—to enable clean and safe energy generation. This other information may include external and internal impacts to the applicant (*i.e.,* owner or operator of a nuclear reactor) that may not be covered in the above-stated certification criteria. Relevant questions as to whether DOE should consider additional criteria for certification are included in Section VI.

V. Civil Nuclear Credit Program Process

Key steps in the process that DOE proposes for the Civil Nuclear Credit Program are described below, including evaluation of applications for certification, bids for credits, credit allocation, and funds distribution. DOE requests feedback on each element of the process, as well as on the specific questions described in Section VI.

a. Evaluation of Applications for Certification. As provided in section 40323(c)(1)(B) of the Act, certification applications from nuclear reactors not presently receiving assistance from State programs will be accepted during the initial application period. DOE will evaluate all submissions and determine eligibility for certification within 60 days, including notifying each applicant if the application was certified or describing the reasons why the certification was denied. DOE may request additional information after submission of initial applications. After the initial application period described above, DOE will conduct another application period for certification of nuclear reactors that are receiving State assistance, and others that had not previously applied. DOE intends to establish an annual application process following these initial application periods for all non-certified reactors.

DOE intends to establish a review panel to evaluate applications for certification. The review will consist of an assessment of whether the information and data provided by the applicant are sufficient to meet the requirements for certification as stated in the Act and articulated in the Request for Applications of a nuclear reactor.

The Secretary will make the final determination on certification. If a nuclear reactor is certified, the applicant will be invited to submit a sealed bid for credits.

b. Bids for Credits. DOE proposes to establish a process for certified nuclear reactors to submit sealed bids for credits with a deadline that is not more than 30 days following notification of the nuclear reactor's certification. The sealed bids should include the information and data outlined in section 40323(d) of the Act. Bidders should submit bids for credits which describe a price per megawatt-hour and commitment to provide generation in megawatt-hours for a 4-year period.

c. Allocation of Credits and Funds Distribution. DOE will establish a review panel, which may be comprised of the same experts as described in the Evaluation of Applications for Certification above, to evaluate submitted sealed bids for credits from certified nuclear reactors. The review panel will evaluate the bids and make its recommendation to the Secretary for selection of certified nuclear reactors to be allocated credits. DOE proposes to award credits by starting with the most cost-effective bids and proceeding until available funds are exhausted. DOE intends to allocate as many credits as available funds allow over the lifetime of the program.

VI. Questions for Request for Information

With this RFI, DOE seeks comments regarding all elements of the proposed approach for the CNC Program described in the previous sections. In addition, DOE seeks comment on the following specific questions:

(1) Do the proposed approach and considerations for certification of a qualified nuclear reactor, including key aspects of CNC Program implementation and other aspects and outcomes of the CNC Program, as described in Section III, support the intent of Congress to assist nuclear reactors at risk of early closure? Why or why not? If not, please suggest alternative approaches to be considered.

(2) Are the evaluation criteria being considered for certification as described in this RFI appropriate? If not, please suggest alternative criteria.

(3) Is the information requested for the applications for certification appropriate and sufficient? Why or why not?

(4) Is the proposed CNC Program structure, including timing, process, and evaluation approach for certification, acceptance of bids, credit allocation, and periodic audits appropriate? If not, please suggest alternatives.

(5) Please identify any regulatory or business barriers that might impede the implementation of the CNC Program. Please propose solutions to eliminate or mitigate any identified barriers.

(6) Should DOE establish a standard format and methodology for each applicant to present economic data, projections, analysis, and other information in support of an application for certification? If so, please address the components that should be included as part of a standard format and methodology and what information should be required.

(7) What information should be considered by the Secretary in assessments of the marginal impact of projected reactor closures on emission of air pollutants? Should a standard methodology be adopted to address estimation of incremental air pollutants? Why or why not? What methodologies could be considered?

(8) How should the certification methodology prioritize reactors that utilize U.S.-produced fuel and fuel constituents? Are there additional criteria that should be prioritized, and if so, how?

(9) Is the use of an indexing mechanism to re-set annually the value of credits allocated to a nuclear reactor as described herein appropriate? Please consider the advantages and disadvantages of such an approach and the basis for such an approach. Should the indexing mechanism be subject to a floor and/or cap? How would an indexing mechanism interact with the recapture provision discussed herein?

(10) Using the bid requirements in the Act of price per megawatt-hour and megawatt-hour commitment for a 4-year

period, should DOE award credits starting with the lowest price bid and continuing until available funds are exhausted? What policy considerations or parameters other than bid price would inform the determination of which bids would most cost-effectively achieve the objectives of the Act? Should DOE use any other methodology or criteria for awarding credits to bidders?

(11) How should DOE incorporate evaluation of the impacts of the closure or continued operation of nuclear reactors on disadvantaged communities?

(12) Please provide any other input DOE should consider in the establishment and implementation of the CNC Program, including any other information and criteria that might be useful in DOE's approach for and implementation of both the certification process and the sealed-bid process for credits.

DOE requests expedited submission of comments on the proposed approach to certification and the specific questions with respect to certification.

VII. Request for Statements of Interest

DOE intends to solicit applications for certification and, for certified reactors, sealed bids. In order to provide advance notice of the number and type of nuclear reactors (*i.e.,* those that are or are not receiving State support) that may wish to participate in the program, DOE is requesting non-binding statements of interest. Submissions that comply with relevant requirements outlined in Section IX regarding Business Proprietary Information will be kept confidential. Unless and until an applicant receives an award, DOE will treat the identity of each applicant and other identifying information as confidential business information for purposes of the Freedom of Information Act.

VIII. Response Guidelines

NOI responses shall include:

- NOI/RFI title and reference number;
- Name(s), phone number(s), and email address(es) for the principal point(s) of contact;
- Institution or organization affiliation and postal address; and
- Your organization's non-binding expression of interest in the CNC Program.

NOI responses shall be emailed directly to Alden Allen, DOE Contract Specialist, at: *noi-cnc@id.doe.gov.*

RFI responses shall include:

- NOI/RFI title and reference number;
- Name(s), phone number(s), and email address(es) for the principal point(s) of contact;
- Institution or organization affiliation and postal address; and
- Clear indication of the specific question(s) to which you are responding.

Responses including proprietary information will be handled per guidance in Section IX.

RFI responses shall be emailed to *rfi-cnc@nuclear.energy.gov* or submitted electronically to *www.regulations.gov,* as described previously.

IX. Business Proprietary Information

Pursuant to 10 CFR 1004.11, any person submitting information he or she believes to be business proprietary and exempt by law from public disclosure should submit via email two qwell-marked copies: One copy of the document marked ''Business Proprietary'' including all the information believed to be proprietary, and one copy of the document marked ''non-Proprietary'' deleting all information believed to be business proprietary. DOE will make its own determination about the business proprietary status of the information and treat it according to its determination. Factors of interest to DOE when evaluating requests to treat submitted information as business proprietary include: (1) A description of the items; (2) whether and why such items are customarily treated as business proprietary within the industry; (3) whether the information is generally known by or available from other sources; (4) whether the information has previously been made available to others without obligation concerning its business proprietary nature; (5) an explanation of the competitive injury to the submitting person which would result from public disclosure; (6) when such information might lose its business proprietary character due to the passage of time; and (7) why disclosure of the information would be contrary to the public interest.

Signing Authority

This document of the Department of Energy was signed on February 9, 2022, by Andrew Griffith, Deputy Assistant Secretary for Nuclear Fuel Cycle and Supply Chain, pursuant to delegated authority from the Secretary of Energy. That document with the original signature and date is maintained by DOE. For administrative purposes only, and in compliance with requirements of the Office of the Federal Register, the undersigned DOE Federal Register Liaison Officer has been authorized to sign and submit the document in electronic format for publication, as an official document of the Department of Energy. This administrative process in no way alters the legal effect of this document upon publication in the **Federal Register**.

Signed in Washington, DC, on February 9, 2022.

Treena V. Garrett,

Federal Register Liaison Officer, U.S. Department of Energy.

[FR Doc. 2022–03156 Filed 2–14–22; 8:45 am]

BILLING CODE 6450–01–P

DEPARTMENT OF ENERGY

Agency Information Collection Extension

AGENCY: Department of Energy.

ACTION: Notice of request for comments.

SUMMARY: The Department of Energy (DOE), pursuant to the Paperwork Reduction Act of 1995, intends to extend for three years, an information collection request with the Office of Management and Budget (OMB).

DATES: Comments regarding this proposed information collection must be received on or before April 18, 2022. If you anticipate any difficulty in submitting comments within that period, contact the person listed in the **FOR FURTHER INFORMATION CONTACT** section as soon as possible.

ADDRESSES: Written comments may be sent to Eric F. Mulch, Attorney-Adviser, by email at *eric.mulch@hq.doe.gov.*

FOR FURTHER INFORMATION CONTACT: Eric F. Mulch, Attorney-Adviser, at (202) 287–5746, or via email at *eric.mulch@hq.doe.gov.*

SUPPLEMENTARY INFORMATION: Comments are invited on: (a) Whether the extended collection of information is necessary for the proper performance of the functions of the agency, including whether the information shall have practical utility; (b) the accuracy of the agency's estimate of the burden of the proposed collection of information, including the validity of the methodology and assumptions used; (c) ways to enhance the quality, utility, and clarity of the information to be collected; and (d) ways to minimize the burden of the collection of information on respondents, including through the use of automated collection techniques or other forms of information technology.

This information collection request contains:

(1) *OMB No.:* 1910–5115.

(2) *Information Collection Request Titled:* Contractor Legal Management Requirements.

(3) *Type of Review:* Extension.

(4) *Purpose:* The information collection to be extended has been and will be used to form the basis for DOE actions on requests from the contractors for reimbursement of litigation and other legal expenses. The information collected related to annual legal budget, staffing and resource plans, and initiation or settlement of defensive or offensive litigation is and will be similarly used.

(5) *Annual Estimated Number of Respondents:* 45.

(6) *Annual Estimated Number of Total Responses:* 154.

(7) *Annual Estimated Number of Burden Hours:* 1150.

(8) *Annual Estimated Reporting and Recordkeeping Cost Burden:* 0.

Statutory Authority: Section 161 of the Atomic Energy Act of 1954, 42 U.S.C. 2201, the Department of Energy Organization Act, 42 U.S.C 7101, *et seq.,* and the National Nuclear Security Administration Act, 50 U.S.C. 2401, *et seq.*

Signing Authority

This document of the Department of Energy was signed on February 9, 2022, by Samuel T. Walsh, General Counsel, pursuant to delegated authority from the Secretary of Energy. That document with the original signature and date is maintained by DOE. For administrative purposes only, and in compliance with requirements of the Office of the Federal Register, the undersigned DOE Federal Register Liaison Officer has been authorized to sign and submit the document in electronic format for publication, as an official document of the Department of Energy. This administrative process in no way alters the legal effect of this document upon publication in the **Federal Register**.

Signed in Washington, DC, on February 10, 2022.

Treena V. Garrett,

Federal Register Liaison Officer, U.S. Department of Energy.

[FR Doc. 2022–03197 Filed 2–14–22; 8:45 am]

BILLING CODE 6450–01–P

DEPARTMENT OF ENERGY

Federal Energy Regulatory Commission

Sunshine Act Meeting Notices

TIME AND DATE: February 17, 2022, 10:00 a.m.

PLACE: Open to the public via audio Webcast only. Join FERC online to listen live at *http://ferc.capitolconnection.org/.*

STATUS: Open.

MATTERS TO BE CONSIDERED: Agenda.

* *Note*—Items listed on the agenda may be deleted without further notice.

CONTACT PERSON FOR MORE INFORMATION: Kimberly D. Bose, Secretary, Telephone (202) 502–8400.

For a recorded message listing items struck from or added to the meeting, call (202) 502–8627.

This is a list of matters to be considered by the Commission. It does not include a listing of all documents relevant to the items on the agenda. All public documents, however, may be viewed on line at the Commission's website at *https://elibrary.ferc.gov/eLibrary/search* using the eLibrary link.

1087TH—MEETING, OPEN MEETING

[February 17, 2022 10:00 am]

Item No.	Docket No.	Company
	ADMINISTRATIVE	
A–1	AD22–1–000	Agency Administrative Matters.
A–2	AD22–2–000	Customer Matters, Reliability, Security and Market Operations.
	ELECTRIC	
E–1	AD22–5–000	Implementation of Dynamic Line Ratings.
E–2	ER20–1718–002	New York Independent System Operator, Inc.
E–3	ER20–1068–003	The Dayton Power and Light Company.
E–4	EL19–47–002	Independent Market Monitor for PJM v. PJM Interconnection, L.L.C.
	EL19–63–002 (Consolidated)	Office of the People's Counsel for District of Columbia, Delaware Division of the Public Advocate, Citizens Utility Board, Indiana Office of Utility Consumer Counselor, Maryland Office of People's Counsel, Pennsylvania Office of Consumer Advocate, West Virginia Consumer Advocate Division, and PJM Industrial Customer Coalition v. PJM Interconnection, L.L.C.
	ER21–2877–001, ER21–2444–001 (Not consolidated).	PJM Interconnection, L.L.C.
E–5	ER21–2900–000, ER21–2900–001, ER21–2900–002, ER21–2900–003.	Duke Energy Carolinas, LLC.
E–6	EL22–26–000, ER22–957–000	PJM Interconnection, L.L.C.
E–7	ER18–1702–002	Southwest Power Pool, Inc.
E–8	EL17–21–001	Kansas Electric Power Cooperative, Inc. v. Southwest Power Pool, Inc.
E–9	EL18–9–001	Xcel Energy Services Inc. v. Southwest Power Pool, Inc.
E–10	ER20–2550–003	Entergy Mississippi, LLC.
E–11	OMITTED.	
E–12	ER21–1802–000	PJM Interconnection, L.L.C.
E–13	EC21–125–000	PSEG New Haven LLC, PSEG Power Connecticut LLC, PSEG Power New York LLC, and Generation Bridge II, LLC.
	EC21–128–000	PSEG Fossil LLC, PSEG Fossil Sewaren Urban Renewal LLC, PSEG Keys Energy Center LLC, PSEG Energy Resources & Trade LLC, Parkway Generation, LLC, and Parkway Generation Essex, LLC.
	GAS	
G–1	AD22–7–000	Oil Pipeline Capacity Allocation Issues and Anomalous Conditions.

1087TH—MEETING, OPEN MEETING—Continued

[February 17, 2022 10:00 am]

Item No.	Docket No.	Company
G–2	RP21–1187–002, RP21–1187–003	Eastern Gas Transmission and Storage, Inc.
HYDRO		
H-1	P–10853–022	Otter Tail Power Company.
H–2	P–2101–178	Sacramento Municipal Utility District.
H–3	P–2197–140	Cube Yadkin Generation LLC.
H–4	P–2997–032	South Sutter Water District.
Certificates		
C–1	PL18–1–000	Certification of New Interstate Natural Gas Facilities.
C–2	PL21–3–000	Consideration of Greenhouse Gas Emissions in Natural Gas Infrastructure Project Reviews.
C–3	CP17–40–012	Spire STL Pipeline LLC.

The public is invited to listen to the meeting live at *http://ferc.capitolconnection.org/.* Anyone with internet access who desires to hear this event can do so by navigating to *www.ferc.gov's* Calendar of Events and locating this event in the Calendar. The event will contain a link to its audio webcast. The Capitol Connection provides technical support for this free audio webcast. It will also offer access to this event via phone bridge for a fee. If you have any questions, visit *http://ferc.capitolconnection.org/* or contact Shirley Al-Jarani at 703–993–3104.

Issued: February 10, 2022.

Kimberly D. Bose,

Secretary.

[FR Doc. 2022–03332 Filed 2–11–22; 4:15 pm]

BILLING CODE 6717–01–P

DEPARTMENT OF ENERGY

Federal Energy Regulatory Commission

Combined Notice of Filings #1

Take notice that the Commission received the following electric rate filings:

Docket Numbers: ER16–2044–001.
Applicants: Elk Hills Power, LLC.
Description: Notice of Non-Material Change in Status of Elk Hills Power, LLC.
Filed Date: 2/8/22.
Accession Number: 20220208–5152.
Comment Date: 5 p.m. ET 3/1/22.

Docket Numbers: ER20–1719–004.
Applicants: PPL Electric Utilities Corporation, PJM Interconnection, L.L.C.
Description: Compliance filing: PPL Electric Utilities Corporation submits tariff filing per 35: PPL Electric submits compliance filing in ER20–1719 to be effective 1/27/2020.
Filed Date: 2/9/22.
Accession Number: 20220209–5126.
Comment Date: 5 p.m. ET 3/2/22.

Docket Numbers: ER20–2926–002.
Applicants: Altamont Winds LLC.
Description: Compliance filing: Altamont Winds LLC Change in Status to be effective 2/10/2022.
Filed Date: 2/9/22.
Accession Number: 20220209–5089.
Comment Date: 5 p.m. ET 3/2/22.

Docket Numbers: ER21–2438–003.
Applicants: Southwest Power Pool, Inc.
Description: Tariff Amendment: 3630SR1 Maverick Wind Project GIA—Deficiency Response to be effective 6/29/2021.
Filed Date: 2/9/22.
Accession Number: 20220209–5130.
Comment Date: 5 p.m. ET 3/2/22.

Docket Numbers: ER21–2990–000.
Applicants: MidAmerican Central California Transco, LLC.
Description: Annual Informational Appendix F, Schedule 3 filing of MidAmerican Central California Transco, LLC.
Filed Date: 9/29/21.
Accession Number: 20210929–5186.
Comment Date: 5 p.m. ET 3/2/22.

Docket Numbers: ER22–108–001.
Applicants: Southwest Power Pool, Inc.
Description: Tariff Amendment: Deficiency Response—Modify Minimum Capitalization Requirements to be effective 4/30/2022.
Filed Date: 2/9/22.
Accession Number: 20220209–5120.
Comment Date: 5 p.m. ET 3/2/22.

Docket Numbers: ER22–646–000.
Applicants: Horizon West Transmission, LLC.
Description: Annual Informational Appendix F, Schedule 3 filing of Horizon West Transmission, LLC.
Filed Date: 12/13/21.
Accession Number: 20211213–5257.
Comment Date: 5 p.m. ET 3/2/22.

Docket Numbers: ER22–1004–000.
Applicants: The Narragansett Electric Company.
Description: § 205(d) Rate Filing: 2022–02–08 Narragansett Borderline Tariff Amendment filing to be effective 2/9/2022.
Filed Date: 2/8/22.
Accession Number: 20220208–5131.
Comment Date: 5 p.m. ET 3/1/22.

Docket Numbers: ER22–1005–000.
Applicants: NorthWestern Corporation.
Description: § 205(d) Rate Filing: RS 257 2nd Rev, Regulation and Frequency Response Self-Supply Agreement with BPA to be effective 3/1/2022.
Filed Date: 2/9/22.
Accession Number: 20220209–5032.
Comment Date: 5 p.m. ET 3/2/22.

Docket Numbers: ER22–1006–000.
Applicants: PJM Interconnection, L.L.C.
Description: § 205(d) Rate Filing: Original WMPA, Service Agreement No. 6331; Queue No. AG2–012 to be effective 1/13/2022.
Filed Date: 2/9/22.
Accession Number: 20220209–5068.
Comment Date: 5 p.m. ET 3/2/22.

Docket Numbers: ER22–1007–000.
Applicants: New York Independent System Operator, Inc.
Description: § 205(d) Rate Filing: 205 EPC Agreement among NYISO, Holcim, Hecate Energy(SA 2670) to be effective 1/26/2022.
Filed Date: 2/9/22.
Accession Number: 20220209–5094.
Comment Date: 5 p.m. ET 3/2/22.

Docket Numbers: ER22–1008–000.
Applicants: AEP Texas Inc.
Description: § 205(d) Rate Filing: AEPTX–ETT (Salvare) Facilities

Development Agreement to be effective 1/27/2022.

Filed Date: 2/9/22.

Accession Number: 20220209–5105.

Comment Date: 5 p.m. ET 3/2/22.

Docket Numbers: ER22–1009–000.

Applicants: AEP Texas Inc.

Description: § 205(d) Rate Filing: AEPTX-Blue Sky Solar Generation Interconnection Agreement to be effective 2/1/2022.

Filed Date: 2/9/22.

Accession Number: 20220209–5116.

Comment Date: 5 p.m. ET 3/2/22.

Docket Numbers: ER22–1010–000.

Applicants: TerraForm IWG Acquisition Holdings II, LLC.

Description: Baseline eTariff Filing: Market-Based Rate Application to be effective 4/11/2022.

Filed Date: 2/9/22.

Accession Number: 20220209–5141.

Comment Date: 5 p.m. ET 3/2/22.

The filings are accessible in the Commission's eLibrary system (*https://elibrary.ferc.gov/idmws/search/fercgensearch.asp*) by querying the docket number.

Any person desiring to intervene or protest in any of the above proceedings must file in accordance with Rules 211 and 214 of the Commission's Regulations (18 CFR 385.211 and 385.214) on or before 5:00 p.m. Eastern time on the specified comment date. Protests may be considered, but intervention is necessary to become a party to the proceeding.

eFiling is encouraged. More detailed information relating to filing requirements, interventions, protests, service, and qualifying facilities filings can be found at: *http://www.ferc.gov/docs-filing/efiling/filing-req.pdf.* For other information, call (866) 208–3676 (toll free). For TTY, call (202) 502–8659.

Dated: February 9, 2022.

Debbie-Anne A. Reese,

Deputy Secretary.

[FR Doc. 2022–03209 Filed 2–14–22; 8:45 am]

BILLING CODE 6717–01–P

DEPARTMENT OF ENERGY

Federal Energy Regulatory Commission

[Project No. 5867–054]

Alice Falls Hydro, LLC; Notice of Application Accepted for Filing and Soliciting Motions To Intervene and Protests

Take notice that the following hydroelectric application has been filed with the Commission and is available for public inspection.

a. *Type of Application:* New Major License.

b. *Project No.:* 5867–054.

c. *Date filed:* September 29, 2021.

d. *Applicant:* Alice Falls Hydro, LLC.

e. *Name of Project:* Alice Falls Hydroelectric Project (Alice Falls Project or project).

f. *Location:* On the Ausable River, in the Town of Chesterfield, Clinton and Essex Counties, New York. The project does not occupy federal land.

g. *Filed Pursuant to:* Federal Power Act, 16 U.S.C. 791(a)–825(r).

h. *Applicant Contact:* Jody Smet, Vice President, Regulatory Affairs, Eagle Creek Renewable Energy, LLC, 7315 Wisconsin Avenue, Suite 1100W, Bethesda, Maryland, 20814; (804) 739–0654 or *jody.smet@eaglecreekre.com.*

i. *FERC Contact:* Chris Millard at (202) 502–8256, or email at *christopher.millard@ferc.gov.*

j. Deadline for filing motions to intervene and protests: 60 days from the issuance date of this notice.

The Commission strongly encourages electronic filing. Please file motions to intervene and protests using the Commission's eFiling system at *http://www.ferc.gov/docs-filing/efiling.asp.* For assistance, please contact FERC Online Support at *FERCOnlineSupport@ferc.gov,* (866) 208–3676 (toll free), or (202) 502–8659 (TTY). In lieu of electronic filing, you may submit a paper copy. Submissions sent via the U.S. Postal Service must be addressed to: Kimberly D. Bose, Secretary, Federal Energy Regulatory Commission, 888 First Street NE, Room 1A, Washington, DC 20426. Submissions sent via any other carrier must be addressed to: Kimberly D. Bose, Secretary, Federal Energy Regulatory Commission, 12225 Wilkins Avenue, Rockville, Maryland 20852. All filings must clearly identify the project name and docket number on the first page: Alice Falls Hydroelectric Project (P–5867–054).

The Commission's Rules of Practice require all intervenors filing documents with the Commission to serve a copy of that document on each person on the official service list for the project. Further, if an intervenor files comments or documents with the Commission relating to the merits of an issue that may affect the responsibilities of a particular resource agency, they must also serve a copy of the document on that resource agency.

k. This application has been accepted but is not ready for environmental analysis.

l. The project consists of the following existing facilities: (1) A stone masonry dam, 88 feet long and 63 feet high; (2) a 110-foot-long rock ledge spillway section adjacent to the dam with 2.5-foot-high, 85-foot-long pipe-supported flashboards; (3) a reservoir with a surface area of 4.8 acres with a normal water surface elevation of 350 feet National Geodetic Vertical Datum of 1929; (4) an intake structure; (5) a divided, 45-foot-long, reinforced concrete penstock; (6) a powerhouse containing two turbine-generator units of 1.5 megawatts (MW) and 0.6 MW; (7) a substation; (8) a 745-foot-long, 5-kilovolt (kV) buried generator lead from the powerhouse to the substation and a 700-foot-long, 46-kV buried transmission line from the substation to the interconnection with the grid; and (9) appurtenant facilities.

The Alice Falls Project is operated in a run-of-river mode with an average annual generation of 4,021 megawatt-hours.

Alice Falls Hydro, LLC proposes to continue to operate the project in a run-of-river mode with modifications to the flow and operating schedule of the existing fish bypass facility and modifications to aesthetic flows over Alice Falls.

m. In addition to publishing the full text of this document in the **Federal Register**, the Commission provides all interested individuals an opportunity to view and/or print the contents of this document via the internet through the Commission's Home Page (*www.ferc.gov*) using the ''eLibrary'' link. At this time, the Commission has suspended access to the Commission's Public Access Room due to the proclamation declaring a National Emergency concerning the Novel Coronavirus Disease (COVID–19), issued by the President on March 13, 2020. For assistance, contact FERC at *FERCOnlineSupport@ferc.gov* or call toll-free, (886) 208–3676 or TTY, (202) 502–8659.

You may also register online at *http://www.ferc.gov/docs-filing/esubscription.asp* to be notified via email of new filings and issuances related to this or other pending projects. For assistance, contact FERC Online Support.

n. Anyone may submit a protest or a motion to intervene in accordance with the requirements of Rules of Practice and Procedure, 18 CFR 385.210, 385.211, and 385.214. In determining the appropriate action to take, the Commission will consider all protests filed, but only those who file a motion to intervene in accordance with the Commission's Rules may become a party to the proceeding. Any protests or motions to intervene must be received on or before the specified deadline date for the particular application.

All filings must (1) bear in all capital letters the title ''PROTEST'' or ''MOTION TO INTERVENE;'' (2) set forth in the heading the name of the applicant and the project number of the application to which the filing responds; (3) furnish the name, address, and telephone number of the person protesting or intervening; and (4) otherwise comply with the requirements of 18 CFR 385.2001 through 385.2005. Agencies may obtain copies of the application directly from the applicant. A copy of any protest or motion to intervene must be served upon each representative of the applicant specified in the particular application.

o. Procedural schedule: The application will be processed according to the following schedule. Revisions to the schedule will be made as appropriate.

Issue Scoping Document 1 for comments—April 2022
Request Additional Information (if necessary)—June 2022
Issue Scoping Document 2 (if necessary)—July 2022
Issue Notice of Ready for Environmental Analysis—July 2022

Dated: February 9, 2022.

Kimberly D. Bose,

Secretary.

[FR Doc. 2022–03215 Filed 2–14–22; 8:45 am]

BILLING CODE 6717–01–P

DEPARTMENT OF ENERGY

Federal Energy Regulatory Commission

[Docket No. CP19–501–000]

Texas Eastern Transmission, LP; Notice of Request for Extension of Time

Take notice that on February 7, 2022, Texas Eastern Transmission, LP. (Texas Eastern), requested that the Federal Energy Regulatory Commission (Commission) grant an extension of time, until March 24, 2023, to complete construction of the Bailey East Mine Panel 11J Project (Project) and make the Project available for service, as authorized in the March 24, 2020 Order Issuing Certificates (Certificate Order).[1]

Texas Eastern was granted authorization to excavate, elevate, and replace certain segments of four different natural gas transmission pipelines and appurtenant facilities, and to monitor potential strains on the pipeline sections due to anticipated longwall mining activities planned by CONSOL Energy, Inc. (CONSOL) in Marshall County, West Virginia. The Certificate Order required Texas Eastern to complete construction of the Project facilities and make them available for service by March 24, 2022.[2] Texas Eastern has completed the reinstallation of Lines 15 and 30 below ground and placed those lines back into service in December 2021. Due to delays in the reinstallation and hydrostatic testing of Lines 10 and 25, Texas Eastern now request an additional year, until March 24, 2023, to complete construction of the Project and place it into service.

This notice establishes a 15-calendar day intervention and comment period deadline. Any person wishing to comment on Texas Eastern's request for an extension of time may do so. No reply comments or answers will be considered. If you wish to obtain legal status by becoming a party to the proceedings for this request, you should, on or before the comment date stated below, file a motion to intervene in accordance with the requirements of the Commission's Rules of Practice and Procedure (18 CFR 385.214 or 385.211) and the Regulations under the Natural Gas Act (18 CFR 157.10).

As a matter of practice, the Commission itself generally acts on requests for extensions of time to complete construction for Natural Gas Act facilities when such requests are contested before order issuance. For those extension requests that are contested,[3] the Commission will aim to issue an order acting on the request within 45 days.[4] The Commission will address all arguments relating to whether the applicant has demonstrated there is good cause to grant the extension.[5] The Commission will not consider arguments that re-litigate the issuance of the certificate order, including whether the Commission properly found the project to be in the public convenience and necessity and whether the Commission's environmental analysis for the certificate complied with the National Environmental Policy Act.[6] At the time a pipeline requests an extension of time, orders on certificates of public convenience and necessity are final and the Commission will not re-litigate their issuance.[7] The OEP Director, or his or her designee, will act on all of those extension requests that are uncontested.

In addition to publishing the full text of this document in the **Federal Register**, the Commission provides all interested persons an opportunity to view and/or print the contents of this document via the internet through the Commission's Home Page (*http://www.ferc.gov*) using the ''eLibrary'' link. Enter the docket number excluding the last three digits in the docket number field to access the document. At this time, the Commission has suspended access to Commission's Public Reference Room, due to the proclamation declaring a National Emergency concerning the Novel Coronavirus Disease (COVID–19), issued by the President on March 13, 2020. For assistance, contact FERC at *FERCOnlineSupport@ferc.gov* or call toll-free, (886) 208–3676 or TYY, (202) 502–8659.

The Commission strongly encourages electronic filings of comments, protests and interventions in lieu of paper using the ''eFile'' link at *http://www.ferc.gov.* Persons unable to file electronically may mail similar pleadings to the Federal Energy Regulatory Commission, 888 First Street NE, Washington, DC 20426.

Hand delivered submissions in docketed proceedings should be delivered to Health and Human Services, 12225 Wilkins Avenue, Rockville, Maryland 20852.

Comment Date: 5:00 p.m. Eastern Time on February 24, 2022.

Dated: February 9, 2022.

Kimberly D. Bose,

Secretary.

[FR Doc. 2022–03217 Filed 2–14–22; 8:45 am]

BILLING CODE 6717–01–P

[1] *Texas Eastern Transmission, LP,* 170 FERC ¶ 62,167 (2020)(Certificate Order).

[2] Certificate Order, 170 FERC ¶ 62,167 at ordering para. (D).

[3] Contested proceedings are those where an intervenor disputes any material issue of the filing. 18 CFR 385.2201(c)(1) (2019).

[4] *Algonquin Gas Transmission, LLC,* 170 FERC ¶ 61,144, at P 40 (2020).

[5] *Id.* at P 40.

[6] Similarly, the Commission will not re-litigate the issuance of an NGA section 3 authorization, including whether a proposed project is not inconsistent with the public interest and whether the Commission's environmental analysis for the permit order complied with NEPA.

[7] *Algonquin Gas Transmission, LLC,* 170 FERC ¶ 61,144, at P 40 (2020).

DEPARTMENT OF ENERGY

Federal Energy Regulatory Commission

[Project Nos. 2601–068; 2603–050]

Northbrook Carolina Hydro II, LLC; HydroLand Carolinas I, LLC; Notice of Effectiveness of Withdrawal of Applications To Transfer Licenses

On May 13, 2021, Northbrook Carolina Hydro II, LLC (Northbrook) and HydroLand Carolinas I, LLC (Hydroland) jointly filed applications to transfer the licenses for the Bryson

Hydroelectric Project No. 2601 and Franklin Hydroelectric Project No. 2603. On January 21, 2022, Northbrook and HydroLand jointly filed a notice of withdrawal of their applications to transfer the licenses for the Bryson Hydroelectric Project No. 2601 and Franklin Hydroelectric Project No. 2603. The projects are located on the Oconaluftee and Little Tennessee rivers in Swain and Macon counties, North Carolina.

No motion in opposition to the notice of the withdrawal has been filed, and the Commission has taken no action to disallow the withdrawal. Pursuant to Rule 216(b) of the Commission's Rules of Practice and Procedure,[1] the withdrawal of the transfer of licenses became effective on February 5, 2022, and these proceedings are hereby terminated.

Dated: February 9, 2022.

Kimberly D. Bose,

Secretary.

[FR Doc. 2022–03218 Filed 2–14–22; 8:45 am]

BILLING CODE 6717–01–P

[1] 18 CFR 385.216(b) (2021).

DEPARTMENT OF ENERGY

Federal Energy Regulatory Commission

[Docket No. CP22–21–000; Docket No. CP22–22–000]

Venture Global CP2 LNG, LLC; Venture Global CP Express, LLC; Notice of Intent To Prepare an Environmental Impact Statement for the Proposed CP2 LNG and CP Express Project, Request for Comments on Environmental Issues, and Schedule for Environmental Review

The staff of the Federal Energy Regulatory Commission (FERC or Commission) will prepare an environmental impact statement (EIS) that will discuss the environmental impacts of the CP2 LNG and CP Express Project (Project) involving construction and operation of facilities by Venture Global CP2 LNG, LLC (CP2 LNG) and Venture Global CP Express, LLC (CP Express) in Jasper and Newton Counties, Texas and Calcasieu and Cameron Parishes, Louisiana. The Commission will use this EIS in its decision-making process to determine whether the Project is in the public interest. The schedule for preparation of the EIS is discussed in the *Schedule for Environmental Review* section of this notice.

As part of the National Environmental Policy Act (NEPA) review process, the Commission takes into account concerns the public may have about proposals and the environmental impacts that could result whenever it considers the issuance of an authorization. This gathering of public input is referred to as ''scoping.'' By notice issued on April 27, 2021 in Docket No. PF21–1–000, the Commission opened a scoping period during CP2 LNG and CP Express' planning process for the Project and prior to filing a formal application with the Commission, a process referred to as ''pre-filing.'' CP2 LNG and CP Express have now filed an application with the Commission, and staff intends to prepare an EIS that will address the concerns raised during the pre-filing scoping process and comments received in response to this notice.

By this notice, the Commission requests public comments on the scope of issues to address in the environmental document, including comments on potential alternatives and impacts, and any relevant information, studies, or analyses of any kind concerning impacts affecting the quality of the human environment. To ensure that your comments are timely and properly recorded, please submit your comments so that the Commission receives them in Washington, DC on or before 5:00 p.m. Eastern Time on March 11, 2022. Further details on how to submit comments are provided in the *Public Participation* section of this notice.

As mentioned above, during the pre-filing process, the Commission opened a scoping period which expired on May 27, 2021; however, Commission staff continued to accept comments during the entire pre-filing process. Staff also held three virtual scoping sessions to take oral scoping comments. All substantive written and oral comments provided during pre-filing will be addressed in the EIS. Therefore, if you submitted comments on this Project to the Commission during the pre-filing process in Docket No. PF21–1–000, you do not need to file those comments again.

If you are a landowner receiving this notice, a pipeline company representative may contact you about the acquisition of an easement to construct, operate, and maintain the proposed pipeline facilities. The company would seek to negotiate a mutually acceptable easement agreement. You are not required to enter into an agreement. However, if the Commission approves the Project, the Natural Gas Act conveys the right of eminent domain to the company. Therefore, if you and the company do not reach an easement agreement, the pipeline company could initiate condemnation proceedings in court. In such instances, compensation would be determined by a judge in accordance with state law. The Commission does not grant, exercise, or oversee the exercise of eminent domain authority. The courts have exclusive authority to handle eminent domain cases; the Commission has no jurisdiction over these matters.

CP2 LNG and CP Express provided landowners with a fact sheet prepared by the FERC entitled ''An Interstate Natural Gas Facility On My Land? What Do I Need To Know?'' which addresses typically asked questions, including the use of eminent domain and how to participate in the Commission's proceedings. This fact sheet along with other landowner topics of interest are available for viewing on the FERC website (*www.ferc.gov*) under the Natural Gas Questions or Landowner Topics link.

Public Participation

There are three methods you can use to submit your comments to the Commission. The Commission encourages electronic filing of comments and has staff available to assist you at (866) 208–3676 or *FercOnlineSupport@ferc.gov.* Please carefully follow these instructions so that your comments are properly recorded.

(1) You can file your comments electronically using the *eComment* feature, which is located on the Commission's website (*www.ferc.gov*) under the link to FERC Online. Using eComment is an easy method for submitting brief, text-only comments on a project;

(2) You can file your comments electronically by using the *eFiling* feature, which is also located on the Commission's website (*www.ferc.gov*) under the link to FERC Online. With eFiling, you can provide comments in a variety of formats by attaching them as a file with your submission. New eFiling users must first create an account by clicking on ''*eRegister.*'' You will be asked to select the type of filing you are making; a comment on a particular project is considered a ''Comment on a Filing''; or

(3) You can file a paper copy of your comments by mailing them to the Commission. Be sure to reference the project docket number (CP22–21–000 and CP22–22–000) on your letter. Submissions sent via the U.S. Postal Service must be addressed to: Kimberly D. Bose, Secretary, Federal Energy Regulatory Commission, 888 First Street

NE, Room 1A, Washington, DC 20426. Submissions sent via any other carrier must be addressed to: Kimberly D. Bose, Secretary, Federal Energy Regulatory Commission, 12225 Wilkins Avenue, Rockville, Maryland 20852.

Additionally, the Commission offers a free service called eSubscription. This service provides automatic notification of filings made to subscribed dockets, document summaries, and direct links to the documents. Go to *https://www.ferc.gov/ferc-online/overview* to register for eSubscription.

Summary of the Proposed Project, the Project Purpose and Need, and Expected Impacts

CP2 LNG plans to construct and operate a new 20 million tonnes per annum liquefied natural gas (LNG) export terminal in Cameron Parish, Louisiana. The liquefaction and storage facilities would be on the mainland, while the ship loading and associated facilities would be constructed on Monkey Island between Calcasieu Pass and the Calcasieu Ship Channel (collectively referred to as the LNG terminal).

CP Express would construct and operate approximately 85 miles of new 48-inch-diameter natural gas pipeline originating in Jasper County, Texas and terminating at the proposed LNG terminal. In addition, a 6-mile-long, 24-inch-diameter lateral pipeline and 187,000-horsepower (hp) Moss Lake Compressor Station would be constructed in Calcasieu Parish, Louisiana. The pipeline facilities would be capable of transporting 4 billion cubic feet of natural gas per day to the LNG terminal.

CP2 LNG and CP Express would construct the Project in two phases; Phase 1 would consist of construction of the pipelines, 69,600-hp compression at the Moss Lake Compressor Station, the LNG terminal marine loading berths, and about half of the LNG terminal facilities. Phase 2 would consist of the remaining 117,400-hp compression at the compressor station and the remaining LNG terminal facilities.

According to CP2 LNG, its Project would transport domestically produced natural gas for liquefaction, storage, and export to overseas markets. According to CP Express, its Project would create the firm transportation capacity needed to transport the quantity of feed gas required for the proposed LNG export operations from supply points to the LNG terminal facilities.

The Project would consist of the following facilities:

- A liquefaction plant consisting of 18 liquefaction blocks and support facilities, each with a nameplate capacity of 1.1 million tonnes per annum;
- six pretreatment systems;
- four 200,000 cubic meter full containment LNG storage tanks;
- carbon capture and sequestration facilities;
- a combined-cycle natural gas turbine power plant capable of generating 1,440 megawatts;
- two LNG loading docks;
- two marine berths capable of receiving ocean-going LNG carriers;
- two 42-inch outside diameter cryogenic LNG transfer lines, one boil-off-gas pipeline, and one utility line connecting the marine facilities on Monkey Island to the mainland LNG terminal site;
- one 85.4-mile-long, 48-inch-diameter natural gas pipeline;
- one 6.0-mile-long, 24-inch-diameter natural gas lateral pipeline;
- one new 187,000-hp compressor station near Moss Lake, Louisiana;
- five meter stations at interconnects with existing pipelines;
- a gas gate station within the LNG terminal site; and
- other appurtenant facilities.

The general location of the Project facilities is shown in appendix 1.[1]

Based on the environmental information provided by CP2 LNG and CP Express, construction of the proposed facilities would disturb about 737.3 acres for the LNG terminal and 1,724.3 acres of land for the pipeline and associated aboveground facilities. Following construction, CP2 LNG and CP Express would maintain about 645.4 acres for operation of the LNG terminal and 606.6 acres for operation of the pipeline and associated aboveground facilities. CP2 LNG and CP Express would restore the remaining acreage to former uses. About 44 percent of the proposed pipeline route parallels existing pipeline, utility, or road rights-of-way.

Based on an initial review of CP2 LNG and CP Express' proposal and public comments received during the pre-filing process, Commission staff have identified several expected impacts that deserve attention in the EIS. Construction and operation of the LNG terminal and marine facilities would result in impacts on waterbodies and wetlands due to crossings, permanent fill, and dredging, as well as impacts on visual resources, noise and air quality. The Project pipeline and associated aboveground facilities would result in impacts on waterbodies, wetlands, cropland, and forested land, as well as noise and air quality. In addition to these Project impacts, landowners along the route may also be affected by construction and operation of other proposed residential, road improvement, and utility projects. We have identified five environmental justice communities that could be affected by the Project. Individuals within these communities have been included on the Commission's environmental mailing list for the Project, as further explained in the *Environmental Mailing List* section of this notice.

The NEPA Process and the EIS

The EIS issued by the Commission will discuss impacts that could occur as a result of the construction and operation of the proposed Project under the relevant general resource areas:

- Geology and soils;
- water resources and wetlands;
- vegetation and wildlife;
- threatened and endangered species;
- cultural resources;
- land use;
- socioeconomics and environmental justice populations;
- air quality and noise; and
- reliability and safety.

Commission staff will also make recommendations on how to lessen or avoid impacts on the various resource areas. Your comments will help Commission staff focus its analysis on the issues that may have a significant effect on the human environment.

The EIS will present Commission staff's independent analysis of the issues. The U.S. Department of Energy, U.S. Department of Transportation, U.S. Coast Guard, U.S. Army Corps of Engineers, and National Marine Fisheries Service are cooperating agencies in the preparation of the EIS.[2] Staff will prepare a draft EIS which will be issued for public comment. Commission staff will consider all timely comments received during the comment period on the draft EIS and revise the document, as necessary,

[1] The appendices referenced in this notice will not appear in the **Federal Register**. Copies of the appendices were sent to all those receiving this notice in the mail and are available at *www.ferc.gov* using the link called ''eLibrary''. For instructions on connecting to eLibrary, refer to the last page of this notice. At this time, the Commission has suspended access to the Commission's Public Reference Room due to the proclamation declaring a National Emergency concerning the Novel Coronavirus Disease (COVID–19), issued by the President on March 13, 2020. For assistance, contact FERC at *FERCOnlineSupport@ferc.gov* or call toll free, (886) 208–3676 or TTY (202) 502–8659.

[2] The Council on Environmental Quality regulations addressing cooperating agency responsibilities are at Title 40 Code of Federal Regulations (CFR), Section 1501.8. (2021).

before issuing a final EIS. Any draft and final EIS will be available in electronic format in the public record through eLibrary [3] and the Commission's natural gas environmental documents web page (*https://www.ferc.gov/industries-data/natural-gas/environment/environmental-documents*). If eSubscribed, you will receive instant email notification when the environmental document is issued.

Alternatives Under Consideration

The EIS will evaluate reasonable alternatives that are technically and economically feasible and meet the purpose and need for the proposed action.[4] Alternatives currently under consideration include:

- The no-action alternative, meaning the Project is not implemented;
- LNG terminal site alternatives;
- pipeline system alternatives;
- pipeline route alternatives; and
- compressor station aboveground facility site alternatives.

With this notice, the Commission requests specific comments regarding any additional potential alternatives to the proposed action or segments of the proposed action. Please focus your comments on reasonable alternatives (including alternative facility sites and pipeline routes) that meet the Project objectives, are technically and economically feasible, and avoid or lessen environmental impact.

Consultation Under Section 106 of the National Historic Preservation Act

In accordance with the Advisory Council on Historic Preservation's implementing regulations for section 106 of the National Historic Preservation Act, the Commission initiated section 106 consultation for the Project in the notice issued on April 27, 2021, with the applicable State Historic Preservation Office, and other government agencies, interested Indian tribes, and the public to solicit their views and concerns regarding the Project's potential effects on historic properties.[5] This notice is a continuation of section 106 consultation for the Project. The Project EIS will document findings on the impacts on historic properties and summarize the status of consultations under section 106.

Schedule for Environmental Review

On December 16, 2021, the Commission issued its Notice of Application for the Project. Among other things, that notice alerted other agencies issuing federal authorizations of the requirement to complete all necessary reviews and to reach a final decision on the request for a federal authorization within 90 days of the date of issuance of the Commission staff's final EIS for the Project. This notice identifies the Commission staff's planned schedule for completion of the final EIS for the Project, which is based on an issuance of the draft EIS in July 2022.

Issuance of Notice of Availability of the final EIS—February 10, 2023

90-day Federal Authorization Decision Deadline [6]—May 11, 2023

If a schedule change becomes necessary for the final EIS, an additional notice will be provided so that the relevant agencies are kept informed of the Project's progress.

Permits and Authorizations

The table below lists the anticipated permits and authorizations for the Project required under federal law. This list may not be all-inclusive and does not preclude any permit or authorization if it is not listed here. Agencies with jurisdiction by law and/or special expertise may formally cooperate in the preparation of the Commission's EIS and may adopt the EIS to satisfy its NEPA responsibilities related to this Project. Agencies that would like to request cooperating agency status should follow the instructions for filing comments provided under the *Public Participation* section of this notice.

Agency	Permit
FERC	Section 3 of the Natural Gas Act.
	Section 7 of the Natural Gas Act.
U.S. Department of Energy	Authorization to export LNG by vessel to Free Trade Agreement (FTA) and non-FTA nations.
U.S. Army Corps of Engineers	Section 404 of the Clean Water Act.
	Section 10 of the Rivers and Harbors Act.
U.S. Fish and Wildlife Service	Section 7 of the Endangered Species Act Consultation.
National Marine Fisheries Service	Section 7 of the Endangered Species Act Consultation.
	Magnuson-Stevens Fishery Conservation Management Act Consultation.
	Marine Mammal Protection Act Consultation.
Louisiana Department of Environmental Quality	Title V and Prevention of Significant Deterioration of the Clean Air Act.
	Section 401 Water Quality Certification.
Railroad Commission of Texas	Section 401 Water Quality Certification.
Louisiana Department of Natural Resources	Coastal Use Permit.
Louisiana Department of Culture, Recreation, and Tourism	Section 106 of the National Historic Preservation Act.
Texas Historical Commission	Section 106 of the National Historic Preservation Act.
Federal Aviation Administration	Notice of Proposed Construction or Alteration of Navigable Airspace.

Environmental Mailing List

This notice is being sent to the Commission's current environmental mailing list for the Project which includes federal, state, and local government representatives and agencies; elected officials; environmental and public interest groups; Native American Tribes; other interested parties; and local libraries and newspapers. This list also includes all affected landowners (as defined in

[3] For instructions on connecting to eLibrary, refer to the last page of this notice.

[4] 40 CFR 1508.1(z).

[5] The Advisory Council on Historic Preservation's regulations are at Title 36, Code of Federal Regulations, Part 800. Those regulations define historic properties as any prehistoric or historic district, site, building, structure, or object included in or eligible for inclusion in the National Register of Historic Places.

[6] The Commission's deadline applies to the decisions of other federal agencies, and state agencies acting under federally delegated authority, that are responsible for federal authorizations, permits, and other approvals necessary for proposed projects under the Natural Gas Act. Per 18 CFR 157.22(a), the Commission's deadline for other agency's decisions applies unless a schedule is otherwise established by federal law.

the Commission's regulations) who are potential right-of-way grantors, whose property may be used temporarily for Project purposes, or who own homes within certain distances of aboveground facilities, and anyone who submits comments on the Project and includes a mailing address with their comments. Commission staff will update the environmental mailing list as the analysis proceeds to ensure that Commission notices related to this environmental review are sent to all individuals, organizations, and government entities interested in and/or potentially affected by the proposed Project. State and local government representatives should notify their constituents of this proposed project and encourage them to comment on their areas of concern.

If you need to make changes to your name/address, or if you would like to remove your name from the mailing list, please complete one of the following steps:

(1) Send an email to *GasProjectAddressChange@ferc.gov* stating your request. You must include the docket number CP22–21–000 and CP22–22–000 in your request. If you are requesting a change to your address, please be sure to include your name and the correct address. If you are requesting to delete your address from the mailing list, please include your name and address as it appeared on this notice. This email address is unable to accept comments.

OR

(2) Return the attached ''Mailing List Update Form'' (appendix 2).

Additional Information

Additional information about the Project is available from the Commission's Office of External Affairs, at (866) 208–FERC, or on the FERC website at *www.ferc.gov* using the eLibrary link. Click on the eLibrary link, click on ''General Search'' and enter the docket number in the ''Docket Number'' field, excluding the last three digits (*i.e.,* CP22–21 and CP22–22). Be sure you have selected an appropriate date range. For assistance, please contact FERC Online Support at *FercOnlineSupport@ferc.gov* or (866) 208–3676, or for TTY, contact (202) 502–8659. The eLibrary link also provides access to the texts of all formal documents issued by the Commission, such as orders, notices, and rulemakings.

Public sessions or site visits will be posted on the Commission's calendar located at *https://www.ferc.gov/news-events/events* along with other related information.

Dated: February 9, 2022.

Kimberly D. Bose,

Secretary.

[FR Doc. 2022–03214 Filed 2–14–22; 8:45 am]

BILLING CODE 6717–01–P

ENVIRONMENTAL PROTECTION AGENCY

[FRL–9448–01–OAR]

Inventory of U.S. Greenhouse Gas Emissions and Sinks: 1990–2020

AGENCY: Environmental Protection Agency (EPA).

ACTION: Notice of document availability and request for comments.

SUMMARY: The Draft Inventory of U.S. Greenhouse Gas Emissions and Sinks: 1990–2020 is available for public review. EPA requests recommendations for improving the overall quality of the inventory report to be finalized in April 2022, as well as subsequent inventory reports.

DATES: To ensure your comments are considered for the final version of the document, please submit your comments by March 11, 2022. However, comments received after that date will still be welcomed and considered for the next edition of this report.

ADDRESSES: Submit your comments, identified by Docket ID No. EPA–HQ–OAR–2022–0001, to the Federal eRulemaking Portal: *https://www.regulations.gov.* Follow the online instructions for submitting comments. Once submitted, comments cannot be edited or withdrawn. Do not submit electronically any information you consider to be Confidential Business Information (CBI). Comments can also be submitted in hardcopy to GHG Inventory at: Environmental Protection Agency, Climate Change Division (6207A), 1200 Pennsylvania Ave. NW, Washington, DC 20460, Fax: (202) 343–2342. You are welcome and encouraged to send an email with your comments to *GHGInventory@epa.gov.* EPA may publish any comment received to its public docket, submitted in hardcopy or sent via email. For additional submission methods, the full EPA public comment policy, information about CBI, and general guidance on making effective comments, please visit *http://www2.epa.gov/dockets/commenting-epa-dockets.*

FOR FURTHER INFORMATION CONTACT: Ms. Mausami Desai, Environmental Protection Agency, Office of Air and Radiation, Office of Atmospheric Programs, Climate Change Division, (202) 343–9381, *GHGInventory@epa.gov.*

SUPPLEMENTARY INFORMATION: Annual U.S. emissions for the period of time from 1990 through 2020 are summarized and presented by sector, including source and sink categories. The inventory contains estimates of carbon dioxide (CO_2), methane (CH_4), nitrous oxide (N_2O), hydrofluorocarbons (HFC), perfluorocarbons (PFC), sulfur hexafluoride (SF_6), and nitrogen trifluoride (NF_3) emissions. The technical approach used in this report to estimate emissions and sinks for greenhouse gases is consistent with the methodologies recommended by the Intergovernmental Panel on Climate Change (IPCC), and reported in a format consistent with the United Nations Framework Convention on Climate Change (UNFCCC) reporting guidelines. The Inventory of U.S. Greenhouse Gas Emissions and Sinks: 1990–2020 is the latest in a series of annual, policy-neutral U.S. submissions to the Secretariat of the UNFCCC. EPA requests recommendations for improving the overall quality of the inventory report to be finalized in April 2022, as well as subsequent inventory reports. The draft report is available at *https://www.epa.gov/ghgemissions/inventory-us-greenhouse-gas-emissions-and-sinks.*

Hans Christopher Grundler,

Director, Office of Atmospheric Programs.

[FR Doc. 2022–02694 Filed 2–14–22; 8:45 am]

BILLING CODE 6560–50–P

FEDERAL COMMUNICATIONS COMMISSION

[OMB 3060–XXXX; FR ID 71307]

Information Collection Being Submitted for Review and Approval to Office of Management and Budget

AGENCY: Federal Communications Commission.

ACTION: Notice and request for comments.

SUMMARY: As part of its continuing effort to reduce paperwork burdens, as required by the Paperwork Reduction Act (PRA) of 1995, the Federal Communications Commission (FCC or the Commission) invites the general public and other Federal Agencies to take this opportunity to comment on the following information collection. Pursuant to the Small Business Paperwork Relief Act of 2002, the FCC seeks specific comment on how it might ''further reduce the information

collection burden for small business concerns with fewer than 25 employees.'' The Commission may not conduct or sponsor a collection of information unless it displays a currently valid Office of Management and Budget (OMB) control number. No person shall be subject to any penalty for failing to comply with a collection of information subject to the PRA that does not display a valid OMB control number.

DATES: Written comments and recommendations for the proposed information collection should be submitted on or before March 17, 2022.

ADDRESSES: Comments should be sent to *www.reginfo.gov/public/do/PRAMain.* Find this particular information collection by selecting ''Currently under 30-day Review—Open for Public Comments'' or by using the search function. Your comment must be submitted into *www.reginfo.gov* per the above instructions for it to be considered. In addition to submitting in *www.reginfo.gov* also send a copy of your comment on the proposed information collection to Nicole Ongele, FCC, via email to *PRA@fcc.gov* and to *Nicole.Ongele@fcc.gov.* Include in the comments the OMB control number as shown in the **SUPPLEMENTARY INFORMATION** below.

FOR FURTHER INFORMATION CONTACT: For additional information or copies of the information collection, contact Nicole Ongele at (202) 418–2991. To view a copy of this information collection request (ICR) submitted to OMB: (1) Go to the web page *http://www.reginfo.gov/public/do/PRAMain,* (2) look for the section of the web page called ''Currently Under Review,'' (3) click on the downward-pointing arrow in the ''Select Agency'' box below the ''Currently Under Review'' heading, (4) select ''Federal Communications Commission'' from the list of agencies presented in the ''Select Agency'' box, (5) click the ''Submit'' button to the right of the ''Select Agency'' box, (6) when the list of FCC ICRs currently under review appears, look for the Title of this ICR and then click on the ICR Reference Number. A copy of the FCC submission to OMB will be displayed.

SUPPLEMENTARY INFORMATION: As part of its continuing effort to reduce paperwork burdens, as required by the Paperwork Reduction Act (PRA) of 1995 (44 U.S.C. 3501–3520), the FCC invited the general public and other Federal Agencies to take this opportunity to comment on the following information collection. Comments are requested concerning: (a) Whether the proposed collection of information is necessary for the proper performance of the functions of the Commission, including whether the information shall have practical utility; (b) the accuracy of the Commission's burden estimates; (c) ways to enhance the quality, utility, and clarity of the information collected; and (d) ways to minimize the burden of the collection of information on the respondents, including the use of automated collection techniques or other forms of information technology. Pursuant to the Small Business Paperwork Relief Act of 2002, Public Law 107–198, see 44 U.S.C. 3506(c)(4), the FCC seeks specific comment on how it might ''further reduce the information collection burden for small business concerns with fewer than 25 employees.''

OMB Control Number: 3060–XXXX.

Title: Preparation of Annual Reports to Congress for the Collection & Use of Fees for 988 Services by States & Other Jurisdictions Under the National Suicide Hotline Designation Act of 2020.

Form Number: N/A.

Type of Review: New information collection.

Respondents: State, Local, or Tribal governments.

Number of Respondents and Responses: 630 respondents; 630 responses.

Estimated Time per Response: 55 hours.

Frequency of Response: Annual reporting requirement.

Obligation to Respond: Voluntary. Statutory authority for this information collection is contained in National Suicide Hotline Designation Act of 2020, Public Law 116–172, 134 Stat. 832 (2020) (988 Act).

Total Annual Burden: 34,650 hours.

Total Annual Cost: No Cost.

Privacy Act Impact Assessment: No impact(s).

Nature and Extent of Confidentiality: The Commission will consider the potential confidentiality of any information submitted, particularly where public release of such information could raise security concerns (*e.g.,* granular location information). Respondents may request materials or information submitted to the Commission or to the Administrator be withheld from public inspection under 47 CFR 0.459 of the Commission's rules.

Needs and Uses: This information collection enables the Federal Communications Commission (Commission) to fulfill its continuing obligations under the National Suicide Hotline Designation Act of 2020, Public Law 116–172, 134 Stat. 832 (2020) (988 Act), to submit an annual ''Fee Accountability Report'' to the Committees on Commerce, Science, and Transportation and Appropriations of the Senate, and the Committees on Energy and Commerce and Appropriations of the House of Representatives, detailing ''the status in each State, political subdivision of a State, Indian Tribe, or village or regional corporation serving'' an Alaska Native Claims Settlement Act region, of the collection and distribution of fees or charges for ''the support or implementation of 9–8–8 services,'' including ''findings on the amount of revenues obligated or expended by each [state, political entity, and subdivision] for any purpose other than the purpose for which any such fees or charges are specified.'' (988 Act, 134 Stat. at 833–34.)

The Commission will collect information for the preparation of the annual Fee Accountability Report through a survey, to be distributed via electronic mail, that appropriate officials of States and political subdivisions thereof, Indian Tribes, and village or regional corporations serving a region established pursuant to the Alaska Native Claims Settlement Act, as amended (43 U.S.C. 1601 *et seq.*) can use to submit data pertaining to the collection and distribution of revenues from fees and charges for the support or implementation of 988 services, including the use of such collected fees and charges for any purpose other than for the support or implementation of 988 services. In addition, consistent with the definition of ''State'' set forth in 47 U.S.C. 153(40) of the Communications Act, the Commission will collect this information from states as well as the District of Columbia and the inhabited U.S. Territories and possessions.

Federal Communications Commission.

Marlene Dortch,

Secretary, Office of the Secretary.

[FR Doc. 2022–03154 Filed 2–14–22; 8:45 am]

BILLING CODE 6712–01–P

FEDERAL ELECTION COMMISSION

Sunshine Act Meeting

TIME AND DATE: Thursday, February 17, 2022 at 11:00 a.m.

PLACE: 1050 First Street NE, Washington, DC. (This meeting will be a virtual meeting).

STATUS: This meeting will be closed to the public.

MATTERS TO BE CONSIDERED: Audit conducted pursuant to 52 U.S.C. 30111(b).

* * * * *

CONTACT PERSON FOR MORE INFORMATION: Judith Ingram, Press Officer. Telephone: (202) 694–1220.

Authority: Government in the Sunshine Act, 5 U.S.C. 552b.

Laura E. Sinram,

Acting Secretary and Clerk of the Commission.

[FR Doc. 2022–03291 Filed 2–11–22; 11:15 am]

BILLING CODE 6715–01–P

FEDERAL RETIREMENT THRIFT INVESTMENT BOARD

Notice of Board Meeting

DATES: February 23, 2022 at 10:00 a.m.

ADDRESSES: Telephonic. Dial-in (listen only) information: Number: 1–415–527–5035, Code: 2763 825 4435; or via web: *https://tspmeet.webex.com/tspmeet/onstage/g.php?MTID=e668eeb9f8e4ab246455527de529d7a2b.*

FOR FURTHER INFORMATION CONTACT: Kimberly Weaver, Director, Office of External Affairs, (202) 942–1640.

SUPPLEMENTARY INFORMATION:

Board Meeting Agenda

Open Session

1. Approval of the January 24, 2022 Board Meeting Minutes
2. Investment Manager Annual Service Review
3. Monthly Reports
   (a) Participant Activity Report
   (b) Investment Performance
   (c) Legislative Report
4. Investment Policy Review Frequency
5. Quarterly Report
   (d) Metrics
6. Converge Update
7. Agency Recognition

Closed Session

8. Information Covered Under 5 U.S.C. 552b(c)(10)

Authority: 5 U.S.C. 552b (e)(1).

Dated: February 10, 2022.

Dharmesh Vashee,

General Counsel, Federal Retirement Thrift Investment Board.

[FR Doc. 2022–03230 Filed 2–14–22; 8:45 am]

BILLING CODE P

DEPARTMENT OF HEALTH AND HUMAN SERVICES

Food and Drug Administration

[Docket No. FDA–2022–N–0072]

Data Standards; Requirement Begins for Version 3.1.1 of the Clinical Data Interchange Standards Consortium Standard for Exchange of Nonclinical Data Implementation Guide

AGENCY: Food and Drug Administration, HHS.

ACTION: Notice.

SUMMARY: The Food and Drug Administration's (FDA or Agency) Center for Biologics Evaluation and Research and (CBER) and Center for Drug Evaluation and Research (CDER) are announcing the date that support begins for version 3.1.1 of the Clinical Data Interchange Standards Consortium (CDISC) Standard for Exchange of Nonclinical Data Implementation Guide (SENDIG), and the date that this version update is required in certain submissions. The Agency will update the FDA Data Standards Catalog (Catalog) to reflect these changes.

DATES: Support for version 3.1.1 of the CDISC SENDIG begins February 15, 2022. The requirement for electronic submissions to be submitted using version 3.1.1 of the CDISC SENDIG begins March 15, 2023, for new drug applications (NDAs), abbreviated new drug applications (ANDAs), certain biologics license applications (BLAs), and certain investigational new drug applications (INDs).

ADDRESSES: You may submit either electronic or written comments at any time as follows.

Electronic Submissions

Submit electronic comments in the following way:

- *Federal eRulemaking Portal: https://www.regulations.gov.* Follow the instructions for submitting comments. Comments submitted electronically, including attachments, to *https://www.regulations.gov* will be posted to the docket unchanged. Because your comment will be made public, you are solely responsible for ensuring that your comment does not include any confidential information that you or a third party may not wish to be posted, such as medical information, your or anyone else's Social Security number, or confidential business information, such as a manufacturing process. Please note that if you include your name, contact information, or other information that identifies you in the body of your comments, that information will be posted on *https://www.regulations.gov.*
- If you want to submit a comment with confidential information that you do not wish to be made available to the public, submit the comment as a written/paper submission and in the manner detailed (see ''Written/Paper Submissions'' and ''Instructions'').

Written/Paper Submissions

Submit written/paper submissions as follows:

- *Mail/Hand Delivery/Courier (for written/paper submissions):* Dockets Management Staff (HFA–305), Food and Drug Administration, 5630 Fishers Lane, Rm. 1061, Rockville, MD 20852.
- For written/paper comments submitted to the Dockets Management Staff, FDA will post your comment, as well as any attachments, except for information submitted, marked and identified, as confidential, if submitted as detailed in ''Instructions.''

Instructions: All submissions received must include the Docket No. FDA–2022–N–0072 for ''Data Standards; Requirement Begins for Version 3.1.1 of the Clinical Data Interchange Standards Consortium Standard for Exchange of Nonclinical Data Implementation Guide.'' Received comments will be placed in the docket and, except for those submitted as ''Confidential Submissions,'' publicly viewable at *https://www.regulations.gov* or at the Dockets Management Staff between 9 a.m. and 4 p.m., Monday through Friday, 240–402–7500.

- Confidential Submissions—To submit a comment with confidential information that you do not wish to be made publicly available, submit your comments only as a written/paper submission. You should submit two copies total. One copy will include the information you claim to be confidential with a heading or cover note that states ''THIS DOCUMENT CONTAINS CONFIDENTIAL INFORMATION.'' The Agency will review this copy, including the claimed confidential information, in its consideration of comments. The second copy, which will have the claimed confidential information redacted/blacked out, will be available for public viewing and posted on *https://www.regulations.gov.* Submit both copies to the Dockets Management Staff. If you do not wish your name and contact information to be made publicly available, you can provide this information on the cover sheet and not in the body of your comments and you must identify this information as ''confidential.'' Any information marked as ''confidential'' will not be disclosed except in accordance with 21 CFR 10.20

and other applicable disclosure law. For more information about FDA's posting of comments to public dockets, see 80 FR 56469, September 18, 2015, or access the information at: *https://www.govinfo.gov/content/pkg/FR-2015-09-18/pdf/2015-23389.pdf.*

Docket: For access to the docket to read background documents or the electronic and written/paper comments received, go to *https://www.regulations.gov* and insert the docket number, found in brackets in the heading of this document, into the ''Search'' box and follow the prompts and/or go to the Dockets Management Staff, 5630 Fishers Lane, Rm. 1061, Rockville, MD 20852, 240–402–7500.

FOR FURTHER INFORMATION CONTACT: Helena Sviglin, Center for Drug Evaluation and Research, Food and Drug Administration, 10903 New Hampshire Ave., Bldg. 51, Rm. 1197, Silver Spring, MD 20993–0002, 301–796–5331, *cderdatastandards@fda.hhs.gov,* or Stephen Ripley, Center for Biologics Evaluation and Research, Food and Drug Administration, Bldg. 71, Rm. 7301, Silver Spring, MD 20993–0002, 240–402–7911.

SUPPLEMENTARY INFORMATION: FDA's CBER and CDER are issuing this **Federal Register** notice to announce the date that support begins for version 3.1.1 of the CDISC SENDIG and the date that this version update is required in certain submissions. The FDA guidance for industry ''Providing Regulatory Submissions in Electronic Format—Standardized Study Data'' (June 2021) (eStudy Data guidance), posted on FDA's Study Data Standards Resources web page at *https://www.fda.gov/forindustry/datastandards/studydatastandards/default.htm,* implements the electronic submission requirements of section 745A(a) of the Federal Food, Drug, and Cosmetic Act (21 U.S.C. 379k–1(a)) for study data contained in NDAs, ANDAs, certain BLAs, and certain INDs submitted to CDER or CBER by specifying the format for electronic submissions. The eStudy Data guidance states that a **Federal Register** notice will specify any new standards and version updates to FDA-supported study data standards that will be added to the Catalog, when the support for such standards and version updates begins or ends, and when the requirement to use such standards and version updates in submissions begins or ends.

Support for version 3.1.1 of the CDISC SENDIG begins February 15, 2022. The transition date for this version update is March 15, 2022. The requirement for electronic submissions to be submitted using version 3.1.1 of the CDISC SENDIG is March 15, 2023, for NDAs, ANDAs, certain BLAs, and certain INDs.

Dated: February 9, 2022.

Lauren K. Roth,

Associate Commissioner for Policy.

[FR Doc. 2022–03225 Filed 2–14–22; 8:45 am]

BILLING CODE 4164–01–P

DEPARTMENT OF HEALTH AND HUMAN SERVICES

Food and Drug Administration

[Docket No. FDA–2022–N–0105]

International Drug Scheduling; Convention on Psychotropic Substances; Single Convention on Narcotic Drugs; World Health Organization; Scheduling Recommendations; Brorphine; Metonitazene; Eutylone; Request for Comments

AGENCY: Food and Drug Administration, HHS.

ACTION: Notice.

SUMMARY: The Food and Drug Administration (FDA) is providing interested persons with the opportunity to submit written comments concerning recommendations by the World Health Organization (WHO) to impose international manufacturing and distributing restrictions, under international treaties, on certain drug substances. The comments received in response to this notice will be considered in preparing the United States' position on these proposals for a meeting of the United Nations Commission on Narcotic Drugs (CND) in Vienna, Austria, in March 2022. This notice is issued under the Controlled Substances Act (CSA).

DATES: Submit either electronic or written comments by February 28, 2022.

ADDRESSES: You may submit comments as follows. Please note that late, untimely filed comments will not be considered. Electronic comments must be submitted on or before February 28, 2022. The *https://www.regulations.gov* electronic filing system will accept comments until 11:59 p.m. Eastern Time at the end of February 28, 2022. Comments received by mail/hand delivery/courier (for written/paper submissions) will be considered timely if they are received on or before that date.

Electronic Submissions

Submit electronic comments in the following way:

- *Federal eRulemaking Portal: https://www.regulations.gov.* Follow the instructions for submitting comments. Comments submitted electronically, including attachments, to *https://www.regulations.gov* will be posted to the docket unchanged. Because your comment will be made public, you are solely responsible for ensuring that your comment does not include any confidential information that you or a third party may not wish to be posted, such as medical information, your or anyone else's Social Security number, or confidential business information, such as a manufacturing process. Please note that if you include your name, contact information, or other information that identifies you in the body of your comments, that information will be posted on *https://www.regulations.gov.*
- If you want to submit a comment with confidential information that you do not wish to be made available to the public, submit the comment as a written/paper submission and in the manner detailed (see ''Written/Paper Submissions'' and ''Instructions'').

Written/Paper Submissions

Submit written/paper submissions as follows:

- *Mail/Hand Delivery/Courier (for written/paper submissions):* Dockets Management Staff (HFA–305), Food and Drug Administration, 5630 Fishers Lane, Rm. 1061, Rockville, MD 20852.
- For written/paper comments submitted to the Dockets Management Staff, FDA will post your comment, as well as any attachments, except for information submitted, marked and identified, as confidential, if submitted as detailed in ''Instructions.''

Instructions: All submissions received must include the Docket No. FDA–2022–N–0105 for ''International Drug Scheduling; Convention on Psychotropic Substances; Single Convention on Narcotic Drugs; World Health Organization; Scheduling Recommendations; Brorphine; Metonitazene; Eutylone; Request for Comments.'' Received comments, those filed in a timely manner (see **ADDRESSES**), will be placed in the docket and, except for those submitted as ''Confidential Submissions,'' publicly viewable at *https://www.regulations.gov* or at the Dockets Management Staff between 9 a.m. and 4 p.m., Monday through Friday, 240–402–7500.

- Confidential Submissions—To submit a comment with confidential information that you do not wish to be made publicly available, submit your comments only as a written/paper submission. You should submit two copies total. One copy will include the

information you claim to be confidential with a heading or cover note that states ''THIS DOCUMENT CONTAINS CONFIDENTIAL INFORMATION.'' The Agency will review this copy, including the claimed confidential information, in its consideration of comments. The second copy, which will have the claimed confidential information redacted/blacked out, will be available for public viewing and posted on *https://www.regulations.gov.* Submit both copies to the Dockets Management Staff. If you do not wish your name and contact information to be made publicly available, you can provide this information on the cover sheet and not in the body of your comments and you must identify this information as ''confidential.'' Any information marked as ''confidential'' will not be disclosed except in accordance with 21 CFR 10.20 and other applicable disclosure law. For more information about FDA's posting of comments to public dockets, see 80 FR 56469, September 18, 2015, or access the information at: *https://www.govinfo.gov/content/pkg/FR-2015-09-18/pdf/2015-23389.pdf.*

Docket: For access to the docket to read background documents or the electronic and written/paper comments received, go to *https://www.regulations.gov* and insert the docket number, found in brackets in the heading of this document, into the ''Search'' box and follow the prompts and/or go to the Dockets Management Staff, 5630 Fishers Lane, Rm. 1061, Rockville, MD 20852, 240–402–7500.

FOR FURTHER INFORMATION CONTACT:

James R. Hunter, Center for Drug Evaluation and Research, Controlled Substance Staff, Food and Drug Administration, 10903 New Hampshire Ave., Bldg. 51, Rm. 5150, Silver Spring, MD 20993–0002, 301–796–3156, *james.hunter@fda.hhs.gov.*

SUPPLEMENTARY INFORMATION:

I. Background

The United States is a party to the 1971 Convention on Psychotropic Substances (1971 Convention). Section 201(d)(2)(B) of the CSA (21 U.S.C. 811(d)(2)(B)) provides that when the United States is notified under Article 2 of the 1971 Convention that the CND proposes to decide whether to add a drug or other substance to one of the schedules of the 1971 Convention, transfer a drug or substance from one schedule to another, or delete it from the schedules, the Secretary of State must transmit notice of such information to the Secretary of Health and Human Services (Secretary of HHS). The Secretary of HHS must then publish a summary of such information in the **Federal Register** and provide opportunity for interested persons to submit comments. The Secretary of HHS must then evaluate the proposal and furnish a recommendation to the Secretary of State that shall be binding on the representative of the United States in discussions and negotiations relating to the proposal.

As detailed in the following paragraphs, the Secretary of State has received notification from the Secretary-General of the United Nations (the Secretary-General) regarding one substance to be considered for control under the 1971 Convention. This notification reflects the recommendation from the 44th WHO Expert Committee for Drug Dependence (ECDD), which met in October 2021. In the **Federal Register** of July 23, 2021 (86 FR 39038), FDA announced the WHO ECDD review and invited interested persons to submit information for WHO's consideration.

The full text of the notification from the Secretary-General is provided in section II of this document. Section 201(d)(2)(B) of the CSA requires the Secretary of HHS, after receiving a notification proposing scheduling, to publish a notice in the **Federal Register** to provide the opportunity for interested persons to submit information and comments on the proposed scheduling action.

The United States is also a party to the 1961 Single Convention on Narcotic Drugs (1961 Convention). The Secretary of State has received a notification from the Secretary-General regarding two substances to be considered for control under this convention. The CSA does not require HHS to publish a summary of such information in the **Federal Register**. Nevertheless, to provide interested and affected persons an opportunity to submit comments regarding the WHO recommendations for drugs under the 1961 Convention, the notification regarding these substances is also included in this **Federal Register** notice. The comments will be shared with other relevant Agencies to assist the Secretary of State in formulating the position of the United States on the control of these substances. The HHS recommendations are not binding on the representative of the United States in discussions and negotiations relating to the proposal regarding control of substances under the 1961 Convention.

II. United Nations Notification

The formal notification from the United Nations that identifies the drug substances and explains the basis for the scheduling recommendations is reproduced as follows (non-relevant text removed):

Reference:
NAR/CL.13/2021
WHO/ECDD44; 1961C-Art.3, 1971C-Art.2
CU 2021/453/DTA/SGB

The Secretariat of the United Nations presents its compliments to the Permanent Mission of the United States of America and has the honour to inform the Government that in a letter dated 18 November 2021, the Director-General of the World Health Organization (WHO), pursuant to article 3, paragraphs 1 and 3 of the Single Convention on Narcotic Drugs of 1961 as amended by the 1972 Protocol (1961 Convention), and article 2, paragraphs 1 and 4 of the Convention on Psychotropic Substances of 1971 (1971 Convention), notified the Secretary-General of the following recommendations of the forty-third Meeting of the WHO's Expert Committee on Drug Dependence (ECDD):

Substance recommended to be added to Schedule I of the 1961 Convention:

—Brorphine

IUPAC (International Union of Pure and Applied Chemistry) name: 1-[1-[1-(4-Bromophenyl)ethyl]-piperidin-4-yl]-1,3-dihydro-2*H*-imidazol-2-one

—Metonitazene

IUPAC name: *N,N*-Diethyl-2-(2-(4-methoxybenzyl)-5-nitro-1*H*-benzo[*d*]imidazol-1-yl)ethan-1-amine

Substances recommended to be added to Schedule II of the 1971 Convention:

—Eutylone (*alternate name:* 3,4-methylenedioxy-*alpha*-ethylamino butiophenone)

IUPAC names: 1-(Benzo[*d*][1,3]dioxol-5-yl)-2-(ethylamino)butan-1-one 1-(1,3-Benzodioxol-5-yl)-2-(ethylamino)butan-1-one

Substances to be kept under surveillance:

In the letter from the Director-General of WHO to the Secretary-General, reference is also made to the recommendation made by the WHO Expert Committee on Drug Dependence (ECDD), at its forty-fourth meeting, to keep the following substances under surveillance:

—4F–MDMB–BICA (*alternate name:* 4F–MDMB–BUTICA)

IUPAC names: Methyl 2-({[1-(4-fluorobutyl)-1*H*-indol-3-yl]carbonyl}amino)-3,3-dimethylbutanoate; Methyl 2-(1-(4-fluorobutyl)-1*H*-indole-3-carbaxamido)-3,3-dimethylbutanoate

—Benzylone (*alternate name:* 3,4-Methylenedioxy-*N*-benzylcathinone)

IUPAC name: 1-(Benzo[*d*][1,3]dioxol-5-yl)-2-(benzylamino)propan-1-one

—Kratom, mitragynine, and 7-hydroxymitragynine

—Phenibut (*alternate name:* 4-amino-3-phenyl-butyric acid)

IUPAC name: 4-Amino-3-phenylbutanoic acid

In accordance with the provisions of article 3, paragraph 2, of the 1961 Convention and article 2, paragraph 2, of the 1971 Convention, the notification is hereby transmitted as annex I to the present note. In connection with the notification, WHO also submitted a summary of the assessments and

findings for these recommendations made by ECDD, which is transmitted as annex II.

Also, in accordance with the same provisions, the notification from WHO will be brought to the attention of the sixty-fifth session of the Commission on Narcotic Drugs (14–18 March 2022, tent.) in a pre-session document that will be made available in the six official languages of the United Nations on the website of the 65th session of the Commission on Narcotic Drugs: *https://www.unodc.org/unodc/en/commissions/CND/session/65_Session_2022/65CND_Main.html.*

In order to assist the Commission in reaching a decision, it would be appreciated if the Permanent Mission could communicate any comments it considers relevant to the possible scheduling of substances recommended by WHO to be placed under international control under the 1961 Convention, namely:

—Brorphine

—Metonitazene; as well as any economic, social, legal, administrative or other factors that it considers relevant to the possible scheduling of substances recommended by WHO to be placed under international control under the 1971 Convention, namely:

—Eutylone (*alternate name:* 3,4-methylenedioxy-alpha-ethylamino butiophenone).

The Secretariat of the United Nations avails itself of this opportunity to renew to the Permanent Mission of the United States of America to the United Nations (Vienna) the assurances of its highest consideration.

8 December 2021

Annex I

Letter addressed to the Secretary-General of the United Nations from the Director-General of the World Health Organization, dated 18 November 2021

''The Forty-fourth Meeting of the World Health Organization (WHO)'s Expert Committee on Drug Dependence (ECDD) was convened in a virtual format from 11 to 15 October 2021 and was coordinated from the WHO headquarters in Geneva.

WHO is mandated by the 1961 and 1971 International Drug Control Conventions to make recommendations to the United Nations Secretary-General on the need for, and level of, international control of psychoactive substances based on the advice of its independent scientific advisory body, the ECDD. In order to recommend if a psychoactive substance should be placed under international control or if its level of control should be changed, the WHO convenes the ECDD annually to thoroughly review the potential for abuse, dependence, and harm to health of a psychoactive substance, as well as any therapeutic applications.

The Forty-fourth WHO ECDD Meeting critically reviewed five new psychoactive substances, including one synthetic cannabinoid receptor agonist (4F–MDMB–BICA), two novel synthetic opioids (brorphine; metonitazene), and two cathinones/stimulants (eutylone; benzylone). These substances had not previously been formally reviewed by WHO and are currently not under international control. Information was brought to WHO's attention that these substances are clandestinely manufactured, of especially serious risk to public health and society, and of no recognised therapeutic use by any Party. Therefore, a critical review to consider international scheduling measures was undertaken for each substance so that the Expert Committee could consider whether information available about these substances may justify the scheduling or a change in scheduling of a substance in the 1961 or 1971 Conventions.

In addition, the Forty-fourth ECDD Meeting carried out pre-reviews of kratom, mitragynine, and 7-hydroxymitragynine; and phenibut to consider whether current information justified a critical review.

With reference to Article 3, paragraphs 1 and 3 of the Single Convention on Narcotic Drugs (1961), as amended by the 1972 Protocol, and Article 2, paragraphs 1 and 4 of the Convention on Psychotropic Substances (1971), WHO is pleased to endorse and submit the following recommendations of the Forty-fourth Meeting of the ECDD:

To be added to Schedule I of the Single Convention on Narcotic Drugs (1961):

—Brorphine

IUPAC (International Union of Pure and Applied Chemistry) name: 1-[1-[1-(4-Bromophenyl)ethyl]- piperidin-4-yl]-1,3-dihydro-2*H*- imidazol-2- one

—Metonitazene

IUPAC name: N,N-Diethyl-2-(2-(4-methoxybenzyl)-5-nitro-1*H*-benzo[*d*]imidazol-1-yl)ethan-1-amine

To be added to Schedule II of the Convention on Psychotropic Substances (1971):

—Eutylone (*alternate name:* 3,4-methylenedioxy-*alpha*-ethylamino butiophenone)

IUPAC names: 1-(Benzo[*d*][1,3]dioxol-5-yl)-2-(ethylamino)butan-1-one; 1-(1,3-Benzodioxol-5-yl)-2-(ethylamino)butan-1-one

To be kept under surveillance:

—4F–MDMB–BICA (*alternate name:* 4F–MDMB–BUTICA)

IUPAC names: Methyl 2-({[1-(4-fluorobutyl)-1*H*-indol-3-yl]carbonyl}amino)-3,3-dimethylbutanoate; Methyl 2-(1-(4-fluorobutyl)-1*H*-indole-3- carbaxamido)-3,3- dimethylbutanoate

—Benzylone (*alternate name:* 3,4-Methylenedioxy-N-benzylcathinone)

IUPAC name: 1-(Benzo[*d*][1,3]dioxol-5-yl)-2-(benzylamino)propan-1-one

—Kratom, mitragynine, 7-hydroxymitragynine

—Phenibut (*alternate name:* 4-amino-3-phenyl-butyric acid)

IUPAC name: 4-Amino-3-phenylbutanoic acid

The assessments and findings on which these recommendations are based are set out in detail in the Forty-fourth ECDD Meeting Report of the WHO Expert Committee on Drug Dependence. A summary of the assessments and findings for these recommendations made by the ECDD is contained in Annex 1 to this letter.

I am very pleased with the ongoing collaboration between WHO, the United Nations Office on Drugs and Crime and the International Narcotics Control Board, and in particular, how this collaboration has benefited the work of the WHO Expert Committee on Drug Dependence and more generally, the implementation of the operational recommendations of the United Nations General Assembly Special Session 2016.''

Annex II

Summary assessment and recommendations of the 44th Expert Committee on Drug Dependence, 11–15 October 2021

Substances to be added to Schedule I of the Single Convention on Narcotic Drugs (1961):

Brorphine

Substance Identification

Brorphine (*IUPAC chemical name:* 1-[1-[1-(4-bromophenyl)ethyl]-piperidin-4-yl]-1,3-dihydro-2*H*-imidazol-2-one) has a chemical structure similar to bezitramide, an opioid listed in Schedule I of the 1961 Convention. Brorphine freebase has been described as a white or off-white solid, and the hydrochloride salt as a neat solid, with seized samples described as white, yellowish, gray, purple, or white powder, or in crystal form. It is also found in tablets and capsules as falsified opioid medicines. It is reported to be used by the oral, inhalation, and intravenous routes of administration.

WHO Review History

Brorphine has not been formally reviewed by WHO and is not currently under international control. Information was brought to WHO's attention that this substance is manufactured clandestinely, poses a risk to public health, and is of no recognized therapeutic use.

Similarity to Known Substances and Effects on Central Nervous System

Brorphine is a full agonist at the μ-opioid receptor, with greater potency than morphine, and less potency than fentanyl. It has analgesic effects that are reversed by an opioid antagonist and, based on its mechanism of action, it would be expected to produce other typical opioid effects such as respiratory depression and sedation. Brorphine may be convertible to bezitramide, which is an opioid listed in Schedule I of the 1961 Single Convention on Narcotic Drugs.

Dependence Potential

No controlled animal or human studies have examined the dependence potential of brorphine. As a potent μ-opioid agonist, it would be expected to produce dependence similar to other opioid substances. Unverified online reports describe tolerance and withdrawal following repeated brorphine use.

Actual Abuse and/or Evidence of Likelihood of Abuse

In an animal model predictive of abuse potential, brorphine was shown to produce effects similar to morphine and fentanyl.

Deaths involving brorphine have been reported in several countries. Deaths commonly occur after use of brorphine in

combination with other opioids or with benzodiazepines such as flualprazolam. Brorphine has been identified in falsified opioid medicines, suggesting that sometimes its use may be unintentional. Fatal and non-fatal intoxications due to brorphine share features with intoxications due to other opioids, such as pulmonary oedema. Brorphine has been detected with other substances in biological fluids in cases of driving under the influence.

Seizures have been reported in multiple countries and regions.

Therapeutic Usefulness

Brorphine is not known to have any therapeutic use.

Recommendation

The mechanism of action of brorphine indicates that it is liable to have similar abuse potential and ill effects as opioids that are controlled under Schedule I of the 1961 Single Convention on Narcotic Drugs.

Its use has been reported in a number of countries and has been associated with adverse effects, including death. It has no known therapeutic use and is likely to cause substantial harm.

Recommendation: The Committee recommended that brorphine (*IUPAC chemical name:* 1-[1-[1-(4-bromophenyl)ethyl]-piperidin-4-yl]-1,3-dihydro-2*H*-imidazol-2-one) be added to Schedule I of the 1961 Single Convention on Narcotic Drugs.

Metonitazene

Substance Identification

Metonitazene (*IUPAC chemical name: N,N*-Diethyl-2-(2-(4-methoxybenzyl)-5-nitro-1*H*-benzo[*d*]imidazol-1-yl)ethan-1-amine) belongs to the series of 2-benzylbenzimidazole opioid compounds. It is a white or off-white/beige or coloured powder, and is sometimes crystalline in consistency. Reports suggest that it is used intranasally and by intravenous injection.

WHO Review History

Metonitazene has not been formally reviewed by WHO and is not currently under international control. Information was brought to WHO's attention that this substance is manufactured clandestinely, poses a risk to public health, and has no recognized therapeutic use.

Similarity to Known Substances and Effects on Central Nervous System

Metonitazene is a chemical analogue of etonitazene and isotonitazene, both of which are Schedule I compounds under the Single Convention on Narcotic Drugs, 1961. Metonitazene is a potent opioid analgesic with a rapid onset of action and greater potency than fentanyl and hydromorphone. Limited early clinical research demonstrated that metonitazene produces analgesia and typical opioid adverse effects including sedation, respiratory depression, nausea, and vomiting. The effects of metonitazene have been shown to be reversed by an opioid antagonist.

Dependence Potential

Animal studies have demonstrated that metonitazene suppresses opioid withdrawal and has potent μ-opioid agonist effects. No controlled human studies have reported on the dependence potential of metonitazene, but as a potent μ-opioid agonist, it would be expected to produce dependence similar to other opioids.

Actual Abuse and/or Evidence of Likelihood of Abuse

No controlled studies have been reported on the abuse potential of metonitazene, but as it is a potent μ-opioid receptor agonist, it would be expected to have high abuse liability. Online reports from people who report use of metonitazene describe its euphoric and opioid-like effects.

A number of deaths have been reported in association with use of metonitazene. In many of these cases metonitazene has been used in combination with other opioids or benzodiazepines. However, in some fatalities, metonitazene was the sole substance identified in the analyzed biological samples.

Trafficking and use of metonitazene have been reported from a number of countries across several regions.

Therapeutic Usefulness

Metonitazene is not known to have any therapeutic use.

Recommendation

The mechanism of action and effects of metonitazene indicate that it is liable to have similar abuse potential and ill effects as opioids that are controlled under Schedule I of the 1961 Single Convention on Narcotic Drugs. Its use has been reported in a number of countries and been associated with adverse effects, including death. Metonitazene has no known therapeutic use and is likely to cause substantial harm.

Recommendation: The Committee recommended that metonitazene (*IUPAC chemical name: N,N*-Diethyl-2-(2-(4-methoxybenzyl)-5-nitro-1*H*-benzo[*d*]imidazol-1-yl)ethan-1-amine) be added to Schedule I of the 1961 Single Convention on Narcotic Drugs.

Substances to be added to Schedule II of the Convention on Psychotropic Substances (1971):

Eutylone (3,4-methylenedioxy-*alpha*-ethylamino butiophenone)

Substance Identification

Eutylone (*IUPAC chemical name:* 1-(Benzo[*d*][1,3]dioxol-5-yl)-2-(ethylamino)butan-1-one) is a synthetic cathinone of the phenethylamine class. The hydrochloride salt of eutylone has been described as a crystalline solid. Eutylone is mostly found as tablets, capsules, and crystals. It is used orally and intranasally.

WHO Review History

Eutylone has not been formally reviewed by WHO and is not currently under international control. Information was brought to WHO's attention that this substance is manufactured clandestinely, poses a risk to public health, and has no recognized therapeutic use.

Similarity to Known Substances and Effects on Central Nervous System

Eutylone is a synthetic cathinone with a mechanism of action and effects similar to other cathinones and to stimulants such as methamphetamine. Related cathinones, such as methylone and N-ethylnorpentylone, are listed under Schedule II of the Convention on Psychotropic Substances of 1971. The clinical features described are similar to other cathinones, including sympathomimetic effects and psychostimulant effects such as euphoria, insomnia, tachycardia, agitation, anxiety, delirium and psychosis.

Dependence Potential

No animal or human studies have been conducted on the dependence potential of eutylone. Based on its overall profile of effects, eutylone would be expected to produce dependence similar to other psychostimulants.

Actual Abuse and/or Evidence of Likelihood of Abuse

In an animal model predictive of abuse potential, eutylone has been shown to produce effects similar to those of methamphetamine. Online reports from people reporting use of eutylone suggest that it has high abuse potential.

Eutylone has been detected in biological samples from forensic, post-mortem, and driving under the influence cases. Published case reports describe fatalities as a result of eutylone use. In addition to the effects described above, reported adverse events in these cases have included rhabdomyolysis, hyperthermia, hypertension, and seizures.

Eutylone has been detected in seized materials in multiple countries across several regions.

Therapeutic Usefulness

Eutylone is not known to have any therapeutic use.

Recommendation

Eutylone has effects similar to those of related cathinones listed under Schedule II of the Convention on Psychotropic Substances of 1971.

There is evidence that this substance is used in multiple countries in various regions. Eutylone causes substantial harm, including severe adverse events and fatal intoxications. Its mode of action suggests a likelihood of abuse and it poses a substantial risk to public health. It has no known therapeutic usefulness.

Recommendation: The Committee recommended that eutylone (*IUPAC chemical name:* 1-(Benzo[*d*][1,3]dioxol-5-yl)-2-(ethylamino)butan-1-one) be added to Schedule II of the Convention on Psychotropic Substances of 1971.

Substances to be kept under surveillance:

4F–MDMB–BICA (4F–MDMB–BUTICA)

Substance Identification

4F–MDMB–BICA (*IUPAC chemical name:* Methyl 2-({[1-(4-fluorobutyl)-1*H*-indol-3-yl]carbonyl}amino)-3,3-dimethylbutanoate) has a chemical structure similar to a number of synthetic cannabinoids. It has been identified in seized materials as a white, off-white, brown or orange powder, and has been identified in herbal blends, vaping solutions, and infused onto paper. It is also available as a reference material as crystalline solid.

WHO Review History

4F–MDMB–BICA has not been formally reviewed by WHO and is not currently under international control. Information was brought to WHO's attention that this substance is manufactured clandestinely, poses a risk to public health, and has no recognized therapeutic use.

Similarity to Known Substances and Effects on Central Nervous System

4F–MDMB–BICA is a synthetic cannabinoid, structurally related to 5F–MDMB–PICA, a synthetic cannabinoid, which is included in Schedule II of the United Nations Single Convention on Psychotropic Substances of 1971. Some data suggest that 4F–MDMB–BICA has activity at the cannabinoid CB1 receptor, but this action may not be identical to that exerted by other CB1 agonists. No animal or human studies have evaluated the effects of 4F–MDMB–BICA, and there is insufficient data on 4F–MDMB–BICA overdose cases to confirm that it has typical cannabinoid effects.

Dependence Potential

No studies have been reported in animals or humans on the dependence potential of 4F–MDMB–BICA.

Actual Abuse and/or Evidence of Likelihood of Abuse

No studies have been reported in animals or humans to indicate the likelihood of abuse of 4F–MDMB–BICA. A number of countries in various regions have reported use of 4F–MDMB–BICA. Its use has been associated with multiple deaths and Emergency Department visits, although multiple substances have been present in analysed biological samples, and the relationship between 4F–MDMB–BICA exposure and cause of death is not established.

Theraputic Usefulness

4F–MDMB–BICA is not known to have any therapeutic use.

Recommendation

4F–MDMB–BICA has a structure similar to other synthetic cannabinoids, but its mechanism of action has yet to be confirmed. The magnitude of harm due to 4F–MDMB–BICA alone is unclear, and no animal or human studies have examined the effects or abuse potential of 4F–MDMB–BICA. Based on the limited information available concerning abuse, dependence and risks to public health, there is insufficient evidence to justify placing 4F–MDMB–BICA under international control.

Recommendation: The Committee recommended that 4F–MDMB–BICA (*IUPAC chemical name:* Methyl 2-({[1-(4-fluorobutyl)-1*H*-indol-3-yl]carbonyl}amino)-3,3-dimethylbutanoate) be kept under surveillance by the WHO Secretariat.

Benzylone (3,4-Methylenedioxy-N-benzylcathinone)

Substance Identification

Benzylone (*IUPAC chemical name:* 1-(Benzo[*d*][1,3]dioxol-5-yl)-2-(benzylamino)propan-1-one) is a ring-substituted synthetic cathinone. Benzylone is a white powder. The hydrochloride salt of benzylone is a crystalline solid.

WHO Review History

Benzylone has not been formally reviewed by WHO and is not currently under international control. Information was brought to WHO's attention that this substance is manufactured clandestinely, poses a risk to public health, and has no recognized therapeutic use.

Similarity to Known Substances and Effects on Central Nervous System

Benzylone has a mode of action suggestive of stimulant effects similar to other cathinones. However, these effects are relatively weak and it fails to produce stimulant effects in animal models.

Limited information is available on its effects in humans.

Dependence Potential

There is no information available on the dependence potential of benzylone in animals or humans

Actual Abuse and/or Evidence of Likelihood of Abuse

In an animal model predictive of abuse potential, benzylone did not produce effects similar to MDMA, and its similarity to methamphetamine is unclear. No human studies have been conducted to assess abuse liability.

Benzylone has been detected in seized materials in multiple countries across several regions.

There is little information concerning the adverse effects of benzylone. Although it has been detected in postmortem samples along with other substances, there is no significant evidence of benzylone playing a causative role in deaths.

Therapeutic Usefulness

Benzylone is not known to have any therapeutic use.

Recommendation

Benzylone is a synthetic cathinone that has some effects in common with substances listed under Schedule II of the Convention on Psychotropic Substances of 1971. However, its effects are relatively weak and there is no consistent evidence supporting the likelihood of abuse or dependence. In addition, there is no consistent evidence of the extent of public health and social problems related to use of benzylone.

Recommendation: The Committee recommended that benzylone (*IUPAC chemical name:* 1-(Benzo[*d*][1,3]dioxol-5-yl)-2-(benzylamino)propan-1-one) be kept under surveillance by the WHO Secretariat.

Kratom, mitragynine, and 7-hydroxymitragynine

Substance Identification

Kratom is the common term for Mitragyna speciosa, a tree native to Southeast Asia. Kratom use is almost exclusively oral, typically by chewing the leaves, ingesting powdered leaf, or drinking a kratom infusion or decoction, or by ingesting powdered leaf as a capsule or pill or dissolved in a beverage. Other forms such as extracts and resins are also used.

Several alkaloids have been detected in kratom plants. The main known psychoactive components of kratom are mitragynine and 7-hydroxymitragynine, both of which are found in the leaves of Mitragyna speciosa. Mitragynine is the most abundant alkaloid in kratom.

Whilst 7-hydroxymitragynine is a minor alkaloid, it is also a metabolite of mitragynine.

WHO Review History

Kratom has been under ECDD surveillance since 2020 due to a country level report indicating the potential for abuse, dependence, and harm to public health from mitragynine and 7-hydroxymitragynine, and a report from an international organization regarding documented fatalities associated with kratom use. A pre-review on kratom, mitragynine, and 7-hydroxymitragynine was initiated following consideration of these reports.

Similarity to Known Substances and Effects on Central Nervous System

Mitragynine and 7-hydroxymitragynine are partial agonists at the mu-opioid receptor. Human studies demonstrate the analgesic effects of kratom, while kratom extract, mitragynine and 7-hydroxymitragynine have been shown to be antinociceptive in animal models. The antinociceptive effects are reversed by an opioid antagonist.

Mitragynine also binds to adrenergic receptors, serotonergic and dopamine receptors. Although there is limited information regarding its effects at these receptors, kratom extracts and mitragynine have been reported in animal studies to have a variety of non-opioid-like behavioural effects, including antidepressant and antipsychotic effects.

Reported adverse effects as a result of kratom intoxication have included neuropsychiatric (agitation, confusion, sedation, hallucinations, tremor, seizure, coma), cardiovascular (tachycardia, hypertension), gastrointestinal (abdominal pain, nausea, vomiting) and respiratory (respiratory depression) symptoms. A number of cases of kratom-associated liver toxicity have been documented.

Dependence Potential

In animal models, repeated dosing with mitragynine produced dependence, evidenced by naloxone-precipitated withdrawal. The withdrawal syndrome from kratom appears to be less severe than withdrawal from morphine.

In humans, opioid-like withdrawal symptoms have been reported following cessation of kratom use. Limited epidemiological evidence indicates that withdrawal is usually mild. There are a small number of cases of neonatal opioid withdrawal symptoms in neonates born to mothers who used kratom regularly.

Actual Abuse and/or Evidence of Likelihood of Abuse

Animal studies with kratom extracts have not shown abuse liability in one animal model. Mitragynine and 7-hydroxymitragynine have effects indicative of abuse liability in some animal models but not in others. Mitragynine is not self-administered by animals, while 7-hydroxymitragynine has been shown to be

self-administered, supporting a likely abuse liability.

Kratom can produce serious toxicity in people who use high doses, but the number of cases is probably low as a proportion of the total number of people who use kratom. Although mitragynine has been analytically confirmed in a number of deaths, almost all involve use of other substances, so the degree to which kratom use has been a contributory factor to fatalities is unclear.

Kratom and mitragynine have been associated with cases of driving under the influence, but their role in driving impairment could not be established in most instances.

Multiple countries across various regions report nonmedical use of kratom. Seizures of kratom and related products have been reported in several countries.

Therapeutic Usefulness

People report using kratom to self-medicate a variety of disorders and conditions, including pain, opioid withdrawal, opioid use disorder, anxiety, and depression. Kratom is being used as a part of traditional medicine in some countries.

Research is ongoing to determine the basic pharmacology and the potential therapeutic value of kratom, mitragynine, and 7-hydroxymitragynine.

Recommendation

Kratom contains multiple alkaloids. The two main known psychoactive alkaloids, mitragynine and 7-hydroxymitragynine, produce at least some effects similar to opioids under international control.

Mitragynine, the most abundant of these alkaloids, also has non-opioid actions, the significance of which is unclear. There is mixed evidence on the abuse liability of mitragynine in animal models. Kratom is used for self-medication for a variety of disorders but there is limited evidence of abuse liability in humans.

Cessation of regular use of kratom may lead to withdrawal symptoms.

The Committee considered information regarding the traditional use and investigation into possible medical applications of kratom.

The Committee concluded that there is insufficient evidence to recommend a critical review of kratom. With respect to mitragynine and 7-hydroxymitragynine, the Committee, except for one member, also concluded that there is insufficient evidence to recommend a critical review at this time.

Recommendation: The Committee recommended that kratom, mitragynine, and 7-hydroxymitragynine be kept under surveillance by the WHO Secretariat.

Phenibut (4-amino-3-phenyl-butyric acid)

Substance Identification

Phenibut (*IUPAC chemical name:* 4-Amino-3-phenylbutanoic acid) is a structural analogue of baclofen and gabapentin. It is produced in various formulations including tablets and powder for oral use, and crystalline form. Phenibut is a registered pharmaceutical in some countries and is also marketed online for a number of uses including as a sleep aid, mood enhancer, treatment for anxiety and a cognitive enhancer.

WHO Review History

Phenibut has not been formally reviewed by WHO and is not currently under international control. Phenibut has been under ECDD surveillance since 2017 due to reports from Member States of its abuse and dependence potential. A pre-review was initiated following consideration of these reports.

Similarity to Known Substances and Effects on Central Nervous System

Phenibut acts primarily as an agonist at the $GABA_B$ receptor, similar to baclofen, and at the $\alpha2$-δ subunit of voltage dependent calcium channels, similar to gabapentin.

Animal studies show that phenibut has dose-dependent analgesic, antidepressant, and anxiolytic effects, which are mediated both by its $GABA_B$ agonist effects and actions at voltage dependent calcium channels.

Phenibut intoxication has presented with central nervous system depressive symptoms including decreased level of consciousness, muscle tone, stupor, depressed respiration, temperature dysregulation, hyper- or hypotension, and coma. However, in other cases individuals have presented with agitation, hallucinations, seizures, and delirium.

Dependence Potential

There are no studies conducted in animals examining the dependence potential of phenibut. People who use phenibut describe escalating dosing suggestive of tolerance and difficulty in cessation.

There are a limited number of case reports of withdrawal symptoms following abrupt discontinuation of high dose phenibut use. Reported symptoms have included insomnia, psychomotor agitation, delusions, psychosis, disorganized thought patterns, auditory/visual hallucinations, anxiety, depression, fatigue, dizziness, seizures, decreased appetite, nausea and vomiting, palpitations, and tachycardia. However, in most cases the use of phenibut was not verified analytically, and the clinical picture was complicated by the use of other drugs.

Actual Abuse and/or Evidence of Likelihood of Abuse

No controlled animal or human studies have examined the abuse potential of phenibut.

There are reports from different countries of adverse effects due to nonmedical use of phenibut. Medically unsupervised use of phenibut obtained via the internet is often at doses much higher than those used clinically. However, many cases involve multiple drugs, and the role of phenibut in these cases remains unclear.

Multiple countries over several regions report seizures of phenibut. However, the extent of non-medical use is unknown.

Therapeutic Usefulness

Phenibut is approved in a few countries as a medicine for a range of psychiatric and neurological conditions.

Recommendation

The Committee noted that there has been concern in several countries regarding the nonmedical use of phenibut. While there are reports of adverse effects and of a withdrawal syndrome following cessation of use, the information on these cases is very limited. In addition, there is very little information on the abuse liability of phenibut, on the magnitude of its misuse or abuse, and on its similarity to currently internationally controlled substances.

The Committee also noted that phenibut is used therapeutically in a small number of countries.

Recommendation: The Committee recommended that phenibut (*IUPAC chemical name:* 4-Amino-3-phenylbutanoic acid) should not proceed to critical review but should be kept under surveillance by the WHO Secretariat.

III. Discussion

Although WHO has made specific scheduling recommendations for each of the drug substances, the CND is not obliged to follow the WHO recommendations. Options available to the CND for substances considered for control under the 1971 Convention include the following: (1) Accept the WHO recommendations; (2) accept the recommendations to control but control the drug substance in a schedule other than that recommended; or (3) reject the recommendations entirely.

Brorphine (*chemical name:* 1-(1-(1-(4-bromophenyl)ethyl)piperidin-4-yl)-1,3-dihydro-2*H*-benzo[*d*]imidazol-2-one) is a potent synthetic opioid encountered as both a single substance of abuse and in combination with other opioid substances, such as heroin and fentanyl. The appearance of brorphine on the illicit drug market is similar to other designer drugs trafficked for their psychoactive effects. Beginning in June 2019, brorphine emerged in the United States illicit, synthetic drug market as evidenced by its identification in drug seizures. The use of brorphine has been associated with at least seven fatalities between June and July 2020 in the United States. Brorphine is not approved for medical use in the United States. On March 1, 2021, the U.S. Drug Enforcement Administration (DEA) issued a temporary order to control brorphine as a Schedule I substance under the CSA, therefore additional permanent controls may be needed if brorphine is placed in Schedule I of the 1961 Convention.

Metonitazene (*chemical name: N,N*-diethyl-2-(2-(4-methoxybenzyl)-5-nitro-1*H*-benzo[*d*]imidazol-1-yl)ethan-1-amine) belongs to the series of 2-benzylbenzimidazole opioid compounds and is classified as a potent opioid structurally resembling etonitazene and dissimilar in structure to other synthetic opioids such as fentanyl analogues. Novel opioids such as metonitazene have been reported to

cause psychoactive effects and adverse events, including deaths similar to heroin, fentanyl, and other opioids. As of January 2021, metonitazene has been identified in eight blood specimens associated with postmortem death investigations in the United States. There are no commercial or approved medical uses for metonitazene. On December 7, 2021, the DEA issued a temporary order (86 FR 69182) to control metonitazene as a Schedule I substance under the CSA, therefore additional permanent controls may be needed if metonitazene is placed in Schedule I of the 1961 Convention.

Eutylone (*chemical name:* 1-(1,3-benzodioxol-5-yl)-2-(ethylamino)butan-1-one) is a designer drug of the phenethylamine class. Eutylone is a synthetic cathinone with chemical structural and pharmacological similarities to Schedule I and II amphetamines and cathinones, such as to 3,4-methylenedioxymethamphetamine, methylone, and pentylone. Eutylone emerged in the United States illicit, synthetic drug market in 2014 as evidenced by its identification in drug seizures. Other evidence indicates that eutylone, like other Schedule I synthetic cathinones, is abused for its psychoactive effects. Adverse effects associated with synthetic cathinones abuse include agitation, hypertension, tachycardia, and death. Eutylone is not approved for medical use in the United States. As a positional isomer of pentylone, eutylone is controlled in Schedule I of the CSA. As such, additional permanent controls will not be needed if eutylone is placed in Schedule II of the Convention on Psychotropic Substances.

FDA, on behalf of the Secretary of HHS, invites interested persons to submit comments on the notifications from the United Nations concerning these drug substances. FDA, in cooperation with the National Institute on Drug Abuse, will consider the comments on behalf of HHS in evaluating the WHO scheduling recommendations. Then, under section 201(d)(2)(B) of the CSA, HHS will recommend to the Secretary of State what position the United States should take when voting on the recommendations for control of substances under the 1971 Convention at the CND meeting in March 2022.

Comments regarding the WHO recommendations for control of brorphine and metonitazene under the 1961 Single Convention will also be forwarded to the relevant Agencies for consideration in developing the U.S. position regarding narcotic substances at the CND meeting.

Dated: February 9, 2022.

Lauren K. Roth,

Associate Commissioner for Policy.

[FR Doc. 2022–03229 Filed 2–14–22; 8:45 am]

BILLING CODE 4164–01–P

DEPARTMENT OF HEALTH AND HUMAN SERVICES

Food and Drug Administration

[Docket Nos. FDA–2010–D–0575 and FDA–2021–N–0764]

Compliance Policy Guide Sec. 510.800 Beverages—Serving Size Labeling; Compliance Policy Guide Sec. 540.420 Raw Breaded Shrimp—Microbiological Criteria for Evaluating Compliance With Current Good Manufacturing Practice Regulations; and Compliance Policy Guide Sec. 562.800 Vending Machine Food—Labeling; Withdrawal of Guidances

AGENCY: Food and Drug Administration, HHS.

ACTION: Notice; withdrawal.

SUMMARY: The Food and Drug Administration (FDA or we) is announcing the withdrawal of three compliance policy guides (CPG) entitled ''Compliance Policy Guide Sec. 510.800 Beverages—Serving Size Labeling,'' ''Compliance Policy Guide Sec. 540.420 Raw Breaded Shrimp—Microbiological Criteria for Evaluating Compliance with Current Good Manufacturing Practice Regulations,'' and ''Compliance Policy Guide Sec. 562.800 Vending Machine Food—Labeling.'' We are withdrawing these CPGs because they have become outdated or have been superseded by subsequent FDA actions.

DATES: The withdrawal is applicable February 15, 2022.

ADDRESSES: For access to the docket, go to *https://www.regulations.gov* and insert docket number FDA–2010–D–0575 for ''Compliance Policy Guide Sec. 510.800 Beverages—Serving Size Labeling'' or FDA–2021–N–0764 for ''Compliance Policy Guide Sec. 540.420 Raw Breaded Shrimp—Microbiological Criteria for Evaluating Compliance with Current Good Manufacturing Practice Regulations'' and ''Compliance Policy Guide Sec. 562.800 Vending Machine Food—Labeling'' into the ''Search'' box and follow the prompts and/or go to the Dockets Management Staff, 5630 Fishers Lane, Rm. 1061, Rockville, MD 20852, 240–402–7500.

FOR FURTHER INFORMATION CONTACT: Kevin Kwon, Office of Compliance (HFS–605), Center for Food Safety and Applied Nutrition, Food and Drug Administration, 5001 Campus Dr., College Park, MD 20740, 240–402–4597; or Alexandra Jurewitz, Office of Regulations and Policy (HFS–024), Center for Food Safety and Applied Nutrition, Food and Drug Administration, 5001 Campus Dr., College Park, MD 20740, 240–402–2378.

SUPPLEMENTARY INFORMATION:

I. Background

We are announcing the withdrawal of three CPGs entitled ''Compliance Policy Guide Sec. 510.800 Beverages—Serving Size Labeling,'' ''Compliance Policy Guide Sec. 540.420 Raw Breaded Shrimp—Microbiological Criteria for Evaluating Compliance with Current Good Manufacturing Practice Regulations,'' and ''Compliance Policy Guide Sec. 562.800 Vending Machine Food—Labeling.''

CPG Sec. 510.800 entitled ''Beverages—Serving Size Labeling'' was first issued in December 2010. This CPG provided guidance for FDA staff and industry as to when we would typically consider not taking enforcement action in connection to a ''12 [fluid ounce] (360 [milliliter])'' labeled serving size on specific types of beverages larger than 20 fluid ounces. On May 27, 2016, FDA issued a final rule entitled ''Food Labeling: Serving Sizes of Foods That Can Reasonably Be Consumed at One Eating Occasion; Dual-Column Labeling; Updating, Modifying, and Establishing Certain Reference Amounts Customarily Consumed; Serving Size for Breath Mints; and Technical Amendments'' (81 FR 34000). The final rule amended the Reference Amounts Customarily Consumed (RACCs) that are used by manufacturers to determine serving sizes for certain foods, including certain beverages. Our regulations, at 21 CFR 101.12(b), table 2, lists the categories for each type of food product and each category's current RACC. Due to the updated RACCs for certain beverages, CPG Sec. 510.800 is now obsolete, and the enforcement discretion provided in this CPG is no longer applicable. Therefore, CPG Sec. 510.800 is being withdrawn.

CPG Sec. 540.420 entitled ''Raw Breaded Shrimp—Microbiological Criteria for Evaluating Compliance with Current Good Manufacturing Practice Regulations'' was first issued in August 1983. This CPG used data collected in fiscal year 1978 and listed an outdated sampling and compliance structure. The compliance criteria and the methodology used in the CPG have become outdated and are no longer useful. This CPG is superseded by the

Seafood Hazard Analysis Critical Control Point regulation in 21 CFR part 123. Seafood processors must prevent food safety hazards using critical controls and appropriate verification activities, such as end-product and in-process testing (21 CFR part 123). This CPG is also superseded by FDA's Fish and Fishery Products Hazards and Controls Guidance (Ref. 1), which describes controls for food safety hazards related to breaded shrimp. For these reasons, CPG Sec. 540.420 is now obsolete and is being withdrawn.

CPG 562.800 entitled ''Vending Machine Food—Labeling'' was first issued in September 1976. This CPG provided guidance for FDA staff and industry regarding certain mandatory label information for foods and beverages dispensed in vending machines after movement in interstate commerce.

On March 23, 2010, President Obama signed the Patient Protection and Affordable Care Act of 2010 (ACA; Pub, L, 111–148) into law. Section 4205 of the ACA amended section 403(q) of the Federal Food, Drug, and Cosmetic Act (FD&C Act) (21 U.S.C. 343(q)) and section 403A of the FD&C Act (21 U.S.C. 343–1), which governs Federal preemption of State and local food labeling requirements. Section 4205 of the ACA added section 403(q)(5)(H)(viii) to the FD&C Act to require that if an article of food is sold from a vending machine that (1) does not permit a prospective purchaser to examine the Nutrition Facts Panel before purchasing the article or does not otherwise provide visible nutrition information at the point of purchase; and (2) is operated by a person who is engaged in the business of owning or operating 20 or more vending machines, then the vending machine operator must provide a sign in close proximity to each article of food or the selection button that includes a clear and conspicuous statement disclosing the number of calories contained in the article of food.

In the **Federal Register** of December 1, 2014 (79 FR 71259), we issued a final rule to implement these labeling requirements; the regulations are codified at 21 CFR 101.8. With this regulatory change, CPG 562.800 is now obsolete and is being withdrawn.

II. Reference

The following reference is on display at the Dockets Management Staff (see **ADDRESSES**) and is available for viewing by interested persons between 9 a.m. and 4 p.m., Monday through Friday; it is also available electronically at *https://www.regulations.gov.*

1. FDA, ''Fish and Fishery Products Hazards and Controls Guidance, 4th Edition,'' June 2021.

Dated: February 9, 2022.

Lauren K. Roth,

Associate Commissioner for Policy.

[FR Doc. 2022–03224 Filed 2–14–22; 8:45 am]

BILLING CODE 4164–01–P

DEPARTMENT OF HEALTH AND HUMAN SERVICES

Health Resources and Services Administration

Agency Information Collection Activities: Proposed Collection: Public Comment Request HRSA Ryan White HIV/AIDS Program Part F AIDS Education and Training Center Program Evaluation Activities, OMB No. 0915–0281—Extension

AGENCY: Health Resources and Services Administration (HRSA), Department of Health and Human Services.

ACTION: Notice.

SUMMARY: In compliance with the requirement for opportunity for public comment on proposed data collection projects of the Paperwork Reduction Act of 1995, HRSA announces plans to submit an Information Collection Request (ICR), described below, to the Office of Management and Budget (OMB). Prior to submitting the ICR to OMB, HRSA seeks comments from the public regarding the burden estimate, below, or any other aspect of the ICR.

DATES: Comments on this ICR should be received no later than April 18, 2022.

ADDRESSES: Submit your comments to *paperwork@hrsa.gov* or mail the HRSA Information Collection Clearance Officer, Room 14N136B, 5600 Fishers Lane, Rockville, MD 20857.

FOR FURTHER INFORMATION CONTACT: To request more information on the proposed project or to obtain a copy of the data collection plans and draft instruments, email *paperwork@hrsa.gov* or call Samantha Miller, the acting HRSA Information Collection Clearance Officer at (301) 443–9094.

SUPPLEMENTARY INFORMATION: When submitting comments or requesting information, please include the information request collection title for reference, pursuant to the Paperwork Reduction Act of 1995.

Information Collection Request Title: HRSA AIDS Education and Training Center Evaluation Activities, OMB No. 0915–0281—Extension.

Abstract: The Ryan White HIV/AIDS Program's (RWHAP) AIDS Education and Training Center (AETC) Program, authorized under Title XXVI of the Public Health Service Act, supports a network of regional and national centers that conduct targeted, multi-disciplinary education and training programs for health care providers treating people with HIV. The RWHAP AETC Program's purpose is to increase the number of health care providers who are effectively educated and motivated to counsel, diagnose, treat, and medically manage people with HIV.

The RWHAP AETC Program recipients gather data on the training activities they conduct using two data collection instruments. The Event Record (ER) gathers information about each training activity including training programs, individual clinical consultations, group clinical consultations, and technical assistance events. Information on the people trained, the length of training, the content and level of the training and collaborations with other organizations is also collected. The Participant Information Form (PIF) collects information from each of the training participants, including demographics, profession, the types of HIV services they provide, and the characteristics of the patient population they serve. The RWHAP AETC Program recipients are required to report aggregated data on the training activities and trainees to HRSA once a year. HRSA is requesting an extension of the current ER and PIF with minor changes. To more accurately capture the length of a training event, RWHAP AETC trainers will be asked to report the event's end date in addition to the start date on the ER. Additionally, if an event was not supported by RWHAP AETC core funding, respondents will be able to skip three subsequent questions on the ER that are not applicable. Respondents will have the option to report multiple clinic and health professional program identification numbers to reflect multiple affiliations on the ER. Additional options were added for seven questions in the ER to allow for more complete responses (*e.g.,* an ''other'' response option was added to two questions). In addition to changes on the ER, minor revisions were made to the response options for multiple questions on the PIF to improve clarity (*e.g.,* ''Substance Abuse'' was changed to ''Substance Use Disorder'').

Need and Proposed Use of the Information: HRSA uses the data collected when conducting RWHAP AETC programmatic assessments to determine future program needs. These data allow HRSA to identify where gaps exist in training HIV professionals as well as to measure whether training

events are meeting the goals of the National HIV/AIDS Strategy.

Likely Respondents: RWHAP AETC trainees complete the PIF either at the start or at conclusion of an event. Trainers complete an ER for each training event they conduct during the year. In addition, each regional RWHAP AETC (eight total) and the RWHAP AETC National Coordinating Resource Center compile these data once a year for submission to HRSA.

Burden Statement: Burden in this context means the time expended by persons to generate, maintain, retain, disclose, or provide the information requested. This includes the time needed to review instructions; to develop, acquire, install, and utilize technology and systems for the purpose of collecting, validating, and verifying information, processing and maintaining information, and disclosing and providing information; to train personnel and to be able to respond to a collection of information; to search data sources; to complete and review the collection of information; and to transmit or otherwise disclose the information. The total annual burden hours estimated for this ICR are summarized in the table below.

The estimated annual response burden to trainers, as well as attendees of training programs, is as follows:

TOTAL ESTIMATED ANNUALIZED BURDEN HOURS

Form name	Number of respondents	Number of responses per respondent	Total responses	Average burden per response (in hours)	Total burden hours
Participant Information Form	164,385	1	164,385	0.167	27,452
Event Record	12,980	1	12,980	0.200	2,596
Aggregate Data Set	8	1	8	32.000	256
Total	177,373		177,366		30,304

HRSA specifically requests comments on (1) the necessity and utility of the proposed information collection for the proper performance of the agency's functions, (2) the accuracy of the estimated burden, (3) ways to enhance the quality, utility, and clarity of the information to be collected, and (4) the use of automated collection techniques or other forms of information technology to minimize the information collection burden.

Maria G. Button,

Director, Executive Secretariat.

[FR Doc. 2022–03206 Filed 2–14–22; 8:45 am]

BILLING CODE 4165–15–P

DEPARTMENT OF HEALTH AND HUMAN SERVICES

[Document Identifier: OS–0937–0166]

Agency Information Collection Request. 60-Day Public Comment Request

AGENCY: Office of the Secretary, HHS.

ACTION: Notice.

SUMMARY: In compliance with the requirement of the Paperwork Reduction Act of 1995, the Office of the Secretary (OS), Department of Health and Human Services, is publishing the following summary of a proposed collection for public comment.

DATES: Comments on the ICR must be received on or before April 18, 2022.

ADDRESSES: Submit your comments to *Sherrette.Funn@hhs.gov* or by calling (202) 795–7714.

FOR FURTHER INFORMATION CONTACT: When submitting comments or requesting information, please include the document identifier 0937–0166 and project title for reference, to Sherrette A. Funn, email: *Sherrette.Funn@hhs.gov,* or call (202) 795–7714 the Reports Clearance Officer.

SUPPLEMENTARY INFORMATION: Interested persons are invited to send comments regarding this burden estimate or any other aspect of this collection of information, including any of the following subjects: (1) The necessity and utility of the proposed information collection for the proper performance of the agency's functions; (2) the accuracy of the estimated burden; (3) ways to enhance the quality, utility, and clarity of the information to be collected; and (4) the use of automated collection techniques or other forms of information technology to minimize the information collection burden.

Title of the Collection: HHS 42 CFR subpart B; Sterilization of Persons in Federally Assisted Family Planning Projects.

Type of Collection: Extension.

OMB No.: 0937–0166.

Abstract: The Department of Health and Human Service, Office of Population Affairs is requesting an extension of a currently approved collection for the disclosure and recordkeeping requirements codified at 42 CFR part 50, subpart B (''Sterilization of Persons in Federally Assisted Family Planning Projects''). The consent form solicits information to assure voluntary and informed consent to persons undergoing sterilization in programs of health services which are supported by federal financial assistance administered by the United States Public Health Service (PHS). It provides additional procedural protection to the individual and the regulation requires that the consent form be a copy of the form that is appended to the PHS regulation. In 2003, the PHS sterilization consent form was revised to conform to OMB government-wide standards for the collection of race/ethnicity data and to incorporate the PRA burden statement as part of the consent form. We are requesting a three-year extension.

Type of respondent: Individuals seeking sterilization.

Frequency: Once; prior to procedure.

ANNUALIZED BURDEN HOUR TABLE

Forms (if necessary)	Respondents (if necessary)	Number of respondents	Number of responses per respondents	Average burden per response	Total burden hours
Information Disclosure for *Sterilization Consent Form.*	Citizens Seeking Sterilization	100,000	1	1	100,000
Record-keeping for *Sterilization Consent Form.*	Citizens Seeking Sterilization	100,000	1	15/60	25,000
Total	.....	.....	.....	.....	125,000

Sherrette A. Funn,

Paperwork Reduction Act Reports Clearance Officer, Office of the Secretary.

[FR Doc. 2022–03130 Filed 2–14–22; 8:45 am]

BILLING CODE 4150–25–P

DEPARTMENT OF HOMELAND SECURITY

Coast Guard

[Docket No. USCG–2022–0044]

Certificates of Alternative Compliance for the Thirteenth Coast Guard District

AGENCY: Coast Guard, DHS.

ACTION: Notification of issuance of a certificate of alternative compliance.

SUMMARY: The Coast Guard announces that the Chief of Prevention Division, Thirteenth Coast Guard District has issued certificates of alternative compliance from the International Regulations for Preventing Collisions at Sea, 1972 (72 COLREGS), for the AGAMENTICUS HULL 68, BAKER, HULL 71, DECEPTION HULL 69, OLYMPUS HULL 70, RAINIER HULL 67, SENTINEL HULL 72. Due to the construction and placement of the sidelights, these vessels cannot fully comply with the light, shape, or sound signal provisions of the 72 COLREGS without interfering with their design and construction. We are issuing this notice because its publication is required by statute. This notification of issuance of a certificate of alternative compliance promotes the Coast Guard's marine safety mission.

DATES: The Certificates of Alternative Compliance were issued on January 14, 2022.

FOR FURTHER INFORMATION CONTACT: For information or questions about this notice, call or email Ms. Jill L. Lazo Thirteenth District, U.S. Coast Guard; telephone 206–220–7275, *Jill.L.Lazo@uscg.mil.*

SUPPLEMENTARY INFORMATION: The United States is signatory to the International Maritime Organization's International Regulations for Preventing Collisions at Sea, 1972 (72 COLREGS), as amended. The special construction or purpose of some vessels makes them unable to comply with the light, shape, or sound signal provisions of the 72 COLREGS. Under statutory law, however, specified 72 COLREGS provisions are not applicable to a vessel of special construction or purpose if the Coast Guard determines that the vessel cannot comply fully with those requirements without interfering with the special function of the vessel.[1]

The owner, builder, operator, or agent of a special construction or purpose vessel may apply to the Coast Guard District Office in which the vessel is being built or operated for a determination that compliance with alternative requirements is justified,[2] and the Chief of the Prevention Division would then issue the applicant a certificate of alternative compliance (COAC) if he or she determines that the vessel cannot comply fully with 72 COLREGS light, shape, and sound signal provisions without interference with the vessel's special function.[3] If the Coast Guard issues a COAC, it must publish notice of this action in the **Federal Register**.[4]

The Chief of Prevention Division, Thirteenth Coast Guard District, U.S. Coast Guard, certifies that the AGAMENTICUS HULL 68, BAKER HULL 71, DECEPTION HULL 69, OLYMPUS HULL 70, RAINIER HULL 67, SENTINEL HULL 72 are towing vessels of special construction or purpose, and that, with respect to the position of the side lights, it is not possible to comply fully with the requirements of the provisions enumerated in the 72 COLREGS, without interfering with the normal operation, construction, or design of the vessel. The Chief of Prevention Division, Thirteenth Coast Guard District, U.S. Coast Guard, further finds and certifies that the sidelights are in the closest possible compliance with the applicable provisions of the 72 COLREGS.[5]

This notice is issued under authority of 33 U.S.C. 1605(c) and 33 CFR 81.18.

Dated: February 9, 2022.

P.C. Burkett,

Captain, U.S. Coast Guard, Chief, Prevention Division, Thirteenth Coast Guard District.

[FR Doc. 2022–03191 Filed 2–14–22; 8:45 am]

BILLING CODE 9110–04–P

[1] 33 U.S.C. 1605.

[2] 33 CFR 81.5.

[3] 33 CFR 81.9.

[4] 33 U.S.C. 1605(c) and 33 CFR 81.18.

[5] 33 U.S.C. 1605(a); 33 CFR 81.9.

DEPARTMENT OF HOMELAND SECURITY

U.S. Customs and Border Protection

[1651–0016]

Insular Possession Certificate of Origin (CBP Form 3229)

AGENCY: U.S. Customs and Border Protection (CBP), Department of Homeland Security.

ACTION: 30-Day notice and request for comments; extension of an existing collection of information.

SUMMARY: The Department of Homeland Security, U.S. Customs and Border Protection will be submitting the following information collection request to the Office of Management and Budget (OMB) for review and approval in accordance with the Paperwork Reduction Act of 1995 (PRA). The information collection is published in the **Federal Register** to obtain comments from the public and affected agencies.

DATES: Comments are encouraged and must be submitted (no later than March 17, 2022) to be assured of consideration.

ADDRESSES: Written comments and/or suggestions regarding the item(s) contained in this notice should be sent within 30 days of publication of this notice to *www.reginfo.gov/public/do/PRAMain.* Find this particular information collection by selecting ''Currently under 30-day Review—Open for Public Comments'' or by using the search function.

FOR FURTHER INFORMATION CONTACT: Requests for additional PRA information should be directed to Seth Renkema, Chief, Economic Impact Analysis Branch, U.S. Customs and Border Protection, Office of Trade, Regulations and Rulings, 90 K Street NE, 10th Floor, Washington, DC 20229–1177, telephone number 202–325–0056, or via email *CBP_PRA@cbp.dhs.gov.* Please note that the contact information provided here is solely for questions regarding this notice. Individuals seeking information about other CBP programs should contact the CBP National Customer Service Center at 877–227–5511, (TTY) 1–800–877–8339, or CBP website at *https://www.cbp.gov/.*

SUPPLEMENTARY INFORMATION: CBP invites the general public and other Federal agencies to comment on the proposed and/or continuing information collections pursuant to the Paperwork Reduction Act of 1995 (44 U.S.C. 3501 *et seq.*). This proposed information collection was previously published in the **Federal Register** (Volume 86 FR Page 67962) on November 30, 2021, allowing for a 60-day comment period. This notice allows for an additional 30 days for public comments. This process is conducted in accordance with 5 CFR 1320.8. Written comments and suggestions from the public and affected agencies should address one or more of the following four points: (1) Whether the proposed collection of information is necessary for the proper performance of the functions of the agency, including whether the information will have practical utility; (2) the accuracy of the agency's estimate of the burden of the proposed collection of information, including the validity of the methodology and assumptions used; (3) suggestions to enhance the quality, utility, and clarity of the information to be collected; and (4) suggestions to minimize the burden of the collection of information on those who are to respond, including through the use of appropriate automated, electronic, mechanical, or other technological collection techniques or other forms of information technology, *e.g.,* permitting electronic submission of responses. The comments that are submitted will be summarized and included in the request for approval. All comments will become a matter of public record.

Overview of This Information Collection

Title: Insular Possession Certificate of Origin.

OMB Number: 1651–0016.

Form Number: CBP Form 3229.

Current Actions: Extension without change of an existing information collection.

Type of Review: Extension (without change).

Affected Public: Businesses.

Abstract: CBP Form 3229, Insular Possession Certificate of Origin, is used by shippers and importers to declare that goods being imported into the United States are grown or the product of an insular possession of the United States and/or produced or manufactured in a U.S. insular possession from material grown in or product of such possession. This form includes a list of the foreign materials in the goods, including their description and value. CBP Form 3229 is used as documentation for goods entitled to enter the U.S. free of duty. This form is authorized by General Note 3(a)(iv) of the Harmonized Tariff Schedule of the United States (19 U.S.C. 1202) and is provided for by 19 CFR part 7.3. CBP Form 3229 is accessible at: *https://www.cbp.gov/newsroom/publications/forms?title=3229&=Apply.*

Type of Information Collection: Insular Possession Certificate of Origin (CBP Form 3229).

Estimated Number of Respondents: 113.

Estimated Number of Annual Responses per Respondent: 20.

Estimated Number of Total Annual Responses: 2,260.

Estimated Time per Response: 20 minutes.

Estimated Total Annual Burden Hours: 753.

Dated: February 9, 2022.

Seth D. Renkema,

Branch Chief, Economic Impact Analysis Branch, U.S. Customs and Border Protection.

[FR Doc. 2022–03136 Filed 2–14–22; 8:45 am]

BILLING CODE 9111–14–P

DEPARTMENT OF HOMELAND SECURITY

Federal Emergency Management Agency

[Docket ID FEMA–2020–0016]

Meetings To Implement Pandemic Response Voluntary Agreement Under Section 708 of the Defense Production Act

AGENCY: Federal Emergency Management Agency, Department of Homeland Security.

ACTION: Announcement of meetings.

SUMMARY: The Federal Emergency Management Agency (FEMA) is holding meetings under the Plan of Action to Establish a National Strategy for the Manufacture, Allocation, and Distribution of Personal Protective Equipment (PPE) to Respond to COVID–19 and the Plan of Action to Establish a National Strategy for the Manufacture, Allocation, and Distribution of Diagnostic Test Kits and other Testing Components to Respond to COVID–19, in order to implement the Voluntary Agreement for the Manufacture and Distribution of Critical Healthcare Resources Necessary to Respond to a Pandemic.

DATES:

- Thursday, February 17, 2022, from 1 p.m. to 3 p.m. Eastern Time (ET).
- Thursday, February 24, 2022, from 1 p.m. to 3 p.m. ET.

FOR FURTHER INFORMATION CONTACT: Robert Glenn, FEMA Office of Response and Recovery's Office of Business, Industry, Infrastructure Integration, via email at *OB3I@fema.dhs.gov* or via phone at (202) 212–1666.

SUPPLEMENTARY INFORMATION: Notice of these meetings is provided as required by section 708(h)(8) of the Defense Production Act (DPA), 50 U.S.C. 4558(h)(8), and consistent with 44 CFR part 332.

The DPA authorizes the making of ''voluntary agreements and plans of action'' with representatives of industry, business, and other interests to help provide for the national defense.[1] The President's authority to facilitate voluntary agreements with respect to responding to the spread of COVID–19 within the United States was delegated to the Secretary of Homeland Security in Executive Order 13911.[2] The Secretary of Homeland Security further delegated this authority to the FEMA Administrator.[3]

On August 17, 2020, after the appropriate consultations with the Attorney General and the Chairman of the Federal Trade Commission, FEMA completed and published in the **Federal Register** a ''Voluntary Agreement, Manufacture and Distribution of Critical Healthcare Resources Necessary to Respond to a Pandemic'' (Voluntary Agreement).[4] Unless terminated earlier,

[1] 50 U.S.C. 4558(c)(1).

[2] 85 FR 18403 (Apr. 1, 2020).

[3] DHS Delegation 09052, Rev. 00.1 (Apr. 1, 2020); DHS Delegation Number 09052 Rev. 00 (Jan. 3, 2017).

[4] 85 FR 50035 (Aug. 17, 2020). The Attorney General, in consultation with the Chairman of the Federal Trade Commission, made the required finding that the purpose of the voluntary agreement may not reasonably be achieved through an agreement having less anticompetitive effects or without any voluntary agreement and published the finding in the **Federal Register** on the same day. 85 FR 50049 (Aug. 17, 2020).

the Voluntary Agreement is effective until August 17, 2025, and may be extended subject to additional approval by the Attorney General after consultation with the Chairman of the Federal Trade Commission. The Agreement may be used to prepare for or respond to any pandemic, including COVID–19, during that time.

On December 7, 2020, the first plan of action under the Voluntary Agreement—the Plan of Action to Establish a National Strategy for the Manufacture, Allocation, and Distribution of Personal Protective Equipment (PPE) to Respond to COVID–19 (PPE Plan of Action)—was finalized.[5] The PPE Plan of Action established several sub-committees under the Voluntary Agreement, focusing on different aspects of the PPE Plan of Action.

On May 24, 2021, four additional plans of action under the Voluntary Agreement—the Plan of Action to Establish a National Strategy for the Manufacture, Allocation, and Distribution of Diagnostic Test Kits and other Testing Components to respond to COVID–19, the Plan of Action to Establish a National Strategy for the Manufacture, Allocation, and Distribution of Drug Products, Drug Substances, and Associated Medical Devices to respond to COVID–19, the Plan of Action to Establish a National Strategy for the Manufacture, Allocation, and Distribution of Medical Devices to respond to COVID–19, and the Plan of Action to Establish a National Strategy for the Manufacture, Allocation, and Distribution of Medical Gases to respond to COVID–19—were finalized.[6] These plans of action established several sub-committees under the Voluntary Agreement, focusing on different aspects of each plan of action.

The meetings are chaired by the FEMA Administrator's delegates from the Office of Response and Recovery (ORR) and Office of Policy and Program Analysis (OPPA), attended by the Attorney General's delegates from the U.S. Department of Justice, and attended by the Chairman of the Federal Trade Commission's delegates. In implementing the Voluntary Agreement, FEMA adheres to all procedural requirements of 50 U.S.C. 4558 and 44 CFR part 332.

Meeting Objectives: The objectives of the meetings are as follows:

1. Convene the Requirements Sub-Committees under the Personal Protective Equipment (PPE) and Diagnostic Test Kits Plans of Action to establish priorities related to the COVID–19 response under the Voluntary Agreement.
2. Gather Requirements Sub-Committee Participants and Attendees to ask targeted questions for situational awareness.
3. Identify pandemic-related information gaps and areas that merit sharing by holding quarterly meetings of the Requirements Sub-Committees with key stakeholders.
4. Identify potential Objectives and Actions that should be completed under the Requirements Sub-Committees.

Meetings Closed to the Public: By default, the DPA requires meetings held to implement a voluntary agreement or plan of action be open to the public.[7] However, attendance may be limited if the Sponsor[8] of the voluntary agreement finds that the matter to be discussed at a meeting falls within the purview of matters described in 5 U.S.C. 552b(c), such as trade secrets and commercial or financial information.

The Sponsor of the Voluntary Agreement, the FEMA Administrator, found that these meetings to implement the Voluntary Agreement involve matters which fall within the purview of matters described in 5 U.S.C. 552b(c) and the meetings are therefore closed to the public.

Specifically, these meetings may require participants to disclose trade secrets or commercial or financial information that is privileged or confidential. Disclosure of such information allows for meetings to be closed to the public pursuant to 5 U.S.C. 552b(c)(4).

The success of the Voluntary Agreement depends wholly on the willing participation of the private sector participants. Failure to close these meetings to the public could reduce active participation by the signatories due to a perceived risk that sensitive company information could be released to the public. A public disclosure of a private sector participant's information executed prematurely could reduce trust and support for the Voluntary Agreement.

A resulting loss of support by the participants for the Voluntary Agreement would significantly hinder the implementation of the Agency's objectives. Thus, these meeting closures are permitted pursuant to 5 U.S.C. 552b(c)(9)(B).

Deanne Criswell,

Administrator, Federal Emergency Management Agency.

[FR Doc. 2022–03168 Filed 2–14–22; 8:45 am]

BILLING CODE 9111–19–P

[5] *See* 85 FR 78869 (Dec. 7, 2020). *See also* 85 FR 79020 (Dec. 8, 2020).

[6] *See* 86 FR 27894 (May 24, 2021). *See also* 86 FR 28851 (May 28, 2021).

[7] *See* 50 U.S.C. 4558(h)(7).

[8] "[T]he individual designated by the President in subsection (c)(2) [of section 708 of the DPA] to administer the voluntary agreement, or plan of action." 50 U.S.C. 4558(h)(7).

DEPARTMENT OF HOMELAND SECURITY

U.S. Immigration and Customs Enforcement

[OMB Control Number 1653–0041]

Agency Information Collection Activities; Revision of a Currently Approved Collection: Designation of Attorney in Fact/Revocation of Designation of Attorney in Fact

AGENCY: U.S. Immigration and Customs Enforcement, Department of Homeland Security.

ACTION: 60-Day notice.

SUMMARY: In accordance with the Paperwork Reduction Act (PRA) of 1995, the Department of Homeland Security (DHS), U.S. Immigration and Customs Enforcement (ICE) will submit the following Information Collection Request (ICR) to the Office of Management and Budget (OMB) for review and clearance.

DATES: Comments are encouraged and will be accepted until April 18, 2022.

ADDRESSES: All submissions received must include the OMB Control Number 1653–0041 in the body of the correspondence, the agency name and Docket ID ICEB–2009–0001. All comments received will be posted without change to *http://www.regulations.gov,* including any personal information provided.

(1) *Online.* Submit comments via the Federal eRulemaking Portal website at *http://www.regulations.gov* under e-Docket ID number ICEB–2009–0001.

FOR FURTHER INFORMATION CONTACT: If you have questions related to this collection, call, or email John Monette, Revenue Management Branch, (802) 288–7697, *john.p.monette@ice.dhs.gov.*

SUPPLEMENTARY INFORMATION:

Comment

Written comments and suggestions from the public and affected agencies concerning the proposed collection of information should address one or more of the following four points:

(1) Evaluate whether the proposed collection of information is necessary for the proper performance of the

functions of the agency, including whether the information will have practical utility;

(2) Evaluate the accuracy of the agency's estimate of the burden of the proposed collection of information, including the validity of the methodology and assumptions used;

(3) Enhance the quality, utility, and clarity of the information to be collected; and

(4) Minimize the burden of the collection of information on those who are to respond, including through the use of appropriate automated, electronic, mechanical, or other technological collection techniques or other forms of information technology, *e.g.,* permitting electronic submission of responses.

Overview of This Information Collection

(1) *Type of Information Collection:* Revision of a Currently Approved Collection.

(2) *Title of the Form/Collection:* Designation of Attorney in Fact/ Revocation of Attorney in Fact.

(3) *Agency form number, if any, and the applicable component of the Department of Homeland Security sponsoring the collection:* I–312/I–312A; U.S. Immigration and Customs Enforcement.

(4) Affected public who will be asked or required to respond, as well as a brief abstract: Primary: State, Local, or Tribal Government. Section 103.6, the Immigration and Nationality Act (INA), provides for the posting of surety or cash bonds. All bonds posted in immigration cases shall be executed on Form I–352, Immigration Bond, and secured with some form of collateral by an Obligor. In the case of a cash bond, the Obligor will deposit with U.S. Immigration and Customs Enforcement (ICE) the face value of the bond. The Obligor can designate a third party as an Attorney in Fact to accept on their behalf the return of the collateral security deposited to secure the surety bond upon cancellation of the bond or performance of the Obligor. The Form I–312, Designation of Attorney in Fact, is the instrument used by the Obligor to officially designate their Attorney in Fact. Upon receipt of a properly executed Form I–312, ICE Financial Operations will remit to the Attorney in Fact the principal and interest on the security deposit in the event of a bond cancellation, or the interest on the security deposit in the event of a bond breach. Immigration bonds might remain in place for years, and Obligors might choose to appoint a new Attorney in Fact as circumstances change. To ensure that ICE Financial Operations properly executes its fiduciary duties to the Obligor under the Form I–352 bond contract, and exercises due diligence in ensuring that remittances are made to the proper person, ICE uses Form I–312A as the document by which the Obligor could expressly indicate that a previously valid Form I–312 Attorney in Fact designation had been revoked. The requested revisions are specific to the instructions concerning obligor requirements and the attorney's authority to perform acts necessary to receive proceeds of the bond. There are revisions to the I–312 instructions. The revisions relate to the obligor requirements and to the attorney's authority to perform acts necessary to received bond proceeds.

(5) *An estimate of the total number of respondents and the amount of time estimated for an average respondent to respond:* 193 responses at 1 hour (60 minutes) per response.

(6) *An estimate of the total public burden (in hours) associated with the collection:* 193 annual burden hours.

(7) *An estimate of the total public burden (in cost) associated with the collections:* $6,370.

Dated: February 10, 2022.

Scott Elmore,

PRA Clearance Officer.

[FR Doc. 2022–03228 Filed 2–14–22; 8:45 am]

BILLING CODE 9111–28–P

DEPARTMENT OF HOMELAND SECURITY

U.S. Citizenship and Immigration Services

[OMB Control Number 1615–0114]

Agency Information Collection Activities; Extension, Without Change, of a Currently Approved Collection: Application for Civil Surgeon Designation

AGENCY: U.S. Citizenship and Immigration Services, Department of Homeland Security.

ACTION: 60-Day notice.

SUMMARY: The Department of Homeland Security (DHS), U.S. Citizenship and Immigration Services (USCIS) invites the general public and other Federal agencies to comment upon this proposed extension of a currently approved collection of information. In accordance with the Paperwork Reduction Act (PRA) of 1995, the information collection notice is published in the **Federal Register** to obtain comments regarding the nature of the information collection, the categories of respondents, the estimated burden (*i.e.,* the time, effort, and resources used by the respondents to respond), the estimated cost to the respondent, and the actual information collection instruments.

DATES: Comments are encouraged and will be accepted for 60 days until April 18, 2022.

ADDRESSES: All submissions received must include the OMB Control Number 1615–0114 in the body of the letter, the agency name and Docket ID USCIS–2013–0002. Submit comments via the Federal eRulemaking Portal website at *https://www.regulations.gov* under e-Docket ID number USCIS–2013–0002.

FOR FURTHER INFORMATION CONTACT: USCIS, Office of Policy and Strategy, Regulatory Coordination Division, Samantha Deshommes, Chief, telephone number (240) 721–3000 (This is not a toll-free number. Comments are not accepted via telephone message). Please note contact information provided here is solely for questions regarding this notice. It is not for individual case status inquiries. Applicants seeking information about the status of their individual cases can check Case Status Online, available at the USCIS website at *https://www.uscis.gov,* or call the USCIS Contact Center at 800–375–5283 (TTY 800–767–1833).

SUPPLEMENTARY INFORMATION:

Comments

You may access the information collection instrument with instructions or additional information by visiting the Federal eRulemaking Portal site at: *https://www.regulations.gov* and entering USCIS–2013–0002 in the search box. All submissions will be posted, without change, to the Federal eRulemaking Portal at *https://www.regulations.gov,* and will include any personal information you provide. Therefore, submitting this information makes it public. You may wish to consider limiting the amount of personal information that you provide in any voluntary submission you make to DHS. DHS may withhold information provided in comments from public viewing that it determines may impact the privacy of an individual or is offensive. For additional information, please read the Privacy Act notice that is available via the link in the footer of *https://www.regulations.gov.*

Written comments and suggestions from the public and affected agencies should address one or more of the following four points:

(1) Evaluate whether the proposed collection of information is necessary

for the proper performance of the functions of the agency, including whether the information will have practical utility;

(2) Evaluate the accuracy of the agency's estimate of the burden of the proposed collection of information, including the validity of the methodology and assumptions used;

(3) Enhance the quality, utility, and clarity of the information to be collected; and

(4) Minimize the burden of the collection of information on those who are to respond, including through the use of appropriate automated, electronic, mechanical, or other technological collection techniques or other forms of information technology, *e.g.,* permitting electronic submission of responses.

Overview of This Information Collection

(1) *Type of Information Collection:* Extension, Without Change, of a Currently Approved Collection.

(2) *Title of the Form/Collection:* Application for Civil Surgeon Designation.

(3) *Agency form number, if any, and the applicable component of the DHS sponsoring the collection:* I–910; USCIS.

(4) *Affected public who will be asked or required to respond, as well as a brief abstract: Primary:* Business or other for-profit. This information collection is required to determine whether a physician meets the statutory and regulatory requirement for civil surgeon designation. For example, all documents are reviewed to determine whether the physician has a currently valid medical license and whether the physician has had any action taken against him or her by the medical licensing authority of the U.S. state(s) or U.S. territories in which he or she practices. If the Application for Civil Surgeon Designation (Form I–910) is approved, the physician is included in USCIS's public Civil Surgeon locator and is authorized to complete Form I–693 (OMB Control Number 1615–0033) for an applicant's adjustment of status.

(5) *An estimate of the total number of respondents and the amount of time estimated for an average respondent to respond:* The estimated total number of respondents for the information collection I–910 is 470 and the estimated hour burden per response is 2 hours.

(6) *An estimate of the total public burden (in hours) associated with the collection:* The total estimated annual hour burden associated with this collection is 940 hours.

(7) *An estimate of the total public burden (in cost) associated with the collection:* The estimated total annual cost burden associated with this collection of information is $24,205.00.

Dated: February 9, 2022.

Samantha L. Deshommes,

Chief, Regulatory Coordination Division, Office of Policy and Strategy, U.S. Citizenship and Immigration Services, Department of Homeland Security.

[FR Doc. 2022–03159 Filed 2–14–22; 8:45 am]

BILLING CODE 9111–97–P

DEPARTMENT OF HOMELAND SECURITY

U.S. Citizenship and Immigration Services

[OMB Control Number 1615–NEW]

Agency Information Collection Activities; New Collection: Petition for Nonimmigrant Worker: E and TN Classifications; Petition for Nonimmigrant Worker: L Classifications; Petition for Nonimmigrant Worker: H–3, P, Q or R Classifications; and Petition for Nonimmigrant Worker: O Classifications

AGENCY: U.S. Citizenship and Immigration Services, Department of Homeland Security.

ACTION: 30-Day notice.

SUMMARY: The Department of Homeland Security (DHS), U.S. Citizenship and Immigration Services (USCIS) will be submitting the following information collection request to the Office of Management and Budget (OMB) for review and clearance in accordance with the Paperwork Reduction Act of 1995. The purpose of this notice is to allow an additional 30 days for public comments.

DATES: Comments are encouraged and will be accepted until March 17, 2022.

ADDRESSES: Written comments and/or suggestions regarding the item(s) contained in this notice, especially regarding the estimated public burden and associated response time, must be submitted via the Federal eRulemaking Portal website at *http://www.regulations.gov* under e-Docket ID number USCIS–2021–0016. All submissions received must include the OMB Control Number 1615–NEW in the body of the letter, the agency name and Docket ID USCIS–2021–0016.

FOR FURTHER INFORMATION CONTACT: USCIS, Office of Policy and Strategy, Regulatory Coordination Division, Samantha Deshommes, Chief, Telephone number (240) 721–3000 (This is not a toll-free number; comments are not accepted via telephone message.). Please note contact information provided here is solely for questions regarding this notice. It is not for individual case status inquiries. Applicants seeking information about the status of their individual cases can check Case Status Online, available at the USCIS website at *http://www.uscis.gov,* or call the USCIS Contact Center at (800) 375–5283; TTY (800) 767–1833.

SUPPLEMENTARY INFORMATION:

Comments

The information collection notice was previously published in the **Federal Register** on August 18, 2021, at 86 FR 46261 allowing for a 60-day public comment period. USCIS received nine comments in connection with the 60-day notice. USCIS made edits to the I–129E&TN, I–129L, I–129MISC, and I–129O Forms and Instructions in response to comments.

You may access the information collection instrument with instructions, or additional information by visiting the Federal eRulemaking Portal site at: *http://www.regulations.gov* and enter USCIS–2021–0016 in the search box. The comments submitted to USCIS via this method are visible to the Office of Management and Budget and comply with the requirements of 5 CFR 1320.12(c). All submissions will be posted, without change, to the Federal eRulemaking Portal at *http://www.regulations.gov,* and will include any personal information you provide. Therefore, submitting this information makes it public. You may wish to consider limiting the amount of personal information that you provide in any voluntary submission you make to DHS. DHS may withhold information provided in comments from public viewing that it determines may impact the privacy of an individual or is offensive. For additional information, please read the Privacy Act notice that is available via the link in the footer of *http://www.regulations.gov.*

Written comments and suggestions from the public and affected agencies should address one or more of the following four points:

(1) Evaluate whether the proposed collection of information is necessary for the proper performance of the functions of the agency, including whether the information will have practical utility;

(2) Evaluate the accuracy of the agency's estimate of the burden of the proposed collection of information,

including the validity of the methodology and assumptions used;

(3) Enhance the quality, utility, and clarity of the information to be collected; and

(4) Minimize the burden of the collection of information on those who are to respond, including through the use of appropriate automated, electronic, mechanical, or other technological collection techniques or other forms of information technology, *e.g.,* permitting electronic submission of responses.

Overview of This Information Collection

(1) *Type of Information Collection:* New Collection.

(2) *Title of the Form/Collection:* Petition for Nonimmigrant Worker: E or TN Classifications; Petition for Nonimmigrant Worker: L Classifications; Petition for Nonimmigrant Worker: H–3, P, Q, or R Classifications; Petition for Nonimmigrant Worker: O Classifications.

(3) *Agency form number, if any, and the applicable component of the DHS sponsoring the collection:* I–129E&TN; I–129L; I–129MISC; I–129O; USCIS.

(4) *Affected public who will be asked or required to respond, as well as a brief abstract:* Primary: Business or other for-profit. USCIS will use the data collected on Form I–129E&TN to determine eligibility for the requested nonimmigrant classification and/or requests to extend or change nonimmigrant status. An employer may use this form to apply to USCIS for an employee to temporarily enter the United States and work as a TN nonimmigrant. A treaty trader, treaty investor, CNMI investor, employer, or applicant also uses this form to request an extension of stay in one of these classifications for an employee or for themselves, or to change the status of an employee currently in the United States as a nonimmigrant, or their own status if they are currently in the United States as a nonimmigrant, to E–1, E–2, E–2C, E–3, or TN. An employer also uses this form to request an extension of stay in E–3 classification for an employee, or to change the status of an employee currently in the United States to an E–3 nonimmigrant. An employee also uses this form to request an extension of stay in E–3 classification for themselves, or to change their own status to an E–3 nonimmigrant if they are currently in the United States in a nonimmigrant status.

USCIS will use the data collected on Form I–129L to determine a noncitizen's eligibility for L–1A and L–1B classification. The form is also used to determine whether, in advance of filing the individual L–1 petition, certain petitioning companies or organizations have established the required intracompany relationship for an LZ Blanket petition. An employer uses this form to petition USCIS for the noncitizen to temporarily enter the United States as a nonimmigrant. An employer also uses this form to request an extension of stay or change of status on behalf of the noncitizen. The form standardizes these requests and ensures that the information required for assessing eligibility is provided by the petitioner about itself and the noncitizen.

USCIS will use the data collected on Form I–129MISC to determine eligibility for the requested nonimmigrant classification and/or requests to extend or change nonimmigrant status. An employer (or agent or sponsor, where applicable) uses this form to petition USCIS for a noncitizen to temporarily enter as an H–3, P, Q, or R nonimmigrant. An employer (or agent or sponsor, where applicable) also uses this form to request an extension of stay of an H–3, P, Q, or R nonimmigrant worker or to change the status of a noncitizen currently in the United States as a nonimmigrant to H–3, P, Q, or R. The form standardizes requests for H–3, P, Q, or R nonimmigrant workers and ensures that basic information required for assessing eligibility is provided by the petitioner.

USCIS will use the data collected on Form I–129O to determine eligibility for the requested nonimmigrant classification and/or requests to extend or change nonimmigrant status. An employer or agent uses this form to petition USCIS for a noncitizen to temporarily enter as an O nonimmigrant. An employer or agent also uses this form to request an extension of stay of an O nonimmigrant worker or to change the status of a noncitizen currently in the United States in another nonimmigrant classification to O.

These forms also serve the purpose of standardizing petitions or applications filed for these various nonimmigrant classifications and ensuring that basic information required for assessing eligibility is provided by the petitioner or applicant. They also assist USCIS in compiling information required by Congress annually to assess effectiveness and utilization of certain nonimmigrant classifications.

(5) *An estimate of the total number of respondents and the amount of time estimated for an average respondent to respond:* The estimated total number of respondents for the information collection Form I–129E&TN is 12,709 and the estimated hour burden per response is 3 hours; the estimated total number of respondents for the information collection E–1/E–2 Classification Supplement to Form I–129E&TN is 3,573 and the estimated hour burden per response is 1.75 hours; the estimated total number of respondents for the information collection E–3 Classification Supplement to Form I–129E&TN is 1,787 and the estimated hour burden per response is 1 hour; the estimated total number of respondents for the information collection USMCA Supplement to Form I–129E&TN is 7,349 and the estimated hour burden per response is 0.5 hours.

The estimated total number of respondents for the information collection Form I–129L is 42,871 and the estimated hour burden per response is 3 hours.

The estimated total number of respondents for the information collection Form I–129MISC is 28,799 and the estimated hour burden per response is 3 hours; the estimated total number of respondents for the information collection H–3 Classification Supplement to Form I–129MISC is 1,449 and the estimated hour burden per response is 0.25 hours; the estimated total number of respondents for the information collection P Classification Supplement to Form I–129MISC is 18,524 and the estimated hour burden per response is 0.5 hours; the estimated total number of respondents for the information collection Q–1 International Cultural Exchange Alien Supplement to Form I–129MISC is 295 and the estimated hour burden per response is 0.167 hours; the estimated total number of respondents for the information collection R–1 Classification Supplement to Form I–129MISC is 8,531 and the estimated hour burden per response is 1 hour; the estimated total number of respondents for the information collection Attachment 1—Additional Beneficiary for Form I–129MISC is 6,491 and the estimated hour burden per response is 0.5 hours.

The estimated total number of respondents for the information collection Form I–129O is 25,516 and the estimated hour burden per response is 3 hours; the estimated total number of respondents for the information collection Attachment 1—Additional Beneficiary for Form I–129O is 1,189 and the estimated hour burden per response is 0.5 hours.

(6) *An estimate of the total public burden (in hours) associated with the*

collection: The total estimated annual hour burden associated with this collection is 363,444 hours.

(7) *An estimate of the total public burden (in cost) associated with the collection:* The estimated total annual cost burden associated with this collection of information is $56,595,925.00.

Dated: February 9, 2022.

Samantha L. Deshommes,

Chief, Regulatory Coordination Division, Office of Policy and Strategy, U.S. Citizenship and Immigration Services, Department of Homeland Security.

[FR Doc. 2022–03161 Filed 2–14–22; 8:45 am]

BILLING CODE 9111–97–P

DEPARTMENT OF HOMELAND SECURITY

U.S. Citizenship and Immigration Services

[OMB Control Number 1615–NEW]

Agency Information Collection Activities; New Collection: Petition for Nonimmigrant Worker: H–2A Classification and Petition for Nonimmigrant Worker: H–2B Classification

AGENCY: U.S. Citizenship and Immigration Services, Department of Homeland Security.

ACTION: 30-Day notice.

SUMMARY: The Department of Homeland Security (DHS), U.S. Citizenship and Immigration Services (USCIS) will be submitting the following information collection request to the Office of Management and Budget (OMB) for review and clearance in accordance with the Paperwork Reduction Act of 1995. The purpose of this notice is to allow an additional 30 days for public comments.

DATES: Comments are encouraged and will be accepted until March 17, 2022.

ADDRESSES: Written comments and/or suggestions regarding the item(s) contained in this notice, especially regarding the estimated public burden and associated response time, must be submitted via the Federal eRulemaking Portal website at *http://www.regulations.gov* under e-Docket ID number USCIS–2021–0017. All submissions received must include the OMB Control Number 1615–NEW in the body of the letter, the agency name and Docket ID USCIS–2021–0017.

FOR FURTHER INFORMATION CONTACT: USCIS, Office of Policy and Strategy, Regulatory Coordination Division, Samantha Deshommes, Chief, Telephone number (240) 721–3000 (This is not a toll-free number; comments are not accepted via telephone message.). Please note contact information provided here is solely for questions regarding this notice. It is not for individual case status inquiries. Applicants seeking information about the status of their individual cases can check Case Status Online, available at the USCIS website at *http://www.uscis.gov,* or call the USCIS Contact Center at (800) 375–5283; TTY (800) 767–1833.

SUPPLEMENTARY INFORMATION:

Comments

The information collection notice was previously published in the **Federal Register** on August 18, 2021, at 86 FR 46260 allowing for a 60-day public comment period. USCIS received fourteen comments in connection with the 60-day notice. USCIS made edits to the I–129H2A and I–129H2B Forms and Instructions in response to comments.

You may access the information collection instrument with instructions, or additional information by visiting the Federal eRulemaking Portal site at: *http://www.regulations.gov* and enter USCIS–2021–0017 in the search box. The comments submitted to USCIS via this method are visible to the Office of Management and Budget and comply with the requirements of 5 CFR 1320.12(c). All submissions will be posted, without change, to the Federal eRulemaking Portal at *http://www.regulations.gov,* and will include any personal information you provide. Therefore, submitting this information makes it public. You may wish to consider limiting the amount of personal information that you provide in any voluntary submission you make to DHS. DHS may withhold information provided in comments from public viewing that it determines may impact the privacy of an individual or is offensive. For additional information, please read the Privacy Act notice that is available via the link in the footer of *http://www.regulations.gov.*

Written comments and suggestions from the public and affected agencies should address one or more of the following four points:

(1) Evaluate whether the proposed collection of information is necessary for the proper performance of the functions of the agency, including whether the information will have practical utility;

(2) Evaluate the accuracy of the agency's estimate of the burden of the proposed collection of information, including the validity of the methodology and assumptions used

(3) Enhance the quality, utility, and clarity of the information to be collected; and

(4) Minimize the burden of the collection of information on those who are to respond, including through the use of appropriate automated, electronic, mechanical, or other technological collection techniques or other forms of information technology, *e.g.,* permitting electronic submission of responses.

Overview of This Information Collection

(1) *Type of Information Collection:* New Collection.

(2) *Title of the Form/Collection:* Petition for a Nonimmigrant Worker: H–2A Classification and Petition for a Nonimmigrant Worker: H–2B Classification.

(3) *Agency form number, if any, and the applicable component of the DHS sponsoring the collection:* I–129H2A; I–129H2B; USCIS.

(4) *Affected public who will be asked or required to respond, as well as a brief abstract:* Primary: Business or other for-profit. USCIS will use the data collected on Form I–129H2A to determine eligibility for the requested H–2A nonimmigrant petition and/or requests to extend or change nonimmigrant status. An employer or agent uses this form to petition USCIS for a noncitizen to temporarily enter as an H–2A nonimmigrant. An employer or agent also uses this form to request an extension of stay or change of status on behalf of the noncitizen worker.

USCIS will use the data collected on Form I–129H2B to determine eligibility for the requested H–2B nonimmigrant petition and/or requests to extend or change nonimmigrant status. An employer or agent uses this form to petition USCIS for a noncitizen to temporarily enter as an H–2B nonimmigrant. An employer or agent also uses this form to request an extension of stay or change of status on behalf of the noncitizen worker.

Both forms serve the purpose of standardizing requests for nonimmigrant workers in the H–2A and H–2B classifications and ensuring that basic information required for assessing eligibility is provided by the petitioner. They also assist USCIS in compiling information required by Congress annually to assess effectiveness and utilization of certain nonimmigrant classifications.

(5) *An estimate of the total number of respondents and the amount of time estimated for an average respondent to respond:* The estimated total number of respondents for the information

collection Form I–129H2A is 12,008 and the estimated hour burden per response is 3 hours; the estimated total number of respondents for the information collection Form I–129H2A Named Worker Attachment is 2,740 with 24 responses per respondent and the estimated hour burden per response is 0.5 hours; the estimated total number of respondents for the information collection Form I–129H2A Joint Employer Supplement is 5,000 and the estimated hour burden per response is 0.167 hours; the estimated total number of respondents for the information collection Form I–129H2B is 6,340 and the estimated hour burden per response is 3 hours; the estimated total number of respondents for the information collection Form I–129H2B Named Worker Attachment is 2,421 with 24 responses per respondent and the estimated hour burden per response is 0.5 hours.

(6) *An estimate of the total public burden (in hours) associated with the collection:* The total estimated annual hour burden associated with this collection is 117,811 hours.

(7) *An estimate of the total public burden (in cost) associated with the collection:* The estimated total annual cost burden associated with this collection of information is $12,024,220.

Dated: February 9, 2022.

Samantha L. Deshommes,

Chief, Regulatory Coordination Division, Office of Policy and Strategy, U.S. Citizenship and Immigration Services, Department of Homeland Security.

[FR Doc. 2022–03162 Filed 2–14–22; 8:45 am]

BILLING CODE 9111–97–P

DEPARTMENT OF HOMELAND SECURITY

U.S. Citizenship and Immigration Services

[OMB Control Number 1615–0056]

Agency Information Collection Activities; Extension, Without Change, of a Currently Approved Collection: Application To Preserve Residence for Naturalization

AGENCY: U.S. Citizenship and Immigration Services, Department of Homeland Security.

ACTION: 60-Day notice.

SUMMARY: The Department of Homeland Security (DHS), U.S. Citizenship and Immigration Services (USCIS) invites the general public and other Federal agencies to comment upon this proposed extension of a currently approved collection of information. In accordance with the Paperwork Reduction Act (PRA) of 1995, the information collection notice is published in the **Federal Register** to obtain comments regarding the nature of the information collection, the categories of respondents, the estimated burden (*i.e.* the time, effort, and resources used by the respondents to respond), the estimated cost to the respondent, and the actual information collection instruments.

DATES: Comments are encouraged and will be accepted for 60 days until April 18, 2022.

ADDRESSES: All submissions received must include the OMB Control Number 1615–0056 in the body of the letter, the agency name and Docket ID USCIS–2006–0030. Submit comments via the Federal eRulemaking Portal website at *https://www.regulations.gov* under e-Docket ID number USCIS–2006–0030.

FOR FURTHER INFORMATION CONTACT: USCIS, Office of Policy and Strategy, Regulatory Coordination Division, Samantha Deshommes, Chief, telephone number (240) 721–3000 (This is not a toll-free number. Comments are not accepted via telephone message). Please note contact information provided here is solely for questions regarding this notice. It is not for individual case status inquiries. Applicants seeking information about the status of their individual cases can check Case Status Online, available at the USCIS website at *https://www.uscis.gov,* or call the USCIS Contact Center at 800–375–5283 (TTY 800–767–1833).

SUPPLEMENTARY INFORMATION:

Comments

You may access the information collection instrument with instructions or additional information by visiting the Federal eRulemaking Portal site at: *https://www.regulations.gov* and entering USCIS–2006–0030 in the search box. All submissions will be posted, without change, to the Federal eRulemaking Portal at *https://www.regulations.gov,* and will include any personal information you provide. Therefore, submitting this information makes it public. You may wish to consider limiting the amount of personal information that you provide in any voluntary submission you make to DHS. DHS may withhold information provided in comments from public viewing that it determines may impact the privacy of an individual or is offensive. For additional information, please read the Privacy Act notice that is available via the link in the footer of *https://www.regulations.gov.*

Written comments and suggestions from the public and affected agencies should address one or more of the following four points:

(1) Evaluate whether the proposed collection of information is necessary for the proper performance of the functions of the agency, including whether the information will have practical utility;

(2) Evaluate the accuracy of the agency's estimate of the burden of the proposed collection of information, including the validity of the methodology and assumptions used;

(3) Enhance the quality, utility, and clarity of the information to be collected; and

(4) Minimize the burden of the collection of information on those who are to respond, including through the use of appropriate automated, electronic, mechanical, or other technological collection techniques or other forms of information technology, *e.g.,* permitting electronic submission of responses.

Overview of This Information Collection

(1) *Type of Information Collection:* Extension, Without Change, of a Currently Approved Collection.

(2) *Title of the Form/Collection:* Application to Preserve Residence for Naturalization.

(3) *Agency form number, if any, and the applicable component of the DHS sponsoring the collection:* Form N–470; USCIS.

(4) *Affected public who will be asked or required to respond, as well as a brief abstract:* Primary: Individuals or households. The information collected on Form N–470 will be used to determine whether an alien who intends to be absent from the United States for a period of one year or more is eligible to preserve residence for naturalization purposes.

(5) *An estimate of the total number of respondents and the amount of time estimated for an average respondent to respond:* The estimated total number of respondents for the information collection N–470 is 120 and the estimated hour burden per response is 0.6 hours.

(6) *An estimate of the total public burden (in hours) associated with the collection:* The total estimated annual hour burden associated with this collection is 72 hours.

(7) *An estimate of the total public burden (in cost) associated with the collection:* The estimated total annual cost burden associated with this collection of information is $14,700.

Dated: February 9, 2022.

Samantha L. Deshommes,

Chief, Regulatory Coordination Division, Office of Policy and Strategy, U.S. Citizenship and Immigration Services, Department of Homeland Security.

[FR Doc. 2022–03160 Filed 2–14–22; 8:45 am]

BILLING CODE 9111–97–P

DEPARTMENT OF HOUSING AND URBAN DEVELOPMENT

[Docket No. FR–7050–N–06; OMB Control No: 2528–0259]

30-Day Notice of Proposed Information Collection: Family Options 12 Year Study: Tracking and Reengagement Data Collection

AGENCY: Office of Policy Development and Research, Chief Data Officer, HUD.

ACTION: Notice.

SUMMARY: HUD is seeking approval from the Office of Management and Budget (OMB) for the information collection described below. In accordance with the Paperwork Reduction Act, HUD is requesting comment from all interested parties on the proposed collection of information. The purpose of this notice is to allow for 30 days of public comment.

DATES: *Comments Due Date: March 17, 2022.*

ADDRESSES: Interested persons are invited to submit comments regarding this proposal. Written comments and recommendations for the proposed information collection should be sent within 30 days of publication of this notice to *OIRA_submission@omb.eop.gov* or *www.reginfo.gov/public/do/PRAMain.* Find this particular information collection by selecting ''Currently under 30-day Review—Open for Public Comments'' or by using the search function.

FOR FURTHER INFORMATION CONTACT: Anna P. Guido, Reports Management Officer, QMAC, Department of Housing and Urban Development, 451 7th Street SW, Washington, DC 20410; email her at *Anna.P.Guido@hud.gov* or telephone 202–402–5535. This is not a toll-free number. Copies of available documents submitted to OMB may be obtained from Ms. Guido.

SUPPLEMENTARY INFORMATION: This notice informs the public that HUD is seeking approval from OMB for the information collection described in Section A.

The **Federal Register** notice that solicited public comment on the information collection for a period of 60 days was published on January 11, 2021 at 86 FR 1993.

A. Overview of Information Collection

Title of Information Collection: Family Options 12 Year Study: Tracking and Reengagement Data Collection.

OMB Approval Number: 2528–0259.

Type of Request: Reinstatement with change of a previously approved collections.

Form Number: NA.

Description of the need for the information and proposed use: The purpose of this proposed information collection is to locate the families that enrolled in the U.S. Department of Housing and Urban Development's (HUD) Family Options Study between September 2010 and January 2012 and to update their current contact information.

The Family Options Study is a multi-site experiment designed to test the impacts of different housing and service interventions on homeless families in five key domains: Housing stability, family preservation, adult well-being, child well-being, and self-sufficiency. Both the design and the scale of the study provides a strong basis for conclusions about the relative impacts of the interventions over time, and data collected at two previous points in time, twenty (20) months after random assignment and thirty-seven (37) months after random assignment, yielded powerful evidence regarding the positive impact of providing a non-time-limited housing subsidy to a family experiencing homelessness. It is possible, though, that some effects of the various interventions might change over time or take longer to emerge, particularly for child well-being. Therefore, HUD plans to conduct a follow-up survey of study families roughly eleven years after enrollment into the study. Locating, reengaging, and updating the contact information for study families will be critical to supporting a healthy response rate for the planned 11-year follow-up survey.

This **Federal Register** Notice provides an opportunity to comment on the Participant Update Contact Form that will be used to reengage with study families and gather updated contact information.

ANNUALIZED BURDEN TABLE

Information collection	Number of respondents	Frequency of response	Responses per annum	Burden hour per response	Annual burden hours	Hourly cost per response	Cost
Welcome Back Newsletter and Participant Contact Update Form	2,241	1	2,241	.08	179	$10.15	$1,819.69
12 Year Tracking Survey	2,241	1	2,241	.25	560	10.15	5,686.54
Information Release Form	1,272	1	1,272	.08	102	10.15	1,032.86
Total	5,754				841		8,539.09

B. Solicitation of Public Comment

This notice is soliciting comments from members of the public and affected parties concerning the collection of information described in Section A on the following:

(1) Whether the proposed collection of information is necessary for the proper performance of the functions of the agency, including whether the information will have practical utility;

(2) If the information will be processed and used in a timely manner;

(3) The accuracy of the agency's estimate of the burden of the proposed collection of information;

(4) Ways to enhance the quality, utility, and clarity of the information to be collected; and

(5) Ways to minimize the burden of the collection of information on those who are to respond; including through the use of appropriate automated collection techniques or other forms of information technology, *e.g.,* permitting electronic submission of responses.

HUD encourages interested parties to submit comment in response to these questions.

C. Authority

Section 3507 of the Paperwork Reduction Act of 1995, 44 U.S.C. Chapter 35.

Anna P. Guido,

Department Reports Management Officer, Office of the Chief Information Officer.

[FR Doc. 2022–03179 Filed 2–14–22; 8:45 am]

BILLING CODE 4210–67–P

DEPARTMENT OF HOUSING AND URBAN DEVELOPMENT

[Docket No. FR–7050–N–07]

30-Day Notice of Proposed Information Collection: At-Risk/Receivership/Receivership/Substandard/Troubled Program; OMB Control No.: 2577–New

AGENCY: Office of Policy Development and Research, Chief Data Officer, HUD.

ACTION: Notice.

SUMMARY: HUD is seeking approval from the Office of Management and Budget (OMB) for the information collection described below. In accordance with the Paperwork Reduction Act, HUD is requesting comment from all interested parties on the proposed collection of information. The purpose of this notice is to allow for an additional 30 days of public comment.

DATES: *Comments Due Date:* March 17, 2022.

ADDRESSES: Interested persons are invited to submit comments regarding this proposal. Written comments and recommendations for the proposed information collection should be sent within 30 days of publication of this notice to *OIRA_submission@omb.eop.gov* or *www.reginfo.gov/public/do/PRAMain.* Find this particular information collection by selecting ''Currently under 30-day Review—Open for Public Comments'' or by using the search function.

FOR FURTHER INFORMATION CONTACT: Colette Pollard, Reports Management Officer, QDAM, Department of Housing and Urban Development, 451 7th Street SW, Washington, DC 20410; email Colette Pollard at *Colette.Pollard@hud.gov* or telephone 202–402–3400. This is not a toll-free number. Copies of available documents submitted to OMB may be obtained from Ms. Pollard.

SUPPLEMENTARY INFORMATION: This notice informs the public that HUD is seeking approval from OMB for the information collection described in Section A.

The **Federal Register** notice that solicited public comment on the information collection for a period of 60 days was published on November 30, 2021 at 86 FR 67968.

A. Overview of Information Collection

Title of Information Collection: At-Risk/Receivership/Receivership/Substandard/Troubled Program.

OMB Control Number: 2577–New.

Type of Request: New.

Agency Form Numbers: HUD–50075.1, HUD–50071.

Description of the Need for the Information and Proposed Use

The Transportation, Housing and Urban Development and Related Agencies Appropriations Act of 2021, approved on December 27, 2020, has an appropriation of fifteen (15) million dollars for Emergency Grants to improve the asset management condition of housing owned by public housing authorities (PHA) in Receivership, Troubled, Substandard or at Risk status. To be eligible for this funding, a PHAmust provide a narrative description of the physical needs and condition of the Asset Management Property (AMP); a plan with actions to address the issues at the AMP; and a projection of the impact of those actions on the AMP's performance.

Respondents: Public Housing Agencies.

Estimated Annual Reporting and Recordkeeping Burden: The estimated burden hours is 540 and the total annual cost is $21,774.

Information collection	Number of respondents	* Average number of responses per respondent	Total annual responses	Burden hours per response	Total hours	Hourly cost	Total annual cost
Narrative	100	1	100	6	600	$32.02	$19,212
Post-award Reports	10	1	10	8	80	32.02	2,562
Totals	110	1	110	varies	540	32.02	21,774

* Avg. number of responses per respondent = Total Annual Responses ÷ Number of Responses approval number cited or do not have a reportable burden.

B. Solicitation of Public Comment

This notice is soliciting comments from members of the pubic and affected parties concerning the collection of information described in Section A on the following:

(1) Whether the proposed collection of information is necessary for the proper performance of the functions of the agency, including whether the information will have practical utility;

(2) The accuracy of the agency's estimate of burden of the proposed collection of information;

(3) Ways to enhance the quality, utility and clarity of the information to be collected; and

(4) Ways to minimize the burden of the collection of information on those who are to respond; including through the use of appropriate automated collection techniques or other forms of information technology, *e.g.,* permitting electronic submission of responses.

(5) Ways to minimize the burden of the collection of information on those who are to respond, including the use of automated collection techniques or other forms of information technology.

HUD encourages interested parties to submit comments in response to these questions.

C. Authority

Section 3507 of the Paperwork Reduction Act of 1995, 44 U.S.C. chapter 35.

Colette Pollard,

Department Reports Management Officer, Office of the Chief Information Officer.

[FR Doc. 2022–03178 Filed 2–14–22; 8:45 am]

BILLING CODE 4210–67–P

DEPARTMENT OF HOUSING AND URBAN DEVELOPMENT

[Docket No. FR–7061–N–01; OMB Control No.: 2577–0243]

60-Day Notice of Proposed Information Collection: Inspector Candidate Assessment Questionnaire

AGENCY: Office of the Assistant Secretary for Public and Indian Housing, PIH, HUD.

ACTION: Notice.

SUMMARY: HUD is seeking approval from the Office of Management and Budget (OMB) for the information collection described below. In accordance with the Paperwork Reduction Act, HUD is requesting comment from all interested parties on the proposed collection of information. The purpose of this notice

is to allow for 60 days of public comment.

DATES: *Comments Due Date:* April 18, 2022.

ADDRESSES: Interested persons are invited to submit comments regarding this proposal. Comments should refer to the proposal by name and/or OMB Control Number and should be sent to: Colette Pollard, Reports Management Officer, QDAM, Department of Housing and Urban Development, 451 7th Street SW, Room 4176, Washington, DC 20410–5000; telephone 202–402–3400 (this is not a toll-free number) or email at *Colette.Pollard@hud.gov* for a copy of the proposed forms or other available information. Persons with hearing or speech impairments may access this number through TTY by calling the toll-free Federal Relay Service at (800) 877–8339.

FOR FURTHER INFORMATION CONTACT: Dawn Smith, Office of Policy, Programs and Legislative Initiatives, PIH, Department of Housing and Urban Development, 451 7th Street SW, Room 3178, Washington, DC 20410; telephone 202–402–4109, (this is not a toll-free number). Persons with hearing or speech impairments may access this number via TTY by calling the Federal Relay Service at (800) 877–8339. Copies of available documents submitted to OMB may be obtained from Ms. Rogers.

SUPPLEMENTARY INFORMATION: This notice informs the public that HUD is seeking approval from OMB for the information collection described in Section A.

A. Overview of Information Collection

Title of Proposal: Inspector Candidate Assessment Questionnaire.

OMB Approval Number: 2577–0243.

Type of Request: Reinstatement with change of a previously approved collection.

Form Number: Form HUD 50002A and Form HUD 50002B—HFA.

Description of the need for the information and proposed use: To meet the requirements of HUD's Uniform Physical Condition Standards (UPCS), the Physical Condition of Multifamily Properties and the Public Housing Assessment System (PHAS) regulations, the Department conducts physical condition inspections of approximately 14,000 multifamily and public housing properties annually. HUD uses contract inspectors that are trained and certified in the UPCS protocol by HUD to conduct UPCS inspections. Individuals who wish to be trained and certified UPCS by HUD are requested to electronically submit the questionnaire via the internet. The questionnaire provides HUD with basic knowledge of an individual's inspection skills and abilities.

As part of aligning REAC UPCS inspections with those conducted by state Housing Finance Agencies, state HFA staff also may fill out a form for information purposes only prior to attending the UPCS training.

Respondents: Applicants to the UPCS inspector certification program and state HFA staff.

Information collection	Number of respondents	Frequency of response	Responses per annum	Burden hour per response	Annual burden hours	Hourly cost per response	Annual cost
HUD 50002A	200	1	200	0.33	66	$34.86	$2,300.76
HUD 50002B–FHA	35	1	35	0.25	9	34.86	313.74
Total Burden			235	1	75		2,614.50

B. Solicitation of Public Comment

This notice is soliciting comments from members of the public and affected parties concerning the collection of information described in Section A on the following:

(1) Whether the proposed collection of information is necessary for the proper performance of the functions of the agency, including whether the information will have practical utility;

(2) The accuracy of the agency's estimate of the burden of the proposed collection of information;

(3) Ways to enhance the quality, utility, and clarity of the information to be collected; and

(4) Ways to minimize the burden of the collection of information on those who are to respond; including through the use of appropriate automated collection techniques or other forms of information technology, *e.g.,* permitting electronic submission of responses.

HUD encourages interested parties to submit comment in response to these questions.

C. Authority

Section 3507 of the Paperwork Reduction Act of 1995, 44 U.S.C. Chapter 35.

Laura Miller-Pittman,

Chief, Office of Policy, Programs and Legislative Initiatives.

[FR Doc. 2022–03176 Filed 2–14–22; 8:45 am]

BILLING CODE 4210–67–P

INTERNATIONAL TRADE COMMISSION

[Investigation No. 337–TA–1209]

Certain Movable Barrier Operator Systems and Components Thereof; Notice of Commission Final Determination Finding a Violation of Section 337; Issuance of a Limited Exclusion Order and a Cease and Desist Order; Termination of the Investigation

AGENCY: U.S. International Trade Commission.

ACTION: Notice.

SUMMARY: Notice is hereby given that the U.S. International Trade Commission has found a violation of section 337 of the Tariff Act of 1930, as amended, in the above-captioned investigation. The Commission has issued a limited exclusion order (''LEO'') prohibiting the importation of certain movable barrier operator systems and components thereof that are imported by or on behalf of The Chamberlain Group, Inc. of Oak Brook, Illinois (''Respondent''), and that infringe claims 1, 4, 16, and 19 of U.S. Patent No. 9,483,935 (''the '935 patent''); claims 18 and 24 of U.S. Patent No. 7,956,718 (''the '718 patent'') and claim 17 of U.S. Patent No. 8,410,895 (''the '895 patent''). The Commission has also issued a cease and desist order (''CDO'') against Respondent. The investigation is terminated.

FOR FURTHER INFORMATION CONTACT: Houda Morad, Office of the General Counsel, U.S. International Trade Commission, 500 E Street SW, Washington, DC 20436, telephone (202) 708–4716. Copies of non-confidential documents filed in connection with this investigation may be viewed on the Commission's electronic docket (EDIS) at *https://edis.usitc.gov.* For help accessing EDIS, please email *EDIS3Help@usitc.gov.* General information concerning the Commission may also be obtained by accessing its

internet server at *https://www.usitc.gov.* Hearing-impaired persons are advised that information on this matter can be obtained by contacting the Commission's TDD terminal on (202) 205–1810.

SUPPLEMENTARY INFORMATION: On August 10, 2020, the Commission instituted this investigation under section 337 of the Tariff Act of 1930, as amended, 19 U.S.C. 1337 (''section 337''), based on a complaint filed by Overhead Door Corporation of Lewisville, Texas and GMI Holdings Inc. of Mount Hope, Ohio (collectively, ''Complainants''). *See* 85 FR 48264–65 (Aug. 10, 2020). The complaint, as supplemented, alleges a violation of section 337 based upon the importation into the United States, the sale for importation, and the sale within the United States after importation of certain movable barrier operator systems and components thereof by reason of infringement of U.S. Patent Nos. 8,970,345 (''the '345 patent''); 7,173,516 (''the '516 patent''); 7,180,260 (''the '260 patent''); the '935 patent; the '718 patent; and the '895 patent. *See id.* The notice of investigation names The Chamberlain Group, Inc. of Oak Brook, Illinois as the respondent in this investigation. *See id.* The Office of Unfair Import Investigations is not a party to the investigation. *See id.*

On February 10, 2021, the Commission terminated the investigation as to the '516 patent based on the withdrawal of the allegations in the complaint as to that patent. *See* Order No. 10 (Jan. 19, 2021), *unreviewed by* Comm'n Notice (Feb. 10, 2021).

On May 26, 2021, Commission determined not to review an initial determination granting Complainants' motion for summary determination that the economic prong of the domestic industry requirement is satisfied. *See* Order No. 12 (April 26, 2021), *unreviewed by* Comm'n Notice (May 26, 2021).

On September 14, 2021, the presiding Administrative Law Judge (''ALJ'') issued a final initial determination (''FID'') finding a violation of section 337 based on the infringement by Respondent of all of Complainants' asserted patent claims. Specifically, the FID finds that: (1) The asserted patent claims are all infringed by Respondent's accused products and redesigned products; (2) the domestic industry products practice the asserted patents; and (3) the asserted patents are not invalid under 35 U.S.C. 101, 102, or 103. The ALJ also issued a recommended determination (''RD'') recommending, should the Commission find a violation of section 337, that the Commission issue: (1) A limited exclusion order against certain movable barrier operator systems and components thereof that are imported into the United States, sold for importation, and sold within the United States after importation, by the Respondent; and (2) a cease and desist order against the Respondent. The RD also recommends that the Commission set a bond during the period of Presidential review in an amount of 100 percent of the entered value of the movable barrier operator systems imported by or on behalf of the Respondent.

On October 14, 2021, the parties filed statements on the public interest pursuant to Commission Rule 210.50, 19 CFR 210.50. Between October 20, 2021, and November 3, 2021, members of the public filed written submissions in response to the **Federal Register** notice requesting public interest comments. *See* 86 FR 56982–83 (Oct. 13, 2021).

On December 6, 2021, the Commission issued a notice determining to review the FID in part (''the WTR Notice''). *See* 86 FR 70527–29 (Dec. 10, 2021). The WTR Notice also requested written submissions from the parties on the issues under review, and from the parties, interested government agencies, and any other interested parties on issues of remedy, the public interest, and bonding. *See id.*

On December 13, 2021, the parties filed written submissions in response to the WTR Notice, and on December 20, 2020, the parties filed responses to each other's submissions. On December 13, 2021, members of the public filed written submissions concerning the public interest in response to the WTR Notice.

Having examined the record of this investigation, including the FID, the RD, and the parties' and non-parties' submissions, the Commission has determined to affirm with modification the FID's determination of a violation of section 337 with respect to claims 1, 4, 16, and 19 of the '935 patent; claims 18 and 24 of the '718 patent; and claim 17 of the '895 patent. The Commission reverses and finds no violation as to the asserted claims of the '345 and '260 patents. Specifically, as explained in the Commission Opinion filed concurrently herewith, the Commission has determined to: (1) Affirm with modification the FID's infringement findings as to the asserted claims of the '935 patent; (2) reverse the FID's infringement findings as to the asserted claims of the '345 patent; (3) affirm with modification the FID's validity findings as to the asserted claims of the '935 and '345 patents over Keller (RX–44); (4) reverse the FID's infringement findings as to the asserted claims of the '260 patent; (5) vacate and take no position as to the FID's finding that the asserted claims of the '260 patent are patent-eligible under 35 U.S.C. 101; (6) affirm with modification the FID's infringement findings as to the asserted claims of the '718 and '895 patents; and (7) affirm with modification the FID's finding that the asserted claims of the '718 and '895 patents are patent-eligible under 35 U.S.C. 101.

All findings in the FID that are not inconsistent with the Commission's determination are affirmed.

The Commission has determined that the appropriate remedy is an LEO against Respondent's infringing products and a CDO against Respondent. The Commission has also determined that the public interest factors enumerated in subsection 337(d)(1) and (f)(1) (19 U.S.C. 1337(d)(1), (f)(1)) do not preclude the issuance of the LEO and CDO. The Commission has further determined to set a bond during the period of Presidential review in the amount of 100 percent of the entered value of Respondent's infringing products (19 U.S.C. 1337(j)).

The Commission's orders and opinion were delivered to the President and to the United States Trade Representative on the day of their issuance.

The Commission's vote for this determination took place on February 9, 2022.

The authority for the Commission's determination is contained in section 337 of the Tariff Act of 1930, as amended (19 U.S.C. 1337), and in Part 210 of the Commission's Rules of Practice and Procedure (19 CFR part 210).

By order of the Commission.

Issued: February 9, 2022.

Lisa Barton,

Secretary to the Commission.

[FR Doc. 2022–03167 Filed 2–14–22; 8:45 am]

BILLING CODE 7020–02–P

DEPARTMENT OF JUSTICE

[OMB Number 1105–0030]

Agency Information Collection Activities; Proposed eCollection eComments Requested; Extension of a Previously Approved Collection; Comments Requested; Electronic Applications for the Attorney General's Honors Program and the Summer Law Intern Program

AGENCY: Office of Attorney Recruitment and Management, Department of Justice.

ACTION: 30-Day notice.

SUMMARY: The Department of Justice (DOJ), Justice Management Division, Office of Attorney Recruitment and Management (OARM), will be submitting the following information collection request to the Office of Management and Budget (OMB) for review and approval in accordance with the Paperwork Reduction Act of 1995.

DATES: The Department of Justice encourages public comment and will accept input until March 17, 2022.

FOR FURTHER INFORMATION CONTACT: Written comments and recommendations for the proposed information collection should be sent within 30 days of publication of this notice to *www.reginfo.gov/public/do/PRAMain.* Find this particular information collection by selecting ''Currently under 30-day Review—Open for Public Comments'' or by using the search function.

SUPPLEMENTARY INFORMATION: Written comments and/or suggestions from the public and affected agencies concerning the proposed collection of information are encouraged. Your comments should address one or more of the following four points:

(1) Evaluate whether the proposed collection of information is necessary for the proper performance of the functions of the Office of Attorney Recruitment and Management, including whether the information will have practical utility;

(2) Evaluate the accuracy of the agencies estimate of the burden of the proposed collection of information, including the validity of the methodology and assumptions used;

(3) Evaluate whether, and if so, how, the quality, utility, and clarity of the information to be collected can be enhanced; and

(4) Minimize the burden of the collection of information on those who are to respond, including through the use of appropriate automated, electronic, mechanical, or other technological collection techniques or other forms of information technology, *e.g.,* permitting electronic submission of responses.

Overview of This Information Collection

1. *Type of information collection:* Extension of a Currently Approved Collection.

2. *The title of the form/collection:* Electronic Applications for the Attorney General's Honors Program and Summer Law Intern Program.

3. *The agency form number, if any, and the applicable component of the department sponsoring the collection:* There is no agency form number for this collection. The applicable component within the Department of Justice is the Office of Attorney Recruitment and Management, Justice Management Division, U.S. Department of Justice.

4. *Affected public who will be asked or required to respond, as well as a brief abstract:* Primary: Individuals or households. Other: None. The application form is submitted voluntarily, once a year, by law students and recent law school graduates (*e.g.,* judicial law clerks) who will be in this applicant pool only once.

5. *An estimate of the total number of respondents and the amount of time estimated for an average respondent to respond/reply:* It is estimated that 3500 respondents will complete the application in approximately 1 hour per application. It is further estimated that it takes an average of an additional 45 minutes to review the instructions, search existing data sources, gather the data needed, and complete and review the application. In addition, an estimated 600 respondents (Honors Program candidates selected for interviews) will complete a Travel Survey/Interview Scheduling form used to schedule interviews and prepare official travel authorizations prior to the interviewees' performing pre-employment interview travel (as defined by 41 CFR Sec. 301–1.3), as needed, in approximately 10 minutes per form, plus an estimated 400 respondents who will complete a Reimbursement Form (if applicable) in order for the Department to prepare the travel vouchers required to reimburse candidates for authorized costs they incurred during pre-employment interview travel at approximately 10 minutes per form.

6. *An estimate of the total public burden (in hours) associated with the collection:* The estimated revised total annual public burden associated with this application is 6292 hours.

If additional information is required, please contact: Melody Braswell, Department Clearance Officer, U.S. Department of Justice, Justice Management Division, Policy and Planning Staff, Two Constitution Square, 145 N Street NE, Room 3E.405B, Washington, DC 20530.

Dated: February 9, 2022.

Melody Braswell,

Department Clearance Officer for PRA, U.S. Department of Justice.

[FR Doc. 2022–03150 Filed 2–14–22; 8:45 am]

BILLING CODE 4410–PB–P

DEPARTMENT OF JUSTICE

[OMB Number 1121–NEW]

Agency Information Collection Activities; Proposed Collection Comments Requested; New Collection: National Pretrial Reporting Program (NPRP)

AGENCY: Bureau of Justice Statistics, Department of Justice.

ACTION: 60-Day notice.

SUMMARY: The Department of Justice (DOJ), Office of Justice Programs, Bureau of Justice Statistics (BJS), will be submitting the following information collection request to the Office of Management and Budget (OMB) for review and approval in accordance with the Paperwork Reduction Act of 1995.

DATES: Comments are encouraged and will be accepted for 60 days until April 18, 2022.

FOR FURTHER INFORMATION CONTACT: If you have additional comments especially on the estimated public burden or associated response time, suggestions, or need a copy of the proposed information collection instrument with instructions or additional information, please contact Erica Grasmick, Statistician, Prosecution and Judicial Statistics Unit, Bureau of Justice Statistics, 810 Seventh Street NW, Washington, DC 20531 (email: *Erica.Grasmick@usdoj.gov;* telephone: 202–307–1402).

SUPPLEMENTARY INFORMATION: Written comments and suggestions from the public and affected agencies concerning the proposed collection of information are encouraged. Your comments should address one or more of the following four points:

—Evaluate whether the proposed collection of information is necessary for the proper performance of the functions of the Bureau of Justice Statistics, including whether the information will have practical utility;

—Evaluate the accuracy of the agency's estimate of the burden of the proposed collection of information, including the validity of the methodology and assumptions used;

—Evaluate whether and if so how the quality, utility, and clarity of the information to be collected can be enhanced; and

—Minimize the burden of the collection of information on those who are to respond, including through the use of appropriate automated, electronic, mechanical, or other technological collection techniques or other forms of information technology, *e.g.,*

permitting electronic submission of responses.

Overview of This Information Collection

(1) *Type of Information Collection:* New collection.

(2) *The Title of the Form/Collection:* The National Pretrial Reporting Program (NPRP).

(3) *The agency form number, if any, and the applicable component of the Department sponsoring the collection:* The Data Extraction Guide is NPRP–1. The applicable component within the Department of Justice is the Bureau of Justice Statistics, in the Office of Justice Programs.

(4) *Affected public who will be asked or required to respond, as well as a brief abstract:* Respondents will be local general jurisdiction courts, jails and pretrial services agencies or their information technology (IT) staff. Among other responsibilities, the Bureau of Justice Statistics is charged with collecting data regarding the prosecution of crimes by state and federal offices. The NPRP will focus on the pretrial phase of felony case processing in large counties. This effort will collect information from jails, pretrial services agencies and general jurisdiction courts by requesting data extracts associated with felony filings from case management systems. A total of 125 of the largest 200 counties in the U.S. will be sampled with the top 75 counties sampled with certainty.

BJS will request complete case-level records from the 125 sampled counties and connect data files within jurisdictions through defendant identifiers. The files will then be linked to defendant criminal histories for a comprehensive data file on pretrial release and detention. BJS is requesting that the extracts include all felony cases filed in 2019. BJS is also requesting that the extracts include arrest charges, defendant demographics, pretrial release decisions, pretrial misconduct, case disposition and sentencing. Local jails, pretrial services agencies and courts can provide the data extracts in any format.

(5) *An estimate of the total number of respondents and the amount of time estimated for an average respondent to respond:* BJS will send a data extraction guide to a total of 375 agencies within 125 jurisdictions (one court, one jail, and one pretrial service agency for each county). The expected burden placed on each agency is about 16 hours per agency for data extraction and 10 hours to explain any data inconsistencies or to answer questions of the data collection team.

(6) *An estimate of the total public burden (in hours) associated with the collection:* The total respondent burden is approximately 9,750 burden hours for the 375 agencies.

If additional information is required contact: Melody Braswell, Department Clearance Officer, United States Department of Justice, Justice Management Division, Policy and Planning Staff, Two Constitution Square, 145 N Street NE, 3E.405A, Washington, DC 20530.

Dated: February 9, 2022.

Melody Braswell,

Department Clearance Officer for PRA, U.S. Department of Justice.

[FR Doc. 2022–03149 Filed 2–14–22; 8:45 am]

BILLING CODE 4410–18–P

DEPARTMENT OF JUSTICE

[OMB Number 1105–0096]

Agency Information Collection Activities; Proposed eCollection eComments Requested; Extension With Change, of a Previously Approved Collection; Sequestered Juror Information Form

AGENCY: U.S. Marshals Service, Department of Justice.

ACTION: 30-Day notice.

SUMMARY: The Department of Justice (DOJ), U.S. Marshals Service (USMS), will submit the following information collection request to the Office of Management and Budget (OMB) for review and approval in accordance with the Paperwork Reduction Act of 1995.

DATES: Comments are encouraged and will be accepted for an additional 30 days until March 17, 2022.

FOR FURTHER INFORMATION CONTACT: Written comments and recommendations for the proposed information collection should be sent within 30 days of publication of this notice to *www.reginfo.gov/public/do/PRAMain.* Find this particular information collection by selecting ''Currently under 30-day Review—Open for Public Comments'' or by using the search function.

SUPPLEMENTARY INFORMATION: Written comments and suggestions from the public and affected agencies concerning the proposed collection of information are encouraged. Your comments should address one or more of the following four points:

—Evaluate whether the proposed collection of information is necessary for the proper performance of the functions of the agency, including whether the information will have practical utility;

—Evaluate the accuracy of the agency's estimate of the burden of the proposed collection of information, including the validity of the methodology and assumptions used;

—Evaluate whether and if so how the quality, utility, and clarity of the information to be collected can be enhanced; and

—Minimize the burden of the collection of information on those who are to respond, including through the use of appropriate automated, electronic, mechanical, or other technological collection techniques or other forms of information technology, *e.g.,* permitting electronic submission of responses.

Overview of This Information Collection

(1) *Type of Information Collection:* Extension with change of a currently approved collection.

(2) *The Title of the Form/Collection:* Sequestered Juror Information Form

(3) *The agency form number, if any, and the applicable component of the Department sponsoring the collection:*

Form number: Form USM–523A.

Component: U.S. Marshals Service, U.S. Department of Justice.

(4) *Affected public who will be asked or required to respond, as well as a brief abstract:*

Primary: Individuals or households.

Other: [None].

Abstract: The United States Marshals Service is responsible for ensuring the security of federal courthouses, courtrooms, and federal jurist. This information assists Marshals Service personnel in the planning of, and response to, potential security needs of the court and jurors during the course of proceedings. The authority for collecting the information on this form is 28 U.S.C. 509, 510 and 561 *et seq.*

(5) *An estimate of the total number of respondents and the amount of time estimated for an average respondent to respond:* An estimated 14 respondents will utilize the form, and it will take each respondent approximately 4 minutes to complete the form.

(6) *An estimate of the total public burden (in hours) associated with the collection:* The estimated annual public burden associated with this collection is 1 hour, which is equal to (14 (total # of annual responses) * 4 minutes = 56 minutes or 1 hour).

(7) *An Explanation of the Change in Estimates:* N/A.

If additional information is required contact: Melody Braswell, Department Clearance Officer, United States

Department of Justice, Justice Management Division, Policy and Planning Staff, Two Constitution Square, 145 N Street NE, 3E.405A, Washington, DC 20530.

Dated: February 9, 2022.

Melody Braswell,

Department Clearance Officer for PRA, U.S. Department of Justice.

[FR Doc. 2022–03151 Filed 2–14–22; 8:45 am]

BILLING CODE 4410–04–P

DEPARTMENT OF JUSTICE

[OMB Number 1121–0260]

Agency Information Collection Activities; Proposed eCollection eComments Requested; Reinstatement, Without Change, of a Previously Approved Collection for Which Approval Has Expired: 2022 Police Public Contact Survey (PPCS)

AGENCY: Bureau of Justice Statistics, Department of Justice.

ACTION: 30-Day notice.

SUMMARY: The Department of Justice (DOJ), Office of Justice Programs, Bureau of Justice Statistics, will be submitting the following information collection request to the Office of Management and Budget (OMB) for review and approval in accordance with the Paperwork Reduction Act of 1995. The proposed information collection was previously published in the **Federal Register**, allowing a 60-day comment period. Following publication of the 60-day notice, the Bureau of Justice Statistics received one set of comments containing suggestions for topics to add to the instrument, which are addressed in Supporting Statement Part A.

DATES: Comments are encouraged and will be accepted for an additional 30 days until March 17, 2022.

FOR FURTHER INFORMATION CONTACT: Written comments and recommendations for the proposed information collection should be sent within 30 days of publication of this notice to *www.reginfo.gov/public/do/PRAMain.* Find this particular information collection by selecting ''Currently under 30-day Review—Open for Public Comments'' or by using the search function.

SUPPLEMENTARY INFORMATION: Written comments and suggestions from the public and affected agencies concerning the proposed collection of information are encouraged. Your comments should address one or more of the following four points:

—Evaluate whether the proposed collection of information is necessary for the proper performance of the functions of the Bureau of Justice Statistics, including whether the information will have practical utility;

—Evaluate the accuracy of the agency's estimate of the burden of the proposed collection of information, including the validity of the methodology and assumptions used;

—Evaluate whether, and if so, how the quality, utility, and clarity of the information to be collected can be enhanced; and

—Minimize the burden of the collection of information on those who are to respond, including through the use of appropriate automated, electronic, mechanical, or other technological collection techniques or other forms of information technology, *e.g.,* permitting electronic submission of responses.

Overview of This Information Collection

1. *Type of Information Collection:* Reinstatement, without change, of a previously approved collection for which approval has expired.

2. *The Title of the Form/Collection:* 2022 Police Public Contact Survey.

3. *The agency form number, if any, and the applicable component of the Department sponsoring the collection:* The form number for the questionnaire is PPCS–1. The applicable component within the Department of Justice is the Bureau of Justice Statistics, in the Office of Justice Programs.

4. *Affected public who will be asked or required to respond, as well as a brief abstract:* Respondents will be persons 16 years or older living in households located throughout the United States sampled for the National Crime Victimization Survey (NCVS). The PPCS will be conducted as a supplement to the NCVS in all sample households for a six (6) month period. The PPCS is typically conducted periodically with the last administration occurring in 2020. The PPCS is one component of the BJS effort to fulfill the mandate set forth by the Violent Crime Control and Law Enforcement Act of 1994 to collect, evaluate, and publish data on the use of excessive force by law enforcement personnel. The goal of the collection is to report national statistics that provide a better understanding of the types, frequency, and outcomes of contacts between the police and the public, public perceptions of police behavior during the contact, and the conditions under which police force may be threatened or used. BJS plans to publish this information in reports and reference it when responding to queries from the U.S. Congress, Executive Office of the President, the U.S. Supreme Court, state officials, international organizations, researchers, students, the media, and others interested in criminal justice statistics.

5. *An estimate of the total number of respondents and the amount of time estimated for an average respondent to respond:* An estimate of the total number of respondents is 119,880 persons ages 16 and older. About 81.2% of PPCS respondents (97,343) will have no police contact and will complete the short interview with an average burden of four minutes. Among the 18.8% of respondents (22,537) who experienced police contact, the time to ask the detailed questions regarding the nature of the contact is estimated to take an average of 8 minutes. Respondents will be asked to respond to this survey only once during the six-month period. The burden estimates are based on data from the prior administration of the PPCS.

6. *An estimate of the total public burden (in hours) associated with the collection:* There are an estimated 9,495 total burden hours associated with this information collection.

If additional information is required contact: Melody Braswell, Department Clearance Officer, United States Department of Justice, Justice Management Division, Policy and Planning Staff, Two Constitution Square, 145 N Street NE, 3E.405A, Washington, DC 20530.

Melody Braswell,

Department Clearance Officer for PRA, U.S. Department of Justice.

[FR Doc. 2022–03148 Filed 2–14–22; 8:45 am]

BILLING CODE 4410–18–P

DEPARTMENT OF LABOR

Agency Information Collection Activities; Submission for OMB Review; Comment Request; General Working Conditions in Shipyard Employment Standard

ACTION: Notice of availability; request for comments.

SUMMARY: The Department of Labor (DOL) is submitting this Occupational Safety and Health Administration (OSHA)-sponsored information collection request (ICR) to the Office of Management and Budget (OMB) for review and approval in accordance with the Paperwork Reduction Act of 1995 (PRA). Public comments on the ICR are invited.

DATES: The OMB will consider all written comments that the agency receives on or before March 17, 2022.

ADDRESSES: Written comments and recommendations for the proposed information collection should be sent within 30 days of publication of this notice to *www.reginfo.gov/public/do/PRAMain.* Find this particular information collection by selecting ''Currently under 30-day Review—Open for Public Comments'' or by using the search function.

Comments are invited on: (1) Whether the collection of information is necessary for the proper performance of the functions of the Department, including whether the information will have practical utility; (2) if the information will be processed and used in a timely manner; (3) the accuracy of the agency's estimates of the burden and cost of the collection of information, including the validity of the methodology and assumptions used; (4) ways to enhance the quality, utility and clarity of the information collection; and (5) ways to minimize the burden of the collection of information on those who are to respond, including the use of automated collection techniques or other forms of information technology.

FOR FURTHER INFORMATION CONTACT: Nora Hernandez by telephone at 202–693–8633, or by email at *DOL_PRA_PUBLIC@dol.gov.*

SUPPLEMENTARY INFORMATION: In accordance with 29 CFR part 1915, subpart F, the standard on General Working Conditions in Shipyard Employment covers provisions that address conditions and operations in shipyard employment that may produce hazards for workers. The subpart is comprised of 14 sections that include housekeeping; lighting; utilities; working alone; vessel radar and communication systems; lifeboats; medical services and first aid; sanitation; control of hazardous energy; safety color code for marking physical hazards; accident prevention signs and tags; retention of DOT markings, placards, and labels; motor vehicle safety equipment, operation and maintenance; and servicing multi-piece and single-piece rim wheels. For additional substantive information about this ICR, see the related notice published in the **Federal Register** on November 1, 2021 (86 FR 60297).

This information collection is subject to the PRA. A Federal agency generally cannot conduct or sponsor a collection of information, and the public is generally not required to respond to an information collection, unless the OMB approves it and displays a currently valid OMB Control Number. In addition, notwithstanding any other provisions of law, no person shall generally be subject to penalty for failing to comply with a collection of information that does not display a valid OMB Control Number. *See* 5 CFR 1320.5(a) and 1320.6.

DOL seeks PRA authorization for this information collection for three (3) years. OMB authorization for an ICR cannot be for more than three (3) years without renewal. The DOL notes that information collection requirements submitted to the OMB for existing ICRs receive a month-to-month extension while they undergo review.

Agency: DOL–OSHA.

Title of Collection: General Working Conditions in Shipyard Employment Standard.

OMB Control Number: 1218–0259.

Affected Public: Private Sector—Businesses or other for-profits.

Total Estimated Number of Respondents: 3,996.

Total Estimated Number of Responses: 260,025.

Total Estimated Annual Time Burden: 82,999 hours.

Total Estimated Annual Other Costs Burden: $7,678.

(Authority: 44 U.S.C. 3507(a)(1)(D))

Nora Hernandez,

Departmental Clearance Officer.

[FR Doc. 2022–03189 Filed 2–14–22; 8:45 am]

BILLING CODE 4510–26–P

DEPARTMENT OF LABOR

Mine Safety and Health Administration

Petition for Modification of Application of an Existing Mandatory Safety Standard

AGENCY: Mine Safety and Health Administration, Labor.

ACTION: Notice.

SUMMARY: This notice includes the summary of a petition for modification submitted to the Mine Safety and Health Administration (MSHA) by the party listed below.

DATES: All comments on the petition must be received by MSHA's Office of Standards, Regulations, and Variances on or before March 17, 2022.

ADDRESSES: You may submit your comments including the docket number of the petition by any of the following methods:

1. *Email: zzMSHA-comments@dol.gov.* Include the docket number of the petition in the subject line of the message.

2. *Facsimile:* 202–693–9441.

3. *Regular Mail or Hand Delivery:* MSHA, Office of Standards, Regulations, and Variances, 201 12th Street South, Suite 4E401, Arlington, Virginia 22202–5452,

Attention: Song-Ae A. Noe, Acting Director, Office of Standards, Regulations, and Variances. Persons delivering documents are required to check in at the receptionist's desk in Suite 4E401. Individuals may inspect copies of the petition and comments during normal business hours at the address listed above. Before visiting MSHA in person, call 202–693–9455 to make an appointment, in keeping with the Department of Labor's COVID–19 policy. Special health precautions may be required.

MSHA will consider only comments postmarked by the U.S. Postal Service or proof of delivery from another delivery service such as UPS or Federal Express on or before the deadline for comments.

FOR FURTHER INFORMATION CONTACT: S. Aromie Noe, Office of Standards, Regulations, and Variances at 202–693–9440 (voice), *Noe.Song-Ae@dol.gov* (email), or 202–693–9441 (facsimile). [These are not toll-free numbers.]

SUPPLEMENTARY INFORMATION: Section 101(c) of the Federal Mine Safety and Health Act of 1977 and Title 30 of the Code of Federal Regulations (CFR) part 44 govern the application, processing, and disposition of petitions for modification.

I. Background

Section 101(c) of the Federal Mine Safety and Health Act of 1977 (Mine Act) allows the mine operator or representative of miners to file a petition to modify the application of any mandatory safety standard to a coal or other mine if the Secretary of Labor (Secretary) determines that:

1. An alternative method of achieving the result of such standard exists which will at all times guarantee no less than the same measure of protection afforded the miners of such mine by such standard; or

2. The application of such standard to such mine will result in a diminution of safety to the miners in such mine.

3. In addition, sections 44.10 and 44.11 of 30 CFR establish the requirements for filing petitions for modification.

II. Petition for Modification

Docket Number: M–2021–005–M.

Petitioner: U.S. Silica Company, Pacific Plant, 819 Osage Street, MO 63039.

Mine: Pacific Plant, MSHA ID No. 23–00544, located in Franklin County, Missouri.

Regulation Affected: 30 CFR 56.13020 (Use of compressed air).

Modification Request: The petitioner requests a modification of the existing standard, 30 CFR 56.13020, as it relates to the use of compressed air. The alternative method provides a direct reduction of a miner's exposure to respirable dust, thus reducing health risks while providing no less a degree of safety than that provided by the standard.

The petitioner proposes the following alternative method:

1. The proposed alternative method has been developed jointly between Unimin Corporation and the National Institute for Occupational Safety and Health (NIOSH) and has been successfully tested by NIOSH. The system consists of four major components: A cleaning booth, an air spray manifold, an air reservoir, and an exhaust ventilation system.

2. The petitioner will use a clothes cleaning booth, CCB Elite I & II, serial number 5405, manufactured by S.K. Bowling, Inc.

3. Only miners trained in the operation of the clothes cleaning booth (booth) will be permitted to use the booth to clean their clothes.

4. The petitioner will incorporate the NIOSH Clothes Cleaning Process and manufacturer's instruction manuals into their MSHA Part 46 Training Plan and train affected miners in the process.

5. Miners entering the booth shall examine valves and nozzles for damage or malfunction and will close the door fully before opening the air valve. Any defects shall be repaired prior to the booth being used.

6. Miners entering the booth will wear eye protection, earplugs or muffs for hearing protection, and respiratory protection meaning a full-face or halfmask respirator that meets or exceeds the minimum requirements of an N95 filter to which the miner has been fit-tested. As an alternative, the use of a full-face respirator will also meet the requirement for eye protection. A conspicuously posted sign will announce the required personal protective equipment for entering the booth.

7. Airflow through the booth will be at least 2,000 cubic feet per minute (cfm) to maintain negative pressure during use of the cleaning system in order to prevent contamination of the environment outside the booth. Airflow will be in a downward direction, thus moving contaminants away from the miner's breathing zone.

8. Air pressure through the spray manifold will be limited to 30 pounds per square inch or less. A lock box with a single, plant manager-controlled key, will be used to prevent tampering of the pressure regulator.

9. The air spray manifold will consist of schedule 80, steel pipe that has a failure pressure of 1,300 pounds per square inch. It will be capped at the base and actuated by an electrically controlled ball valve at the top.

10. Air nozzles must not exceed 30 pound(s) per square inch gauge.

11. The uppermost spray of the spray manifold will be located below the booth user's breathing zone. A mechanical device can be used to cover the upper air nozzles to meet the specific height of the user.

12. Air nozzles shall be guarded to eliminate the possibility of incidental contact, which could create mechanical damage to the air nozzles during the clothes cleaning process.

13. The petitioner shall conduct periodic maintenance checks of the booth in accordance with the recommendations contained in the manufacturer's instruction manual.

14. The air receiver tank supplying air to the manifold system will be of sufficient volume to permit no less than 20 seconds of continuous cleaning time.

15. An appropriate hazard warning sign will be posted on the booth to state, at a minimum, ''Compressed Air'' and ''Respirable Dust.''

16. A pressure relief valve design for the booth's air reservoir will be installed.

17. The mine will exhaust dust-laden air from the booth into a local exhaust ventilation system or duct outside the facility while ensuring there is no reentrainment back into the structure.

The petitioner asserts that the alternate method proposed will at all times guarantee no less than the same measure of protection afforded the miners under the mandatory standard.

Song-Ae Aromie Noe,

Acting Director, Office of Standards, Regulations, and Variances.

[FR Doc. 2022–03188 Filed 2–14–22; 8:45 am]

BILLING CODE 4510–43–P

DEPARTMENT OF LABOR

Occupational Safety and Health Administration

[Docket No. OSHA–2011–0195]

Acrylonitrile Standard; Extension of the Office of Management and Budget's (OMB) Approval of Information Collection (Paperwork) Requirements

AGENCY: Occupational Safety and Health Administration (OSHA), Labor.

ACTION: Request for public comments.

SUMMARY: OSHA solicits public comments concerning its proposal to extend OMB approval of the information collection requirements specified by the Acrylonitrile Standard.

DATES: Comments must be submitted (postmarked, sent, or received) by April 18, 2022.

ADDRESSES:

Electronically: You may submit comments and attachments electronically at *https://www.regulations.gov,* which is the Federal eRulemaking Portal. Follow the instructions online for submitting comments.

Docket: To read or download comments or other material in the docket, go to *https://www.regulations.gov* Documents in the docket are listed in the *https://www.regulations.gov* index; however, some information (*e.g.,* copyrighted material) is not publicly available to read or download through the website. All submissions, including copyrighted material, are available for inspection through the OSHA Docket Office. Contact the OSHA Docket Office at (202) 693–2350 (TTY (877) 889–5627) for assistance in locating docket submissions.

Instructions: All submissions must include the agency name and OSHA docket number (OSHA–2011–0195) for the Information Collection Request (ICR). OSHA will place all comments and requests to speak, including personal information in the public docket, which may be available online. Therefore, OSHA cautions interested parties about submitting personal information such as social security numbers and birthdates. For further information on submitting comments, see the ''Public Participation'' heading in the section of this notice titled **SUPPLEMENTARY INFORMATION.**

FOR FURTHER INFORMATION CONTACT: Seleda Perryman or Theda Kenney, Directorate of Standards and Guidance, OSHA, U.S. Department of Labor; telephone (202) 693–2222.

SUPPLEMENTARY INFORMATION:

I. Background

The Department of Labor, as part of its continuing effort to reduce paperwork and respondent (*i.e.,* employer) burden, conducts a preclearance consultation program to provide the public with an opportunity to comment on proposed and continuing information collection requirements in accordance with the Paperwork Reduction Act of 1995 (PRA) (44 U.S.C. 3506(c)(2)(A)). This program

ensures that information is in the desired format, reporting burden (time and costs) is minimal, collection instruments are clearly understood, and OSHA's estimate of the information collection burden is accurate. The Occupational Safety and Health Act of 1970 (OSH Act) (29 U.S.C. 651 *et seq.*) authorizes information collection by employers as necessary or appropriate for enforcement of the OSH Act or for developing information regarding the causes and prevention of occupational injuries, illnesses, and accidents (29 U.S.C. 657). The OSH Act also requires that OSHA obtain such information with minimum burden upon employers, especially those operating small businesses, and to reduce to the maximum extent feasible unnecessary duplication of effort in obtaining information (29 U.S.C. 657).

The information collection requirements specified in the Acrylonitrile (AN) Standard (29 CFR 1910.1045) protect workers from the adverse health effects that may result from their exposure to AN. The major information collection requirements of the AN Standard include notifying workers of their AN exposures, implementing a written compliance program, providing examining physicians with specific information, ensuring that workers receive a copy of their medical examination results, maintaining worker's exposure monitoring and medical records for specific periods, and providing access to these records by OSHA, the National Institute for Occupational Safety and Health (NIOSH), the affected workers, and designated representatives.

II. Special Issues for Comment

OSHA has a particular interest in comments on the following issues:

- Whether the proposed information collection requirements are necessary for the proper performance of the agency's functions to protect workers, including whether the information is useful;
- The accuracy of OSHA's estimate of the burden (time and costs) of the information collection requirements, including the validity of the methodology and assumptions used;
- The quality, utility, and clarity of the information collected; and
- Ways to minimize the burden on employers who must comply. For example, by using automated or other technological information collection, and transmission techniques.

III. Proposed Actions

The agency is requesting an adjustment increase of 12,087 burden hours (from 2,619 hours to 14,706 hours). The increase in burden is due to an increase in the number of employees and the number of establishments. In addition, the estimated capital cost to the employer has increased from $208,077.00 to $1,164,652.89, a total increase of $956,575.89. This increase is due to an increase in the number of workers being sampled and receiving medical exams.

Type of Review: Extension of a currently approved collection.

Title: Acrylonitrile Standard (29 CFR 1910.1045).

OMB Control Number: 1218–0126.

Affected Public: Business or other for-profits.

Number of Respondents: 139.

Number of Responses: 38,022.

Frequency of Responses: On occasion.

Average Time per Response: Varies.

Estimated Total Burden Hours: 14,706.

Estimated Cost (Operation and Maintenance): $1,164,652.89.

IV. Public Participation—Submission of Comments on This Notice and Internet Access to Comments and Submissions

You may submit comments in response to this document as follows: (1) Electronically at *https://www.regulations.gov,* which is the Federal eRulemaking Portal; (2) by facsimile; or (3) by hard copy. Please note: While OSHA's Docket Office is continuing to accept and process submissions by regular mail due to the COVID–19 pandemic, the Docket Office is closed to the public and not able to receive submissions to the docket by hand, express mail, messenger, and courier service. All comments, attachments, and other material must identify the agency name and the OSHA docket number for the ICR (Docket No. OSHA–2011–0195). You may supplement electronic submissions by uploading document files electronically. If you wish to mail additional materials in reference to an electronic or a facsimile submission, you must submit them to the OSHA Docket Office (see the section of this notice titled **ADDRESSES**). The additional materials must clearly identify your electronic comments by your name, date, and the docket number so that the agency can attach them to your comments.

Due to security procedures, the use of regular mail may cause a significant delay in the receipt of comments.

Comments and submissions are posted without change at *https://www.regulations.gov.* Therefore, OSHA cautions commenters about submitting personal information such as social security numbers and date of birth. Although all submissions are listed in the *https://www.regulations.gov* index, some information (*e.g.,* copyrighted material) is not publicly available to read or download through this website. All submissions, including copyrighted material, are available for inspection and copying at the OSHA Docket Office. Information on using the *https://www.regulations.gov* website to submit comments and access the docket is available at the website's ''User Tips'' link. Contact the OSHA Docket Office at (202) 693–2350, (TTY (877) 889–5627) for information about materials not available from the website, and for assistance in using the internet to locate docket submissions.

V. Authority and Signature

James S. Frederick, Deputy Assistant Secretary of Labor for Occupational Safety and Health, directed the preparation of this notice. The authority for this notice is the Paperwork Reduction Act of 1995 (44 U.S.C. 3506 *et seq.*) and Secretary of Labor's Order No. 1–2012 (77 FR 3912).

Signed at Washington, DC, on February 3, 2022.

James S. Frederick,

Deputy Assistant Secretary of Labor for Occupational Safety and Health.

[FR Doc. 2022–03192 Filed 2–14–22; 8:45 am]

BILLING CODE 4510–26–P

DEPARTMENT OF LABOR

Occupational Safety and Health Administration

[Docket No. OSHA–2006–0028]

MET Laboratories, Inc.: Application for Expansion of Recognition

AGENCY: Occupational Safety and Health Administration (OSHA), Labor.

ACTION: Notice.

SUMMARY: In this notice, OSHA announces the application of MET Laboratories, Inc., for expansion of its recognition as a Nationally Recognized Testing Laboratory (NRTL) and presents the agency's preliminary finding to grant the application.

DATES: Submit comments, information, and documents in response to this notice, or requests for an extension of time to make a submission, on or before March 2, 2022.

ADDRESSES: Submit comments by any of the following methods:

Electronically: Submit comments and attachments electronically at *https://www.regulations.gov,* which is the Federal eRulemaking Portal. Follow the

instructions online for making electronic submissions.

Docket: To read or download submissions or other material in the docket, go to *https://www.regulations.gov* or the OSHA Docket Office at the above address. All documents in the docket are listed in the *https://www.regulations.gov* index; however, some information (*e.g.,* copyrighted material) is not publicly available to read or download through the website. All submissions, including copyrighted material, are available for inspection at the OSHA Docket Office. Contact the OSHA Docket Office at (202) 693–2350 (TTY (877) 889–5627) for assistance in locating docket submissions.

Instructions: All submissions must include the agency name and the OSHA docket number (OSHA–2006–0028). OSHA places comments and other materials, including any personal information, in the public docket without revision, and these materials will be available online at *https://www.regulations.gov.* Therefore, the agency cautions commenters about submitting statements they do not want made available to the public, or submitting comments that contain personal information (either about themselves or others) such as Social Security numbers, birth dates, and medical data. For further information on submitting comments, see the ''Public Participation'' heading in the section of this notice titled **SUPPLEMENTARY INFORMATION.**

Extension of comment period: Submit requests for an extension of the comment period on or before March 2, 2022 to the Office of Technical Programs and Coordination Activities, Directorate of Technical Support and Emergency Management, Occupational Safety and Health Administration, U.S. Department of Labor, by fax to (202) 693–1644.

FOR FURTHER INFORMATION CONTACT: Information regarding this notice is available from the following sources:

Press inquiries: Contact Mr. Frank Meilinger, Director, OSHA Office of Communications, phone: (202) 693–1999 or email: *meilinger.francis2@dol.gov.*

General and technical information: Contact Mr. Kevin Robinson, Director, Office of Technical Programs and Coordination Activities, Directorate of Technical Support and Emergency Management, Occupational Safety and Health Administration, phone: (202) 693–2110 or email: *robinson.kevin@dol.gov.*

SUPPLEMENTARY INFORMATION:

I. Notice of the Application for Expansion

The Occupational Safety and Health Administration is providing notice that MET Laboratories, Inc. (MET), is applying for expansion of its current recognition as a NRTL. MET requests the addition of seventeen test standards to its NRTL scope of recognition.

OSHA recognition of a NRTL signifies that the organization meets the requirements specified in 29 CFR 1910.7. Recognition is an acknowledgment that the organization can perform independent safety testing and certification of the specific products covered within its scope of recognition. Each NRTL's scope of recognition includes (1) the type of products the NRTL may test, with each type specified by its applicable test standard; and (2) the recognized site(s) that has/have the technical capability to perform the product-testing and product-certification activities for test standards within the NRTL's scope. Recognition is not a delegation or grant of government authority; however, recognition enables employers to use products approved by the NRTL to meet OSHA standards that require product testing and certification.

The agency processes applications by a NRTL for initial recognition and for an expansion or renewal of this recognition, following requirements in Appendix A to 29 CFR 1910.7. This appendix requires that the agency publish two notices in the **Federal Register** in processing an application. In the first notice, OSHA announces the application and provides a preliminary finding. In the second notice, the agency provides a final decision on the application. These notices set forth the NRTL's scope of recognition or modifications of that scope. OSHA maintains an informational web page for each NRTL, including MET, which details the NRTL's scope of recognition. These pages are available from the OSHA website at *https://www.osha.gov/dts/otpca/nrtl/index.html.*

MET currently has one facility (site) recognized by OSHA for product testing and certification, with its headquarters located at: MET Laboratories, Inc., 914 West Patapsco Avenue, Baltimore, Maryland 21230. A complete list of MET's scope of recognition is available at *https://www.osha.gov/dts/otpca/nrtl/met.html.*

II. General Background on the Application

MET submitted an application to expand its NRTL recognition on April 20, 2020 (OSHA–2006–0028–0082). The expansion application would add seventeen additional test standards to MET's NRTL scope of recognition. OSHA staff performed a detailed analysis of the application packet and reviewed other pertinent information. OSHA did not perform any on-site reviews in relation to this application.

Table 1, below, lists the appropriate test standards found in MET's application for expansion for testing and certification of products under the NRTL Program.

TABLE 1—PROPOSED APPROPRIATE TEST STANDARDS FOR INCLUSION IN MET'S NRTL SCOPE OF RECOGNITION

Test standard	Test standard title
UL 62841–1	Electric Motor-Operated Hand-Held Tools, Transportable Tools and Lawn and Garden Machinery—Safety—Part 1: General Requirements.
UL 62841–2–2	Electric Motor-Operated Hand-Held Tools, Transportable Tools and Lawn and Garden Machinery—Safety—Part 2–2: Particular Requirements For Hand-Held Screwdrivers and Impact Wrenches.
UL 62841–2–4	Electric Motor-Operated Hand-Held Tools, Transportable Tools and Lawn and Garden Machinery—Safety—Part 2–4: Particular Requirements For Hand-Held Sanders And Polishers Other.
UL 62841–2–5	Electric Motor-Operated Hand-Held Tools, Transportable Tools And Lawn And Garden Machinery—Safety—Part 2–5: Particular Requirements for Hand-Held Circular Saws.
UL 62841–2–8	Safety Requirements for Particular Requirements for Hand-Held Shears and Nibblers.
UL 62841–2–9	Electric Motor-Operated Hand-Held Tools, Transportable Tools And Lawn and Garden Machinery—Safety—Part 2–9: Particular Requirements for Hand-Held Tappers and Threaders.
UL 62841–2–10	Electric Motor-Operated Hand-Held Tools, Transportable Tools And Lawn And Garden Machinery—Part 2–10: Particular Requirements for Hand-Held Mixers.
UL 62841–2–11	Safety Requirements for Particular Requirements for Hand-Held Reciprocating Saws.

TABLE 1—PROPOSED APPROPRIATE TEST STANDARDS FOR INCLUSION IN MET'S NRTL SCOPE OF RECOGNITION—Continued

Test standard	Test standard title
UL 62841–2–14 ...	Electric Motor-Operated Hand-Held Tools, Transportable Tools and Lawn And Garden Machinery—Safety—Part 2–14: Particular Requirements for Hand-Held Planers.
UL 62841–2–17 ...	Electric Motor-Operated Hand-Held Tools, Transportable Tools and Lawn and Garden Machinery—Safety—Part 2–17: Particular Requirements for Hand-Held Routers.
UL 62841–2–21 ...	Electric Motor-Operated Hand-Held Tools, Transportable Tools And Lawn And Garden Machinery—Part 2–21: Particular Requirements for Hand-Held Drain Cleaners.
UL 62841–3–1	Electric Motor-Operated Hand-Held Tools, Transportable Tools and Lawn and Garden Machinery—Safety—Part 3–1: Particular Requirements For Transportable Table Saws.
UL 62841–3–4	Safety Requirements for Particular Requirements for Transportable Bench Grinders.
UL 62841–3–6	Safety Requirements for Particular Requirements for Transportable Diamond Drills with Liquid System.
UL 62841–3–9	Electric Motor-Operated Hand-Held Tools, Transportable Tools and Lawn and Garden Machinery—Safety—Part 3–9: Particular Requirements for Transportable Mitre Saws.
UL 62841–3–13 ...	Electric Motor-Operated Hand-Held Tools, Transportable Tools And Lawn And Garden Machinery—Part 3–13: Particular Requirements for Transportable Drills.
UL 62841–4–2	Standard for Electric Motor-Operated Hand-Held Tools, Transportable Tools and Lawn And Garden Machinery—Safety—Part 4–2: Particular Requirements for Hedge Trimmers.

III. Preliminary Findings on the Application

MET submitted an acceptable application for expansion of its scope of recognition. OSHA's review of the application file, and pertinent documentation, indicate that MET can meet the requirements prescribed by 29 CFR 1910.7 for expanding its recognition to include the addition of these seventeen test standards for NRTL testing and certification listed in Table 1. This preliminary finding does not constitute an interim or temporary approval of MET's application.

OSHA welcomes public comment as to whether MET meets the requirements of 29 CFR 1910.7 for expansion of its recognition as a NRTL. Comments should consist of pertinent written documents and exhibits. Commenters needing more time to comment must submit a request in writing, stating the reasons for the request. Commenters must submit the written request for an extension by the due date for comments. OSHA will limit any extension to 10 days unless the requester justifies a longer period. OSHA may deny a request for an extension if the request is not adequately justified. To obtain or review copies of the exhibits identified in this notice, as well as comments submitted to the docket, contact the Docket Office, at the above address. These materials also are available online at *https://www.regulations.gov* under Docket No. OSHA–2006–0028.

OSHA staff will review all comments to the docket submitted in a timely manner and, after addressing the issues raised by these comments, will make a recommendation to the Assistant Secretary for Occupational Safety and Health whether to grant MET's application for expansion of its scope of recognition. The Assistant Secretary will make the final decision on granting the application. In making this decision, the Assistant Secretary may undertake other proceedings prescribed in Appendix A to 29 CFR 1910.7.

OSHA will publish a public notice of its final decision in the **Federal Register**.

IV. Authority and Signature

James S. Frederick, Deputy Assistant Secretary of Labor for Occupational Safety and Health, authorized the preparation of this notice. Accordingly, the agency is issuing this notice pursuant to Section 29 U.S.C. 657(g)(2), Secretary of Labor's Order No. 8–2020 (85 FR 58393; Sept. 18, 2020), and 29 CFR 1910.7.

Signed at Washington, DC, on January 25, 2022.

James S. Frederick,

Deputy Assistant Secretary of Labor for Occupational Safety and Health.

[FR Doc. 2022–03194 Filed 2–14–22; 8:45 am]

BILLING CODE 4510–26–P

DEPARTMENT OF LABOR

Occupational Safety and Health Administration

[Docket No. OSHA–2017–0012]

National Fall Safety Stand-Down To Prevent Falls in Construction; Office of Management and Budget's (OMB) Approval of Information Collection (Paperwork) Requirements

AGENCY: Occupational Safety and Health Administration, Labor.

ACTION: Request for public comment.

SUMMARY: OSHA solicits public comments concerning the proposal to the Office of Management and Budget's (OMB) approval of the information collection requirements specified in the National Fall Safety Stand-Down to Prevent Falls in Construction.

DATES: Comments must be submitted (postmarked, sent, or received) by April 18, 2022.

ADDRESSES:

Electronically: You may submit comments, including attachments, electronically at *https://www.regulations.gov,* the Federal eRulemaking Portal. Follow the instructions online for submitting comments.

Docket: To read or download comments or other material in the docket, go to *https://www.regulations.gov.* Documents in the docket are listed in the *https://www.regulations.gov* index; however, some information (*e.g.,* copyrighted material) is not publicly available to read or download through the website. All submissions, including copyrighted material, are available for inspection through the OSHA Docket Office. Contact the OSHA Docket Office at (202) 693–2350 (TTY (877) 889–5627) for assistance in locating docket submissions.

Instructions: All submissions must include the agency name and the OSHA docket number for this **Federal Register** notice (OSHA–2017–0012). OSHA will place comments, including personal information, in the public docket, which may be available online. Therefore, OSHA cautions interested parties about submitting personal information such as Social Security numbers and birthdates. For further information on submitting comments, see the ''Public Participation'' heading in the section of

this notice titled **SUPPLEMENTARY INFORMATION.**

FOR FURTHER INFORMATION CONTACT: Seleda Perryman or Theda Kenney, Directorate of Standards and Guidance, OSHA, U.S. Department of Labor, telephone (202) 693–2222.

SUPPLEMENTARY INFORMATION:

I. Background

The Department of Labor, as part of the continuing effort to reduce paperwork and respondent (*i.e.,* employer) burden, conducts a preclearance consultation program to provide the public with an opportunity to comment on proposed and continuing information collection requirements in accordance with the Paperwork Reduction Act of 1995 (PRA) (44 U.S.C. 3506(c)(2)(A)). This program ensures that information is in the desired format, reporting burden (time and costs) is minimal, collection instruments are clearly understood, and OSHA's estimate of the information collection burden is accurate. The Occupational Safety and Health Act of 1970 (OSH Act) (29 U.S.C. 651 *et seq.*) authorizes information collection by employers as necessary or appropriate for enforcement of the OSH Act or for developing information regarding the causes and prevention of occupational injuries, illnesses, and accidents (29 U.S.C. 657). The OSH Act also requires that OSHA obtain such information with minimum burden upon employers, especially those operating small businesses, and to reduce to the maximum extent feasible unnecessary duplication of effort in obtaining information (29 U.S.C. 657).

Falls are a leading cause of death for employees. According to 2019 Bureau of Labor Statistics (BLS) data, falls accounted for 418 of the 1,061 construction fatalities, and 880 of the 5,333 fatalities in all recorded industries. The National Fall Safety Stand-Down to Prevent Falls in Construction raises fall hazard awareness across the country in an effort to stop fall fatalities and injuries. The Stand-Down is the biggest safety outreach event ever conducted by the agency. OSHA has collaborated with countless industry leaders and employers over the last eight years to reach over 10 million workers during Stand-Downs.

II. Special Issues for Comment

OSHA has a particular interest in comments on the following issues:

Whether the proposed information collection requirements are necessary for the proper performance of the agency's functions, including whether the information is useful;

The accuracy of OSHA's estimate of the burden (time and costs) of the information collection requirements, including the validity of the methodology and assumptions used;

The quality, utility, and clarity of the information collected; and

Ways to minimize the burden on employers who must comply. For example, by using automated or other technological information collection and transmission techniques.

III. Proposed Actions

OSHA is requesting that OMB approve the information collection requirements contained in the National Fall Safety Stand-Down to Prevent Falls in Construction (29 U.S.C. 669). In this information collection request, there are 4,500 respondents for an Occupational Health and Safety Specialists with 750 total burden hours.

Type of Review: Extension of currently approved collection.

Title: National Fall Safety Stand-Down to Prevent Falls in Construction.

OMB Control Number: 1218–0271.

Affected Public: Business or other for-profits.

Number of Respondents: 4,500.

Frequency of Responses: Annually.

Average Time per Response: OSHA estimates an employer will take 10 minutes to complete the survey.

Estimated Total Burden Hours: 750.

Estimated Cost (Operation and Maintenance): $0.

IV. Public Participation—Submission of Comments on This Notice and Internet Access to Comments and Submissions

You may submit comments in response to this document as follows: (1) Electronically at *https://www.regulations.gov,* which is the Federal eRulemaking Portal; (2) by facsimile (fax) at (202) 693–1648; or (3) by hard copy. All comments, attachments, and other materials must identify the agency name and the OSHA docket number for the ICR (Docket No. OSHA–2017–0012). You may supplement electronic submissions by uploading document files electronically. Please note: While OSHA's Docket Office is continuing to accept and process submissions by regular mail, due to the COVID–19 pandemic, the Docket Office is closed to the public and not able to receive submissions to the docket by hand, express mail, messenger, and courier service. The additional materials must clearly identify your electronic comments by your name, date, and the docket number so the agency can attach them to your comments.

Comments and submissions are posted without change at *https://www.regulations.gov.* Therefore, OSHA cautions commenters about submitting personal information such as social security numbers and date of birth.

Although all submissions are listed in the *https://www.regulations.gov* index, some information (*e.g.,* copyrighted material) is not publicly available to read or download through this website. All submissions, including copyrighted material, are available for inspection and copying at the OSHA Docket Office. Information on using the *https://www.regulations.gov* website to submit comments and access the docket is available at the website's ''User Tips'' link. Contact the OSHA Docket Office for information about materials not available through the website, and for assistance in using the internet to locate docket submissions.

V. Authority and Signature

James S. Frederick, Deputy Assistant Secretary of Labor for Occupational Safety and Health, directed the preparation of this notice. The authority for this notice is the Paperwork Reduction Act of 1995 (44 U.S.C. 3506 *et seq.*) and Secretary of Labor's Order No. 1–2012 (77 FR 3912).

Signed at Washington, DC, on January 31, 2022.

James S. Frederick,

Deputy Assistant Secretary of Labor for Occupational Safety and Health.

[FR Doc. 2022–03193 Filed 2–14–22; 8:45 am]

BILLING CODE 4510–26–P

NATIONAL AERONAUTICS AND SPACE ADMINISTRATION

[Notice: (22–012)]

Heliophysics Advisory Committee; Space Weather Council; Meeting

AGENCY: National Aeronautics and Space Administration.

ACTION: Notice of meeting.

SUMMARY: In accordance with the Federal Advisory Committee Act, as amended, the National Aeronautics and Space Administration (NASA) announces a meeting of the Space Weather Council (SWC). The SWC is a subcommittee of the Heliophysics Advisory Committee, which functions in an advisory capacity to the Director, Heliophysics Division, in the NASA Science Mission Directorate. The meeting will be held for the purpose of soliciting, from the science community and other persons, scientific and

technical information relevant to program planning.

DATES: Wednesday, March 2, 2022, 12:00 p.m. to 3:00 p.m. Eastern Time.

ADDRESSES: Meeting will be virtual only. See dial-in information below under **SUPPLEMENTARY INFORMATION.**

FOR FURTHER INFORMATION CONTACT: Ms. Karshelia Kinard, Science Mission Directorate, NASA Headquarters, Washington, DC 20546, (202) 358–2355 or *karshelia.kinard@nasa.gov.*

SUPPLEMENTARY INFORMATION: This meeting will be available telephonically and via WebEx. You must use a touch-tone phone to participate in this meeting. Any interested person may dial the USA toll free conference call number 1–877–939–1570 or toll number 1–210–234–0110, participant code 9775739, March 2, to participate in this meeting by telephone. The WebEx link is *https://nasa.webex.com/;* the meeting number is 2761 914 7537; the password is PkPJdEV@334 (case sensitive).

The agenda for the meeting includes the following topics:

- Introduction of the SWC and its members
- Overview of NASA Heliophysics Division and its space weather activities
- Discussion of SWC future advisory topics and activities

Carol Hamilton,

Advisory Committee Management Officer (Acting), National Aeronautics and Space Administration.

[FR Doc. 2022–03210 Filed 2–14–22; 8:45 am]

BILLING CODE 7510–13–P

NATIONAL CREDIT UNION ADMINISTRATION

Sunshine Act Meetings

TIME AND DATE: 11:30 a.m., Thursday, February 17, 2022.

PLACE: Due to the COVID–19 Pandemic, the meeting will be open to the public via live webcast only. Visit the agency's homepage (*www.ncua.gov*) and access the provided webcast link.

STATUS: This meeting will be open to the public.

MATTERS TO BE CONSIDERED:

1. Board Briefing, Share Insurance Fund Quarterly Report.
2. NCUA Rules and Regulations, Asset Threshold for Determining the Appropriate Supervisory Office.
3. NCUA Rules and Regulations, Prompt Corrective Action.

CONTACT PERSON FOR MORE INFORMATION: Melane Conyers-Ausbrooks, Secretary of the Board, Telephone: 703–518–6304.

Melane Conyers-Ausbrooks,

Secretary of the Board.

[FR Doc. 2022–03285 Filed 2–11–22; 11:15 am]

BILLING CODE 7535–01–P

NATIONAL FOUNDATION ON THE ARTS AND THE HUMANITIES

National Endowment for the Humanities

Privacy Act of 1974; System of Records Notice; Correction

AGENCY: National Endowment for the Humanities; National Foundation on the Arts and the Humanities.

ACTION: Notice of republication of systems of records and new routine uses; correction.

SUMMARY: The National Endowment for the Humanities (NEH) published a notice of systems of records in the **Federal Register** of April 26, 2017. The references in the document to specific sections of the Code of Federal Regulations are out of date.

FOR FURTHER INFORMATION CONTACT: Elizabeth Voyatzis, Deputy General Counsel, Office of the General Counsel, National Endowment for the Humanities, 400 7th Street SW, Room 4060, Washington, DC 20506; (202) 606–8322; *gencounsel@neh.gov.*

SUPPLEMENTARY INFORMATION:

Correction

1. In the **Federal Register** of April 26, 2017, in FR Doc. 2017–08410, on page 19266, in the first column, correct ''45 CFR 1115.3'' to read ''45 CFR 1169.4,'' correct ''45 CFR 1115.4'' to read ''45 CFR 1169.5,'' correct ''45 CFR 1115.5'' to read ''45 CFR 1169.7,'' and correct ''45 CFR 1115.7'' to read ''45 CFR 1169.10.''
2. In the **Federal Register** of April 26, 2017, in FR Doc. 2017–08410, on page 19268, in the first column, correct ''45 CFR 1115.3'' to read ''45 CFR 1169.4,'' correct ''45 CFR 1115.4'' to read ''45 CFR 1169.5,'' and correct ''45 CFR 1115.5'' to read ''45 CFR 1169.7.''
3. In the **Federal Register** of April 26, 2017, in FR Doc. 2017–08410, on page 19269, in the third column, correct ''45 CFR 1115.3'' to read ''45 CFR 1169.4,'' correct ''45 CFR 1115.4'' to read ''45 CFR 1169.5,'' and correct ''45 CFR 1115.5'' to read ''45 CFR 1169.7.''
4. In the **Federal Register** of April 26, 2017, in FR Doc. 2017–08410, on page 19271, in the third column, correct ''45 CFR 1115.3'' to read ''45 CFR 1169.4,'' correct ''45 CFR 1115.4'' to read ''45 CFR 1169.5,'' and correct ''45 CFR 1115.5'' to read ''45 CFR 1169.7.''
5. In the **Federal Register** of April 26, 2017, in FR Doc. 2017–08410, on page 19273, in the third column, correct ''45 CFR 1115.3'' to read ''45 CFR 1169.4,'' correct ''45 CFR 1115.4'' to read ''45 CFR 1169.5,'' correct ''45 CFR 1115.5'' to read ''45 CFR 1169.7,'' and correct ''45 CFR 1115.7'' to read ''45 CFR 1169.10.''
6. In the **Federal Register** of April 26, 2017, in FR Doc. 2017–08410, on page 19275, in the third column, correct ''45 CFR 1115.3'' to read ''45 CFR 1169.4,'' correct ''45 CFR 1115.4'' to read ''45 CFR 1169.5,'' and correct ''45 CFR 1115.5'' to read ''45 CFR 1169.7.''

Dated: February 10, 2022.

Samuel Roth,

Attorney-Advisor, National Endowment for the Humanities.

[FR Doc. 2022–03211 Filed 2–14–22; 8:45 am]

BILLING CODE 7536–01–P

NATIONAL SCIENCE FOUNDATION

Agency Information Collection Activities: Comment Request; Education and Human Resources Program Monitoring Clearance

AGENCY: National Science Foundation.

ACTION: Notice.

SUMMARY: The National Science Foundation (NSF) is announcing plans to renew this collection. In accordance with the requirements of the Paperwork Reduction Act of 1995, we are providing opportunity for public comment on this action. After obtaining and considering public comment, NSF will prepare the submission requesting Office of Management and Budget (OMB) clearance of this collection for no longer than 3 years.

DATES: Written comments on this notice must be received by April 18, 2022 to be assured consideration. Comments received after that date will be considered to the extent practicable. Send comments to address below.

FOR FURTHER INFORMATION CONTACT: Suzanne H. Plimpton, Reports Clearance Officer, National Science Foundation, 2415 Eisenhower Avenue, Suite W18253, Alexandria, Virginia 22314; telephone (703) 292–7556; or send email to *splimpto@nsf.gov.* Individuals who use a telecommunications device for the deaf (TDD) may call the Federal Information Relay Service (FIRS) at 1–800–877–8339, which is accessible 24

hours a day, 7 days a week, 365 days a year (including Federal holidays).

SUPPLEMENTARY INFORMATION:

Comments: Comments are invited on (a) whether the proposed collection of information is necessary for program planning, management, evaluation, and audit purposes, including whether the information will have practical utility; (b) the accuracy of NSF's estimate of the burden of the proposed collection of information; (c) ways to enhance the quality, utility, and clarity of the information to be collected, including through the use of automated collection techniques or other forms of information technology; and (d) ways to minimize the burden of the collection of information on those who are to respond, including through the use of appropriate automated collection techniques or other forms of information technology.

Title of Collection: Education and Human Resources Program Monitoring Data Collections.

OMB Approval Number: 3145–0226.

Expiration Date of Approval: July 31, 2022.

Type of Request: Intent to seek renewal of an information collection.

Abstract: The National Science Foundation (NSF) requests re-clearance of program data collections that describe and track outcomes associated with NSF funding that focuses on the Nation's science, technology, engineering, and mathematics (STEM) education and STEM workforce. NSF funds grants, contracts, and cooperative agreements to colleges, universities, and other eligible institutions, and provides graduate research fellowships to individuals in all parts of the United States and internationally.

The Directorate for Education and Human Resources (EHR), a unit within NSF, promotes rigor and vitality within the Nation's STEM education enterprise to further the development of the 21st century's STEM workforce and public scientific literacy. EHR does this through diverse projects and programs that support research, extension, outreach, and hands-on activities that service STEM learning and research at all institutional (*e.g.,* pre-school through postdoctoral) levels in formal and informal settings; and individuals of all ages (birth and beyond). EHR also focuses on broadening participation in STEM learning and careers among United States citizens, permanent residents, and nationals, particularly those individuals traditionally underemployed in the STEM research workforce, including but not limited to women, persons with disabilities, and racial and ethnic minorities.

The scope of this information collection request will primarily cover descriptive information gathered from education and training (E&T) projects that are funded by NSF. NSF will primarily use the data from this collection for program planning, management, and audit purposes to respond to queries from the Congress, the public, NSF's external merit reviewers who serve as advisors, including Committees of Visitors (COVs), the NSF's Office of the Inspector General, and as a basis for either internal or third-party evaluations of individual programs.

The collections will generally include three categories of descriptive data: (1) Staff and project participants (data that are also necessary to determine individual-level treatment and control groups for future third-party study or for internal evaluation); (2) project implementation characteristics (also necessary for future use to identify well-matched comparison groups); and (3) project outputs (necessary to measure baseline for pre- and post- NSF-funding-level impacts).

Use of the Information: This information is required for effective administration, communication, program and project monitoring and evaluation, and for measuring attainment of NSF's program, project, and strategic goals, and as identified by the President's Accountability in Government Initiative; GPRA, and the NSF's Strategic Plan. The Foundation's FY 2014–2018 Strategic Plan may be found at: *http://www.nsf.gov/pubs/2014/nsf14043/nsf14043.pdf.*

Since this collection will primarily be used for accountability and evaluation purposes, including responding to queries from COVs and other scientific experts, a census rather than sampling design typically is necessary. At the individual project level funding can be adjusted based on individual project's responses to some of the surveys. Some data collected under this collection will serve as baseline data for separate research and evaluation studies.

NSF-funded contract or grantee researchers and internal or external evaluators in part may identify control, comparison, or treatment groups for NSF's E&T portfolio using some of the descriptive data gathered through this collection to conduct well-designed, rigorous research and portfolio evaluation studies.

Respondents: Individuals or households, not-for-profit institutions, business or other for profit, and Federal, State, local or tribal government.

Number of Respondents: 1,973.

Burden on the Public: NSF estimates that a total reporting and recordkeeping burden of 29,856 hours will result from activities to monitor EHR STEM education programs. The calculation is shown in Table 1.

TABLE 1—ANTICIPATED PROGRAMS THAT WILL COLLECT DATA ON PROJECT PROGRESS AND OUTCOMES ALONG WITH THE NUMBER OF RESPONDENTS AND BURDEN HOURS PER COLLECTION PER YEAR

Collection title	Number of respondents	Number of responses	Annual hour burden
Centers of Research Excellence in Science and Technology (CREST) and Historically Black Colleges and Universities Research Infrastructure for Science and Engineering (HBCU–RISE) Monitoring System	42	42	1,648
Louis Stokes Alliances for Minority Participation (LSAMP) Monitoring System	625	625	16,250
Louis Stokes Alliances for Minority Participation Bridge to the Doctorate (LSAMP–BD) Monitoring System	56	56	1,008
Robert Noyce Teacher Scholarship Program (Noyce) Monitoring System	550	550	6,050
Scholarships in Science, Technology, Engineering, and Mathematics (S–STEM) Monitoring System	700	*1,400	4,900
Total	1,973	2,673	29,856

* (Two responses annually.)

Dated: February 9, 2022.

Suzanne H. Plimpton,

Reports Clearance Officer, National Science Foundation.

[FR Doc. 2022–03165 Filed 2–14–22; 8:45 am]

BILLING CODE 7555–01–P

OFFICE OF PERSONNEL MANAGEMENT

Comment Request for Review of a Generic Information Collection: Program Services Evaluation Surveys

AGENCY: Office of Personnel Management.

ACTION: 60-Day notice and request for comments.

SUMMARY: The Office of Personnel Management (OPM) intends to submit to the Office of Management and Budget (OMB) a request for review of a currently approved collection, *Program Services Evaluation Surveys,* as a Generic Collection. Approval of the Program Services Evaluation Surveys is necessary to collect information on Federal agency and program performance, climate, engagement, leadership effectiveness, and give OPM the ability to customize each survey based on client requirements.

DATES: Comments are encouraged and will be accepted until April 18, 2022.

ADDRESSES: You may submit comments, identified by docket number and/or Regulatory Information Number (RIN) and title, by the following method:

• *Federal Rulemaking Portal: http://www.regulations.gov* Follow the instructions for submitting comments. The general policy for comments and other submissions from members of the public is to make these submissions available for public viewing at *http://www.regulations.gov* as they are received without change, including any personal identifiers or contact information.

FOR FURTHER INFORMATION CONTACT: A copy of this information collection request, with applicable supporting documentation, may be obtained by contacting Human Resources Solutions/HR Strategy and Evaluation Solutions, Office of Personnel Management, 1900 E Street NW, Washington, DC 20415, Attention: Bernard J. Nickels, Ph.D., or via email to *Organizational_Assessment@opm.gov;* or by phone at 202–606–8001.

SUPPLEMENTARY INFORMATION: As required by the Paperwork Reduction Act of 1995 (Pub. L. 104–13, 44 U.S.C. chapter 35), as amended by the Clinger-Cohen Act (Pub. L. 104–106), OPM is soliciting comments for this collection. The previous collection (OMB No. 3206–0252, published in the **Federal Register** on May 27, 2021 at 86 FR 28645) has a clearance that expires May 3, 2022. Comments are particularly invited on:

1. Whether the proposed collection of information is necessary for the proper performance of the functions of the agency, including whether the information will have practical utility;
2. Whether our estimate of the public burden of this collection is accurate, and based on valid assumptions and methodology; and
3. Ways in which we can minimize the burden of the collection of information on those who are to respond, through the use of the appropriate technological collection techniques or other forms of information technology.

OPM's Human Resources Strategy and Evaluation Solutions performs assessment and related consultation activities for Federal agencies on a reimbursable basis. The assessments are authorized by various statutes and regulations: Section 4702 of Title 5, U.S.C.; E.O. 12862; E.O. 13715; Section 1128 of the National Defense Authorization Act for Fiscal Year 2004, Public Law 108–136; 5 U.S.C. 1101 note, 1103(a)(5), 1104, 1302, 3301, 3302, 4702, 7701 note; E.O. 13197, 66 FR 7853, 3 CFR 748 (2002); E.O. 10577, 12 FR 1259, 3 CFR, 1954–1958 Comp., p. 218; and Section 4703 of Title 5, United States Code.

This collection request includes surveys we currently use and plan to use during the next three years to measure agency performance, climate, engagement, and leadership effectiveness. OMB No. 3206–0252 covers a broad range of surveys all focused on improving organizational performance. Non-Federal respondents will almost never receive more than one of these surveys. All of these surveys consist of Likert-type, mark-one, and mark-all-that-apply items, and may include a small number of open-ended comment items. The surveys included under OMB No. 3206–0252 are almost always administered electronically.

Analysis

Agency: Human Resources Strategy and Evaluation Solutions, Office of Personnel Management.

Title: Program Services Evaluation Surveys.

OMB: 3206–0252.

Frequency: On occasion.

Affected Public: Government contractors and individuals.

Number of Respondents: 78,780.

Estimated Time per Respondent: 12 minutes.

Total Burden Hours: 15,756 hours.

Office of Personnel Management.

Kellie Cosgrove Riley,

Director, Office of Privacy and Information Management.

[FR Doc. 2022–03219 Filed 2–14–22; 8:45 am]

BILLING CODE 6325–43–P

RAILROAD RETIREMENT BOARD

Proposed Collection; Comment Request

SUMMARY: In accordance with the requirement of Section 3506(c)(2)(A) of the Paperwork Reduction Act of 1995 which provides opportunity for public comment on new or revised data collections, the Railroad Retirement Board (RRB) will publish periodic summaries of proposed data collections.

Comments are invited on: (a) Whether the proposed information collection is necessary for the proper performance of the functions of the agency, including whether the information has practical utility; (b) the accuracy of the RRB's estimate of the burden of the collection of the information; (c) ways to enhance the quality, utility, and clarity of the information to be collected; and (d) ways to minimize the burden related to the collection of information on respondents, including the use of automated collection techniques or other forms of information technology.

1. Title and purpose of information collection: Employer's Quarterly Report of Contributions under the Railroad Unemployment Insurance Act; OMB 3220–0012.

Under Section 8 of the Railroad Unemployment Insurance Act (RUIA) (45 U.S.C. 231g), as amended by the Railroad Unemployment Improvement Act of 1988 (Pub. L. 100–647), the RRB determines the amount of an employer's contribution, primarily on the basis of the RUIA benefits paid, both unemployment and sickness, to the employees of the railroad employer. These experienced-based contributions take into account the frequency, volume, and duration of the employees' unemployment and sickness benefits. Each employer's contribution rate includes a component for administrative expenses as well as a component to cover costs shared by all employers. The regulations prescribing the manner and conditions for remitting the contributions and for adjusting overpayments or underpayments of contributions are contained in 20 CFR 345.

RRB Form DC–1, Employer's Quarterly Report of Contributions under the Railroad Unemployment Insurance Act, is used by railroad employers to report and remit their quarterly contributions to the RRB. Employers can use either the manual version of the form or its internet equivalent. One response is requested quarterly of each respondent and completion is mandatory. The RRB proposes no changes to the manual and electronic versions of Form DC–1.

ESTIMATE OF ANNUAL RESPONDENT BURDEN

Form No.	Annual responses	Time (minutes)	Burden (hours)
DC–1 (*RRB.Gov*)	720	25	300
DC–1 (*Pay.Gov*)	1,680	25	700
Total	2,400		1,000

2. Title and purpose of information collection: Application for Survivor Death Benefits; OMB 3220–0031.

Under Section 6 of the Railroad Retirement Act (RRA) (45 U.S.C. 231e), lump-sum death benefits are payable to surviving widow(er)s, children, and certain other dependents. Lump-sum death benefits are payable after the death of a railroad employee only if there are no qualified survivors of the employee immediately eligible for annuities. With the exception of the residual death benefit, eligibility for survivor benefits depends on whether the deceased employee was ''insured'' under the RRA at the time of death. If the deceased employee was not insured, jurisdiction of any survivor benefits payable is transferred to the Social Security Administration and survivor benefits are paid by that agency instead of the RRB. The requirements for applying for benefits are prescribed in 20 CFR 217, 219, and 234.

The collection obtains the information required by the RRB to determine entitlement to and amount of the survivor death benefits applied for. To collect the information, the RRB uses Forms AA–21, *Application for Lump-Sum Death Payment and Annuities Unpaid at Death;* AA–21cert, *Application Summary and Certification;* G–131, *Authorization of Payment and Release of All Claims to a Death Benefit or Accrued Annuity Payment;* and G–273a, *Funeral Director's Statement of Burial Charges.* One response is requested of each respondent. Completion is required to obtain benefits.

The RRB proposes the following changes to Forms AA–21and G–273a:

- Forms AA–21 and—add the RRB headquarters mailing address in Section 10, *How to Return Your Application,* of Form AA–21 in order to provide address information for returning completed forms.
- Form G–273a—add the RRB headquarters mailing address to the last sentence of the second paragraph of Form G–273a above Item 1, *Date of Death,* in order to provide address information for returning completed forms.

The RRB proposes no changes to Form AA-cert or Form G–131.

ESTIMATE OF ANNUAL RESPONDENT BURDEN

Form No.	Annual responses	Time (minutes)	Burden (hours)
AA–21cert with assistance	3,500	20	1,167
AA–21 without assistance	200	40	133
G–131	100	5	8
G–273a	4,000	10	667
Total	7,800		1,975

3. Title and purpose of information collection: Application for Spouse Annuity under the Railroad Retirement Act; OMB 3220–0042.

Section 2(c) of the Railroad Retirement Act (RRA) (45 U.S.C. 231a), provides for the payment of annuities to spouses of railroad retirement annuitants who meet the requirements under the RRA. The age requirements for a spouse annuity depend on the employee's age, date of retirement, and years of railroad service. The requirements relating to the annuities are prescribed in 20 CFR 216, 218, 219, 232, 234, and 295.

To collect the information needed to help determine an applicant's entitlement to, and the amount of, a spouse annuity the RRB uses non-OMB Form AA–3, *Application for Spouse/Divorced Spouse Annuity,* and electronic OMB Forms AA–3cert, *Application Summary and Certification,* and AA–3sum, *Application Summary.*

The AA–3 application process gathers information from an applicant about their marital history, work history, benefits from other government agencies, and Medicare entitlement for a spouse annuity. An RRB representative interviews the applicant either at a field office (preferred), an itinerant point, or by telephone. During the interview, the RRB representative enters the information obtained into an on-line information system. Upon completion of the interview, the system generates, for the applicant's review, either Form AA–3cert or AA–3sum, which is a summary of the information that the applicant provided or verified. Form AA–3cert, *Application Summary and Certification,* requires a traditional pen and ink ''wet'' signature. Form AA–3sum, *Application Summary,* documents an alternate signing method called ''Attestation,'' which is an action taken by the RRB representative to confirm and annotate in the RRB records (1) the applicant's intent to file an application; (2) the applicant's affirmation under penalty of perjury that the information provided is correct; and (3) the applicant's agreement to sign the application by proxy. When the RRB representative is unable to contact the

applicant in person or by telephone, for example, the applicant lives in another country, a manual version of Form AA–3 is used. One response is requested of each respondent. Completion of the form is required to obtain a benefit.

The RRB proposes no changes to Forms AA–3cert and AA–3sum.

ESTIMATE OF ANNUAL RESPONDENT BURDEN

Form No.	Annual responses	Time (minutes)	Burden (hours)
Form AA–3cert (Ink Signature)	6,180	30	3,090
Form AA–3sum (Attestation)	3,520	29	1,701
Total	9,700		4,791

4. Title and purpose of information collection: Statement of Claimant or Other Person; OMB 3220–0183.

To support an application for an annuity under Section 2 of the Railroad Retirement Act (RRA) (45 U.S.C. 231a) or for unemployment benefits under Section 2 of the Railroad Unemployment Insurance Act (RUIA) (45 U.S.C. 352), pertinent information and proofs must be furnished for the RRB to determine benefit entitlement. Circumstances may require an applicant or other person(s) having knowledge of facts relevant to the applicant's eligibility for an annuity or benefits to provide written statements supplementing or changing statements previously provided by the applicant. Under the railroad retirement program these statements may relate to a change in an annuity beginning date(s), date of marriage(s), birth(s), prior railroad or non-railroad employment, an applicant's request for reconsideration of an unfavorable RRB eligibility determination for an annuity or various other matters. The statements may also be used by the RRB to secure a variety of information needed to determine eligibility to unemployment and sickness benefits. Procedures related to providing information needed for RRA annuity or RUIA benefit eligibility determinations are prescribed in 20 CFR 217 and 320 respectively.

The RRB utilizes Form G–93, *Statement of Claimant or Other Person,* to obtain from applicants or other persons, the supplemental or corrective information needed to determine applicant eligibility for an RRA annuity or RUIA benefits. Completion is voluntary. One response is requested of each respondent. The RRB proposes no changes to Form G–93.

ESTIMATE OF ANNUAL RESPONDENT BURDEN

Form No.	Annual responses	Time (minutes) [1]	Burden (hours)
G–93	1,300	15	325

Additional Information or Comments: To request more information or to obtain a copy of the information collection justification, forms, and/or supporting material, contact Kennisha Tucker at (312) 469–2591 or *Kennisha.Tucker@rrb.gov.* Comments regarding the information collection should be addressed to Brian Foster, Railroad Retirement Board, 844 North Rush Street, Chicago, Illinois 60611–1275 or emailed to *Brian.Foster@rrb.gov.* Written comments should be received within 60 days of this notice.

Brian Foster,

Clearance Officer.

[FR Doc. 2022–03164 Filed 2–14–22; 8:45 am]

BILLING CODE 7905–01–P

SECURITIES AND EXCHANGE COMMISSION

[Investment Company Act Release No. 34499; 812–15273]

DoubleLine ETF Trust, et al.

February 9, 2022.

AGENCY: Securities and Exchange Commission (''Commission'').

ACTION: Notice.

Notice of an application under section 6(c) of the Investment Company Act of 1940 (the ''Act'') for an exemption from sections 2(a)(32), 5(a)(1) and 22(d) of the Act and rule 22c–1 under the Act and under sections 6(c) and 17(b) of the Act for an exemption from sections 17(a)(1) and 17(a)(2) of the Act.

SUMMARY OF APPLICATION: Applicants request an order (''Order'') that permits: (a) ActiveShares ETFs (as described in the Reference Order (as defined below)) to issue shares (''Shares'') redeemable in large aggregations only (''creation units''); (b) secondary market transactions in Shares to occur at negotiated market prices rather than at net asset value; and (c) certain affiliated persons of an ActiveShares ETF to deposit securities into, and receive securities from, the ActiveShares ETF in connection with the purchase and redemption of creation units. The relief in the Order would incorporate by reference terms and conditions of the same relief of a previous order granting the same relief sought by applicants, as that order may be amended from time to time (''Reference Order'').[1]

APPLICANTS: DoubleLine ETF Trust, DoubleLine ETF Adviser LP and Foreside Fund Services, LLC.

FILING DATES: The application was filed on October 15, 2021, and amended on December 30, 2021, January 31, 2022 and February 2, 2022.

HEARING OR NOTIFICATION OF HEARING: An order granting the requested relief will be issued unless the Commission orders a hearing. Interested persons may request a hearing on any application by emailing the Commission's Secretary at *Secretarys-Office@sec.gov* and serving applicants with a copy of the request by

[1] Precidian ETFs Trust, *et al.,* Investment Company Act Rel. Nos. 33440 (April 8, 2019) (notice) and 33477 (May 20, 2019) (order).

email, if an email address is listed for the relevant applicant below, or personally or by mail, if a physical address is listed for the relevant applicant below. Hearing requests should be received by the Commission by 5:30 p.m. on March 7, 2022, and should be accompanied by proof of service on applicants, in the form of an affidavit or, for lawyers, a certificate of service. Pursuant to rule 0–5 under the Act, hearing requests should state the nature of the writer's interest, any facts bearing upon the desirability of a hearing on the matter, the reason for the request, and the issues contested. Persons who wish to be notified of a hearing may request notification by emailing the Commission's Secretary.

ADDRESSES: The Commission: *Secretarys-Office@sec.gov.* Applicants: John J. O'Brien, Morgan Lewis & Bockius LLP, *john.obrien@morganlewis.com;* Earl A. Lariscy, DoubleLine ETF Trust, *earl.lariscy@doubleline.com.*

FOR FURTHER INFORMATION CONTACT: Christopher D. Carlson, Senior Counsel, or Trace W. Rakestraw, Branch Chief, at (202) 551–6825 (Division of Investment Management, Chief Counsel's Office).

SUPPLEMENTARY INFORMATION: For applicants' representations, legal analysis, and conditions, please refer to applicants' amended application, dated February 2, 2022, which may be obtained via the Commission's website by searching for the file number, using the Company name box, at *http://www.sec.gov/search/search.htm,* or by calling (202) 551–8090.

For the Commission, by the Division of Investment Management, under delegated authority.

J. Matthew DeLesDernier,

Assistant Secretary.

[FR Doc. 2022–03153 Filed 2–14–22; 8:45 am]

BILLING CODE 8011–01–P

SECURITIES AND EXCHANGE COMMISSION

[Release No. 34–94201; File No. SR–CBOE–2022–004]

Self-Regulatory Organizations; Cboe Exchange, Inc.; Notice of Filing and Immediate Effectiveness of a Proposed Rule Change To Amend Its Fees Schedule

February 9, 2022.

Pursuant to Section 19(b)(1) of the Securities Exchange Act of 1934 (the ''Act''),[1] and Rule 19b–4 thereunder,[2] notice is hereby given that on February 1, 2022, Cboe Exchange, Inc. (the ''Exchange'' or ''Cboe Options'') filed with the Securities and Exchange Commission (the ''Commission'') the proposed rule change as described in Items I, II, and III below, which Items have been prepared by the Exchange. The Commission is publishing this notice to solicit comments on the proposed rule change from interested persons.

I. Self-Regulatory Organization's Statement of the Terms of Substance of the Proposed Rule Change

Cboe Exchange, Inc. (the ''Exchange'' or ''Cboe Options'') proposes to amend its Fees Schedule. The text of the proposed rule change is provided in Exhibit 5.

The text of the proposed rule change is also available on the Exchange's website (*http://www.cboe.com/AboutCBOE/CBOELegalRegulatoryHome.aspx*), at the Exchange's Office of the Secretary, and at the Commission's Public Reference Room.

II. Self-Regulatory Organization's Statement of the Purpose of, and Statutory Basis for, the Proposed Rule Change

In its filing with the Commission, the Exchange included statements concerning the purpose of and basis for the proposed rule change and discussed any comments it received on the proposed rule change. The text of these statements may be examined at the places specified in Item IV below. The Exchange has prepared summaries, set forth in sections A, B, and C below, of the most significant aspects of such statements.

A. Self-Regulatory Organization's Statement of the Purpose of, and Statutory Basis for, the Proposed Rule Change

1. Purpose

The Exchange proposes to amend its Fees Schedule to update the Index License Surcharge fee for transactions in Dow Jones Industrial Average Index (''DJX'') options and to make certain clarifying and corrective changes in the Fees Schedule, effective February 1, 2022.

The Exchange proposes to increase the Index License Surcharge fee currently applicable to orders executed in DJX options in Rate Table—Underlying Symbol List A. The Exchange currently assesses an Index License Surcharge fee of $0.10 per contract for non-Customer orders executed in DJX options. The proposed rule change increases the Index License Surcharge fee applicable to orders executed in DJX options from $0.10 per contract to $0.12 per contract. The Exchange notes that the Index License Surcharge fee in place for DJX options is designed to recoup some of the costs associated with the licenses for this index.[3] The Exchange has recently renewed its license arrangements for its DJX index license and, as a result, the proposed rule change amends the Index License Surcharge fee for DJX options in order to continue to offset some of the costs associated with the license for the index in light of the renewal of the license.

The proposed rule change also makes certain clarifying and corrective changes to the Fees Schedule. The proposed rule change removes language in the Floor Broker Trading Surcharge table related to the requirement that a Floor Broker Trading Permit Holder submit the SPX Tier Appointment Fee Exclusion for Multi-Class Broad-Based Index Spread Transactions Form within three business days of execution of the applicable spread transaction(s) in order to receive the SPX Surcharge waiver for Floor Broker Trading Permit Holders who only execute SPX (including SPXW) options transactions as part of multi-class broad-based index spread transactions. Manual submission of such form by Floor Broker Trading Permit Holders is no longer necessary as the Exchange has automated the process for documenting such transactions for Floor Broker Trading Permit Holders.

The proposed rule change makes a clarifying change regarding Market-Maker Floor Permit Holders that execute contracts in SPX/SPXW in the Market-Maker Tier Appointment Fees table. Specifically, the proposed rule change adds that the SPX Surcharge will not be assessed to a Market-Maker Floor Permit Holder who only executes SPX (including SPXW) options transactions as part of multi-class broad-based index spread transactions. In 2019, the Exchange restructured its Fees Schedule in connection with a technology migration. The SPX Surcharge waiver provision in connection with Market-Maker Floor Permit Holders existed in the Fees Schedule prior to its 2019 restructuring; however, the Exchange inadvertently did not include this waiver provision in the restructured Fees Schedule. The Exchange notes that the same waiver provision related to Floor Broker Trading Permit Holders (as

[1] 15 U.S.C. 78s(b)(1).

[2] 17 CFR 240.19b–4.

[3] *See* Securities Exchange Release No. 52851 (November 29, 2005), 70 FR 72480 (December 5, 2005) (SR–CBOE–2005–84).

described above) was correctly carried over into the restructured Fees Schedule upon the technology migration. As such, the proposed rule change corrects this inadvertent omission and clarifies that the waiver continues to apply to Market-Maker Floor Permit Holders today.

The proposed rule change lastly amends footnote 5, which is appended to the Floor Brokerage Fees table. Currently, footnote 5 provides that floor brokerage fees are charged to the executing broker. To be eligible for the discounted ''crossed'' rate, the executing broker acronym and executing firm number must be the same on both the buy and sell side of an order. The Exchange proposes to update footnote 5 to provide that in order to be eligible for the crossed rate, both the executing broker acronym and Executing Firm ID (''EFID'') must be the same on both the buy and sell side of an order. Particularly, upon the 2019 technology migration, the Exchange adopted (and codified in its Rulebook) EFIDs, which the System uses to identify the TPH and the clearing number for the execution of orders and quotes submitted to the System with that EFID. Indeed, since the 2019 technology migration, the Exchange's billing system looks for the same executing broker acronym and EFID to be on both the buy and sell side of an order, in determining whether an order qualifies for the ''crossed'' rate. Accordingly, the proposed rule change now updates the reference to ''executing firm number'' in footnote 5 to reflect ''EFID''.

2. Statutory Basis

The Exchange believes the proposed rule change is consistent with the Securities Exchange Act of 1934 (the ''Act'') and the rules and regulations thereunder applicable to the Exchange and, in particular, the requirements of Section 6(b) of the Act.[4] Specifically, the Exchange believes the proposed rule change is consistent with the Section 6(b)(5) [5] requirements that the rules of an exchange be designed to prevent fraudulent and manipulative acts and practices, to promote just and equitable principles of trade, to foster cooperation and coordination with persons engaged in regulating, clearing, settling, processing information with respect to, and facilitating transactions in securities, to remove impediments to and perfect the mechanism of a free and open market and a national market system, and, in general, to protect investors and the public interest. Additionally, the Exchange believes the proposed rule change is consistent with Section 6(b)(4) of the Act,[6] which requires that Exchange rules provide for the equitable allocation of reasonable dues, fees, and other charges among its Trading Permit Holders and other persons using its facilities.

The Exchange believes that it is reasonable to increase the amount of the Index License Surcharge fee for orders in DJX options as the proposed increase is consistent with the purpose of such surcharge fee—it is intended to continue to help recoup some of the costs associated with the license for DJX index products in light of recently renewed license arrangements between the Exchange and the DJX index provider. The proposed Index License Surcharge fee is also equitable and not unfairly discriminatory because the surcharge fee will continue to be assessed uniformly for all non-Customer orders in DJX options.

The Exchange believes the proposed rule changes (1) to remove language related to the requirement that a Floor Broker Trading Permit Holder manually submit the SPX Tier Appointment Fee Exclusion for Multi-Class Broad-Based Index Spread Transactions Form (as the process is now automated), (2) to correct an inadvertent omission regarding the SPX Surcharge waiver for Market-Maker Floor Permit Holders that execute multi-class broad-based index spread transactions in SPX/SPXW and (3) to reflect an Exchange-defined term in footnote 5, are reasonable, equitable and not unfairly discriminatory because they do not change any of the fees or rebates assessed by the Exchange, but rather are clarifying changes intended to more accurately reflect the Exchange's current billing processes, thereby increasing transparency in the Fees Schedule and alleviating any potential investor confusion.

B. Self-Regulatory Organization's Statement on Burden on Competition

The Exchange does not believe that the proposed rule changes will impose any burden on intramarket or intermarket competition that is not necessary or appropriate in furtherance of the purposes of the Act. The Exchange does not believe that the proposed rule change in connection with the DJX Index License Surcharge fee will impose any burden on intramarket competition because it applies uniformly to all similarly situated TPHs in a uniform manner (*i.e.,* to all non-Customer executions in DJX options). The Exchange does not believe that the proposed change in connection with the DJX Index License Surcharge fee will impose any burden on intermarket competition that is not necessary or appropriate in furtherance of the purposes of the Act because the proposed amendment to the DJX Index License Surcharge fee applies only to an Exchange proprietary product, which is traded exclusively on Cboe Options and Cboe-affiliated options exchanges. In addition to this, the Exchange does not believe that the proposed rule changes to remove language related to an obsolete requirement, to correct an inadvertent omission, and to reflect a defined term will impose any burden on intramarket or intermarket competition that is not necessary or appropriate in furtherance of the purposes of the Act because the proposed rule changes merely provide clarifications in the Fees Schedule that are designed to more accurately reflect current billing processes, thereby increasing transparency in the Fees Schedule and reducing potential confusion without having any impact on competition.

Additionally, the Exchange notes that it operates in a highly competitive market. TPHs have numerous alternative venues that they may participate on and direct their order flow, including 15 other options exchanges, as well as off-exchange venues, where competitive products are available for trading. Based on publicly available information, no single options exchange has more than 15% of the market share.[7] Therefore, no exchange possesses significant pricing power in the execution of option order flow. Indeed, participants can readily choose to send their orders to other exchange, and, additionally off-exchange venues, if they deem fee levels at those other venues to be more favorable. Moreover, the Commission has repeatedly expressed its preference for competition over regulatory intervention in determining prices, products, and services in the securities markets. Specifically, in Regulation NMS, the Commission highlighted the importance of market forces in determining prices and SRO revenues and, also, recognized that current regulation of the market system ''has been remarkably successful in promoting market competition in its broader forms that are most important to investors and listed companies.'' [8] The fact that this market is competitive has also long been recognized by the courts. In *NetCoalition* v. *Securities and*

[4] 15 U.S.C. 78f(b).

[5] 15 U.S.C. 78f(b)(5).

[6] 15 U.S.C. 78f(b)(4).

[7] *See* Cboe Global Markets U.S. Options Market Volume Summary, Month-to-Date (January 26, 2022), available at *https://www.cboe.com/us/options/market_statistics/*.

[8] *See* Securities Exchange Act Release No. 51808 (June 9, 2005), 70 FR 37496, 37499 (June 29, 2005).

Exchange Commission, the D.C. Circuit stated as follows: ''[n]o one disputes that competition for order flow is 'fierce.' . . . As the SEC explained, '[i]n the U.S. national market system, buyers and sellers of securities, and the broker-dealers that act as their order-routing agents, have a wide range of choices of where to route orders for execution'; [and] 'no exchange can afford to take its market share percentages for granted' because 'no exchange possesses a monopoly, regulatory or otherwise, in the execution of order flow from broker dealers'. . . .''.[9] Accordingly, the Exchange does not believe its proposed fee change imposes any burden on competition that is not necessary or appropriate in furtherance of the purposes of the Act.

C. Self-Regulatory Organization's Statement on Comments on the Proposed Rule Change Received From Members, Participants, or Others

The Exchange neither solicited nor received comments on the proposed rule change.

III. Date of Effectiveness of the Proposed Rule Change and Timing for Commission Action

The foregoing rule change has become effective pursuant to Section 19(b)(3)(A) of the Act[10] and paragraph (f) of Rule 19b–4[11] thereunder. At any time within 60 days of the filing of the proposed rule change, the Commission summarily may temporarily suspend such rule change if it appears to the Commission that such action is necessary or appropriate in the public interest, for the protection of investors, or otherwise in furtherance of the purposes of the Act. If the Commission takes such action, the Commission will institute proceedings to determine whether the proposed rule change should be approved or disapproved.

IV. Solicitation of Comments

Interested persons are invited to submit written data, views and arguments concerning the foregoing, including whether the proposed rule change is consistent with the Act. Comments may be submitted by any of the following methods:

Electronic Comments

- Use the Commission's internet comment form (*http://www.sec.gov/rules/sro.shtml*); or
- Send an email to *rule-comments@sec.gov.* Please include File Number SR–CBOE–2022–004 on the subject line.

Paper Comments

- Send paper comments in triplicate to Secretary, Securities and Exchange Commission, 100 F Street NE, Washington, DC 20549–1090.

All submissions should refer to File Number SR–CBOE–2022–004. This file number should be included on the subject line if email is used. To help the Commission process and review your comments more efficiently, please use only one method. The Commission will post all comments on the Commission's internet website (*http://www.sec.gov/rules/sro.shtml*). Copies of the submission, all subsequent amendments, all written statements with respect to the proposed rule change that are filed with the Commission, and all written communications relating to the proposed rule change between the Commission and any person, other than those that may be withheld from the public in accordance with the provisions of 5 U.S.C. 552, will be available for website viewing and printing in the Commission's Public Reference Room, 100 F Street NE, Washington, DC 20549, on official business days between the hours of 10:00 a.m. and 3:00 p.m. Copies of the filing also will be available for inspection and copying at the principal office of the Exchange. All comments received will be posted without change. Persons submitting comments are cautioned that we do not redact or edit personal identifying information from comment submissions. You should submit only information that you wish to make available publicly. All submissions should refer to File Number SR–CBOE–2022–004 and should be submitted on or before March 8, 2022.

For the Commission, by the Division of Trading and Markets, pursuant to delegated authority.[12]

J. Matthew DeLesDernier,

Assistant Secretary.

[FR Doc. 2022–03138 Filed 2–14–22; 8:45 am]

BILLING CODE 8011–01–P

[9] *NetCoalition* v. *SEC,* 615 F.3d 525, 539 (D.C. Cir. 2010) (quoting Securities Exchange Act Release No. 59039 (December 2, 2008), 73 FR 74770, 74782–83 (December 9, 2008) (SR–NYSEArca–2006–21)).

[10] 15 U.S.C. 78s(b)(3)(A).

[11] 17 CFR 240.19b–4(f).

[12] 17 CFR 200.30–3(a)(12).

SECURITIES AND EXCHANGE COMMISSION

[Investment Company Act Release No. 34500; 812–15231]

Advisors Series Trust and Semper Capital Management, L.P.

February 9, 2022.

AGENCY: Securities and Exchange Commission (''Commission'').

ACTION: Notice.

Notice of an application under section 6(c) of the Investment Company Act of 1940 (''Act'') for an exemption from section 15(a) of the Act, as well as from certain disclosure requirements in rule 20a–1 under the Act, Item 19(a)(3) of Form N–1A, Items 22(c)(1)(ii), 22(c)(1)(iii), 22(c)(8) and 22(c)(9) of Schedule 14A under the Securities Exchange Act of 1934, and sections 6–07(2)(a), (b), and (c) of Regulation S–X (''Disclosure Requirements'').

SUMMARY OF APPLICATION: The requested exemption would permit Applicants (as defined below) to enter into and materially amend subadvisory agreements with subadvisers without shareholder approval and would grant relief from the Disclosure Requirements as they relate to fees paid to the subadvisers.

APPLICANTS: Advisors Series Trust (''Trust''), a Delaware statutory trust registered under the Act as an open-end management investment company with multiple series, including Semper Brentview Dividend Growth Equity Fund (the ''Fund''), and Semper Capital Management, L.P., a Delaware limited partnership registered as an investment adviser under the Investment Advisers Act of 1940 that serves an investment adviser to the Fund (collectively with the Trust, the ''Applicants'').

FILING DATES: The application was filed on May 19, 2021 and amended on August 13, 2021 and November 12, 2021.

HEARING OR NOTIFICATION OF HEARING: An order granting the requested relief will be issued unless the Commission orders a hearing. Interested persons may request a hearing on any application by emailing the Commission's Secretary at *Secretarys-Office@sec.gov* and serving the Applicants with a copy of the request by email, if an email address is listed for the relevant Applicant below, or personally or by mail, if a physical address is listed for the relevant Applicant below. Hearing requests should be received by the Commission by 5:30 p.m. on March 7, 2022, and should be accompanied by proof of service on the Applicants, in the form

of an affidavit, or, for lawyers, a certificate of service. Pursuant to rule 0–5 under the Act, hearing requests should state the nature of the writer's interest, any facts bearing upon the desirability of a hearing on the matter, the reason for the request, and the issues contested. Persons who wish to be notified of a hearing may request notification by emailing the Commission's Secretary.

ADDRESSES: The Commission: *Secretarys-Office@sec.gov.* Applicants: Domenick Pugliese, *dpugliese@sullivanlaw.com.*

FOR FURTHER INFORMATION CONTACT: Steven B. Levine, Senior Counsel, or Kaitlin C. Bottock, Branch Chief, at (202) 551–6825 (Division of Investment Management, Chief Counsel's Office).

SUPPLEMENTARY INFORMATION: For Applicants' representations, legal analysis, and conditions, please refer to Applicants' second amended and restated application, dated November 12, 2021, which may be obtained via the Commission's website by searching for the file number, using the Company name box, at *http://www.sec.gov/search/search.htm,* or by calling (202) 551–8090.

For the Commission, by the Division of Investment Management, under delegated authority.

J. Matthew DeLesDernier,

Assistant Secretary.

[FR Doc. 2022–03152 Filed 2–14–22; 8:45 am]

BILLING CODE 8011–01–P

SECURITIES AND EXCHANGE COMMISSION

[Release No. 34–94203; File No. SR–NSCC–2021–803]

Self-Regulatory Organizations; National Securities Clearing Corporation; Notice of Extension of Review Period of Advance Notice To Establish the Securities Financing Transaction Clearing Service and Make Other Changes

February 9, 2022.

On July 22, 2021, National Securities Clearing Corporation (''NSCC'') filed with the Securities and Exchange Commission (''Commission'') advance notice SR–NSCC–2021–803 (''Advance Notice''), pursuant to Section 806(e)(1) of Title VIII of the Dodd-Frank Wall Street Reform and Consumer Protection Act entitled the Payment, Clearing, and Settlement Supervision Act of 2010 (''Clearing Supervision Act'') [1] and Rule 19b–4(n)(1)(i) under the Securities Exchange Act of 1934 (''Exchange Act'').[2] The Advance Notice was published for comment in the **Federal Register** on August 12, 2021.[3]

Sections 806(e)(1)(E)(ii) and (G)(ii) of the Clearing Supervision Act [4] provide that if the Commission requests additional information, the Commission's period of review of the Advance Notice is tolled, and an additional 60-day review period begins on the date any further information requested for consideration is received. On August 30, 2021, the Commission, by the Division of Trading and Markets, pursuant to delegated authority,[5] requested additional information from NSCC under Section 806(e)(1)(D) of the Clearing Supervision Act.[6] On December 13, 2021, the Commission received NSCC's response to the Commission's request for additional information. Accordingly, pursuant to Sections 806(e)(1)(E)(ii) and (G)(ii),[7] the Commission shall notify NSCC of any objection regarding the Advance Notice no later than February 11, 2022.

Section 806(e)(1)(H) of the Clearing Supervision Act [8] provides that the Commission may extend the review period of an advance notice for an additional 60 days, if the changes proposed in the advance notice raise novel or complex issues, subject to the Commission providing the clearing agency with prompt written notice of the extension. Here, the Commission is extending the review period of the Advance Notice for an additional 60 days pursuant to that authority because the Commission finds that the Advance Notice raises both novel and complex issues, as discussed further below.

Specifically, the proposed changes described in the Advance Notice would establish new membership categories and requirements, and establish a new central clearing service for equity securities financing transactions (''SFTs''). NSCC described SFTs as, broadly speaking, securities lending transactions where parties exchange equity securities against cash and simultaneously agree to exchange the same securities and cash, plus or minus a rate payment, on a future date. In particular, the Advance Notice would expand central clearing at NSCC to include SFTs with a one business day term (*i.e.,* overnight SFTs) in eligible equity securities that are entered into either by Members, institutional firms that are sponsored into NSCC by a sponsoring member, or agent clearing members on behalf of Customers. Currently, such SFTs are not centrally cleared at NSCC and, instead, are settled bilaterally.

The establishment of a central clearing service for SFTs requires a number of changes to the NSCC Rules & Procedures to effectuate and manage the risks arising from this new service. For example, the proposed changes would encompass new membership categories, including agent clearing and sponsored clearing models that do not currently exist at NSCC. In addition, the proposed changes would establish new risk management features to allow NSCC to measure and monitor the risk arising from the SFT transactions, including a methodology to provide mark-to-market payments and to close out a defaulted member's portfolio. NSCC would institute rules governing buy-in, recall, and accelerated settlement, which are generally designed to be consistent with how SFTs operate when settled bilaterally. Taken together, the rules that NSCC would establish to administer this new central clearing service for SFTs raise novel and complex issues for NSCC.

Accordingly, pursuant to 806(e)(1)(H) of the Clearing Supervision Act,[9] the Commission is extending the review period of the Advance Notice for an additional 60 days so that the Commission shall have until April 12, 2022 to issue an objection or non-objection to the Advance Notice, unless the Commission requests further information for consideration of the Advance Notice (SR–NSCC–2021–803).

The proposal shall not take effect until all regulatory actions required with respect to the proposal are completed.

For the Commission, by the Division of Trading and Markets, pursuant to delegated authority.[10]

J. Matthew DeLesDernier,

Assistant Secretary.

[FR Doc. 2022–03141 Filed 2–14–22; 8:45 am]

BILLING CODE 8011–01–P

[1] 12 U.S.C. 5465(e)(1).

[2] 17 CFR 240.19b–4(n)(1)(i).

[3] Securities Exchange Act Release No. 92568 (August 5, 2021), 86 FR 44530 (August 12, 2021) (SR–NSCC–2021–803).

[4] *See* 12 U.S.C. 5465(e)(1)(E)(ii) and (G)(ii).

[5] 17 CFR 200.30–3(a)(93).

[6] 12 U.S.C. 5465(e)(1)(D).

[7] *See* 12 U.S.C. 5465(e)(1)(E)(ii) and (G)(ii).

[8] 12 U.S.C. 5465(e)(1)(H).

[9] *Id.*

[10] 17 CFR 200.30–3(a)(94).

SECURITIES AND EXCHANGE COMMISSION

[Release No. 34–94204; File No. SR–CBOE–2021–046]

Self-Regulatory Organizations; Cboe Exchange, Inc.; Notice of Filing of Amendment No. 1 and Order Granting Accelerated Approval of a Proposed Rule Change, as Modified by Amendment No. 1, To Amend Cboe Rule 5.4 and Make Corresponding Changes to Other Rules

February 9, 2022.

I. Introduction

On August 6, 2021, Cboe Exchange, Inc. (the ''Exchange'' or ''Cboe Options'') filed with the Securities and Exchange Commission (''Commission''), pursuant to Section 19(b)(1) of the Securities Exchange Act of 1934 (''Act'') [1] and Rule 19b–4 thereunder,[2] a proposed rule change to allow all complex orders to be quoted and executed in $0.01 increments and to allow complex orders with any ratio equal to or greater than one-to-three and less than or equal to three-to-one to trade electronically.[3] The proposed rule change was published for comment in the **Federal Register** on August 25, 2021.[4] The Commission received two comment letters regarding the proposal.[5] Cboe responded to the comments on September 23, 2021.[6] On September 28, 2021, pursuant to Section 19(b)(2) of the Act,[7] the Commission designated a longer period within which to approve the proposed rule change, disapprove the proposed rule change, or institute proceedings to determine whether to approve or disapprove the proposed rule change.[8] On November 1, 2021, the Exchange filed Amendment No. 1 to the proposed rule change.[9] The Commission is publishing this notice to solicit comment on Amendment No. 1 and is approving the proposed rule change, as modified by Amendment No. 1, on an accelerated basis.

II. Description of the Proposed Rule Change, as Modified by Amendment No. 1

Currently, Exchange Rule 5.4 provides that, except as provided in Exchange Rule 5.33, the minimum increment for bids and offers on complex orders with any ratio equal to or greater than one-to-three and less than or equal to three-to-one for equity and index options, and Index Combo orders, is $0.01 or greater, which the Exchange may determine on a class-by-class basis, and the legs may be executed in $0.01 increments. The rule further provides that the minimum increment for bids and offers on complex orders with any ratio less than one-to-three or greater than three-to-one for equity and index options (except for Index Combo orders) is the standard increment for the class pursuant to Exchange Rule 5.4(a), and the legs may be executed in the minimum increment applicable to the class pursuant to Exchange Rule 5.4(a).[10] The Exchange proposes to amend Exchange Rule 5.4(a) to allow complex orders with any ratio to be quoted in increments of $0.01 or greater, as determined by the Exchange on a class-by-class basis, and executed in $0.01 increments.

The Exchange states that if complex orders cannot be expressed in increments smaller than the increment for the class (such as $0.05), it may be difficult for brokers to obtain the desired prices for their customers' complex orders because the parties to a trade must perform complicated and time-consuming calculations to break down the orders into the required contract quantities and prices to fit within the constraint of executing the orders at a minimum increment other than $0.01.[11] In addition, the Exchange notes that the calculation process for larger-ratio complex orders is time-consuming because these orders generally are entered in large quantities with a large number of legs.[12] As a result, brokers executing larger-ratio complex orders on active trading days cannot be as efficient in representing other customer orders they are holding.[13] The Exchange states that the proposal to allow larger-ratio complex orders to be quoted and executed in $0.01 increments will provide market participants with flexibility in pricing their investment strategies and allow Trading Permit Holders (''TPHs'') to execute these orders more efficiently and at better prices for their customers.[14]

The proposal does not extend the complex order priority provisions applicable to complex orders with any ratio equal to or greater than one-to-three and less than or equal to three-to-one to complex orders with any ratio less than one-to-three or greater than three-to-one.[15] To apply to electronic

[1] 15 U.S.C. 78s(b)(1).

[2] 17 CFR 240.19b–4.

[3] The term ''complex order'' means an order involving the concurrent execution of two or more different series in the same underlying security or index (the ''legs'' or ''components'' of the complex order), for the same account, occurring at or near the same time and for the purpose of executing a particular investment strategy with no more than the applicable number of legs (which number the Exchange determines on a class-by-class basis). The Exchange determines in which classes complex orders are eligible for processing. Unless the context otherwise requires, the term complex order includes stock-option orders and security future-option orders. For purposes of Exchange Rules 5.33 and 5.85(b)(1), the term ''complex order'' means a complex order with any ratio equal to or greater than one-to-three (.333) and less than or equal to three-to-one (3.00), an Index Combo order, a stock-option order, or a security future-option order. For the purpose of applying these ratios to complex orders comprised of legs for both mini-options and standard options, ten mini-option contracts represent one standard option contract. For the purpose of applying these ratios to complex orders comprised of legs for both micro-options and standard options, 100 micro-option contracts represent one standard option contract. *See* Exchange Rule 1.1.

[4] *See* Securities Exchange Act Release No. 92709 (August 19, 2021), 86 FR 47529 (''Notice'').

[5] *See* letter to Vanessa Countryman, Secretary, Commission, from Alanna Barton, General Counsel, BOX Exchange LLC, dated September 14, 2021 (''BOX Letter''); and letter from Mary Smith, dated August 19, 2021 (''Smith Letter''). Comments received regarding the proposal are available on the Commission's website at: *https://www.sec.gov/comments/sr-cboe-2021-046/srcboe2021046.htm.*

[6] *See* letter to Vanessa Countryman, Secretary, Commission, from Laura G. Dickman, Vice President and Associate General Counsel, Cboe Options, dated September 23, 2021 (''Exchange Response''). The Exchange Response is available on the Commission's website at: *https://www.sec.gov/comments/sr-cboe-2021-046/srcboe2021046.htm.*

[7] 15 U.S.C. 78s(b)(2).

[8] *See* Securities Exchange Act Release No. 93159 (September 28, 2021), 86 FR 54780 (October 4, 2021). The Commission designated November 23, 2021, as the date by which the Commission shall approve or disapprove, or institute proceedings to determine whether to approve or disapprove, the proposed rule change.

[9] Amendment No. 1 revises the proposal to provide rationale for allowing complex orders with any ratio equal to or greater than one-to-three and less than or equal to three-to-one to trade electronically; provide data indicating that in August 2021, fewer than one third of the complex orders executed on the Exchange's trading floor had ratios of greater than three-to-one, so the significant majority of the approximately 25% of total executed non-SPX contracts (approximately 27% of total executed contracts) traded during that time would have been eligible to execute in $0.01 increments; and express the view that the rules of another options exchange do not clearly specify the minimum trading increment applicable to complex orders traded on that exchange's trading floor. Amendment No. 1 is available on the Commission's website at *https://www.sec.gov/comments/sr-cboe-2021-046/srcboe2021046.htm.*

[10] The minimum increment for bids and offers on complex orders in options on the S&P 500 Index (SPX) or on the S&P 100 Index (OEX and XEO), except for box/roll spreads, is $0.05 or greater, or any increment, which the Exchange may be determine on a class-by-class basis. *See* Exchange Rule 5.4(a).

[11] *See* Notice, 86 FR at 47530.

[12] *See* Exchange Response at 4.

[13] *See* Notice, 86 FR at 47530.

[14] *See id.* at 47530–1.

[15] *See* Notice, 86 FR at 47530. Exchange Rule 5.33(f)(2)(A)(v) currently provides that the Exchange's system does not execute a complex order (*i.e.,* a complex order with any ratio equal to or greater than one-to-three (.333) and less than or equal to three-to-one (3.00)) pursuant to Exchange Rule 5.33 at a net price that would cause any component of the complex strategy to be executed at a price ahead of a Priority Customer Order resting in the Simple Book without improving the BBO of at least one component of the complex strategy by at least one minimum increment. Exchange Rule

Continued

trading the priority provisions that currently apply to floor-traded complex orders with any ratio less than one-to-three or greater than three-to-one,[16] the proposal amends Exchange Rule 5.33(f)(2)(A)(v) to provide that a complex order that has any ratio less than one-to-three or greater than three-to-one will not execute at a net price that would cause any component of the complex strategy to be executed at a price ahead of a Priority Customer order on the Simple Book [17] without improving the BBO [18] of each component of the complex strategy with a Priority Customer order at the BBO.[19] As a result, the proposal will allow a complex order with any ratio less than one-to-three or greater than three-to-one to be executed at a net debit or credit price only if each leg of the order betters the corresponding bid (offer) of a Priority Customer order(s) in the Simple Book.[20]

The Exchange asserts that it is unlikely that market participants would submit orders with any ratio equal to or greater than one-to-three and less than or equal to three-to-one that is not a bona fide trading strategy solely for the purpose of trading in $0.01 increments.[21] First, the Exchange states that adding an extra leg to a large order to be able to improve the book by $0.01 would be unnecessary because the order could be executed in an AIM Auction in $0.01 increments.[22] Second, the Exchange states that it is unlikely that other market participants would be willing to execute against an order that is not a bona fide trading strategy, thereby reducing the likelihood that a market participant would be able to execute such a strategy.[23] Third, the Exchange notes that these orders would be subject to review by the Exchange's regulatory division, which could determine that the submission of such orders was in violation of the Exchange's rules, including Exchange Rule 8.1, which prohibits TPHs from engaging in acts or practices inconsistent with just and equitable principles of trade.[24]

Currently, the Exchange permits complex orders with any ratio less than one-to-three or greater than three-to-one to trade only on the Exchange's trading floor.[25] The Exchange proposes to allow these orders to be traded electronically, as well as in open outcry.[26] The Exchange states that electronic trading of these larger-ratio complex orders will provide investors with additional flexibility in executing these orders and will increase the investment strategies available to investors who prefer to or solely trade electronically.[27]

III. Summary of Comments and Exchange's Response

The Commission received two comment letters regarding the proposal.[28] One commenter stated that the proposal would solely benefit high-speed traders and result in worse prices for retail traders due to decreased quotes.[29]

The Exchange stated that the proposal is designed to increase the efficiency of trading larger-ratio, highly complex orders and is not intended to benefit high-speed traders.[30] The Exchange further stated that the proposal has minimal relevance to high-speed traders, who generally participate in listed options trading as market makers rather than as brokers conducting agency businesses.[31] The Exchange concluded that the proposal ''will have minimal impact on either high-speed traders or retail traders (or on the simple market), as it is intended to increase the efficiency and precision available to brokers attempting to execute highly complicated yet bona-fide multi-leg option strategies on the Exchange, which strategies are not common among high-speed traders or retail traders.'' [32] In addition, the Exchange noted that the proposal is unrelated to quoting and that the increased number of complex orders that would be eligible for more flexible pricing under the proposal could increase the number of complex orders entered on the Exchange that may leg into the Simple Book, thereby increasing execution opportunities for resting customer orders.[33]

Another commenter stated that, contrary to statements made in the proposal, each component leg of s of a multi-leg Qualified Open Outcry Order (''QOO'') on the BOX Exchange LLC's (''BOX'') trading floor respects the minimum trading increment for the series (*e.g.,* $0.01, $0.05, $0.10).[34] The commenter further stated that multi-leg QOO Orders do not meet the definition of Complex QOO Order and are treated like single-leg QOO Orders for purposes of execution and priority.[35]

In its response, the Exchange stated that multiple TPHs who are also members of BOX informed the Exchange that multi-legged orders with ratios greater than three-to-one or less than one-to-three are executed regularly on BOX's trading floor in penny increments.[36] The Exchange also expressed the view that BOX's rules lack clarity regarding the increments applicable to QOO Orders that do not satisfy the definition of a complex order in BOX Rule 7240(a)(7).[37]

IV. Discussion and Commission Findings

After careful review, the Commission finds that the proposed rule change, as modified by Amendment No. 1, is consistent with the requirements of the Act and the rules and regulations thereunder applicable to a national securities exchange.[38] In particular, the Commission finds that the proposed rule change is consistent with Section 6(b)(5) of the Act,[39] which requires, among other things, that the rules of a

5.85(b)(1) states that a complex order (A) with any ratio equal to or greater than one-to-three (.333) and less than or equal to three-to-one (3.00) or (B) that is an Index Combo order may be executed at a net debit or credit price without giving priority to equivalent bids (offers) in the individual series legs that are represented in the trading crowd or in the Book if the price of at least one leg of the order improves the corresponding bid (offer) of a Priority Customer order(s) in the Book by at least one minimum trading increment as set forth in Rule 5.4(b). Exchange Rule 5.85(b)(2).

[16] *See* Exchange Rule 5.85(b)(2) (stating that a complex order with any ratio less than one-to-three (.333) and greater than three-to-one (3.00) (except for an Index Combo order) may be executed in open outcry on the trading floor at a net debit or credit price without giving priority to equivalent bids (offers) in the individual series legs that are represented in the trading crowd or in the Book if each leg of the order betters the corresponding bid (offer) of a Priority Customer order(s) in the Book on each leg by at least one minimum trading increment as set forth in Rule 5.4(b)).

[17] The Simple Book is the electronic book of simple orders and quotes maintained by the System, which single book is used during both the Regular Trading Hours and Global Trading Hours trading sessions. *See* Exchange Rule 1.1.

[18] The BBO is the best bid or offer disseminated on the Exchange.

[19] Exchange Rule 5.33(f)(2)(A)(v) will continue to provide that a complex order that has any ratio equal to or greater than one-to-three and less than or equal to three-to-one, or an Index Combo order, will not execute at a net price that would cause any component of the complex strategy to be executed at a price ahead of a Priority Customer Order on the Simple Book without improving the BBO of at least one component of the complex strategy.

[20] *See* Notice, 86 FR at 47530.

[21] *See* Notice, 86 FR at 47531.

[22] *See id.*

[23] *See id.*

[24] *See id.*

[25] *See* Notice, 86 FR at 47529.

[26] *See id.* at n. 6.

[27] *See* Amendment No. 1 at 5.

[28] *See supra* note 5.

[29] *See* Smith Letter.

[30] *See* Exchange Response at 1–2.

[31] *See id.* at 2.

[32] *Id.* at 3–4.

[33] *See id.* at 2.

[34] *See* BOX Letter at 1.

[35] *See id.*

[36] *See* Exchange Response at 4.

[37] *See id.* at 4–5. *See also* Amendment No. 1 at 6–7.

[38] 15 U.S.C. 78f(b). In approving this proposed rule change, the Commission has considered the proposed rule's impact on efficiency, competition, and capital formation. *See* 15 U.S.C. 78c(f).

[39] 15 U.S.C. 78f(b)(5).

national securities exchange be designed to prevent fraudulent and manipulative acts and practices, to promote just and equitable principles of trade, to remove impediments to and perfect the mechanism of a free and open market and a national market system, and, in general, to protect investors and the public interest, and not be designed to permit unfair discrimination between customers, issuers, brokers or dealers. The proposal to allow complex orders with a with any ratio less than one-to-three or greater than three-to-one to be quoted and executed in $0.01 increments could provide market participants with flexibility in pricing these orders and allow TPHs to execute their customers' orders in these larger-ratio strategies at better prices. The proposal to allow complex orders with any ratio less than one-to-three or greater than three-to-one to trade electronically could provide market participants with flexibility in executing these orders by providing an additional means for trading them. The proposal will protect the priority of Priority Customer orders resting on the Simple Book by requiring each component of a complex order with a ratio less than one-to-three or greater than three-to-one to execute at a price that improves the BBO of each component of the order with a Priority Customer order at the BBO.[40]

The Commission does not believe that the proposal will solely benefit high-speed traders and result in worse prices for retail traders due to decreased quotes. As noted above, the proposal will provide all market participants, including retail customers, with greater flexibility both in pricing complex orders with any ratio less than one-to-three or greater than three-to-one, and in executing these orders, which will be allowed to trade electronically as well as on the Exchange's floor. With respect to the second comment letter, the Commission notes that in approving this proposal it is not relying on statements made in the proposal or in any comment letters regarding BOX's trading floor.

Finally, unlike the trading systems of some options exchanges, Cboe's trading system does not generate legging orders on behalf of complex orders. A legging order (sometimes called a derived order) is an exchange-generated single-leg limit order on the exchange's limit order book that represents either the bid or the offer of one component of a complex order resting on the exchange's complex order book. In general, a legging order is generated at a price: (i) That matches or improves upon the best displayed bid or offer on the exchange's single-leg limit order book; and (ii) at which the net price of the complex order can be achieved when the other leg is executed against the best displayed bid or offer on the exchange's single-leg limit order book.[41] If an exchange generated legging orders in $0.01 increments on behalf of complex orders with any ratio less than one-to-three or greater than three-to-one in a class with a standard trading increment of $0.05, a complex order priced in a $0.01 increment could generate a legging order at a price that would not be available to market participants trading single-leg orders.[42] If an options market that generates legging orders in $0.01 increments regardless of the trading increment for the class wished to allow complex orders with a ratio less than one-to-three or greater than three-to-one to trade in $0.01 increments, the inability of single-leg orders to compete on a level playing field with the legging orders generated on behalf of these complex orders could raise regulatory concerns.

V. Solicitation of Comments on Amendment No. 1 to the Proposed Rule Change

Interested persons are invited to submit written data, views, and arguments concerning whether Amendment No. 1 is consistent with the Act. Comments may be submitted by any of the following methods:

Electronic Comments

- Use the Commission's internet comment form (*http://www.sec.gov/rules/sro.shtml*); or
- Send an email to *rule-comments@sec.gov.* Please include File Number SR–CBOE–2021–046 on the subject line.

Paper Comments

- Send paper comments in triplicate to Secretary, Securities and Exchange Commission, 100 F Street NE, Washington, DC 20549–1090.

All submissions should refer to File Number SR–CBOE–2021–046. This file number should be included on the subject line if email is used. To help the Commission process and review your comments more efficiently, please use only one method. The Commission will post all comments on the Commission's internet website (*http://www.sec.gov/rules/sro.shtml*). Copies of the submission, all subsequent amendments, all written statements with respect to the proposed rule change that are filed with the Commission, and all written communications relating to the proposed rule change between the Commission and any person, other than those that may be withheld from the public in accordance with the provisions of 5 U.S.C. 552, will be available for website viewing and printing in the Commission's Public Reference Room, 100 F Street NE, Washington, DC 20549, on official business days between the hours of 10:00 a.m. and 3:00 p.m. Copies of the filing also will be available for inspection and copying at the principal office of the Exchange. All comments received will be posted without change. Persons submitting comments are cautioned that we do not redact or edit personal identifying information from comment submissions. You should submit only information that you wish to make available publicly. All submissions should refer to File Number SR–CBOE–2021–046, and should be submitted on or before March 8, 2022.

VI. Accelerated Approval of Proposed Rule Change, as Modified by Amendment No. 1

The Commission finds good cause to approve the proposed rule change, as modified by Amendment No. 1, prior to the thirtieth day after the date of publication of notice of the filing of Amendment No. 1 in the **Federal Register**. Amendment No. 1 provides rationale for allowing complex orders with any ratio equal to or greater than one-to-three and less than or equal to three-to-one to trade electronically. In addition, Amendment No. 1 provides data indicating that in August 2021, fewer than one third of the complex orders executed on the Exchange's trading floor had ratios of greater than three-to-one, so the significant majority of the approximately 25% of total

[40] *See* proposed Exchange Rule 5.33(f)(2)(A)(v). This requirement is consistent with Exchange Rule 5.85(b)(2), which provides that a complex order with any ratio less than one-to-three (.333) and greater than three-to-one (3.00) (except for an Index Combo order) may be executed in open outcry on the trading floor at a net debit or credit price without giving priority to equivalent bids (offers) in the individual series legs that are represented in the trading crowd or in the Book if each leg of the order betters the corresponding bid (offer) of a Priority Customer order(s) in the Book on each leg by at least one minimum trading increment as set forth in Exchange Rule 5.4(b).

[41] *See e.g.,* BOX Rule 7240(c); ISE Rule Options 3, Section 7(k); and MIAX Rule 518(a)(9).

[42] For example, if such an exchange received a complex order to buy series A and Series B at a net price of $2.13, and there was an order on the exchange's single-leg book to sell series B for $1.05, the exchange's system could generate a legging order to sell series A for $1.08. If the quoting and trading increment for the class is $0.05, then a market participant that entered a single-leg order to sell series A would be required to enter its order in a pricing increment of $0.05 and would not be able to match, or better, the legging order's price by entering its order in a $0.01 increment.

executed non-SPX contracts (approximately 27% of total executed contracts) traded during that time would have been eligible to execute in $0.01 increments. Amendment No. 1 raises no novel regulatory issues and provides additional analysis that assists the Commission in evaluating the Exchange's proposal and determining that it is consistent with the Act. Accordingly, the Commission finds good cause, pursuant to Section 19(b)(2) of the Act,[43] to approve the proposed rule change, as modified by Amendment No. 1, on an accelerated basis.

VII. Conclusion

It is therefore ordered, pursuant to Section 19(b)(2) of the Act,[44] that the proposed rule change (SR–CBOE–2021–046), as modified by Amendment No. 1, is approved on an accelerated basis.

For the Commission, by the Division of Trading and Markets, pursuant to delegated authority.[45]

J. Matthew DeLesDernier,

Assistant Secretary.

[FR Doc. 2022–03142 Filed 2–14–22; 8:45 am]

BILLING CODE 8011–01–P

[43] 15 U.S.C. 78s(b)(2).

[44] 15 U.S.C. 78s(b)(2).

[45] 17 CFR 200.30–3(a)(12).

SECURITIES AND EXCHANGE COMMISSION

[Release No. 34–94202; File No. SR–CboeBZX–2021–052]

Self-Regulatory Organizations; Cboe BZX Exchange, Inc.; Notice of Designation of a Longer Period for Commission Action on Proceedings To Determine Whether To Approve or Disapprove a Proposed Rule Change To List and Trade Shares of the Global X Bitcoin Trust Under BZX Rule 14.11(e)(4), Commodity-Based Trust Shares

February 9, 2022.

On August 3, 2021, Cboe BZX Exchange, Inc. (''BZX'' or ''Exchange'') filed with the Securities and Exchange Commission (''Commission''), pursuant to Section 19(b)(1) of the Securities Exchange Act of 1934 (''Act'')[1] and Rule 19b–4 thereunder,[2] a proposed rule change to list and trade shares of the Global X Bitcoin Trust under BZX Rule 14.11(e)(4), Commodity-Based Trust Shares. The proposed rule change was published for comment in the **Federal Register** on August 23, 2021.[3]

On September 29, 2021, pursuant to Section 19(b)(2) of the Act,[4] the Commission designated a longer period within which to approve the proposed rule change, disapprove the proposed rule change, or institute proceedings to determine whether to disapprove the proposed rule change.[5] On November 18, 2021, the Commission instituted proceedings under Section 19(b)(2)(B) of the Act[6] to determine whether to approve or disapprove the proposed rule change.[7]

Section 19(b)(2) of the Act[8] provides that, after initiating proceedings, the Commission shall issue an order approving or disapproving the proposed rule change not later than 180 days after the date of publication of notice of filing of the proposed rule change. The Commission may extend the period for issuing an order approving or disapproving the proposed rule change, however, by not more than 60 days if the Commission determines that a longer period is appropriate and publishes the reasons for such determination. The proposed rule change was published for comment in the **Federal Register** on August 23, 2021.[9] The 180th day after publication of the proposed rule change is February 19, 2022. The Commission is extending the time period for approving or disapproving the proposed rule change for an additional 60 days.

The Commission finds that it is appropriate to designate a longer period within which to issue an order approving or disapproving the proposed rule change so that it has sufficient time to consider the proposed rule change and the issues raised in the comments that have been submitted in connection therewith. Accordingly, the Commission, pursuant to Section 19(b)(2) of the Act,[10] designates April 20, 2022, as the date by which the Commission shall either approve or disapprove the proposed rule change (File No. SR–CboeBZX–2021–052).

For the Commission, by the Division of Trading and Markets, pursuant to delegated authority.[11]

J. Matthew DeLesDernier,

Assistant Secretary.

[FR Doc. 2022–03139 Filed 2–14–22; 8:45 am]

BILLING CODE 8011–01–P

[1] 15 U.S.C. 78s(b)(1).

[2] 17 CFR 240.19b–4.

[3] *See* Securities Exchange Act Release No. 92689 (Aug. 17, 2021), 86 FR 47176. Comments on the proposed rule change can be found at: *https://www.sec.gov/comments/sr-cboebzx-2021-052/srcboebzx2021052.htm.*

[4] 15 U.S.C. 78s(b)(2).

[5] *See* Securities Exchange Act Release No. 93174, 86 FR 55043 (Oct. 5, 2021). The Commission designated November 21, 2021, as the date by which it should approve, disapprove, or institute proceedings to determine whether to disapprove the proposed rule change.

[6] 15 U.S.C. 78s(b)(2)(B).

[7] *See* Securities Exchange Act Release No. 93608, 86 FR 67094 (Nov. 24, 2021).

[8] 15 U.S.C. 78s(b)(2).

[9] *See supra* note 3 and accompanying text.

[10] 15 U.S.C. 78s(b)(2).

[11] 17 CFR 200.30–3(a)(57).

SMALL BUSINESS ADMINISTRATION

[Docket No.: SBA–2021–0012]

Small Business Size Standards: Termination of Nonmanufacturer Rule Class Waiver

AGENCY: U.S. Small Business Administration.

ACTION: Notice of intent to terminate the class waiver to the Nonmanufacturer Rule.

SUMMARY: The U.S. Small Business Administration (SBA) is considering terminating a class waiver of the Nonmanufacturer Rule (NMR) for Furniture Frames and Parts, Metal, Manufacturing under NAICS code 337215 and PSC 7195; Furniture Frames, Wood, Manufacturing under NAICS code 337215 and PSC 7195; Furniture Parts, Finished Plastics, Manufacturing under NAICS code 33725 and PSC 7195; Furniture, Factory-type (*e.g.,* cabinets, stools, tool stands, work benches), Manufacturing under NAICS code 337127 and PSC 7110; Furniture, Hospital (*e.g.,* hospital beds, operating room furniture) Manufacturing under NAICS code 339113 and PSC 7195; and Furniture, Laboratory-type (*e.g.,* benches, cabinets, stools, tables) Manufacturing under NAICS code 339113 and PSC 7195.

DATES: Comments and source information must be submitted on or before 03/09/2022.

ADDRESSES: You may submit comments and source information via the Federal Rulemaking Portal at *https://www.regulations.gov* under Docket ID SBA–2021–0012. If you wish to submit confidential business information (CBI) as defined in the User Notice at *https://www.regulations.gov,* please submit the information to Carol Hulme, Attorney Advisor, Office of Government Contracting, U.S. Small Business Administration, 409 Third Street SW, 8th Floor, Washington, DC 20416. Highlight the information that you consider to be CBI and explain why you believe this information should be held confidential. SBA will review the information and make a final determination as to whether the information will be published.

FOR FURTHER INFORMATION CONTACT: Carol Hulme, Program Analyst, by telephone at 202–205–6347; or by email at *Carol-Ann.Hulme@sba.gov.*

SUPPLEMENTARY INFORMATION: On October 6, 2019, SBA received a request to terminate the current class waiver of the NMR for the products identified above. According to the request, there are small business manufacturers available to participate in the Federal marketplace for these products. According to the information the requester provided to the SBA, several small manufacturers have provided these products to the Federal agencies within the past 24 months.

Based on this information, the SBA is seeking comment on the termination of the class waiver for Furniture Frames and Parts, Metal, Manufacturing under NAICS code 337215 and PSC 7195; Furniture Frames, Wood, Manufacturing under NAICS code 337215 and PSC 7195; Furniture Parts, Finished Plastics, Manufacturing under NAICS code 33725 and PSC 7195; Furniture, Factory-type (*e.g.,* cabinets, stools, tool stands, work benches), Manufacturing under NAICS code 337127 and PSC 7110; Furniture, Hospital (*e.g.,* hospital beds, operating room furniture) Manufacturing under NAICS code 339113 and PSC 7195; and Furniture, Laboratory-type (*e.g.,* benches, cabinets, stools, tables) Manufacturing under NAICS code 339113 and PSC 7195.

An awardee of a Federal small business set-aside contract valued over $250,000.00, service-disabled veteran-owned small business contract, HUBZone contract, women-owned small business contract, or 8(a) contract must provide its own product or that of a small business manufacturer unless a waiver is in place. If the above-identified class waiver is terminated, small businesses will no longer be authorized to provide the product of any manufacturer regardless of size on the identified items, unless a Federal Contracting Officer obtains an individual waiver to the NMR.

Sections 8(a)(17) and 46 of the Small Business Act (Act), 15 U.S.C. 637(a)(17) and 657, and SBA's implementing regulations require that recipients of Federal supply contracts (except those valued between $3,500 and $250,000) set aside for small business, service-disabled veteran-owned small business (SDVOSB), women-owned small business (WOSB), economically disadvantaged women-owned small business (EDWOSB), or participants in the SBA's 8(a) Business Development (BD) program provide the product of a small business manufacturer or processor, if the recipient is other than the actual manufacturer or processor of the product. This requirement is commonly referred to as the Nonmanufacturer Rule (NMR). 13 CFR 121.406(b). Sections 8(a)(17)(B)(iv)(II) and 46(a)(4)(B) of the Act authorize SBA to waive the NMR for a ''class of products'' for which there are no small business manufacturers or processors available to participate in the Federal market.

As implemented in SBA's regulations at 13 CFR 121.1202(c), in order to be considered available to participate in the Federal market for a class of products, a small business manufacturer must have submitted a proposal for a contract solicitation or been awarded a contract to supply the class of products within the last 24 months.

In accordance with the SBA's regulations at 13 CFR 121.1204(a)(7), SBA will periodically review existing class waivers to the NMR to determine whether small business manufacturers or processors have become available to participate in the Federal market. Upon receipt of information that such a small business manufacturer or processor exists, the SBA will announce its intent to terminate the NMR waiver for a class of products. 13 CFR 121.1204(a)(7)(ii). Unless public comment reveals no small business exists for the class of products in question, SBA will publish a Final Notice of Termination in the **Federal Register**.

On June 27, 2006, SBA issued a Notice of Intent to waive the NMR for Furniture Frames and Parts, Metal, Manufacturing under NAICS code 337215 and PSC 7195; Furniture Frames, Wood, Manufacturing under NAICS code 337215 and PSC 7195; Furniture Parts, Finished Plastics, Manufacturing under NAICS code 33725 and PSC 7195; Furniture, Factory-type (*e.g.,* cabinets, stools, tool stands, work benches), Manufacturing under NAICS code 337127 and PSC 7110; Furniture, Hospital (*e.g.,* hospital beds, operating room furniture) Manufacturing under NAICS code 339113 and PSC 7195; and Furniture, Laboratory-type (*e.g.,* benches, cabinets, stools, tables) Manufacturing under NAICS code 339113 and PSC 7195. After the comment and notice period passed, SBA issued a class waiver for those products.

On October 6, 2019, SBA received a request to terminate the previously issued waiver. The requester provided information that established the existence of small business manufacturers of the identified products. These small businesses have submitted bids on Federal solicitations within the past 24 months. Thus SBA is proposing to terminate the class waiver for Furniture Frames and Parts, Metal, Manufacturing under NAICS code 337215 and PSC 7195; Furniture Frames, Wood, Manufacturing under NAICS code 337215 and PSC 7195; Furniture Parts, Finished Plastics, Manufacturing under NAICS code 33725 and PSC 7195; Furniture, Factory-type (*e.g.,* cabinets, stools, tool stands, work benches), Manufacturing under NAICS code 337127 and PSC 7110; Furniture, Hospital (*e.g.,* hospital beds, operating room furniture) Manufacturing under NAICS code 339113 and PSC 7195; and Furniture, Laboratory-type (*e.g.,* benches, cabinets, stools, tables) Manufacturing under NAICS code 339113 and PSC 7195.

The public is invited to comment or provide source information on the proposed termination of the NMR waiver for these products. More information on the NMR and class waivers can be found at Nonmanufacturer rule (*sba.gov*).

Wallace D. Sermons, II,

Acting Director, Office of Government Contracting.

[FR Doc. 2022–03201 Filed 2–14–22; 8:45 am]

BILLING CODE P

SMALL BUSINESS ADMINISTRATION

[Disaster Declaration #17338 and #17339; Colorado Disaster Number CO–00137]

Presidential Declaration of a Major Disaster for Public Assistance Only for the State of Colorado

AGENCY: Small Business Administration.

ACTION: Notice.

SUMMARY: This is a Notice of the Presidential declaration of a major disaster for Public Assistance Only for the State of Colorado (FEMA–4634–DR), dated 02/09/2022.

Incident: Wildfires and Straight-line Winds.

Incident Period: 12/30/2021 through 01/07/2022.

DATES: Issued on 02/09/2022.

Physical Loan Application Deadline Date: 04/11/2022.

Economic Injury (EIDL) Loan Application Deadline Date: 11/09/2022.

ADDRESSES: Submit completed loan applications to: U.S. Small Business Administration, Processing and Disbursement Center, 14925 Kingsport Road, Fort Worth, TX 76155.

FOR FURTHER INFORMATION CONTACT: A. Escobar, Office of Disaster Assistance, U.S. Small Business Administration,

409 3rd Street SW, Suite 6050, Washington, DC 20416, (202) 205–6734.

SUPPLEMENTARY INFORMATION: Notice is hereby given that as a result of the President's major disaster declaration on 02/09/2022, Private Non-Profit organizations that provide essential services of a governmental nature may file disaster loan applications at the address listed above or other locally announced locations.

The following areas have been determined to be adversely affected by the disaster:

Primary Counties: Boulder.

The Interest Rates are:

	Percent
For Physical Damage:	
Non-Profit Organizations with Credit Available Elsewhere ...	1.875
Non-Profit Organizations without Credit Available Elsewhere	1.875
For Economic Injury:	
Non-Profit Organizations without Credit Available Elsewhere	1.875

The number assigned to this disaster for physical damage is 17338 5 and for economic injury is 17339 0.

(Catalog of Federal Domestic Assistance Number 59008)

Barbara Carson,

Acting Associate Administrator for Disaster Assistance.

[FR Doc. 2022–03186 Filed 2–14–22; 8:45 am]

BILLING CODE 8026–03–P

SMALL BUSINESS ADMINISTRATION

[Docket No.: SBA–2020–0048]

Termination of Nonmanufacturer Rule Class Waiver

AGENCY: U.S. Small Business Administration.

ACTION: Notification of intent to terminate the class waiver to the Nonmanufacturer Rule for radiology equipment.

SUMMARY: The U.S. Small Business Administration (SBA) is considering terminating a class waiver of the Nonmanufacturer Rule (NMR) for irradiation apparatus manufacturing, computerized axial tomography (CT/CAT) scanners manufacturing; CT/CAT (computerized axial tomography) scanners manufacturing; fluoroscopes manufacturing; fluoroscopic X-ray apparatus and tubes manufacturing; generators, X-ray, manufacturing; irradiation equipment manufacturing; X-ray generators manufacturing; and X-ray irradiation equipment manufacturing under manufacturing categorized under North American Industry Classification System (NAICS) code 334517 and Product Service Code (PSC) 6525. An awardee of a Federal small business set-aside contract valued over $250,000.00, service-disabled veteran-owned small business contract, HUBZone contract, women-owned small business contract, or 8(a) contract must provide its own product or that of a small business manufacturer unless a waiver is in place. If the above-identified class waiver is terminated, small businesses will no longer be authorized to provide the product of any manufacturer regardless of size on the identified items, unless a Federal contracting officer obtains an individual waiver to the NMR.

DATES: Comments and source information must be submitted on or before 03/09/2022.

ADDRESSES: You may submit comments and source information via the Federal Rulemaking Portal at *https://www.regulations.gov* under Docket ID SBA–2020–0048. If you wish to submit confidential business information (CBI) as defined in the User Notice at *https://www.regulations.gov,* please submit the information to Carol Hulme, Attorney Advisor, Office of Government Contracting, U.S. Small Business Administration, 409 Third Street SW, 8th Floor, Washington, DC 20416. Highlight the information that you consider to be CBI and explain why you believe this information should be held confidential. SBA will review the information and make a final determination as to whether the information will be published.

FOR FURTHER INFORMATION CONTACT: Carol Hulme, Attorney Advisor, by telephone at 202–205–6347 or by email at *Carol-Ann.Hulme@sba.gov.*

SUPPLEMENTARY INFORMATION: Section 8(a)(17) and 46 of the Small Business Act (Act), 15 U.S.C. 637(a)(17) and 657s, and SBA's implementing regulations, found at 13 CFR 121.406(b), require that recipients of Federal supply contracts issued as a small business set-aside (except as stated below), service-disabled veteran-owned small business (SDVO SB) set-aside or sole source contract, Historically Underutilized Business Zone (HUBZone) set-aside or sole source contract, WOSB (women-owned small business) or economically disadvantaged women-owned small business (EDWOSB) set-aside or sole source contract, 8(a) set-aside or sole source contract, partial set-aside, or set aside of an order against a multiple award contract provide the product of a small business manufacturer or processor if the recipient is other than the actual manufacturer or processor of the product. This requirement is commonly referred to as the Nonmanufacturer Rule (NMR). 13 CFR 121.406(b). Note that the NMR does not apply to small business set-aside acquisitions with an estimated value between the micro-purchase threshold and the simplified acquisition threshold but continues to apply to socioeconomic categories over the micropurchase threshold.

Sections 8(a)(17)(B)(iv)(II) and 46(a)(4)(B) of the Act authorize SBA to waive the NMR for a ''class of products'' for which there are no small business manufacturers or processors available to participate in the Federal market. The SBA defines ''class of products'' based on a combination of (1) the six-digit NAICS code, (2) the four-digit PSC, and (3) a description of the class of products. As implemented in SBA's regulations at 13 CFR 121.1202(c), in order to be considered available to participate in the Federal market for a class of products, a small business manufacturer must have submitted a proposal for a contract solicitation or been awarded a contract to supply the class of products within the last 24 months.

In accordance with the SBA's regulations at 13 CFR 121.1204(a)(7), SBA will periodically review existing class waivers to the NMR to determine whether small business manufacturers or processors have become available to participate in the Federal market. Upon receipt of information that such a small business manufacturer or processor exists, the SBA will announce its intent to terminate the NMR waiver for a class of products. 13 CFR 121.1204(a)(7)(ii). Unless public comment reveals no small business exists for the class of products in question, SBA will publish a Final Notice of Termination in the **Federal Register**.

On October 31, 2007, the SBA published in the **Federal Register** a notice of intent to waiver the Nonmanufacturer Rule for Irradiation Apparatus Manufacturing (X-Ray Equipment and Supplies). The comments submitted in response failed to establish the existence of a small business manufacturer of these products. As such, on December 26, 2007, after the comment and notice period passed, SBA issued a class waiver for those products effective January 10, 2008. That notice can be found at 77 FR 73057.

On April 20, 2020, SBA received a request to terminate the previously issued waiver. The requester provided information that established the

existence of a small business manufacturer of the identified products. Thus, SBA is proposing to terminate the class waiver for irradiation apparatus manufacturing, computerized axial tomography (CT/CAT) scanners manufacturing; CT/CAT (computerized axial tomography) scanners manufacturing; fluoroscopes manufacturing; fluoroscopic X-ray apparatus and tubes manufacturing; generators, X-ray, manufacturing; irradiation equipment manufacturing; X-ray generators manufacturing; and X-ray irradiation equipment manufacturing under NAICS code 334517 and PSC 6525. The public is invited to comment or provide source information on the proposed termination of the NMR waiver for these products.

More information on the NMR and class waivers can be found at Nonmanufacturer rule (*sba.gov*).

Wallace D. Sermons, II,

Acting Director, Office of Government Contracting.

[FR Doc. 2022–03202 Filed 2–14–22; 8:45 am]

BILLING CODE P

DEPARTMENT OF TRANSPORTATION

Federal Aviation Administration

Docket No. FAA–2022–0201]

Agency Information Collection Activities: Requests for Comments; Clearance of Renewed Approval of Information Collection: Certification: Pilots and Flight Instructors

AGENCY: Federal Aviation Administration (FAA), DOT.

ACTION: Notice and request for comments.

SUMMARY: In accordance with the Paperwork Reduction Act of 1995, FAA invites public comments about our intention to request Office of Management and Budget (OMB) approval to renew an information collection. FAA regulations prescribe certification standards for pilots, flight instructors, and ground instructors. The information collected is used to determine compliance with applicant eligibility.

DATES: Written comments should be submitted by April 18, 2022.

ADDRESSES: Send comments to the FAA at the following address: Dwayne C. Morris, Federal Aviation Administration, 800 Independence Ave. SW, Washington, DC 20591; email: *chris.morris@faa.gov.*

Public Comments Invited: You are asked to comment on any aspect of this information collection, including (a) Whether the proposed collection of information is necessary for FAA's performance; (b) the accuracy of the estimated burden; (c) ways for FAA to enhance the quality, utility and clarity of the information collection; and (d) ways that the burden could be minimized without reducing the quality of the collected information. The agency will summarize and/or include your comments in the request for OMB's clearance of this information collection.

FOR FURTHER INFORMATION CONTACT: Jean Hardy by email at: *jean.hardy@faa.gov.* phone: 207–289–7287.

SUPPLEMENTARY INFORMATION:

OMB Control Number: 2120–0021.

Title: Certification: Pilots and Flight Instructors.

Form Numbers: 8710–1, 8710–13.

Type of Review: This is a renewal of an existing information collection.

Background: Persons applying for an airman certificate under part 61 are mandated to report information using the Airman certificate and/or Rating Application form and the required records, logbooks and statements to the Federal Aviation Administration (FAA) Flight Standards District Offices or its representatives on occasion. This information is used to determine qualifications of the applicant for issuance of a pilot or instructor certificate, or rating or authorization. The FAA estimates that there are approximately 825,000 active certificated pilot airmen. This includes student, private, commercial, airline transport pilot certificate holders, as well as ground and flight instructors. Approximately 25% of these pilots are providing data on an annual basis. Instructor certificates must be renewed every 24 months to remain effective. If the information collection were not conducted, the FAA would be unable to issue the appropriate certificates and ratings. Persons applying for a remote pilot certificate with a small UAS rating under part 107, are mandated to report information using the FAA Form 8710–13, Remote Pilot Certificate and/or Rating Application. For applicants who do not hold a pilot certificate under part 61, the Remote Pilot Certificate and/or Rating Application is submitted along with a documentation demonstrating that the applicant passed an aeronautical knowledge test. For applicants who hold a pilot certificate under part 61 and meet the flight review requirements of § 61.56, the Remote Pilot Certificate and/or Rating Application is submitted with evidence of completion of the training program is estimated to be approximately 25 percent of the population of active certificated pilots and instructors. Given a population of 825,000, the result is approximately 206,250 respondents providing data on an annual basis. The total number of applicants for a remote pilot certificate with a small UAS rating is estimated to be 39,229 annually.

Frequency: As needed.

Estimated Average Burden per Response: For the hour burdens resulting from the application requirements of the collection of information other than remote pilots with small UAS ratings, the FAA estimates that forms are submitted for these certificates and ratings at an average preparation time of 15 minutes (0.25 hrs) each. The average time estimate of 0.25 hours assumes that many individual applicants will submit an 8710–1 form more than once for various reasons, and that most of the information provided on the form likely will not have changed. For Part 107 we estimate that an average of 39,229 forms are submitted annually that require an average preparation time of 0.25 hours to complete.

Estimated Total Annual Burden: The total number of annual responses for the airman certification program is estimated to be 1,171,0405. The FAA estimates the total reporting burden hours to be 43,157 hours. The FAA estimates the total recordkeeping burden hours to be 282,329 hours. The FAA estimates the burden for the collection of information to be 325,486 hours annually.

Issued in Washington, DC, on February 9, 2022.

Dwayne C. Morris,

Project Manager, Flight Standards Service.

[FR Doc. 2022–03196 Filed 2–14–22; 8:45 am]

BILLING CODE 4910–13–P

DEPARTMENT OF TRANSPORTATION

Federal Highway Administration

[FHWA Docket No. FHWA–2020–0014]

Surface Transportation Project Delivery Program; Alaska Department of Transportation and Public Facilities Third Audit Report

AGENCY: Federal Highway Administration (FHWA), U.S. Department of Transportation (DOT).

ACTION: Notice.

SUMMARY: The Moving Ahead for Progress in the 21st Century Act (MAP–21) established the Surface Transportation Project Delivery Program

that allows a State to assume FHWA's environmental responsibilities for environmental review, consultation, and compliance under the National Environmental Policy Act (NEPA) and related environmental authorities for Federal highway projects. When a State assumes these Federal responsibilities, the State becomes solely responsible and liable for carrying out the responsibilities it has assumed, in lieu of FHWA. This program mandates annual audits during each of the first four years of State participation to ensure compliance with program requirements. This notice announces the availability of the third audit report for the Alaska Department of Transportation and Public Facilities (DOT&PF).

FOR FURTHER INFORMATION CONTACT: Mr. David T. Williams, Office of Project Development and Environmental Review, (202) 366–5074, *David.Williams@dot.gov,* or Mr. Patrick Smith, Office of the Chief Counsel, 202–366–1345, *Patrick.C.Smith@dot.gov;* Federal Highway Administration, U.S. Department of Transportation, 1200 New Jersey Avenue SE, Washington, DC 20590. Office hours are from 8:00 a.m. to 4:30 p.m., E.T., Monday through Friday, except Federal holidays.

SUPPLEMENTARY INFORMATION:

Electronic Access

An electronic copy of this notice and the final audit report may be downloaded from the specific docket page at *www.regulations.gov,* from the Office of the Federal Register's website at *www.FederalRegister.gov,* or from the Government Publishing Office's website at *www.GovInfo.gov.*

Background

The Surface Transportation Project Delivery Program, codified at 23 U.S.C. 327, commonly known as the NEPA Assignment Program, allows a State to assume FHWA's responsibilities for environmental review, consultation, and compliance for Federal highway projects. When a State assumes these Federal responsibilities, the State becomes solely liable for carrying out the responsibilities it has assumed, in lieu of FHWA. The DOT&PF published its application for NEPA assignment on May 1, 2016, and made it available for public comment for 30 days. After considering public comments, DOT&PF submitted its application to FHWA on July 12, 2016. The application served as the basis for developing a memorandum of understanding (MOU) that identified the responsibilities and obligations that DOT&PF would assume. The FHWA published a notice of the draft MOU in the **Federal Register** on August 25, 2017 (82 FR 40625), with a 30-day comment period to solicit the views of the public and Federal Agencies. After the close of the comment period, FHWA and DOT&PF considered comments and proceeded to execute the MOU. Effective November 13, 2017, DOT&PF assumed FHWA's responsibilities under NEPA, and the responsibilities for NEPA-related Federal environmental laws described in the MOU.

Section 327(g) of title 23, U.S.C., requires the Secretary to conduct annual audits to ensure compliance with the MOU during each of the first 4 years of State participation and, after the fourth year, monitor compliance. FHWA must make the results of each audit available for public comment. FHWA published a notice in the **Federal Register** for a draft audit report on December 7, 2020 (85 FR 78914), soliciting comments for 30 days pursuant to 23 U.S.C. 327(g). FHWA received comments on the draft audit report from the American Road & Transportation Builders Association (ARTBA). The ARTBA's comments were supportive of the Surface Transportation Project Delivery Program and did not relate specifically to the audit. The team has considered these comments in finalizing this audit report. This notice makes available the final audit report of DOT&PF's third audit under the program. The final audit report is available for download at *www.regulations.gov* under [FHWA Docket No. FHWA–2020–0014].

Authority: Section 1313 of Public Law 112–141; Section 6005 of Public Law 109–59; 23 U.S.C 327; 23 CFR part 773.

Stephanie Pollack,

Deputy Administrator, Federal Highway Administration.

Surface Transportation Project Delivery Program, FHWA's Audit of the Alaska Department of Transportation

April 6–10, 2020

Executive Summary

This report summarizes the results of the Federal Highway Administration's (FHWA) third audit of the Alaska Department of Transportation and Public Facilities' (DOT&PF) assumption of FHWA's project-level National Environmental Policy Act (NEPA) responsibilities and obligations pursuant to a 23 U.S.C. 327 Memorandum of Understanding (MOU). The DOT&PF entered the NEPA Assignment Program after more than 8 years of experience making FHWA NEPA Categorical Exclusion (CE) determinations pursuant to 23 U.S.C. 326 (beginning September 22, 2009).

Alaska's MOU became effective on November 13, 2017. Currently, FHWA's NEPA responsibilities in Alaska include the oversight and auditing of the DOT&PF's execution of the NEPA Assignment Program and certain activities excluded from the MOU, such as the NEPA reviews of projects advanced by direct recipients other than the DOT&PF.

The FHWA audit team began to prepare for a site visit in November 2019. The audit team reviewed DOT&PF's NEPA project files, DOT&PF's response to FHWA's pre-audit information request (PAIR), and considered DOT&PF's Self-Assessment Report. On April 6–10, 2020, the audit team conducted a completely virtual site visit rather than its traditional in-person site visit due to COVID–19 pandemic travel restrictions.

The audit team appreciates DOT&PF's responsiveness to questions regarding the status of general observations from the second audit. This third audit report concludes with a status update for FHWA's observations from the second audit report.

The audit team finds DOT&PF in substantial compliance with the terms of the MOU in meeting the responsibilities it has assumed. This report does not identify any non-compliance observations; it does identify two general observations and three successful practices.

Background

The NEPA Assignment Program allows a State to assume FHWA's responsibilities for environmental review, consultation, and compliance for highway projects. This program is codified at 23 U.S.C. 327. When a State assumes these Federal responsibilities for NEPA project decisionmaking, the State becomes solely responsible and solely liable for carrying out these obligations in lieu of and without further NEPA-related approval by FHWA.

The FHWA assigned responsibility for making project NEPA approvals and other related environmental decisions for highway projects to DOT&PF through an MOU on November 13, 2017. The MOU documents these responsibilities. Examples of responsibilities DOT&PF has assumed in addition to NEPA include Section 7 consultation under the Endangered Species Act and consultation under Section 106 of the National Historic Preservation Act.

This is the third of four required annual audits pursuant to 23 U.S.C.

327(g) and Part 11 of the MOU. FHWA uses audits as the primary mechanism to oversee DOT&PF's compliance with the MOU and the NEPA Assignment Program requirements. This includes ensuring compliance with applicable Federal laws and policies, evaluating DOT&PF's progress toward achieving the performance measures identified in Section 10.2 of the MOU, and collecting information needed for the Secretary's annual report to Congress. FHWA must present its audit results in a report and make it available for public comment in the **Federal Register**.

The audit team included NEPA subject matter experts from the FHWA Alaska Division Office, the Chief Counsel's Office, the Resource Center, and the Headquarters Offices of Project Development & Environmental Review and Infrastructure.

Scope and Methodology

The audit team examined a sample of DOT&PF's NEPA project files, DOT&PF responses to the PAIR, and DOT&PF's Self-Assessment Report. The audit team also interviewed resource agencies and DOT&PF staff and reviewed DOT&PF policies, guidance, and manuals pertaining to NEPA responsibilities. All reviews focused on objectives related to the six NEPA Assignment Program elements: Program Management, Documentation and Records Management, Quality Assurance/Quality Control (QA/QC), Training, Performance Measures, and Legal Sufficiency.

Project File Review: To consider DOT&PF staff adherence to program procedures and Federal requirements, the audit team selected a sample of individual project files for which the environmental review had been completed. The audit team evaluated DOT&PFs compliance with assumed responsibilities and adherence to their own processes and procedures for project-level environmental decision-making. The audit team did not evaluate DOT&PF's project-specific decisions. The 54 sampled files included programmatic CEs (actions approved in the regional offices as noted in DOT&PF's November 2017 NEPA Assignment Categorical Exclusion guidance), CEs, Environmental Assessments (approved in the Statewide Environmental Office (SEO)), and re-evaluations (approved by the same office as the original environmental document).

PAIR Review: The audit team reviewed DOT&PF's responses to the PAIR, which consisted of 32 questions about specific elements in the MOU that DOT&PF must implement. The audit team used these responses to develop specific follow-up questions for interviews with DOT&PF staff.

DOT&PF Self-Assessment Review: The audit team reviewed DOT&PF's January 2020 Self-Assessment Report and used it to develop specific follow-up questions for interviews with DOT&PF staff. The NEPA Assignment Program MOU Section 8.2.5 requires the DOT&PF to conduct annual self-assessments of its QA/QC procedures and performance.

Interviews: The audit team conducted 21 interviews with DOT&PF staff. Interviewees included staff from each of DOT&PF's three regional offices and its SEO. The audit team invited DOT&PF staff and middle management to participate in interviews to ensure they represented a diverse range of staff expertise, experience, and program responsibility.

In addition, the audit team conducted two phone interviews of attorneys with the Alaska Department of Law and five phone interviews with staff at the U.S. Army Corps of Engineers (USACE) and the National Marine Fisheries Service (NMFS).

Policy/Guidance/Manual Review: Throughout the document reviews and interviews, the audit team verified information on DOT&PF's NEPA Assignment Program including DOT&PF policies, guidance, manuals, and reports. This included the Environmental Program Manual (EPM), the NEPA Assignment QA/QC Plan, the NEPA Assignment Program Training Plan, and the NEPA Assignment Self-Assessment Report.

Overall Audit Opinion

This report identifies two observations and three successful practices. The audit team finds DOT&PF is substantially in compliance with the provisions of the MOU, has carried out the environmental responsibilities it assumed through the NEPA Assignment Program, and has taken steps to address observations identified in the second audit.

Non-Compliance Observations

The audit team did not make any non-compliance observations in the third audit.

Observations and Successful Practices

This section summarizes the audit team's observations of DOT&PF's NEPA Assignment Program implementation, and DOT&PF's successful practices. ''Observations'' are items the audit team would like to draw DOT&PF's attention to, which may benefit from revisions to improve processes, procedures, or outcomes. The DOT&PF may have already taken steps to address or improve upon the audit team's observations, but at the time of the audit they appeared to be areas where DOT&PF could make improvements. ''Successful practices'' are positive results that FHWA would like to commend DOT&PF on developing. These may include ideas or concepts that DOT&PF has planned but not yet implemented. Successful practices and observations are described under the six MOU topic areas: Program Management, Documentation and Records Management, QA/QC, Training, Performance Measures, and Legal Sufficiency.

This audit report provides an opportunity for DOT&PF to take further actions to improve their program. The FHWA will consider the status of areas identified for potential improvement in this audit's observations as part of the scope of the fourth audit. The fourth audit report will include a summary discussion that describes progress since this audit.

Program Management

Program Management includes the overall administration of the NEPA Assignment Program. The audit team noted the following successful practices and observations related to program management.

Successful Practice #1: Consultation With Resource Agencies

The review team interviewed five staff from USACE and three staff from NMFS. Under Section 3.2.1 of the MOU, the State assumed DOT Secretary's responsibilities for highway projects under NEPA for environmental review, reevaluation, consultation, or other actions required under the Endangered Species Act, the Clean Water Act, and other environmental laws. The audit teams' assessment of DOT&PF's compliance with consultation and permitting requirements under this section of the MOU resulted in the following five conclusions:

1. DOT&PF is submitting complete and accurate information to both the USACE and NMFS for consultation and permitting requirements.

2. DOT&PF is very responsive when agencies request additional information or revisions.

3. DOT&PF submits comprehensive and timely monitoring reports when they are required for projects.

4. DOT&PF has improved their oversight of construction contractors' adherence to USACE permit conditions. The DOT&PF has self-reported permit

violations and worked with USACE to remedy the situation.

5. DOT&PF has a good working relationship with USACE and NMFS. Some of the DOT&PF regions have set up regular meetings with the agencies to foster relationships and enhance communication. Resource agency interviews revealed that they think those meetings are helpful and would like them to continue.

The USACE interviews identified an opportunity to increase the efficiency of interagency coordination. The DOT&PF should more clearly identify in the permitting package whether a project is a Federal undertaking or not, and identify what coordination it has completed.

Observation #1: Self-Assessment Procedures

Section 8.2.5 of the MOU (Monitoring and Oversight), requires DOT&PF to perform annual self-assessments of its QA/QC process and performance to determine if the process is working as intended. Section 10.1.3 of the MOU (Performance Measurement) requires DOT&PF to collect and maintain data related to the attainment of performance measures, monitor progress towards meeting performance measures, and include its progress in a self-assessment. The DOT&PF's 2018 NEPA Assignment Program Self-Assessment Procedures require that SEO develop the preliminary and final self-assessment report through coordination with, and input from, the Regional Environmental Managers. The audit team found that DOT&PF did not develop the January 2020 Self-Assessment Report in accordance with their procedures, and did not distribute the final report to the regions. The audit team based this finding on interviews.

Documentation and Records Management

Documentation and Records Management includes maintaining project files and other recordkeeping (whether hardcopy or electronic) pertaining to DOT&PF's discharge of the responsibilities it has assumed under the 23 U.S.C. 327 Program. From November 1, 2018, through October 31, 2019, DOT&PF made 287 project decisions. Through employing both random and judgmental sampling procedures, the audit team identified 54 project decisions to review, and did not identify any systemic issues warranting an observation.

Quality Assurance/Quality Control

Under Section 8.2.4 of the MOU, DOT&PF agreed to carry out regular QA/QC activities in accordance with the MOU and DOT&PF procedures established to implement the NEPA Assignment Program. Based on the information evaluated by the audit team, DOT&PF is conducting regular QA/QC activities in accordance with the MOU, though opportunities exist to utilize trend data to continue improving the program.

Training

Under Sections 12.1 and 12.2 of the MOU, DOT&PF committed to implementing training necessary to carry out the environmental responsibilities assumed under the NEPA Assignment Program. The DOT&PF also committed to assessing its need for training, developing a training plan, and updating the training plan on an annual basis.

Successful Practice #2: Central Region Organizational Cross-Training Initiative

The Central Region has recently kicked off an organizational cross-training initiative, called ''Share-The-Knowledge,'' that provides opportunities for environmental analysts to get exposure to informal training in other functional areas, such as transportation planning, realty, safety, highway design, operations, and construction. Cross-training provides a general awareness of how and to what extent NEPA reviews can relate to project planning and inform Federal-aid highway project development.

Successful Practice #3: Taking Advantage of Training Opportunities

Based on interviews, the audit team learned the South Coast Region invited Federal resource agency representatives to monthly meetings to encourage knowledge sharing and partnering. During a time when training budgets are limited, FHWA encourages DOT&PF to continue to take advantage of training opportunities that may be made available by Federal partners. One example was when DOT&PF staff participated in the recent NMFS acoustic training in Anchorage.

Performance Measures

The DOT&PF continues to collect, maintain, and develop data towards monitoring its performance as required by Section 10.1.3 of the MOU. The audit team noted the following observation related to Performance Measures.

Observation #2: Assessing Resource Agency Communication

Section 10.2.1 C. of the MOU requires DOT&PF to ''Assess change in communication among DOT&PF, Federal and State agencies, and the public resulting from assumption of responsibilities under this MOU.'' The MOU allows DOT&PF to determine the method it will use to assess this change. The DOT&PF selected to use an annual resource agency poll. The DOT&PF identified this measure in its *DOT&PF NEPA Assignment Program Performance Measures* document located on its website. In addition, DOT&PF reported in this audit, and Audits 1 and 2, that an annual resource poll would be the method for collecting data towards monitoring this measure. The DOT&PF has not used a resource agency poll to date. Through the audit team's review of DOT&PF's Self-Assessment, PAIR, and audit interviews with DOT&PF, the audit team found that a poll was not a useful tool to assess changes in communication. The FHWA recommends that DOT&PF consider changing the method for reporting this measure.

Legal Sufficiency

Since 2017, the same attorney from the Department of Law (DOL), Transportation Section, has been assigned to the NEPA Assignment Program. The assigned attorney has significant experience with Federal-aid highway projects and the Federal environmental process. The attorney works directly with DOT&PF staff on project environmental documents. Based on the interviews, the review process exceeded the standard set forth in the Environmental Procedures Manual, with the attorney being involved early in project development, normally reviewing a NEPA document before receiving a formal request for a legal sufficiency review. During the audit period, the attorney reviewed one Final Section 4(f) Evaluation and issued a finding of legal sufficiency in August 2019. The attorney did not review an environmental impact statement during the audit period.

The DOL management stated during the interviews that while one attorney is currently assigned to the program, should workload increase significantly another attorney would be assigned to NEPA work, perhaps through the utilization of outside counsel per 23 U.S.C. 327(a)(2)(G).

Based on these observations, the audit team finds that the DOT&PF meets the legal sufficiency determination and staffing requirements set forth in the DOT&PF Environmental Procedures Manual.

Status of Observations From Audit #2 Report (April 2019)

This section describes the actions DOT&PF has taken (or is taking) in response to observations made during the second audit.

Observation #1: Applicability of Existing Interagency Agreements

Section 5.1.3 of the MOU required the DOT&PF to work with FHWA and the resource agencies to modify existing interagency agreements within 6 months of the effective date of the MOU. During Audit 2, the audit team determined that none of DOT&PF's existing agreements applied to the current NEPA Assignment Program under 23 U.S.C. 327. According to the January 2020 Self-Assessment Report, ''DOT&PF is not currently pursuing agency agreements per Section 5.1.4 of the MOU regarding appropriate processes and procedures.''

Observation #2: DOT&PF Delegation of Authority for NEPA Approvals

Section 3.3.1 of the MOU requires DOT&PF to make NEPA approvals (CE determinations, findings of no significant impact, or records of decision). Audit 2 revealed inconsistencies regarding the delegation of NEPA approvals within DOT&PF. The DOT&PF's January 2020 Self-Assessment states that DOT&PF will incorporate a protocol that standardizes the delegation authority for NEPA approval in the regions in the February 2020 update of its EPM. The DOT&PF has not made any changes to the EPM since February 2018 per the DOT&PF's response to Audit 3's Pre-Audit Information Request. In interviews conducted as part of Audit 3, DOT&PF relayed plans to incorporate this protocol into the EPM in May 2020. Currently, each region has its own delegation process. Generally, DOT&PF delegates NEPA approvals to the senior staff and communicates that delegation via email to affected parties. Most staff interviewed understand their region's delegation process and new staff are becoming oriented with the process.

Observation #3: Staff Capacity

Sections 4.2.1 and 4.2.2 of the MOU outline the requirements for the State's commitment of resources and adequate organizational staff capacity. Moderate to high staff turnover has been a recurring issue since the MOU went into effect (Audit #1 report Observation #3 and Audit #2 report Observation #3). According to the January 2020 Self-Assessment Report, ''DOT&PF's staffing levels were a concern during this audit period and senior staff expended considerable effort to hire new qualified staff and to retain current staff. As a result of this effort, the regional offices are now fully or near fully staffed.'' DOT&PF is aware of the issue and continues to track staffing impacts on the NEPA Assignment Program through the QA/QC process.

Observation #4: Documentation of Environmental Commitments

Section 5.1.1 of the MOU requires the State to follow Federal laws, regulations, policies, and procedures to implement the responsibilities assumed. Audit 2 revealed inconsistencies regarding how DOT&PF was documenting environmental commitments and making sure that DOT&PF carries the environmental commitments through the project development process and into construction. The DOT&PF developed written guidance on the documentation of environmental commitments. According to the January 2020 Self-Assessment Report, the guidance was implemented on May 5, 2019. Based on the interviews conducted as part of Audit 3, DOT&PF staff understood who certified that the environmental commitments were included in the plan, specifications, and estimates, as well as their role in the certification process.

Observation #5: Inconsistency in Project Termini and Statewide Transportation Improvement Program (STIP)

Section 3.3.1 of the MOU requires DOT&PF, at the time of NEPA approval (CE determination, finding of no significant impact, or record of decision), to ensure that the project's design concept, scope, and funding is consistent with current planning documents. During Audit 2, the audit team found one project file with an inconsistency between project termini shown in a project plan and that described in the STIP, and similar inconsistencies in the DOT&PF's Audit 2 Self-assessment. Project scope inconsistencies were not found by the file review team during Audit 3. The DOT&PF's Audit 3 Self-assessment identified one instance of a project description discrepancy that did not affect the scope of the project. Regional QC efforts appear to have improved this issue, although DOT&PF noted in their self-assessment that using the STIP project description as the project scope in environmental documents is not possible for all projects.

Observation #6: Training Plan Update

Section 12.2 of the MOU commits DOT&PF and FHWA to update the DOT&PF training plan annually in consultation with other Federal Agencies as appropriate. The DOT&PF did not update its Training Plan prior to or during the Audit 2 process. In their response to the Audit 3 PAIR, DOT&PF stated ''the training plan was updated on October 29, 2019, with minor revisions to Section 5. A list of proposed training has been added to this section and the RD&T2 [Research, Development, and Technology Transfer], FHWA, and Prior Training Requests subsections have been removed.'' Based on the information gathered through the PAIR and interviews, the audit team is satisfied that the DOT&PF addressed the training observation from the second audit. Moving forward, DOT&PF committed to coordinating with the FHWA Alaska Division Office and other Federal Agencies, as appropriate, for the future annual updates of the training plan.

[FR Doc. 2022–03171 Filed 2–14–22; 8:45 am]

BILLING CODE 4910–22–P

DEPARTMENT OF THE TREASURY

Office of Foreign Assets Control

Notice of OFAC Sanctions Actions

AGENCY: Office of Foreign Assets Control, Treasury.

ACTION: Notice.

SUMMARY: The U.S. Department of the Treasury's Office of Foreign Assets Control (OFAC) is publishing the names of one or more persons that have been placed on OFAC's Specially Designated Nationals and Blocked Persons List (SDN List) based on OFAC's determination that one or more applicable legal criteria were satisfied. All property and interests in property subject to U.S. jurisdiction of these persons are blocked, and U.S. persons are generally prohibited from engaging in transactions with them.

DATES: See **SUPPLEMENTARY INFORMATION** section for effective date(s).

FOR FURTHER INFORMATION CONTACT: OFAC: Andrea Gacki, Director, tel.: 202–622–2490; Associate Director for Global Targeting, tel.: 202–622–2420; Assistant Director for Licensing, tel.: 202–622–2480; Assistant Director for Regulatory Affairs, tel.: 202–622–4855; or the Assistant Director for Sanctions Compliance & Evaluation, tel.: 202–622–2490.

SUPPLEMENTARY INFORMATION:

Electronic Availability

The Specially Designated Nationals and Blocked Persons List and additional information concerning OFAC sanctions

programs are available on OFAC's website (*https://www.treasury.gov/ofac*).

Notice of OFAC Actions

On February 10, 2022, OFAC determined that the property and interests in property subject to U.S. jurisdiction of the following persons are blocked under the relevant sanctions authority listed below.

Individuals

1. VALDEZ RUIZ, Miguel Angel (a.k.a. VALDEZ CAJAMARCA, Miguel Eduardo), Priv. Bosques de los Olivos 349, Lomas de San Isidro, Culiacan, Sinaloa, Mexico; DOB 19 Oct 1988; POB Sinaloa, Mexico; nationality Mexico; Gender Male; C.U.R.P. VARM881019HSLLZG05 (Mexico) (individual) [ILLICIT–DRUGS–E.O.]. Sanctioned pursuant to section 1(a)(i) of Executive Order 14059 of December 15, 2021, ''Imposing Sanctions on Foreign Persons Involved in the Global Illicit Drug Trade,'' (the ''Order''), for having engaged in, or attempted to engage in, activities or transactions that have materially contributed to, or pose a significant risk of materially contributing to, the international proliferation of illicit drugs or their means of production.

2. SANCHEZ FARFAN, Wilder Emilio (a.k.a. ''GATO''), Estancias Del Rio No. 16, MZ Sur, Tarqui, Guayaquil, Guayas, Ecuador; DOB 27 Sep 1980; POB Chacras, Arenillas, El Oro, Ecuador; nationality Ecuador; citizen Ecuador; Gender Male; Cedula No. 2100326350 (Ecuador) (individual) [ILLICIT–DRUGS–E.O.].

Sanctioned pursuant to section 1(a)(i) of the Order for having engaged in, or attempted to engage in, activities or transactions that have materially contributed to, or pose a significant risk of materially contributing to, the international proliferation of illicit drugs or their means of production.

Dated: February 10, 2022.

Andrea M. Gacki,

Director, Office of Foreign Assets Control, U.S. Department of the Treasury.

[FR Doc. 2022–03185 Filed 2–14–22; 8:45 am]

BILLING CODE 4810–AL–P

DEPARTMENT OF VETERANS AFFAIRS

Veterans' Family, Caregiver and Survivor Advisory Committee, Notice of Meeting

The Department of Veterans Affairs (VA) gives notice under the Federal Advisory Committee Act (FACA), 5 U.S.C. App. 2, that the Veterans' Family, Caregiver, and Survivor Advisory Committee will meet virtually on March 29, 2022. The meeting session will begin and end as follows:

Date:	Time:
March 29, 2022	12:00 p.m. to 3:00 p.m. EST.

The meeting is open to the public and will be conducted using Microsoft Teams. Please email *VEOFACA@va.gov* for an invitation link prior to March 28, 2022 or dial-in by phone (for audio only) 1–872–701–0185, United States, Chicago (Toll), Conference ID: 159879334#.

The purpose of the Committee is to advise the Secretary of Veterans Affairs on matters related to: The need of Veterans' families, caregivers and survivors across all generations, relationships and Veterans status; the use of VA care, benefits and memorial services by Veterans' families, caregivers and survivors, and opportunities for improvements to the experience using such services; VA policies, regulations and administrative requirements related to the transition of Servicemembers from the Department of Defense (DoD) to enrollment in VA that impact Veterans' families, caregivers and survivors; and factors that influence access to, quality of and accountability for services, benefits and memorial services for Veterans' families, caregivers and survivors.

On March 29, 2022, the agenda will include opening remarks from the Committee Chair and the Chief Veterans Experience Officer. There will be presentations on the responses to the recommendations submitted by the Committee and briefings to include updates from the Caregiver Support Program.

Individuals wishing to share information with the Committee should contact the VEO Federal Advisory Committee Team at *VEOFACA@va.gov* to submit a 1–2 page summary of their comments for inclusion in the official meeting record before March 28, 2022 at 5:00 p.m. (EST). Due to the time limitations of virtual meetings, public comments will be submitted prior to the meeting and distributed to the Committee before the designated meeting time on March 29, 2022.

Any member of the public seeking additional information should contact Betty Moseley Brown (Designated Federal Official) *Betty.MoseleyBrown@va.gov* or 210–392–2505.

Dated: February 10, 2022.

Jelessa M. Burney,

Federal Advisory Committee Management Officer.

[FR Doc. 2022–03232 Filed 2–14–22; 8:45 am]

BILLING CODE P

DEPARTMENT OF VETERANS AFFAIRS

Advisory Committee on Homeless Veterans, Notice of Meeting

The Department of Veterans Affairs (VA) gives notice under the Federal Advisory Committee Act, 5 U.S.C., App. 2., that virtual meetings of the Advisory Committee on Homeless Veterans will be held on April 5–April 6, 2022. The meeting sessions will begin and end at 12:00 p.m. to 4:00 p.m. Eastern Standard Time (EST). The meeting sessions will be open to the public.

The purpose of the Committee is to provide the Secretary of Veterans Affairs with an ongoing assessment of the effectiveness of the policies, organizational structure and services of VA in assisting Veterans at risk of and experiencing homelessness. The Committee shall assemble, and review information related to the needs of homeless Veterans and provide advice on the most appropriate means of assisting this Veteran population. The Committee will make recommendations to the Secretary regarding such activities.

The agenda for all sessions will include briefings from VA and other Federal agency officials regarding services for homelessness among Veterans. The Committee will also discuss its annual report and recommendations to the Secretary of Veterans Affairs.

No time will be allocated at the meetings for receiving oral presentations from the public. Interested parties should provide written comments on issues affecting homeless Veterans for review by the Committee to Leisa Davis, Designated Federal Officer, Veterans Health Administration Homeless Programs Office (11HPO), U.S. Department of Veterans Affairs, 811 Vermont Avenue NW (11HPO), Washington, DC 20420, or via email at *Leisa.Davis@va.gov* and *achv@va.gov.*

Members of the public who wish to attend should contact Leisa Davis of the Veterans Health Administration, Homeless Programs Office, at *Leisa.Davis@va.gov* and *achv@va.gov* or 202–632–8588 no later than March 25, 2022, providing their name, professional affiliation, email address, and phone number. Attendees who require

reasonable accommodations should also state so in their requests. Below is a meeting link and call-in number:

Join By Zoom Meeting: *https://us06web.zoom.us/j/89820128103.*

Meeting ID: 898 2012 8103

One Tap Mobile

+13017158592, 89820128103# US (Washington DC)

+13126266799, 89820128103# US (Chicago)

Dial By Your Location

+1 301 715 8592 US (Washington DC)

+1 312 626 6799 US (Chicago)

+1 646 558 8656 US (New York)

+1 253 215 8782 US (Tacoma)

+1 346 248 7799 US (Houston)

+1 720 707 2699 US (Denver)

Dated: February 10, 2022.

Jelessa M. Burney,

Federal Advisory Committee Management Officer.

[FR Doc. 2022–03231 Filed 2–14–22; 8:45 am]

BILLING CODE 8320–01–P

DEPARTMENT OF VETERANS AFFAIRS

[OMB Control No. 2900–NEW]

Agency Information Collection Activity: Application for Veterans Affairs Life Insurance (VALI)

AGENCY: Veterans Benefits Administration, Department of Veterans Affairs.

ACTION: Notice.

SUMMARY: Veterans Benefits Administration, Department of Veterans Affairs (VA), is announcing an opportunity for public comment on the proposed collection of certain information by the agency. Under the Paperwork Reduction Act (PRA) of 1995, Federal agencies are required to publish notice in the **Federal Register** concerning each proposed collection of information, including each proposed extension of a currently approved collection, and allow 60 days for public comment in response to the notice.

DATES: Written comments and recommendations on the proposed collection of information should be received on or before April 18, 2022.

ADDRESSES: Submit written comments on the collection of information through Federal Docket Management System (FDMS) at *www.Regulations.gov* or to Nancy J. Kessinger, Veterans Benefits Administration (20M33), Department of Veterans Affairs, 810 Vermont Avenue NW, Washington, DC 20420 or email to *nancy.kessinger@va.gov* Please refer to ''OMB Control No. 2900—NEW'' in any correspondence. During the comment period, comments may be viewed online through FDMS.

FOR FURTHER INFORMATION CONTACT: Maribel Aponte, Office of Enterprise and Integration, Data Governance Analytics (008), 1717 H Street NW, Washington, DC 20006, (202) 266–4688 or email *maribel.aponte@va.gov.* Please refer to ''OMB Control No. 2900—NEW'' in any correspondence.

SUPPLEMENTARY INFORMATION: Under the PRA of 1995, Federal agencies must obtain approval from the Office of Management and Budget (OMB) for each collection of information they conduct or sponsor. This request for comment is being made pursuant to Section 3506(c)(2)(A) of the PRA.

With respect to the following collection of information, VBA invites comments on: (1) Whether the proposed collection of information is necessary for the proper performance of VBA's functions, including whether the information will have practical utility; (2) the accuracy of VBA's estimate of the burden of the proposed collection of information; (3) ways to enhance the quality, utility, and clarity of the information to be collected; and (4) ways to minimize the burden of the collection of information on respondents, including through the use of automated collection techniques or the use of other forms of information technology.

Authority: Public Law 104–13; 44 U.S.C. 3501–3521.

Title: Application for Veterans Affairs Life Insurance (VALI) VA Form 29–10277.

OMB Control Number: 2900—NEW.

Type of Review: Revision of a currently approved collection.

Abstract: This form is used by authorized agents (POA, Guardian, or VA Fiduciary) to apply on behalf of incompetent Veterans for Veterans Affairs Life Insurance (VALI) and to designate a beneficiary. The information is required by law, 38 U.S.C., Section 1922.

Affected Public: Individuals and households.

Estimated Annual Burden: 8,333 hours.

Estimated Average Burden per Respondent: 20 minutes.

Frequency of Response: On occasion.

Estimated Number of Respondents: 25,000.

By direction of the Secretary.

Dorothy Glasgow,

VA PRA Clearance Officer, (Alt) Office of Enterprise and Integration/Data Governance Analytics, Department of Veterans Affairs.

[FR Doc. 2022–03044 Filed 2–14–22; 8:45 am]

BILLING CODE 8320–01–P

DEPARTMENT OF VETERANS AFFAIRS

Geriatric and Gerontology Advisory Committee; Notice of Meeting

The Department of Veterans Affairs (VA) gives notice under the Federal Advisory Committee Act, 5 U.S.C. App.2, that a meeting of the Geriatric and Gerontology Advisory Committee will be held virtually on Tuesday, April 12, 2022 from Noon to 4 p.m. and Wednesday, April 13, 2022, from Noon to 4 p.m. (Eastern Daylight Time) on both days. This meeting will be conducted virtually via WebEx and is open to the public.

The purpose of the Committee is to provide advice to the Secretary of VA and the Under Secretary for Health on all matters pertaining to geriatrics and gerontology. The Committee assesses the capability of VA health care facilities and programs to meet the medical, psychological, and social needs of older Veterans, and evaluates VA programs designated as Geriatric Research, Education, and Clinical Centers.

Although no time will be allocated for receiving oral presentations from the public, members of the public may submit written statements for review by the Committee to: Marianne Shaughnessy, CRNP, Ph.D., Designated Federal Officer, Veterans Health Administration by email at *Marianne.Shaughnessy@va.gov.* Comments will be accepted until close of business on April 1, 2022. In the communication, the writers must identify themselves and state the organization, association of person(s) they represent.

Any member of the public wishing to attend virtually or seeking additional information should email *Marianne.Shaughnessy@va.gov* or call 202–407–6798, no later than close of business on April 1, 2022, to provide their name, professional affiliation, email address and phone number. For any members of the public that wish to attend, they may use the WebEx link for April 12, 2022: *https://veteransaffairs.webex.com/veteransaffairs/j.php?MTID=medd884c2056a1583e05f3db386b12f6b,* meeting number (access code): 2764 988 2211, meeting password: WvMKUcJ*583 or April 13, 2022: *https://veteransaffairs.webex.com/veteransaffairs/j.php?MTID=m13f8f084972ac6c30533541921a0c03a,* meeting number (access code): 2761 457 0947, meeting password: DFkmpQZ*254, or to join by phone either day: 1–404–397–1596.

Dated: February 10, 2022.

LaTonya L. Small,

Federal Advisory Committee Management Officer.

[FR Doc. 2022–03216 Filed 2–14–22; 8:45 am]

BILLING CODE P

FEDERAL REGISTER

Vol. 87 Tuesday,

No. 31 February 15, 2022

Part II

Consumer Product Safety Commission

16 CFR Parts 1112, 1130, and 1241

Safety Standard for Crib Mattresses; Final Rule

CONSUMER PRODUCT SAFETY COMMISSION

16 CFR Parts 1112, 1130, and 1241

[CPSC Docket No. 2020–0023]

Safety Standard for Crib Mattresses

AGENCY: Consumer Product Safety Commission.

ACTION: Final rule.

SUMMARY: Pursuant to the Consumer Product Safety Improvement Act of 2008 (CPSIA), the U.S. Consumer Product Safety Commission (CPSC) is issuing this final rule establishing a safety standard for crib mattresses, which includes full-size and non-full-size crib mattresses, as well as after-market mattresses for play yards and non-full-size cribs. CPSC is also finalizing an amendment to its regulations regarding third party conformity assessment bodies, to include the safety standard for crib mattresses in the list of notices of requirements (NORs) along with an amendment to the consumer registration rule, to identify crib mattresses as a durable infant or toddler product subject to consumer registration requirements.

DATES: This rule will become effective August 15, 2022. The incorporation by reference of the publication listed in this rule is approved by the Director of the Federal Register as of August 15, 2022.

FOR FURTHER INFORMATION CONTACT: Justin Jirgl, Compliance Officer, U.S. Consumer Product Safety Commission, 4330 East-West Highway, Bethesda, MD 20814; telephone: (301) 504–7814; email: *jjirgl@cpsc.gov.*

SUPPLEMENTARY INFORMATION:

I. Background and Statutory Authority

A. Background

On June 16, 2015, the president of Keeping Babies Safe (KBS) and the mother of a child who died in an incident involving an after-market play yard mattress, petitioned the CPSC, requesting a ban on supplemental mattresses for play yards with non-rigid sides (petition CP 15–2: Petition Requesting Rulemaking on Supplemental Mattresses for Play Yards with Non-Rigid Sides). The petitioner alleged that ''thicker mattresses create a suffocation hazard because they create a gap between the mattress pad sides and the side of the portable crib where a baby can suffocate when the baby's head falls in such gap while lying in the prone position.'' Petitioner asserted that ''no feasible consumer product safety standard would adequately protect babies from the unreasonable risk of injury and death associated with the product.''

CPSC staff prepared a briefing package for the petition, recommending that the Commission defer action on the petition, so that staff could work on voluntary standards for crib mattresses and play yards to address the hazards identified in the petition. Staff noted that any work on the play yard voluntary standard could become a mandatory standard through the Public Law 112–28 update process, because the Commission has an existing mandatory standard for play yards (16 CFR part 1221); however, any changes to the crib mattress voluntary standard would remain a voluntary standard, because the Commission does not have a mandatory rule for crib mattresses.

On May 25, 2017, in response to the petition request and staff's recommendation to defer the petition, the Commission voted [1] (3–2) to ''take other action'' and granted the petition, directing staff to: (1) Initiate a rulemaking under section 104 of the CPSIA for a mandatory consumer product safety standard that will address the risk of injury associated with the use of crib mattresses; (2) include ''supplemental and aftermarket mattresses used in play yards and portable cribs'' [2] within the scope of the crib mattress rulemaking; and (3) update the product registration card rule (16 CFR part 1130) to include ''crib mattresses'' in the list of durable infant or toddler products subject to the rule.

On October 26, 2020, the Commission issued a notice of proposed rulemaking (NPR) under section 104 of the CPSIA, proposing a mandatory consumer product safety standard for crib mattresses, based on ASTM F2933–19, *Standard Consumer Safety Specification for Crib Mattresses* (ASTM F2933–19), with five modifications, to make the standard more stringent, to further reduce the risk of injury associated with crib mattresses.[3] 85 FR 67906. The Commission is finalizing the rule by incorporating by reference the most recent voluntary standard for crib mattresses, ASTM F2933–21, with modifications substantially as proposed in the NPR, to further reduce the risk of injury to children associated with crib mattresses.[4]

B. Statutory Authority

Section 104(b) of the CPSIA requires the Commission to: (1) Examine and assess the effectiveness of voluntary consumer product safety standards for durable infant or toddler products, in consultation with representatives of consumer groups, juvenile product manufacturers, and independent child product engineers and experts; and (2) promulgate consumer product safety standards for durable infant or toddler products. 15 U.S.C. 2056a(b). Standards issued under section 104 are to be ''substantially the same as'' the applicable voluntary standards, or more stringent than the voluntary standard, if the Commission determines that more stringent requirements would further reduce the risk of injury associated with the product. *Id.* at 2056a(b)(1)(B).

Regarding the consultation requirement in section 104(b)(1) of the CPSIA, CPSC staff regularly participates in the juvenile products subcommittee meetings of ASTM International (ASTM). ASTM subcommittees consist of members who represent producers, users, consumers, government, and academia.[5] The consultation process for the crib mattresses rulemaking commenced during the ASTM subcommittee meeting in May 2018, when CPSC staff presented initial recommendations for updating the crib mattress voluntary standard to address the incident data. Since then, staff has actively participated with the ASTM F15.66 subcommittee for Crib Mattresses in revising ASTM F2933, *Standard Consumer Safety*

[1] *https://www.cpsc.gov/s3fs-public/RCA-Petition_CP_15-2_Requesting_Ban_on_Supplemental_Mattresses_for_Play_Yards_with_Non-Rigid_Sides_052517.pdf.*

[2] Although the petitioner used the term ''supplemental mattress,'' ASTM F2933–21 uses and defines the term ''after-market'' mattress. Both terms refer to a mattress that is bought separately from a play yard or non-full-size crib. Like the NPR, the final rule will use the defined term ''after-market'' mattress. Section 3.1.1 of ASTM F2933–21 defines an ''after-market mattress for a play yard or non-full-size crib'' as ''a mattress sold or distributed for a play yard or non-full-sized crib.'' Section 3.1.1.1 of ASTM F2933–21 states that the definition does not include a replacement mattress sold by an original equipment manufacturer as a replacement, if it is equivalent to the mattress originally provided with the product.

[3] Previously, on November 21, 2016, the Commission issued an NPR for a Safety Standard for Portable Generators, proposing to codify the standard at 16 CFR part 1241. 81 FR 83556. The Commission is reusing part 1241 for this final rule for a Safety Standard for Crib Mattresses, to keep all regulations for durable infant or toddler products in one section of the Code of Federal Regulations (CFR). The Commission intends to renumber the CFR citation for portable generators when that rulemaking is finalized.

[4] On January 26, 2022, the Commission voted 4–0 to issue this final rule. Commissioner Trumka issued a statement in connection with his vote.

[5] ASTM International website: *www.astm.org,* About ASTM International.

Specification for Crib Mattresses, to address the associated hazards.[6]

Section 104(d) of the CPSIA requires manufacturers of durable infant or toddler products to establish a product registration program and comply with CPSC's implementing rule, 16 CFR part 1130. Any product defined as a ''durable infant or toddler product'' in part 1130 must comply with the product registration requirements, as well as testing and certification requirements for children's products, as codified in 16 CFR parts 1107 and 1109. Section 104(f)(1) of the CPSIA defines a ''durable infant or toddler product'' as a ''durable product intended for use, or that may be reasonably expected to be used, by children under the age of 5 years.'' 15 U.S.C. 2056a(f)(1). Section 104(f)(2) of the CPSIA includes a list of categories of products that are durable infant or toddler products, including products used for infant sleep, such as cribs (full-size and non-full-size), toddler beds, bassinets and cradles, and play yards. *Id.* 2056a(f)(2).

Although crib mattresses are used with products for infant sleep, crib mattresses are not included in the statutory list of durable infant or toddler products. This final rule amends part 1130 to include ''crib mattresses'' within the scope of ASTM F2933 as durable infant or toddler products, as proposed in the NPR, because: (1) They are intended for use, and may be reasonably expected to be used, by children under the age of 5 years; (2) they are products similar to the products listed in section 104(f)(2) of the CPSIA; (3) they are used in conjunction with other durable infant or toddler products used for infant sleep, such as cribs and play yards; and (4) CPSC cannot fully address the risk of injury associated with products for infant sleep without addressing the hazards associated with the use of crib mattresses.

Finally, products subject to a consumer product safety rule under the CPSA must be certified as complying with all applicable CPSC-enforced requirements, based on testing conducted by a CPSC-accepted third party conformity assessment body. 15 U.S.C. 2063(a). The Commission must publish an NOR for the accreditation of third party conformity assessment bodies to assess conformity with a children's product safety rule to which a children's product is subject. *Id.* 2063(a)(3). Accordingly, we now finalize an amendment to part 1112, as proposed in the NPR, to add the new *Safety Standard for Crib Mattresses,* 16 CFR part 1241, to the list of NORs for children's product safety rules. The amendment allows test laboratories applying for CPSC acceptance to seek accreditation to test crib mattresses within the scope of the rule.

C. NPR[7]

On October 26, 2020, the Commission issued an NPR under section 104 of the CPSIA, proposing a mandatory consumer product safety standard for crib mattresses, based on ASTM F2933–19, *Standard Consumer Safety Specification for Crib Mattresses* (ASTM F2933–19), with five modifications, to make the standard more stringent, to further reduce the risk of injury associated with crib mattresses. 85 FR 67906. The scope of the NPR included ''crib mattresses'' within the scope of the voluntary standard for crib mattresses: Full-size crib mattresses, non-full-size mattresses, and after-market mattresses for play yards and non-full-size crib mattresses.

The five proposed modifications to the voluntary standard in the NPR addressed the following hazards: (1) Suffocation hazards associated with crib mattresses, due to overly soft mattresses, by adding a test for mattress firmness based on sections 6 and 8 of A*S/NZS 8811.1:2013—Methods of testing infant products—Method 1: Sleep Surfaces—Test* (AS/NZS 8811.1); (2) entrapment hazards associated with full-size crib mattresses, due to poor mattress fit from compression by sheets, by repeating the dimensional conformity test and measuring for corner gaps, after installing a shrunken (by washing twice) cotton sheet; (3) entrapment hazards associated with after-market, non-full-size crib mattresses, due to lack of dimensional requirements for rectangular-shaped products, by extending the dimensional requirements in ASTM F2933–19 section 5.7.2 to all non-full-size crib mattresses, regardless of mattress shape, and regardless of whether the mattress is sold with a non-full-size crib or as an after-market mattress; (4) laceration hazards associated with coils and springs breaking and poking through mattresses, by adding a cyclic impact test for mattresses that use coils and springs; and (5) the risks of SIDS and suffocation related to infant positioning, soft bedding, and gap entrapment, by improving the labeling and instructional literature requirements to communicate risks better to consumers, and to clarify requirements for manufacturers and test labs.

In the NPR, the Commission also proposed to amend the consumer registration rule, part 1130, to identify ''crib mattresses'' as a category of ''durable infant or toddler products'' subject to the consumer registration rule and testing and certification as a children's product. Finally, the Commission proposed to amend its regulation at 16 CFR part 1112 to add ''crib mattresses'' to the list of products that require third party testing as a basis for certification.

D. Update to ASTM F2933

Since the publication of the NPR, ASTM revised F2933–19 and published ASTM F2933–21. Like ASTM F2933–19, ASTM F2933–21 provides performance and labeling standards for ''crib mattresses'' intended for full-size cribs, non-full-size cribs, after-market mattresses for play yards, and after-market mattresses for non-full-size cribs. ASTM F2933–21 updates the requirements for after-market play yard and non-full-size crib mattresses as follows:

- Replaces requirement that ''aftermarket mattresses for soft-sided and non-rectangular, rigid-sided products shall have the same thickness, floor support structure, and attachment method as the mattress it is intended to replace'' with: (1) A requirement to test to specific sections in ASTM F406, *Standard Consumer Safety Specification for Non-Full-Size Baby Cribs/Play Yards,* including: *Stability; Cord/Strap Length; Mattress; Mattresses for Rigid-Sided Products; Crib Side Height; Height of Sides; Floor Strength;* and *Mattress Vertical Displacement,* when tested in the product it was designed for or intended to fit; (2) a requirement that the after-market mattress must be at least the same size as the original equipment mattress, so long as it lays flat on the support structure; and (3) a requirement that the after-market mattress floor support structure be at least as thick as the original equipment mattress floor support structure. These revisions allow play yard mattresses that may be thicker than what is provided by the original

[6] The docket for this rulemaking on *Regulations.gov* contains meeting logs for all CPSC staff-attended ASTM meetings related to the crib mattresses voluntary standard that occurred between issuance of the NPR and completing this final rule. CPSC's Division of the Secretariat maintains all other CPSC staff-attended meetings with outside stakeholders related to crib mattresses.

[7] The NPR was based on information provided in the September 30, 2020, Staff Briefing Package: Draft Notice of Proposed Rulemaking for Crib Mattresses Under the Danny Keysar Child Product Safety Notification Act (Staff's NPR Briefing Package), available at: *https://www.cpsc.gov/s3fs-public/Notice-of-Proposed-Rulemaking-Safety-Standard-for-Crib-Mattresses.pdf?mDLf.MBLutFluwt6QFjeZRhYdNLFRR.J.* This final rule also relies on information in Staff's NPR Briefing Package.

equipment manufacturer, but still limit such mattresses to a maximum of 1½ inches, as required by ASTM F406.

• Adds requirement specifying that after-market mattresses must have equivalent storage accommodations for instructions as the original equipment mattress.

We assess the revisions to the voluntary standard in section V.B of this preamble. Although the revisions in ASTM F2933–21 improve the safety of crib mattresses, by improving requirements for after-market mattresses for play yards and non-full-size cribs, ASTM's revised voluntary standard does not address all of the hazards identified in the NPR.[8]

E. Final Rule Overview

The Commission is finalizing the rule for crib mattresses by incorporating by reference the most recent version of the voluntary standard, ASTM F2933–21, with the five modifications described in section I.C of this preamble, to make the standard more stringent. However, based on comments on the NPR, and staff's continued work with the ASTM subcommittee on crib mattresses, the final rule contains the following clarifications from the NPR:

• Fitted Sheet Test Procedure for Full-Size Crib Mattresses—The final rule improves the test method proposed in the NPR for the fitted sheet test, by measuring corner gaps from a projected crib corner, to accommodate crib mattresses with larger dimensions while maintaining test veracity;

• Cyclic Impact Test Procedure—The final rule clarifies the test method, by requiring the use of two different mattresses for testing each side of a mattress sleep surface, to address the potential for testing to be destructive; and

• Safety Information—The final rule modifies the requirements for on-product and package labeling, to include important clarifications, and to communicate better to consumers the risks and preventative actions related to SIDS and suffocation.[9]

Section VI of this preamble contains additional discussion and assessment of the revisions to the voluntary standard, and section VIII of this preamble describes the final rule in more detail. This final rule is based on information provided in the September 29, 2021, Draft Final Rule for Crib Mattresses Under the Danny Keysar Child Product Safety Notification Act (Staff's Final Rule Briefing Package), available at: *https://www.cpsc.gov/s3fs-public/Final-Rule-Safety-Standard-for-Crib-Mattresses.pdf?VersionId=62bEXbfu7.mIoiiLfn_fbMWtFnEsgGON.*

II. Product Description

A. Scope of Products Within the Final Rule[10]

The scope of the final rule includes all crib mattresses[11] within the scope of ASTM F2933–21, which addresses three types of crib mattresses:

1. Full-size crib mattresses—Full-size crib mattresses within the scope of the final rule are typically sold separately from the crib in which they are intended to be used. Industry refers to full-size crib mattresses as ''standard'' crib mattresses. Full-size crib mattresses are also used for toddler beds, meaning that one full-size crib mattress may be used from birth through the toddler years. The fit of a crib mattress inside of a crib is key to preventing infants from becoming trapped between the side of the crib and the mattress, and suffocating. Accordingly, section 5.7 of ASTM F2933–21 requires that the dimensions of a full-size crib mattress shall measure at least 27¼ in. wide and 51⅝ in. long. The interior dimensions of full-size cribs are 28 ± ⅝ in. (710 ± 16 mm) wide and 52⅜ ± ⅝ in. (1,330 ± 16 mm) long. Full-size crib mattresses come in a variety of designs and are made of a broad array of materials. Full-size crib mattresses typically have a fabric or vinyl ticking, which covers innerspring coils or foam. Innerspring mattresses often have a layer of foam or batting between the springs and the ticking.

2. Non-full-size crib mattresses—Non-full-size cribs are cribs that differ in dimension or shape from ''standard'' full-size cribs. The final rule addresses all non-full-size crib mattresses, regardless of whether they are sold separately (after-market), or are sold with a non-full-size crib (referred to as ''original equipment manufactured mattresses'' or ''OEM'' mattresses), and regardless of whether they are rectangular or non-rectangular in shape.[12] Because non-full-size cribs do not come in a standard size, non-full-size crib mattresses do not have defined dimensions. Rather, each non-full-size crib is required to be sold with a properly fitting OEM mattress that meets the performance requirements in ASTM F406. Accordingly, for mattresses that are sold separately from the product and meant to replace OEM mattresses (after-market mattresses), ASTM F2933–21 sets a minimum effective crib-side height for non-full-size cribs and a maximum gap between the mattress edge and the crib side.[13] Section 5.7.2.1 of ASTM F2933–21 requires that the dimensions of a mattress supplied with a non-full-size baby crib shall be such that the mattress, when inserted in the center of the crib, in a non-compressed state, shall not leave a gap of more than ½ in. at any point between the perimeter of the mattress and the perimeter of the crib. Currently, section 5.9 of ASTM F2933–21 requires that after-market, non-rectangular, non-full-size crib mattresses meet the same performance requirements in ASTM F406 as the non-full-size crib mattresses they are intended to replace; and furthermore, section 5.9 requires after-market, non-rectangular, non-full-size crib mattresses to have labeling identifying the ''brand(s) and Model(s) numbers of products in which it is intended to be used,'' but only requires warning labels regarding dimensions on after-market, rectangular-shaped, non-full-size crib mattresses. The final rule extends the ASTM F406 performance requirements for mattresses sold with a non-full-size crib to all non-full-size crib mattresses, including OEMs, after-market, non-rectangular, and rectangular non-full-size crib mattresses.

3. After-market mattresses for play yards—After-market mattresses are products sold separately from a play yard,[2] and that are not sold by the OEM as a replacement mattress for their product. Pursuant to CPSC's mandatory rule for play yards, part 1221, which incorporates by reference ASTM F406–19, *Standard Consumer Safety Specification for Non-Full-Size Baby Cribs/Play Yards* (ASTM F406), all play yards must be sold with a mattress that is specifically designed to fit that product. Part 1221 regulates OEM play

[8] *See* Tab C of Staff's Final Rule Briefing Package.

[9] *See* Tab D, Appendix A of Staff's Final Rule Briefing Package.

[10] *See* Staff's Final Rule Briefing Package at Tab C for additional information on the scope of ASTM F2933–21.

[11] Section 3.1.4 of ASTM F2933–21 defines a ''crib'' as a ''bed that is designed to provide sleeping accommodations for an infant which have specific interior dimensions as determined by it being either a full size or non-full size crib.'' Section 3.1.5 of ASTM F2933–21 defines a ''mattress'' as ''ticking filled with a resilient material used alone or in combination with other products intended or promoted for sleeping on it.''

[12] We note that OEM non-full-size crib mattresses are also addressed in the Commission's mandatory rule for non-full-size cribs, 16 CFR part 1220, which incorporates by reference ASTM F406. The requirements in F406 for OEM non-full-size crib mattresses are the same requirements that appear in ASTM F2933 section 5.7.

[13] The most common rectangular, non-full-size crib mattress available for sale in the U.S. crib mattress market is the ''mini'' crib mattress. The mini crib mattress is smaller than the so-called ''standard'' or full-size crib mattress. The typical size of a ''mini'' crib mattress is 24″ wide and 38″ long. The depth of a ''mini'' crib mattress varies, but typically ranges from 1″ to 6″.

yard mattresses, but does not address after-market play yard mattresses. The final rule for crib mattresses addresses after-market mattresses for play yards, as set forth in ASTM F2933–21 section 5.9, by requiring that they meet the same specifications and performance requirements for OEM play yard mattresses in ASTM F406, as well as additional requirements for the after-market mattress fit, support structure, and instruction storage accommodations. Additionally, the final rule requires that after-market mattresses intended for use in the bassinet of a play yard with a bassinet attachment must also meet the specifications in ASTM F2194, *Consumer Safety Specifications for Bassinets and Cradles.*

B. Market Description [14]

Crib mattresses are designed to be used with products, such as full-size cribs, non-full-size cribs, bassinets and cradles, and play yards, intended to provide sleeping accommodations for an infant. According to estimates published by Statista-Grand View Research, the size of the U.S. market for standard and portable cribs was $86.8 million in 2018.[15] Currently, staff estimates that there are more than 300 crib mattress models available in the market.[16] According to data collected by staff, approximately 75 percent of crib mattresses available for sale in the United States are standard (full-size) crib mattresses. Crib mattresses range in price from $20 to $500, with the more expensive crib mattresses typically being full-size crib mattresses with a firm coil or high-end foam core. The average cost of a crib mattress available for sale in the United States is $150.[17] For consumers with limited income, smaller, less-expensive crib mattresses may appear to be a suitable alternative to higher-priced, full-size crib mattresses.

CPSC staff estimates that there are currently at least 32 domestic manufacturers or importers supplying crib mattresses to the U.S. market; 19 are domestic manufacturers, and 13 are domestic importers. In addition, six foreign companies distribute crib mattresses to the United States.[18] Among the 38 firms identified, roughly half are members of the Juvenile Products Manufacturers Association (JPMA), the major U.S. trade association that represents juvenile product manufacturers and importers. Many domestic suppliers of crib mattress are also members of ASTM. The typical manufacturer or importer of crib mattresses carries on average 10 mattress models. While some manufacturers produce a large variety of crib mattress models, others produce only a small selection of one or two models. The majority of domestic manufacturers of crib mattresses are considered small businesses, according to U.S. Small Business Administration (SBA) guidelines, and many of these small firms are JPMA or ASTM members.

This mandatory rule for crib mattresses will require not only third party testing for conformance to the new crib mattress rule, 16 CFR part 1241, but also a certificate of compliance. Crib mattresses already require third party testing and certification, because crib mattresses are already defined as ''children's products,'' and are currently subject to various other federal safety rules, such as mattress flammability, lead, and phthalate testing. Accordingly, a final rule for crib mattresses will incrementally increase the amount of crib mattress testing and certification requirements already in place.

C. Crib Mattress Use [14]

Based on information from the 2013 CPSC Durable Nursery Products Exposure Survey (DNPES) of U.S. households with children under 6 years old, an estimated 9.2 million cribs were in use in households with young children in 2013.[19] This represented about 73 percent of the estimated 12.6 million total cribs owned by households (*i.e.,* about 3.4 million cribs were owned, but not in use). Cribs, for the purposes of the DNPES, included both full-size and non-full-size cribs, which are designed to be used with a crib mattress. Therefore, staff estimates at least 9.2 million (full-size and non-full-size) crib mattresses were in use in 2013.[20] According to DNPES results, 84 percent of respondents indicated they used a fitted sheet on the crib mattresses, and 50 percent indicated they used a mattress pad. Six percent of respondents indicated that nothing was placed under the child in the crib, other than the intended mattress, indicating that the crib mattress was used bare.

According to the same survey, an estimated 5.8 million play yards were in use in households with young children. This represented about 54 percent of the estimated 10.9 million total play yards owned by households (*i.e.,* about 5.1 million play yards were owned, but not in use). Most play yards are designed to be used with a play yard mattress; therefore, staff estimates at least 5.8 million play yard mattresses were in use in 2013. Twenty-five percent of respondents indicated that nothing was placed under the child in the play yard, other than the intended mattress; 12 percent indicated they used a mattress pad, but no respondents indicated that they used a fitted sheet.

The DNPES did not cover child care facilities. One child care industry group's 2018 directory [21] lists more than 115,000 licensed child care centers and more than 137,000 home daycare providers, some of which may use crib or play yard mattresses. Furthermore, the survey did not cover hotels or other commercial lodging establishments. The U.S. Bureau of Labor Statistics (BLS) reports that there are about 70,000 lodging establishments in the accommodation industry sector, North American Industry Classification System (NAICS) code 721.[22] Based on the Commission's contacts with child care and lodging facilities, crib, play yard, and crib mattresses are commonly used in such establishments.[23]

III. Incident Data and Hazard Patterns [24]

In the NPR, the Commission discussed a total of 439 incidents associated with crib mattresses, including 116 reported fatalities and 323 reported nonfatal incidents or concerns, occurring from January 1, 2010 to March 31, 2020. Since that data extraction, CPSC staff identified an additional 55 incidents entered into the CPSRMS and the NEISS databases from April 1, 2020 to April 30, 2021, including 23 reported fatalities and 32 reported nonfatal incidents or concerns

[14] *See* Staff's Final Rule Briefing Package at Tab E for additional information on the marketing and use of crib mattresses.

[15] November 2019 Statista estimates, Grand View Research.

[16] Based on staff's compiled search results of data available on the internet, April–June 2021.

[17] Price estimated from data available on the internet, collected between April–June 2021.

[18] Determinations were made using information from Dun & Bradstreet, as well as from websites.

[19] Respondents were asked to include in their count of cribs owned, cribs that had been converted into toddler beds; but they were instructed to include only the time used in the product *as a crib,* in response to use questions.

[20] In addition to the products in use in households with young children, as estimated from the survey, cribs and crib mattresses are probably in use in some households without young children (*e.g.,* un-surveyed homes of older adults providing care for grandchildren).

[21] Child Care Center estimate of entire United States (2018, April 27). *http://childcarecenter.us/.*

[22] U.S. Bureau of Labor Statistics, ''Quarterly Census of Employment and Wages,'' April 2018. *http://www.bls.gov/iag/tgs/iag721.htm.*

[23] Staff contacts included phone inquiries with day care and hotel establishments.

[24] *See* Staff's Final Rule Briefing Package at Tab B, for additional information on staff's review of crib mattress incidents.

associated with crib mattresses. Accordingly, for the final rule, the Commission is aware of 494 reports associated with a crib mattress, including 139 fatalities and 355 nonfatalities reported from January 1, 2010 through April 30, 2021.[25]

CPSC staff identified 21 NEISS cases associated with a crib mattress in the NPR, and zero NEISS cases received during the update between April 1, 2020 and April 30, 2021. Because the data did not meet the minimum criteria for reporting an estimate,[26] the Commission includes the 19 NEISS injuries and two NEISS fatalities with the rest of the reported incident data described in this final rule.

Table 1 presents hazard categories for all incidents reported from January 1, 2010 through April 30, 2021. Since the NPR, CPSC received 11 reported fatalities[27] involving crib mattress fit issues, and 19 reports of nonfatal incidents involving mattresses that are considered too soft.[28] Generally, the cause of death in reports describing a fatal incident stated the death to be caused by asphyxia, suffocation, or SIDS. CPSC staff categorized the fatal and nonfatal reports into hazard scenarios based on the best available information.

TABLE 1—FATAL AND NONFATAL REPORTS ASSOCIATED WITH CRIB MATTRESSES BY HAZARD CATEGORY AND DATE RECEIVED BY CPSC DURING JANUARY 1, 2010–APRIL 30, 2021

Date received by CPSC	January 1, 2010–March 31, 2020 (reported incidents in the NPR)		April 1, 2020–April 30, 2021 (reported incidents since the NPR)		January 1, 2010–April 30, 2021
Hazard category	Fatal reports	Nonfatal reports	Fatal reports	Nonfatal reports	Total reports
Chemical/Flammability	0	23	0	3	26
Coil or Spring	0	124	0	4	128
Crib Mattress Used in a Play Yard	2	1	0	1	4
Expand or Inflate	0	6	0	0	6
Face in Mattress	13	1	3	0	17
Fit Issues	20	88	11	3	122
Found Prone	66	3	9	0	78
Mattress Falls Apart	0	18	0	0	18
Softness	0	36	0	19	55
Multiple Contributing Factors (MCF)	15	17	0	2	34
Other	0	6	0	0	6
Total Reports	116	323	23	32	494

Source: CPSRMS and NEISS databases. Reporting is ongoing; so 2019–2021 data are incomplete.

Table 2 presents the year of incident or death of the reported cases, for the incidents reported in the NPR and incidents reported since the NPR. Since the NPR, deaths continue to be reported in the most recent years, 2018 and 2019, even when there is typically an approximate 2-year time lag in complete reporting of deaths to CPSC. The NPR stated that 13 deaths were reported to have occurred in 2018, and 4 deaths in 2019. Since the NPR, 15 and 17 deaths were reported to have occurred in the years 2018 and 2019, respectively.

TABLE 2—REPORTS ASSOCIATED WITH CRIB MATTRESSES BY YEAR OF INCIDENT AND DATE RECEIVED BY CPSC DURING JANUARY 1, 2010–APRIL 30, 2021

Date received by CPSC	January 1, 2010–March 31, 2020 (reported incidents in the NPR)		April 1, 2020–April 30, 2021 (reported incidents since the NPR)		January 1, 2010–April 30, 2021 (total reports)	
Year of incident or death	Fatal reports	Nonfatal reports	Fatal reports[29]	Nonfatal reports	Total fatal reports	Total nonfatal reports
2010	20	43	0	0	20	43
2011	11	19	0	0	11	19
2012	4	27	0	0	4	27
2013	7	31	0	0	7	31
2014	13	28	0	0	13	28
2015	11	34	0	0	11	34
2016	8	40	1	0	9	40
2017	25	48	0	0	25	48
2018	13	33	2	0	15	33
2019	4	18	13	2	17	20
2020	0	2	6	19	6	21
2021	0	0	1	11	1	11
Total Reports	116	323	23	32	139	355

Source: CPSRMS and NEISS databases. Reporting is ongoing; so 2019–2021 data are incomplete.

[25] Of the 494 reports, 21 were from the NEISS.

[26] NEISS estimates are reportable, provided the sample count is greater than 20, the national estimate is 1,200 or greater, and the coefficient of variation (CV) is less than 0.33.

[27] None of the fatal incident reports stated that the fatality had a witness. Thus, each case involves some degree of speculation as to how the incident occurred. Incident details are often vague concerning how the infant was positioned when initially found and what additional items present in the crib environment may have contributed to the fatality. Some incidents have conflicting reports from multiple sources describing the details of the incident.

[28] Staff initially extracted incident reports and NEISS injury cases using nine product codes, with no other restrictions on the extraction criteria. Staff then reviewed each record to determine whether a report was associated with a crib mattress. Staff searched the following product codes: *Playpens and play yards* (1513), *portable cribs* (1529), *bassinets or cradles* (1537), *baby mattresses or pads* (1542), *cribs, nonportable* (1543), *cribs, not specified* (1545), *mattresses, not specified* (4010*), toddler beds* (4082), and a catch-all product code 9101. As in the data extraction for the NPR, some of the nonfatal reports described concerns about potential hazards associated with a crib mattress, without an actual incident occurring.

[29] CPSC received a death certificate for one fatality in September 2017, and subsequently, CPSC investigated this incident. However, staff did not receive the investigation information until November 2020.

A. Fatal Reports

CPSC is aware of 139 reported deaths associated with crib mattresses that were reported to have occurred between January 1, 2010 and April 30, 2021. Table 3 presents hazard categories for these reported fatalities.

TABLE 3—REPORTED FATALITIES ASSOCIATED WITH CRIB MATTRESSES BY HAZARD CATEGORY AND DATE RECEIVED BY CPSC DURING JANUARY 1, 2010–APRIL 30, 2021

Date received by CPSC	January 1, 2010–March 31, 2020	April 1, 2020–April 30, 2021	January 1, 2010–April 30, 2021
Hazard category	Reported incidents in the NPR	Reported incidents since the NPR	Total fatal reports
Crib Mattress Used in a Play Yard	2	0	2
Face in Mattress	13	3	16
Fit Issues	20	11	31
Found Prone	66	9	75
Multiple Contributing Factors (MCF)	15	0	15
Total Reports	116	23	139

Source: CPSRMS and NEISS databases. Reporting is ongoing; so 2019–2021 data are incomplete.

Below, we describe the hazard patterns involving a fatality associated with a crib mattress.

1. *Crib Mattress Used in a Play Yard:* One percent of the fatalities involved use of a crib mattress in a play yard (2 out of 139). Reports state that infants were found wedged between the crib mattress and the mesh of the play yard, due to the crib mattress not fitting snugly in the play yard.

2. *Face in Mattress:* Twelve percent (16 out of 139) of fatalities were associated with the face of an infant, when found, reportedly in contact with a crib mattress or crib sheet covering the crib mattress. Based on the available information about each fatality, bedding was present in the sleeping environment in some of these reports. However, bedding was not touching the infant, nor did staff determine that the bedding was a contributing factor in the death.

3. *Fit Issues:* Twenty-two percent (31 out of 139) of fatalities involved issues with the fit of a crib mattress in the sleeping environment. In all of these fatalities, the infants became wedged in gaps between at least one of the sides of a crib mattress and the crib rails or play yard mesh.

4. *Found Prone:* Fifty-four percent (75 out of 139) of fatalities involved an infant found in a prone position with no mention of whether the face of the child was in contact with the crib mattress or crib sheet, and no mention of the face being obstructed by other crib bedding, or other items in the sleep environment. Given the available information about each fatality, bedding was present in the sleeping environment in some of these reports, but staff was unable to determine that bedding was a contributing factor in the deaths.

5. *Multiple Contributing Factors (MCF):* Eleven percent (15 out of 139) of fatalities involved multiple factors that potentially played a role in the fatality, and the crib mattress was likely one of the contributing factors. Examples of other contributing factors are entrapment between the mattress and bumper pads, entrapment between the mattress and a crib rail with limb entrapment, usage of a swaddle, sharing of the sleep environment with another infant, and congenital or recent health conditions.

The oldest fatalities were: Two, 3-year-old, and two, 2-year-old children. CPSC observed considerably more reported prone fatalities between the ages of 1-month-old and 5-months-old, and most of the deaths in the fit, face in mattress, and MCF hazard categories involved infants between the ages of 1-month-old and 8-months-old, compared to other ages. Among the 23 deaths reported since the NPR, 19 were to infants 8 months old or younger, and the remainder included one 11-month-old, one 12-month-old, one 21-month-old, and one 38-month-old.

B. Reported Nonfatal Incidents and Concerns

CPSC is aware of 355 reported nonfatal incidents and concerns associated with crib mattresses that were reported to have occurred between January 1, 2010 and April 30, 2021. Table 4 presents the hazard categories associated with these reported nonfatal crib mattress incidents.

TABLE 4—NONFATAL REPORTS ASSOCIATED WITH CRIB MATTRESSES BY HAZARD CATEGORY AND DATE RECEIVED BY CPSC DURING JANUARY 1, 2010–APRIL 30, 2021

Date received by CPSC	January 1, 2010–March 31, 2020	April 1, 2020–April 30, 2021	January 1, 2010–April 30, 2021
Hazard category	Reported incidents in the NPR	Reported incidents since the NPR	Total nonfatal reports
Chemical/Flammability	23	3	26
Coil or Spring	124	4	128
Crib Mattress Used in a Play Yard	1	1	2
Expand or Inflate	6	0	6
Face in Mattress	1	0	1
Fit Issues	88	3	91
Found Prone	3	0	3
Mattress Falls Apart	18	0	18
Softness	36	19	55
Multiple Contributing Factors (MCF)	17	2	19
Other	6	0	6
Total Reports	323	32	355

Source: CPSRMS and NEISS databases. Reporting is ongoing; so 2019–2021 data are incomplete.

1. *Chemical/Flammability:* Seven percent (26 out of 355) of the nonfatal incidents reported a crib mattress having a chemical odor (6), causing rashes (8), developing severe allergies (1), or not meeting mandatory federal flammability standards (11). Three of these 26 incidents were reported between April 1, 2020 and April 30, 2021. Among these three incidents, two involved emergency department treatment from rashes or allergy symptoms, and one incident mentions headaches from foul odor with unspecified severity.

2. *Coil or Spring:* Thirty-six percent (128 out of 355) of nonfatal incidents involved a coil or spring found protruding through the crib mattress. Four of these 128 incidents were reported between April 1, 2020 and April 30, 2021. Among these four incidents, one involved a knee laceration with the level of care not known, and the other three incidents reported an incident with no injury.

3. *Crib Mattress Used in a Play Yard:* One percent (2 out of 355) of nonfatal incidents involved a crib mattress being used in a play yard. One of these two incidents was reported between April 1, 2020 and April 30, 2021. In the one new incident, a child had an arm become entrapped on the side or under the mattress.

4. *Expand or Inflate:* Two percent (6 out of 355) of nonfatal incidents involved a crib mattress that failed to expand or inflate properly. None of these six incidents were reported between April 1, 2020 and April 30, 2021. CPSC identified related hazards, including fit issues with gaps appearing around the crib mattress causing entrapment or wedging, and an uneven crib mattress that may cause an infant to roll over.

5. *Face in Mattress:* Less than 1 percent (1 out of 355) of nonfatal incidents involved an infant found limp, pale, and with blue around the lips while face down in contact with a crib mattress. CPSC staff found no other details about the sleep environment in this incident involving a 1-month-old infant who was admitted to the hospital. This incident was reported in the NPR data set.

6. *Fit Issue:* Twenty-six percent (91 out of 355) of nonfatal incidents involved issues with the fit of a crib mattress in the sleeping environment, three of which were reported between April 1, 2020 and April 30, 2021. Among these three incidents, one child was treated in the emergency department after falling out of the crib due to a mattress that was too thick; one child received marks on the face due to entrapment issues with an unknown level of treatment; and one incident occurred with no injury reported. In all of these reports, staff determined that gaps were present on one or more sides around the perimeter of a crib mattress, creating wedging or entrapment hazard between the crib mattress and the crib rails or play yard mesh.

7. *Found Prone:* One percent (3 out of 355) of nonfatal incidents involved an infant found in a prone position without any mention of the face being in contact with the mattress or crib sheet, and no mention of the face being obstructed by other crib bedding or other items in the sleep environment. Staff found no other details about the sleep environment in any of these three reported incidents. None of these three incidents were reported between April 1, 2020 and April 30, 2021.

8. *Mattress Falls Apart:* Five percent (18 out of 355) of nonfatal incidents involved part of a crib mattress coming apart. In most of these reports, the seams of the mattress unraveled, causing: A strangulation hazard due to the stitching of the mattress being exposed; and a choking or ingestion hazard due to the inner filling coming out of the mattress in small pieces and into the sleep environment. Examples of reported small pieces of a crib mattress filling that came apart are fibers, string, or wool. Staff found that in six incidents, string from crib mattress seams or piping was found wrapped around the neck of the infant, which could have led to a serious outcome if the child was not found in time. One incident involved an infant choking on a plastic piece of ''shredded'' crib mattress, and one incident involved a child who was treated and released from the hospital emergency department due to ingesting plastic pieces of a crib mattress. None of these 18 incidents were reported between April 1, 2020 and April 30, 2021.

9. *Softness:* Fifteen percent (55 out of 355) of nonfatal incidents involved a crib mattress inner cushioning that was reportedly too soft. CPSC staff found 33 reports of depressions or indentations in the crib mattress, accompanied by the following descriptions: ''bunches up/squishy,'' ''dent/depression/dips/indentation/sags/sinks in/smashed/sunken,'' and ''deflates/like an air mattress not fully inflated.'' Twelve reports describe a crib sheet being placed on a crib mattress and causing the mattress to bend or bow, resulting in a gap or fit issue between the mattress and crib rails, creating an entrapment hazard. Four reports claim that a crib mattress is not breathable. Six reports allege that a crib mattress is too thin and that the inner cushioning is too soft. Of these 55 incidents, 19 were reported between April 1, 2020 and April 30, 2021. All 19 of these incidents involved an incident with no injury reported.

10. *Multiple Contributing Factors (MCF):* Five percent (19 out of 355) of nonfatal incidents involved multiple factors that played a role, of which the crib mattress was likely one factor. Two of these 19 incidents were reported between April 1, 2020 and April 30, 2021. One incident involved a mattress that was reported to be too firm and a child who broke out in rashes, with a level of care not known; and one incident involved a slat entrapment hazard, with no injury reported.

11. *Other:* Two percent (6 out of 355) of nonfatal incidents involved miscellaneous other issues associated with a crib mattress. None of these six incidents were reported between April 1, 2020 and April 30, 2021. Reports in this category included: A blade found in a crib mattress; an infant's arm was ''tangled in a crib mattress''; an infant ''slipped on a crib mattress,'' causing a slat entrapment; an infant's arm became ''stuck on a crib mattress''; a crib mattress had a loose plastic bag for a cover; and a concern about crib mattresses not having proper warning labels to direct caregivers to place infants on their backs when putting them down in a crib.

The hazard categories with the most reported nonfatal incidents associated with crib mattresses are issues with coils or springs, and crib mattresses that do not fit properly in the sleep environment. In the most recent years, from January 2018 to April 2021, CPSC staff observed fewer nonfatal reports of coil or spring issues associated with crib mattresses, compared to years 2014 through 2017. Eighty-six percent (78 out of 91 nonfatal reports) of nonfatal reports involving fit issues occurred between 2010 and 2015.

C. Explanation of Hazards Associated With Crib Mattress Use [30]

After reviewing the incident data, CPSC staff identified various mattress-use factors associated with deaths and serious injuries related to sudden and unexpected infant death (SUID), including, but not limited to, prone positioning of sleeping infants, soft bedding added to sleep areas,

[30] Staff's NPR Briefing Package at Tabs C and E contain more detailed analysis of incidents and hazards associated with crib mattress use.

and gaps/pockets between mattresses and infant product sides.[31 32 33] Physiologically, infants experiencing a compromised airflow are likely to undergo a cycle of decreased heart and respiration rate, resulting eventually in fatal cessation of breathing. Numerous public awareness campaigns have aimed to educate caregivers regarding the identified hazards; these campaigns include: ''Back to Sleep'' (Moon *et al.,* 2016, as cited in Fors Marsh Group, 2019), the ''ABCs of Safe Sleep'' (alone (no bed sharing), back-sleeping, and crib uncluttered),[34] and ''Safe Sleep/Bare is Best.''[35 36] Health and safety advocates, including the AAP, CDC,[37] CPSC, and Kids in Danger (KID)[38] support these efforts.

To make infant sleep environments more comfortable, caregivers commonly use soft bedding and after-market mattresses, instead of, or in addition to, an OEM mattress. Infants can maneuver themselves into vulnerable positions in a sleep environment, from which they cannot free themselves:

> Infants in the age range associated with fatal incidents, i.e., between 2 and 6 months, develop new skills, such as rolling over and crawling, in stages. According to Bayley (1969), several developmental milestones occur within the first 6 months of life; some notable motor skills typically achieved are turning from side to back (average age: 1.8 months old), turning from back to side (average age: 4.4 months old), and turning from back to stomach (average age: 6.4 months old). Children as young as 8 to 12 weeks are likely to move around a play yard, including moving to the edge and possibly moving into vulnerable situations. However, children may not be able to remove themselves by reversing their actions because they may not have developed the skill.[39]

Infants can become trapped in a gap between a crib mattress and the side wall(s) of their sleep environment, with their nose and mouth pressed against the mattress or side wall, experiencing compromised airflow. Gap entrapment is a hazard associated with ill-fitting mattresses in full-size cribs, play yards, and non-full-size cribs. To minimize the risk for entrapment in a gap, a full-size crib and full-size crib mattress that meet the applicable standards would allow a maximum side gap of 1⅜ inches.[40] Given non-flexible sides and infant head dimensions,[41] requirements in these standards work in tandem to help prevent head entrapment and suffocation between the mattress and crib sides, even though a full-size crib manufacturer is not required to provide the mattress.[42] Still, incidents of gap entrapment involving these products continue to occur, including when the full-size crib and *non-compressed* full-size crib mattress measure the appropriate dimensions. For example, gaps involving full-size crib mattresses can develop if the mattresses are too soft, such as when the mattress is compressed by mattress sheets.

Gaps between the infant's mattress and sleep product sides are especially hazardous when after-market mattresses with thicker depth dimensions than the OEM mattress are used in products with flexible (*e.g.,* mesh or fabric) sides, such as play yards and non-rigid-sided portable cribs. The side walls of these products typically expand more towards the center of the side wall, and consequently, as the thickness of mattresses used in these products increases, the risk of gap entrapment often increases as well.

D. Product Recalls[43]

In the NPR, CPSC stated that from June 1, 2010 to June 1, 2020, CPSC negotiated five consumer-level recalls involving crib mattresses to mitigate against risks of flammability and suffocation. Four recalls involved non-compliance with mandatory federal flammability requirements. These four recalls included approximately 80,000 units in total. The Commission cannot provide an exact number of units because of a lack of differentiation between crib and adult mattress populations in recalls that included both. The fifth recall of crib mattresses involved a dimensional issue, where the crib mattress models were ill-fitting, presenting an entrapment hazard. This recall included approximately 300,000 units. CPSC has not announced any crib mattress recalls since the NPR.

IV. International Standards for Crib Mattresses[44]

As stated in the NPR, the Commission is aware of two international voluntary standards pertaining to crib mattresses:[45]

- BS EN 16890:2017—Children's Furniture—Mattresses for cots and cribs—Safety requirements and test methods (BS EN 16890); and
- Australian/New Zealand Standard 8811.1:2013—Methods of testing infant products (AS/NZS 8811.1).

In the NPR, the Commission compared ASTM F2933–19 to the international standards AS/NZS 8811.1 and EN 16890, and determined that the ASTM standard is equivalent or more stringent than these standards to address most incidents associated with the use of crib mattresses in the United States. 85 FR at 67913–14. This

[31] The Centers for Disease Control and Prevention (CDC) defines ''SUID'' as the sudden and unexpected death of a baby less than 1-year-old, in which the cause was not obvious before investigation. See *https://www.cdc.gov/sids/about/index.htm?CDC_AA_refVal=https%3A%2F%2Fwww.cdc.gov%2Fsids%2FAboutSUIDandSIDS.htm;* accessed July 20, 2020.

[32] The American Academy of Pediatrics (AAP, 2016) explains that SUID, also known as ''sudden unexpected death in infancy'' (SUDI), includes explained and unexplained deaths, and it can be attributed to suffocation, asphyxia, entrapment, infection, ingestions, metabolic diseases, arrhythmia-associated cardiac channelopathies, and trauma. See: *https://pediatrics.aappublications.org/content/pediatrics/138/5/e20162938.full.pdf;* accessed May 5, 2020.

[33] Sudden infant death syndrome (SIDS) is a subcategory of SUID that refers to infant deaths that cannot be explained after a thorough case investigation. The terms SUID and SIDS are used interchangeably, as SIDS commonly is used to refer to SUID in warning labels and articles and given that consumers are more familiar with the term SIDS as opposed to SUID.

[34] See *https://www.aappublications.org/news/2016/10/24/SIDS102416;* accessed May 7, 2020.

[35] See *https://www.cpsc.gov/Safety-Education/Neighborhood-Safety-Network/Posters/Safe-Sleep-for-Babies;* accessed May 6, 2020.

[36] See *https://www.cpsc.gov/safety-education/safety-guides/kids-and-babies-cribs/safe-sleepbare-best* and *https://www.nationwidechildrens.org/family-resources-education/health-wellness-and-safety-resources/helping-hands/safe-sleep-practices-for-babies;* accessed May 11, 2020.

[37] See *https://www.cdc.gov/vitalsigns/safesleep/index.html;* accessed May 2, 2020.

[38] See *https://kidsindanger.org/protect-your-child/sleep/;* accessed May 6, 2020.

[39] See page 5, *https://www.cpsc.gov/s3fs-public/Petition%20CP%2015-2%20%20Petition%20Requesting%20Ban%20on%20Supplemental%20Matress%20for%20Play%20Yards%20with%20non-Rigid%20Sides%20May%2010%202017__3.pdf;* accessed September 14, 2020.

[40] Per 16 CFR part 1219, and by reference ASTM F1169–1919, a full-size crib must have interior dimensions of 28 ± ⅝ inches wide by 52⅜ ± ⅝ inches long. Per the existing voluntary standard for crib mattresses, ASTM F2933–21, a full-size crib mattress shall measure at least 27¼ inches wide by 51⅝ inches long by 6 inches thick.

[41] According to Snyder (1975), the 5th percentile head breadth, *i.e.,* the maximum breadth of the head above and behind the ears, of children 0 to 3 months old is approximately 3 3/10 inches, which is more than twice as wide as the maximum allowable side gap between full-size cribs and full-size crib mattresses. ESHF staff selected head ''breadth,'' as opposed to length or height, to err on the side of caution, as head breadth is the smallest of these three head dimensions that could cause a fatal entrapment. Similarly, staff selected the 5th percentile measurement for 0-to-3-month-old infants to reduce the likelihood of death or serious injury to those most vulnerable to the identified hazards.

[42] See *https://www.cpsc.gov/Business--Manufacturing/Business-Education/Business-Guidance/Full-Size-Baby-Cribs/,* accessed May 1, 2020.

[43] *See* Briefing Memorandum, Staff's Final Rule Briefing Package.

[44] *See* Staff's NPR Briefing Package at Tab B.

[45] The Commission is also aware of a draft, unpublished, standard, ISO 23767 *Children's furniture—Mattresses for cots and cribs—Safety requirements and test methods.* Although this draft ISO standard is not yet an official standard, CPSC staff reviewed it for relevancy and found that it is nearly identical to BS EN 16890.

assessment is applicable to ASTM F2933–21 as well.[46]

Each of these international standards includes a mattress firmness test, while the ASTM standard does not. To address this issue, the final rule includes a mattress firmness test, as proposed in the NPR, based on the mattress firmness test in the AS/NZS standard. With the exception of mattress firmness, the Commission concludes that ASTM F2933–21 is equivalent to, or more stringent than, AS/NZS 8811.1 or EN 16890, because it more fully addresses the hazard patterns identified by CPSC staff in the reported incident data. Compared to these international standards, ASTM F2933–21 is more comprehensive because it also addresses non-full-size crib mattresses and after-market mattresses for play yards and non-full-size cribs. Furthermore, the Commission notes that like ASTM F2933–19, ASTM F2933–21 was developed through collaboration between CPSC staff and stakeholders. The voluntary standard has been revised four times to address incident data provided by CPSC staff. Therefore, the Commission concludes that ASTM F2933–21, when modified to include a test for mattress firmness based on sections 6 and 8 of AS/NZS 8811.1:2013, is more appropriate than AS/NZS 8811.1:2013 or EN 16890 to address hazard patterns associated with crib mattresses.

V. Voluntary Standard—ASTM F2933[47]

A. History of ASTM F2933

The ASTM Committee F15 on Consumer Products first published the voluntary standard for crib mattresses in 2013, as ASTM F2933–13, *Standard Consumer Safety Specification for Crib Mattresses.* The first publication established requirements for the standard and addressed the following issues:

- Sharp points and sharp edges,[48]
- Small parts,
- Lead and other toxic substances in paints,
- Finger entrapment,
- Mattress dimension conformity,
- Mattress thickness, and
- Marking and labeling.

Since 2013, ASTM has revised and updated the voluntary standard four times to address safety issues, as outlined below:

ASTM F2933–16 (approved on 12/1/2016):

- Revised warning label permanency requirements in 5.6.1, to include requirement that ''[n]on-coated paper warning label shall not be applied on either side of sleeping surface.'' Added a note under this section, stating that non-coated paper label may absorb water and can deteriorate.

ASTM F2933–18 (approved 8/15/2018):

- Revised scope to include a new section 1.5, stating the standard was developed in accordance with internationally recognized principles on standardization;
- Added definition of ''after-market mattress for play yard or non-full-size crib,'' to section 3, Terminology;
- Added a new requirement for after-market mattresses for play yards and non-full-size crib mattresses in section 5, General Requirements, stating that after-market mattresses for soft-sided and non-rectangular, rigid-sided products shall have the same thickness, floor support structure, and attachment method as the mattress it is intended to replace and shall meet the specifications of Mattress Vertical Displacement test from ASTM F406–19, *Standard Consumer Safety Specification for Non-Full-Size Baby Cribs/Play Yards;*
- Added additional marking and labeling requirements for after-market mattresses in sections 7.5 through 7.7. To comply with these sections, after-market mattresses and their retail packaging shall include specified suffocation warning language related to hazardous gaps and stacked mattresses. Sections 7.5 and 7.6 have additional requirements that distinguish between types of products. Section 7.5 has requirements specific to mesh/fabric-sided and rigid-sided, non-rectangular products, including as follows: After-market mattresses shall have all the warnings that the original manufacturer had and provide instructions that are on the original mattress, and both the after-market mattress and the retail packaging shall identify the brand and model numbers of products in which it is intended to be used. Section 7.6 contains requirements specific to rigid sided rectangular products including as follows: After-market mattresses and their retail packaging shall have a specified statement regarding mattress dimensions and fit.

ASTM F2933–19 (approved on 6/15/2019):

- Added a new requirement for mattress seam stitching in section 5, General Requirements, requiring that all seam stitching that is accessible to the occupant be lock stitching.

ASTM F2933–21 (approved on 6/15/2021):

- Replaced requirement that ''aftermarket mattresses for soft-sided and non-rectangular, rigid-sided products shall have the same thickness, floor support structure, and attachment method as the mattress it is intended to replace'' with: (1) A requirement that aftermarket mattresses meet all applicable listed requirements of ASTM F406 *Standard Consumer Safety Specification for Non-Full-Size Baby Cribs/Play Yards* for the OEM mattresses that they are intended to replace; (2) requirements that the after-market mattress must be at least the same size as the original equipment mattress, so long as it lays flat on the support structure; and (3) requirements that the after-market mattress floor support structure be at least as thick as the original equipment mattress floor support structure. Accordingly, play yard mattresses may be thicker than that provided by the original equipment manufacturer, but are still limited to a maximum of 1½ inches, as required by ASTM F406.
- Adds requirement specifying that after-market mattresses must have equivalent storage accommodations for instructions as the original equipment mattress.

B. Assessment of ASTM F2933–21[49]

ASTM published ASTM F2933–21 in July 2021, to address requirements for after-market mattresses for non-full-size cribs and play yards. Beginning with ASTM F2933–18, after-market mattresses were required to meet the same requirements of OEM mattresses for play yards. ASTM members believed that, as written, the requirements for after-market mattresses were design restrictive. Accordingly, the rationale for the 2021 revisions for after-market mattress requirements was to be less design restrictive, by more directly relying on performance requirements under the appropriate product standard, including additional references to requirements in the voluntary standard for play yards and non-full-size cribs, ASTM F406.

The purpose of having after-market mattresses meet the same requirements as OEM mattresses is to reduce the risk of infant entrapment and suffocation associated with after-market mattresses

[46] *See* Staff's Final Rule Briefing Package at Tab C.

[47] *See* Staff's NPR Briefing Package at Tab B for additional information about the history and performance requirements up through the 2019 version of ASTM F2933. Tab C of Staff's Final Rule Briefing Package contains information about the revisions in ASTM F2933–21.

[48] Tapered ends that do not meet the requirements of 16 CFR 1500.48 and metal or glass tapered surfaces that do not meet the requirements of 16 CFR 1500.49.

[49] *See* Tab C of Staff's Final Rule Briefing Package for the full assessment of ASTM F2933–21.

that are too thick, or do not fit correctly, or attach to a play yard or non-full-size crib. ASTM developed the latest requirements for after-market mattresses, published in ASTM F2933–21, in collaboration with CPSC staff, the ASTM Play Yard Vertical Displacement Task Group, the Play Yard Mattress Fit and Thickness Task Group, and the ASTM Non-Segmented Mattress Task Group. Below we summarize and assess changes to ASTM F2933–21 that occurred after publication of the NPR.

1. In section 5.9 of ASTM F2933–21, ''Product'' was clarified to refer to the play yard or non-full-size crib, rather than the mattress. Other clarifications of the mattress and the product were made throughout this section. These term clarifications are appropriate and adequate to clarify which requirements in the standard apply to which products. However, the final rule removes non-full-size cribs from this section, to be consistent with changes to section 5.7.2 regarding non-full-size mattress size and thickness.

2. In section 5.9.1.1 of ASTM F2933–21, the requirement was removed that the after-market mattress have the same thickness, floor support structure, and attachment method as the mattress it is intended to replace. The thickness and floor support structure requirements were replaced in ASTM F2933–21, as described in paragraphs 5 and 6 below. The final rule adopts these new requirements for after-market mattresses in ASTM F2933–21, as written. Before this change, an after-market mattress for a play yard could meet the requirements of ASTM F406 when tested with the product it is intended to be used with, but still not meet the requirements of this section, due to having a different mattress thickness or different floor support structure design as the OEM mattress. For example, non-segmented, *i.e.,* non-folding, after-market mattresses for products that included a segmented mattress would not be allowed. Similarly, if the OEM play yard mattress was ⅜ inches thick, an after-market mattress with a thickness of ⅞ inches, and that would otherwise meet the requirements of an OEM mattress, would not be allowed.

ASTM removed the requirement that after-market mattresses be exactly the same as the OEM mattress, and instead, requires that after-market mattresses be tested to the same requirements as OEM mattresses (see 3 below). Moreover, after-market mattresses must meet additional requirements regarding size, floor support structure, and instruction storage (5, 6, and 7 below, respectively). Based on this change, the two examples described above would be allowed, so long as they meet all of the requirements for after-market mattresses. A 3-inch thick, after-market play yard mattress would not be allowed, however, due to it having a greater thickness than allowed for OEM mattresses in ASTM F406. Because after-market mattresses must meet the same dimension and performance requirements as OEM mattresses, as well as additional requirements, this change will not reduce the safety of after-market mattresses.

3. In the new section 5.9.1.1 of ASTM F2933–21, ASTM added the following list of requirements from ASTM F406: *Stability; Cord/Strap Length; Crib Side Height; Height of Sides;* and *Floor Strength.* The following requirements from ASTM F406 were already listed: *Mattress; Mattresses for Rigid-Sided Products; Mattress Vertical Displacement.* The requirements in ASTM F406 applicable to play yard mattresses are those for *Mattress, Stability, Cord/Strap Length, Height of Sides, Floor Strength,* and *Mattress Vertical Displacement.* ASTM F2933–21 now includes all of these listed requirements. The final rule, however, removes *Mattresses for Rigid-Sided Products* and *Crib Side Height* from this section, because these requirements apply to non-full-size cribs, which are addressed in the final rule in section 5.7.2.

4. In the new section 5.9.1.2 of ASTM F2933–21, ASTM replaced the term ''replacement mattress'' with ''aftermarket mattress.'' The final rule includes this modification, and it is consistent with modifications proposed in the NPR.

5. ASTM added the following requirement in a new section 5.9.1.3 in ASTM F2933–21: ''The aftermarket mattress must be at least the same size as the original equipment mattress or larger and lay flat on the floor of the product, in contact with the play yard mattress support structure.'' Some OEM play yard mattresses are made particularly thin, contributing to the consumer perception that play yard mattresses are uncomfortable, and potentially resulting in consumers placing additional soft bedding in infant sleep environments. With this change, after-market mattresses can be the same size or larger (thicker and/or wider) than the OEM mattress, so long as they lay flat and meet the other applicable dimension and test requirements for play yard mattresses, including maximum dimension requirements. This allows after-market play yard mattresses, which are thicker than OEM mattresses, but continue to meet maximum dimension requirements (*e.g.,* an after-market mattress with foam ⅞ inches thick may be acceptable, but foam more than 1-inch thick, would not be acceptable). The final rule adopts this change as part of ASTM F2933–21, because it is unlikely to reduce safety, and may improve safety by allowing appropriately sized, after-market mattresses that could combat the consumer perception of uncomfortable play yard mattresses. This change, therefore, is an adequate replacement for the mattress size requirements originally in section 5.9.1.1.

6. ASTM added the following requirement in section 5.9.1.4 of ASTM F2933–21: ''If the original equipment mattress includes a floor support structure, the aftermarket mattress must include a floor support structure that is at least as thick as the original equipment mattress floor support structure.'' This change allows for after-market mattresses with a different floor support structure than the OEM mattress (*e.g.,* an after-market non-segmented mattress in place of an OEM segmented mattress), so long as the floor support structure is at least as thick as the original, and the mattress meets the other applicable requirements for play yard mattresses. This change, along with the requirement that the mattress must lay flat on the play yard support structure, will have no effect on safety, because it ensures that after-market play yard mattresses with a different support structure than the OEM mattress will still have a similar level of support. The final rule adopts this change as part of ASTM F2933–21, because it is an adequate replacement for the floor support structure requirements originally in section 5.9.1.1.

7. ASTM added the following requirement in section 5.9.1.5 of ASTM F2933–21: ''If the original equipment mattress includes storage accommodations for the product instruction manual, the aftermarket mattress shall provide equivalent storage accommodations for the product instruction manual.'' This is a new requirement for after-market mattresses to have equivalent storage accommodations for instructions as the OEM mattress. The final rule adopts this change as part of ASTM F2933–21, because it improves safety by increasing the likelihood of consumers keeping the product's instruction manual, which may have important safety information, readily accessible.

Based on the foregoing, the final rule incorporates by reference ASTM F2933–21, and adopts these seven changes, except where a change conflicts with the separation of requirements for play yards from the requirements for non-

full-size crib mattresses, as noted in this section. Appendix A to Tab C of Staff's Final Rule Briefing Package outlines the changes to section 5.9 of ASTM F2933–21.

C. Description of Performance Requirements in ASTM F2933–21

In addition to the general requirements typically found in other ASTM juvenile product standards, such as requirements for openings, label permanency, and the prohibition of sharp points/edges, small parts, and lead in paints, section 5 of ASTM F2933–21 contains the following four additional requirements that apply specifically to mattresses for cribs, non-full-size-cribs, and to after-market mattresses for non-full-size cribs and play yards:

• *§ 5.7 Mattress Dimensions:* This section describes the dimensional requirements for full-size crib mattresses, and for non-full-size crib mattresses that are supplied with a non-full-size crib, to prevent an infant from becoming wedged in a gap caused by a too-small crib mattress. To ensure that the crib mattress dimensions are within the allowable range, the test requires a mattress to be placed in a test box and pushed against the side of the box with a force prescribed in the test method.

• *§ 5.7.2.2 Mattress Thickness:* This requirement applies to non-full-size crib mattresses supplied with a non-full-size crib, to prevent occupants from falling out of the product (and extends to after-market mattresses for non-rectangular, non-full-size cribs, as described below for *§ 5.9*). The requirement states that a mattress supplied with a non-full-size crib shall have a thickness that will provide a minimum effective crib-side height dimension of at least 20 inches when the crib side is in its highest adjustable position and the mattress support is in its lowest adjustable position. Additionally, the mattress shall have a thickness that will provide a minimum effective crib-side height dimension of at least 3 inches when the crib side is in its lowest adjustable position, and the mattress support is in its highest adjustable position.

• *§ 5.8 Mattress Seam Stitching:* This requirement applies to all crib mattresses within the scope of the standard and states that all seam stitching that is accessible to the occupant shall be lock stitching to prevent accessible stitching from becoming loose and creating a small part or strangulation hazard.

• *§ 5.9 After-Market Mattress for Play Yards and Non-Full-Size Cribs:* This requirement is for after-market mattresses for play yards and non-full-size cribs, and states that after-market mattresses for soft-sided and non-rectangular, rigid-sided products must meet the following applicable requirements from ASTM F406, *Standard Consumer Safety Specification for Non-Full-Size Baby Cribs/Play Yards: Stability; Cord/Strap Length; Mattress; Mattresses for Rigid sided products; Crib Side Height; Height of Sides; Floor Strength;* and *Mattress Vertical Displacement.* Additionally, the after-market mattress and floor support structure must be at least the same size as the original equipment mattress; it must lay flat on the play yard support structure or floor; and must include equivalent storage accommodations for the instruction manual. Accordingly, these after-market mattresses must meet the same requirements as the OEM mattress. Requirements for OEM mattresses sold with play yards and non-full-size cribs are codified at 16 CFR parts 1220 (non-full-size cribs) and 1221 (play yards), which incorporate by reference ASTM F406. Finally, if the after-market mattress is also intended to be used in a bassinet, it must also meet the requirements in the following sections of ASTM F2194, *Standard Consumer Safety Specification for Bassinets and Cradles,* when tested with each brand and model of product for which it is intended to replace the mattress: *Pad Thickness for Fabric or Mesh-Sided Products; Pad dimensions; Side Height;* and *Bassinets with Segmented Mattresses.*

VI. Adequacy of the Voluntary Standard To Address Crib Mattress Hazards

A. Adequacy of Performance Requirements [50]

ASTM developed ASTM F2933 to mitigate the risk of injury associated with the use of crib mattresses. Hazard-mitigation strategies include performance requirements and instructions and on-product warnings to help inform caretakers of the primary hazards during use of the product. Based on CPSC staff's Engineering, Human Factors, and Health Sciences assessments, Tabs B, C, and E, respectively, of Staff's NPR Briefing Package, and Tabs C and D of Staff's Final Rule Briefing Package, the requirements in the voluntary standard, ASTM F2933–21, adequately address the hazard patterns related to expanding or inflating crib mattresses, mattresses falling apart, and most hazards associated with multiple contributing factors, or other hazards.

However, ASTM F2933–21 does not adequately address the most prevalent or severe identified hazards associated with the use of crib mattresses, such as coil spring issues, face in mattress, fit issues, infants found prone, and mattress softness. The warning labeling for hazard patterns that are within the multiple contributing factors category (*i.e.,* face in mattress, found prone, and softness) are also inadequate. Accordingly, the Commission will finalize the rule with additional requirements, as proposed in the NPR, to make the standard more stringent, to further reduce the risks of death and injury from these hazard patterns. Table 5, based on the final rule incident data, summarizes the staff-identified hazard patterns and states how ASTM F2933–21 addresses each hazard pattern.

TABLE 5—ASSESSMENT OF ASTM F2933–21 TO ADDRESS IDENTIFIED HAZARD PATTERNS

Hazard pattern	Applicable mattresses	How addressed in ASTM F2933–21	Adequacy assessment	Comments
Chemical/Flammability Hazards (odors, rash).	All	16 CFR part 1303 Ban of Lead-Containing Paint 16 CFR part 1500 Hazardous Substances Act Regulations (Sections 5.1 and 5.4). 16 CFR part 1632 Standard for the Flammability of Mattresses and Mattress Pads. 16 CFR part 1633 Standard for the Flammability (Open Flame) of Mattress Sets.	Adequate	Assessed as adequate in NPR. No change in standard.

[50] Staff's NPR Briefing Package at Tab B contains additional details on the CPSC staff's analysis of ASTM F2933–19 and its ability to address identified hazards.

TABLE 5—ASSESSMENT OF ASTM F2933–21 TO ADDRESS IDENTIFIED HAZARD PATTERNS—Continued

Hazard pattern	Applicable mattresses	How addressed in ASTM F2933–21	Adequacy assessment	Comments
Coil or Spring (laceration)	Coil or spring mattresses (primarily full-size).	Prohibition of sharp points (Section 5.2).	Inadequate	Final rule includes additional cyclic testing to identify potential for springs to break through surface during foreseeable use and misuse.
Crib Mattress Used in a Play Yard (suffocation due to ill-fitting mattress).	Aftermarket play yard mattresses.	Labeling requirements, requirements for after-market mattresses. Testing requirements harmonized with ASTM F406. (Sections 5.9 and 7.5).	Adequate	Section VI.A.3 of the preamble assesses the revised requirements for after-market mattresses.
Expand or Inflate (suffocation due to ill-fitting mattress that does not expand or inflate properly).	Foam products, typically full-size and shipped as "bed in a box".	Dimensional conformity, mattress thickness, and labeling requirements (Section 5.7).	Adequate	Hazard is adequately addressed with F2933's dimensional conformity and mattress thickness.
Face in Mattress (suffocation)	All	Labeling requirements (Section 7.3)	Inadequate: See also ESHF[51] memo (Tab D).	Final rule contains a firmness test based on sections 6 and 8 of AS/NZS 8811.1 and revised labeling.
Fit Issues (suffocation due to ill-fitting mattress).	All	Dimensional conformity and after-market mattress requirements (Sections 5.7 and 5.9).	Inadequate	Final rule contains additional fitted sheet compression test for full-size mattresses and extends dimensional requirements in section 5.7 to all after-market non-full-size crib mattresses.
Found Prone (suffocation due to prone position).	All	Labeling requirements (Section 7.3)	Inadequate: See also ESHF memo (Tab D).	Final rule contains a firmness test based on sections 6 and 8 of AS/NZS 8811.1 and revised labeling.
Mattress Falls Apart (choking/ingestion)	All	Mattress seam stitching requirement and small parts prohibition (Sections 5.3 and 5.8).	Adequate	Assessed as adequate in NPR. No change in standard.
Softness (suffocation due to soft surface).	All	Not addressed	Inadequate	Final rule contains a firmness test based on sections 6 and 8 of AS/NZS 8811.1.
Multiple Contributing Factors (MCF) (*e.g.,* entrapment in bumper pads, limb entrapment, crib sharing with another infant, existing health condition).	All	General requirements and warning labels (Sections 5 and 7).	Inadequate	Some of these contributing factors are addressed by additional requirements in the final rule described above, while others are related to another product use or other factor out of the scope of the crib mattresses standard.
Other	All	General requirements and warning labels (Sections 5 and 7).	Adequate	This category includes hazards which are out of scope of the ASTM standard or for which the cause is unclear.

1. Hazard Pattern—Chemical/Flammability Hazards

Seven percent (26 out of 355) of the nonfatal incidents, including 3 incidents identified since the NPR, reported a crib mattress having a chemical odor (6), causing rashes (8), causing severe allergies (1), or mattresses not meeting mandatory federal flammability standards (11). Reports describe infants suffering from rashes, upper respiratory issues, and headaches. The ASTM F2933–21 general requirements section addresses these hazards with the inclusion of 16 CFR part 1632, *Standard for the Flammability of Mattresses and Mattress Pads,* 16 CFR part 1633, *Standard for the Flammability (Open Flame) of Mattress Sets,* and 16 CFR part 1303, *Ban of Lead-Containing Paint and Certain Consumer Products Bearing Lead-Containing Paint.*

2. Hazard Pattern—Coil or Spring

Potential laceration hazards due to an exposed coil or spring account for 36 percent (128 out of 355) of the nonfatal incident reports, including four incidents identified since the NPR. ASTM F2933–21 addresses this hazard by prohibiting sharp points. Due to the high proportion of reported nonfatal incidents, the final rule strengthens the standard with a cyclic impact test, as proposed in the NPR, which entails dropping a 30-pound test mass 250 times in four locations on a test mattress.

Since publication of the NPR, CPSC staff has continued working with the crib mattress cyclic testing task group to refine test requirements that will address the hazard of potential lacerations to infants from an exposed coil or spring. The test was discussed at subcommittee and task group meetings on November 10, 2020, December 9, 2020, and February 16, 2021. During these meetings, ASTM members discussed points they felt needed clarification if the voluntary standard is revised, including the desire for a means to prevent the mattress from moving around during testing. ASTM members stated, for example, that the standard should clarify that the test only applies to coil spring mattresses, and that two mattresses should be required to test both sides of a mattress, because of the potential for destruction of the sample during testing. Accordingly, the final rule includes a modification to the test method, to require two mattresses for testing each side of a mattress.

CPSC staff has typically been in alignment with ASTM members of the Crib Mattress Cyclic Testing task group on how to conduct testing to address the hazard of potential lacerations to infants caused by exposed coils or springs. Public comments were also generally supportive of the test proposed by staff; and the comments encouraged staff to continue working with ASTM to develop the test. Although ASTM informed staff at a subcommittee meeting on June 10, 2021, that a new draft of the ASTM test method had been developed, and members were shown a drawing that appeared to depict a

[51] CPSC's Directorate for Engineering Sciences, Division of Human Factors (ESHF).

revised test location, ASTM has not yet distributed this revised draft to CPSC staff or to other task group members, and there has not been a ballot. Therefore, for the final rule, the Commission clarifies the test procedure and the need for two mattresses, but does not make any additional changes.

3. Hazard Pattern—Crib Mattress Used in a Play Yard

One percent (2 out of 139) of fatal incidents and one percent (2 out of 355) of nonfatal incidents, including one nonfatal incident identified since the NPR, are associated with using a crib mattress in a play yard. The incidents were associated with the use of a crib mattress that did not fit properly in a play yard. ASTM F2933–21 addresses this hazard with warning label requirements, and additionally, newer requirements specifying that after-market play yard mattresses must meet the same requirements as OEM mattresses. These revisions will increase the availability of properly fitting after-market mattresses, and will reduce the likelihood of caregivers using an ill-fitting crib mattress in a play yard. For the final rule, the Commission incorporates by reference ASTM F2933–21, to include these revisions.

One nonfatal incident involved scratches on an infant's back, caused by protruding coils or springs of the crib mattress. The final rule addresses the coil or spring hazard, as described in section VI.A.2, above.

4. Hazard Pattern—Expand or Inflate

In two percent (6 out of 355) of reported nonfatal incidents, a crib mattress failed to expand or inflate properly. All of these incidents were reported in the NPR. This hazard can occur when a mattress is tightly rolled for shipping or packaging purposes, and then does not completely decompress. Related hazards include fit issues with gaps appearing around the crib mattress, causing entrapment or wedging, and an uneven crib mattress that may cause an infant to roll over. Although this hazard is adequately addressed with ASTM F2933's dimensional conformity and mattress thickness requirements, the additional proposed mattress compression test, detailed in section VI.A.6 of this preamble, will strengthen the proposed standard and further reduce injuries associated with the failure of a mattress to expand or inflate fully to prevent hazardous gaps.

5. Hazard Pattern—Face in Mattress

Twelve percent (16 out of 139) of fatal incidents and less than 1 percent (1 out of 355) of nonfatal incidents, including three fatal incidents identified since the NPR, are associated with an infant found face down on a crib mattress. ASTM F2933 does not address this hazard pattern. The Human Factors assessment in the Staff's NPR and Final Rule Briefing Packages provides strengthened warning label recommendations to address this hazard pattern. As proposed in the NPR, the Commission is finalizing the rule with revised warning labels to address this hazard.

6. Hazard Pattern—Fit Issues

Twenty-two percent (31 out of 139) of fatal incidents and 26 percent (91 out of 355) nonfatal incidents, including 11 fatal incidents and three nonfatal incidents identified since the NPR, were associated with the fit of a crib mattress in the sleeping environment.[52] In these reports, gaps between the crib mattress and the crib rail or play yard mesh, on one or more sides around the perimeter of a crib mattress, created a wedging or entrapment hazard. ASTM F2933–21 contains a mattress dimensional conformity test intended to address this hazard. However, staff found from visual inspection and measurement of mattresses tested, that tight-fitting sheets over crib mattresses can create gaps between the corners of the mattress and the interior corner of the crib, creating an entrapment hazard, as seen in Photo 1. Accordingly, ASTM F2933–21 does not adequately address entrapment hazards between the crib mattress and the side of a crib or play yard.

a. Mattress Compression

To strengthen the standard, the Commission is finalizing the rule with the sheet compression test, as proposed in the NPR, with modifications to address the fit issues caused by a tight-fitting sheet.

Photo 1. Reenactment of a head entrapment in a corner gap.
Source: CPSC in-depth investigation

The NPR proposed a test method to address the hazard associated with tight-fitting sheets that compressed a crib mattress to create potentially hazardous gaps. The test method had a conditioned fitted sheet placed on a

[52] Nearly half (11 out of 23) of fatal incidents identified since the NPR are associated with fit issues.

full-size crib mattress. The mattress with the sheet was required to meet all dimensional requirements in ASTM F2933–19.[53] In addition, measured corner gaps were required to be less than 2.25 inches in length, based on the fifth percentile head breadth of 0- to 3-month-old infants,[54] the already-allowed maximum gap of 1 inch between the sides of the crib mattress and the sides of the crib, and a 0.5-inch margin of safety.

After publication of the NPR, ASTM members discussed the NPR test methods during ASTM crib mattress subcommittee and task group meetings on November 10, 2020, December 3, 2020, and February 16, 2021. At these meetings, ASTM members expressed that for the ASTM voluntary standard, they were not in favor of the test method proposed by CPSC in the NPR. Members stated that crib mattress sheets can vary widely in quality and size; and that by assuming the maximum gap of 1 inch between the sides of the crib mattress and the sides of the crib, the test method unfairly penalized larger mattresses. Additionally, ASTM members pointed out that the dimension measurement method in ASTM F2933 was established with soft materials in mind, and that the NPR-proposed test method was overly restrictive for mattresses, by compressing them twice, due to the requirement that this measurement be conducted with the sheet installed.

The ASTM task group decided to develop an alternative test method, presented during meetings on February 25, 2021, and June 9, 2021. In this test method, the maximum allowable 1-inch gap is applied to the minimum allowable mattress dimensions of 51.625 inches x 27.25 inches, to create a rectangle measuring 52.625 inches x 28.25 inches. This rectangle is the projected crib interior. Then, using the head breadth dimension proposed by staff (3.66 inches) minus a 0.51-inch margin of safety, a line is marked 3.15 inches away from the projected crib interior corner, at an angle of 45 degrees to each of the projected crib sides. A 6-inch-high x 6-inch-wide wood block is then used to apply a 2-pound force to the corner of the mattress to recreate the compression force of a fitted sheet. If the front of the block moves beyond the marked line, then the mattress fails. The test is repeated in each corner. ASTM has not balloted the proposed test method.

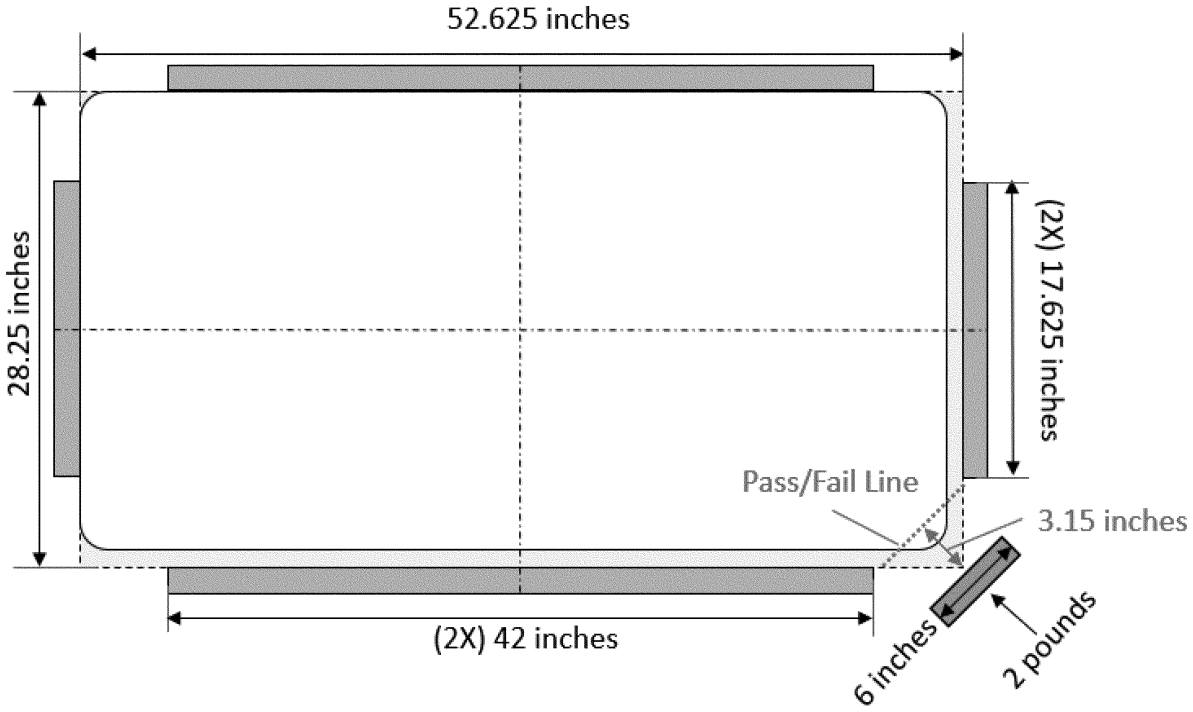

Figure 1. Test fixture proposed by ASTM, as interpreted by CPSC staff.

ASTM members expressed two primary reasons against the test method proposed in the NPR. First, ASTM members stated that crib mattress sheets can vary widely in quality and size. Some public comments agree with this point, suggesting fitted sheets should have separate performance requirements addressed by the ASTM infant bedding subcommittee. CPSC staff has engaged with members of the ASTM Infant Bedding Task Group to reduce the risk of ill-fitting crib mattress fitted sheets and improve sheet performance. Regardless, a crib mattress should not allow a poorly fitted sheet to adjust its dimensions and create a hazardous gap. Staff will continue working with ASTM's Infant Bedding Task Group to address quality concerns regarding fitted sheets intended for crib mattresses, and thereafter, will work with the ASTM Crib Mattress subcommittee to refer to these requirements, as applicable. However, for the final rule, test laboratories can determine the most appropriate sheet for the test, meaning a crib mattress sheet that fits the crib mattress snugly and can be wrapped around the four corners. The Commission did not receive comments that suggested additional methods to improve the sheet

[53] The dimensional requirements are unchanged in ASTM F2933–21.

[54] The 5th percentile head breadth, *i.e.,* the maximum breadth of the head above and behind the ears, of children 0 to 3 months old is approximately 3.66 inches; Snyder, R.G., Schneider, L.W., Owings, C.L., Reynolds, H.M., Golomb, D.H., & Schork, M.A. (1977). Anthropometry of Infants, Children and Youths to Age 18 for Product Safety Design (Report No. UM–HSRI–77–17). Prepared for the U.S. Consumer Product Safety Commission, Washington, DC.

selection process. Accordingly, based on available data, the test method proposed in the NPR is the most accurate test method to test for hazardous gaps caused by sheet compression.

Second, ASTM members stated that the proposed test has the potential to be overly restrictive towards mattresses that are larger than the minimum allowable size. Some public comments make the same point. CPSC agrees with ASTM members and public comments on this point.[55] The proposal in the NPR assumed that every mattress would have the 1-inch maximum allowable gap between the crib and the crib mattress, regardless of size. This assumption is overly restrictive towards mattresses that were designed to fill the space between the crib and crib mattress. The final rule improves the test method to address this point, by incorporating projected crib dimensions that consider the maximum allowable crib interior dimensions of 53 inches x 28⅝ inches to be an appropriate position, because a crib with the maximum interior dimensions will be the worst-case product to consider hazardous corner gaps. Accordingly, the final rule incorporates changes to the measurement method, such that the corner gap is measured from the projected corner of a crib, as described in section VIII of this preamble.

Additionally, ASTM members commented that the mattress measurement method described in section 6.2 was established with concerns about foam compression in mind. As mentioned in the appendix of ASTM F2933–21, the rationale for using a dynamic measuring box was ''to provide a more repeatable measurement that would take away the variability caused by soft materials.'' The test method proposed in the NPR would have repeated these measurements with the fitted sheet on the mattress, essentially compressing the mattress twice when taking dimension measurements. In response to these comments, the final rule removes the requirement that the mattress with the fitted sheet must meet the same dimension requirements as the mattress without the fitted sheet. Instead, the final rule requires the corner gap measurement to be taken separately from the dimension measurements.

[55] Staff notes that of the 11 mattresses tested for the NPR, all of which were larger than the minimum size, none failed the draft proposed test method.

b. After-Market Mattresses for Play Yards and Non-Rectangular, Non-Full-Size Cribs

ASTM F2933–21 also includes provisions to address fit issues with after-market mattresses for play yards and non-rectangular, non-full-size cribs. These provisions require that after-market mattresses meet the same requirements as OEM play yard and non-full-size crib mattresses, as specified in ASTM F406. The dimensional requirements for after-market non-full-size crib mattresses in section 5.9 of ASTM F2933–21 currently only apply to non-rectangular, non-full-size crib mattresses, and the dimensional requirements in section 5.7 of the standard only apply to OEM non-full-size crib mattresses. This is consistent with staff's assessment of ASTM F2933–19 in the NPR. Although labeling requirements in section 7 of the standard apply to all non-full-size crib mattresses, regardless of shape, or whether they are after-market or OEM, ASTM F2933–21 contains no dimensional requirements that apply to after-market, rectangular, non-full-size crib mattresses. To address this gap in the standard, the final rule modifies section 5.7 of ASTM F2933, as proposed, to apply the dimensional requirements to all non-full-size crib mattresses, regardless of shape or whether they are provided with the crib or sold after-market. The Commission is also finalizing the modification to section 5.9 of ASTM F2933, as proposed, to remove non-full-size cribs from that section and to clarify requirements for after-market play yard mattresses.

7. Hazard Pattern—Found Prone

Fifty-four percent (75 out of 139) of fatal and 1 percent (3 out of 355) of nonfatal incidents, including nine fatal incidents identified since the NPR, are associated with infants found in a prone position on a crib mattress, without any mention of the face being in contact with the mattress or crib sheet, and no mention of the face being obstructed by other crib bedding or other items in the sleep environment. ASTM F2933–21 does not address this hazard pattern with a performance test; however, it does address it with warning labels. The Human Factors assessment in Tab D of Staff's Final Rule Briefing Package provides warning label recommendations to strengthen the standard to address this hazard pattern. The Commission will finalize the rule, as proposed, with revised warning labels to address this hazard.

8. Hazard Pattern—Mattress Falling Apart

Five percent (18 out of 355) of nonfatal incidents are associated with mattresses falling apart. Staff did not identify any new incidents since the NPR. In most of these reports, the seams of the mattresses unraveled, causing a strangulation hazard because the thread or cord used for stitching the mattress was exposed. This failure also resulted in a choking or ingestion hazard because the inner filling came out of the mattress in small pieces and into the sleep environment of the crib. ASTM F2933–21 adequately addresses this hazard with a mattress seam-stitching requirement and small parts prohibition.

9. Hazard Pattern—Softness

Fifteen percent (55 out of 355) of nonfatal incidents, including 19 incidents identified since the NPR, are associated with mattress softness. Mattress softness hazards include depressions or indentations found in the crib mattress that could increase the risk of asphyxia. Twelve of these 55 incidents relate to bending, buckling, or mattress compression occurring when a crib sheet was placed on a mattress, shrinking the mattress, and creating an entrapment hazard. ASTM F2933–21 does not address firmness or softness hazards; nor does it address mattress buckling. However, other international standards, Australian/New Zealand Standard (AS/NZS) 8811.1:2013, and EN 16890:2017, *Children's Furniture—Mattresses for Cots and Cribs—Safety Requirements and Test Methods,* both address mattress firmness.

The NPR proposed a firmness test method based on the AS/NZS 8811.1:2013 test method for firmness. After the Commission issued the NPR, CPSC staff continued to engage with ASTM to address the hazard pattern created by soft crib mattresses in the ASTM standard. ASTM members discussed this firmness test at ASTM crib mattress subcommittee and task group meetings on November 10, 2020, December 3, 2020, and February 16, 2021. At these meetings, ASTM members agreed that a firmness test was needed in the standard, but debated whether the AS/NZS 8811.1 protocol or the EN 16890 protocol would be more appropriate. Some members agreed with CPSC staff's assessment that the AS/NZS 8811.1 protocol was more appropriate, and found that test results using the EN 16890 protocol could be difficult to interpret. Other ASTM members disagreed, stating that the AS/NZS 8811.1 protocol did not produce

consistent results and the EN 16890 protocol was more appropriate. ASTM members did not provide supporting evidence for this conclusion. ASTM members agreed to test and compare results using both protocols after the February 16, 2021 meeting.

At a June 10, 2021 subcommittee meeting, several ASTM members reported that they had conducted testing using one or both of the firmness protocols, and they repeated the assertion that the EN 16890 protocol should be favored. One member stated that the AS/NZS 8811.1 protocol results could be inconsistent if the test was not conducted on a flat surface.[56] ASTM members provided no detailed test results, and none were discussed at this meeting.

For the NPR, staff compared the AS/NZS 8811.1:2013 and EN 16890, section 8.2.3 test protocols for firmness, and they found that the AS/NZS 8811.1:2013 test method was more stringent.[57] CPSC staff came to this conclusion after comparing test results obtained using each protocol on 11 full-size crib mattresses. Only one mattress failed the firmness tests outlined in each standard. The mattress was a two-stage mattress, indicating it had a firmer side intended for infants and a softer side intended for toddlers. Both sides of the mattress failed the AS/NZS protocol. The mattress failed the EN 16890 protocol only on the ''toddler'' side, which is intentionally made softer.

Additionally, for the NPR staff found that the AS/NZS 8811.1:2013 test protocol is more repeatable and is easier to discern when a mattress does not meet the performance requirements, as compared to the EN16980 method. Some ASTM members and public comments stated that the AS/NZS 8811.1:2013 test protocol does not provide consistent test results, but they have not provided evidence to support this conclusion. Staff's testing has not indicated any such issues. Some ASTM members agreed with staff's assessment of AS/NZS 8811.1:2013, and some public comments, reviewed in section VII of this preamble, supported the use of AS/NZS 8811.1:2013 to determine whether a mattress was too soft. Accordingly, to address mattresses that are too soft, for the draft final rule, the Commission will finalize the rule, as proposed, by adding a test for mattress firmness for all crib mattresses within the scope of the standard, based on sections 6 and 8 in the AS/NZS 8811.1 mattress firmness test.

10. Hazard Pattern—Multiple Contributing Factors

Multiple contributing factors accounted for 11 percent (15 out of 139) of fatal and 5 percent (19 out of 355) nonfatal incidents, including two nonfatal incidents identified since the NPR. Examples of contributing factors are: Entrapment between the mattress and crib bumper pads, limb entrapment between the mattress and a crib rail, crib occupant usage of a swaddle, sharing of the crib with another infant, and congenital or recent health conditions of infants. ASTM F2933–21 adequately addresses these hazards in the general requirements sections. ASTM F2933–21 also addresses these hazards with safety information requirements, but these requirements are inadequate. Tab D of Staff's Final Rule Briefing Package, and section VI.B of this preamble, outline the human factors assessment of the ASTM F2933–21 requirements for safety information and the modifications required in this final rule. As proposed in the NPR, the Commission is finalizing the rule with revised safety information to address this hazard.

11. Hazard Pattern—Other

Two percent (6 out of 355) of nonfatal incidents involved miscellaneous other issues associated with a crib mattress. Staff did not identify any new incidents since the NPR. Reports include: A blade found in a crib mattress; an infant's arm ''tangled in a crib mattress''; an infant ''slipped on a crib mattress,'' causing a slat entrapment; an infant's arm ''stuck on a crib mattress''; a crib mattress is too thick; a crib mattress had a loose plastic bag for a cover; and a concern about crib mattresses not having proper warning labels to direct caregivers to place infants on their backs when putting them down in a crib. Foreign objects are generally not addressable in product standards. For three of these incidents, staff could not determine the exact cause of the incident, or whether ASTM F2933–21 was the appropriate standard to address the hazard. ASTM F2933–21 warning label requirements include a statement that says to place infants on their backs to sleep, and to ''only use sheets and mattress pads designed specifically for crib mattresses.''

B. Adequacy of Marking, Labeling, and Instructions [58]

Universally, labeling experts view warning about a hazard as less effective at addressing hazards than designing the hazard out of a product, or guarding the consumer from the hazard. The use of warnings is lower in the hazard-control hierarchy than design-based approaches, because the effectiveness of the warning depends on persuading consumers to alter their behavior in some way to avoid hazards, rather than eliminating hazards or inhibiting exposure to hazards. Therefore, when a standard relies on warnings to address a hazard, warning statements must be as strong as possible; *i.e.,* the warnings must be noticeable, understandable, and motivating. The primary U.S. voluntary consensus standard for product safety signs and labels, ANSI Z535.4, *American National Standard for Product Safety Signs and Labels,* recommends that on-product warnings include content that addresses the following three elements: [59]

- A description of the hazard;
- information about the consequences of exposure to the hazard; and
- instructions regarding appropriate hazard-avoidance behaviors.

Section 7 of ASTM F2933 specifies requirements for marking and labeling for full-size crib mattresses, non-full-size crib mattresses, and after-market mattresses for play yards and non-full-size cribs. In the NPR, the Commission stated that, based on CPSC staff's examination of literature, incident data, and consumer feedback, the crib mattress warnings specified in ASTM F2933–19 did not adequately address these warning elements regarding the identified hazards. Although the standard contained warnings pertaining to infant positioning, soft bedding, and gap entrapment, the wording and formatting of the warning message needed to be improved to communicate the hazards effectively.[60] The Commission's NPR recommended the following changes to the safety information requirements specified in ASTM F2933–19:

- Clarifying the definition of ''conspicuous'' in section 3, *Terminology;*

[56] Stitching patterns often contribute to uneven surfaces on crib mattresses.

[57] *See* NPR at 85 FR 67913–14 and 67918 for a discussion of the AS/NZ 8811.1:2013 test for mattress firmness.

[58] The NPR contained an explanation of the proposed modifications to the warnings associated with crib mattresses. 85 FR 67918–21. Staff's NPR Briefing Package at Tab F contains additional details on the basis for the Commission's proposed modifications to the marking, labeling, and instructional literature requirements for crib mattresses. Staff's Final Rule Briefing Package at Tab D explains the clarifications made in the final rule, compared to the NPR.

[59] All three elements may not be necessary in some cases, such as if certain information is open and obvious or can be readily inferred by consumers. However, people often overestimate the obviousness of such information to consumers.

[60] The NPR discusses safety information inadequacies at 85 FR 67918–21.

• Improving marking and labeling requirements in section 7, *Marking and Labeling;* and

• Adding instructional literature requirements in a new section 8, *Instructional Literature.*

The NPR explained that CPSC staff considered incident data,[61] results from survey [62] and focus group research,[63] relevant literature,[64] requirements in ANZI Z535.4,[65] recommendations from the ASTM Ad Hoc Language Task Group,[66] and suggestions from other stakeholders participating in the ASTM F15.66 subcommittee on crib mattresses and the greater ASTM F15 committee on consumer products.[67] Since the NPR published, CPSC received comments from the public pertaining to the NPR's safety information requirements. Section VII of this preamble contains comment summaries and the Commission's responses. Two of the comments requested that staff continue collaborative efforts with ASTM to address weaknesses in safety information requirements for crib mattresses. Below we describe warnings-related ASTM activities and changes in the final rule intended to further improve the safety of crib mattresses. Appendix A to Tab D of Staff's Final Rule Briefing Package contains a side-by-side comparison of the NPR, ASTM's latest recommendations, and the final rule.

1. ASTM Subcommittee Activities and ASTM F2933

After the NPR published, staff continued to work with ASTM F15.66 to address deficiencies in the safety information requirements in ASTM F2933. ASTM F15 balloted revised sections of the standard, closing on April 12, 2021. The ballot, F15 (21–02), addressed safety information requirements in item 13, *Revision of F2933–2019 Consumer Safety Specification for Crib Mattresses WK72077.* The ballot item received three negative votes, two of which were administrative. One negative vote, submitted by CPSC staff on April 6, 2021, included a letter identifying deviations from the NPR.[68] On June 9, 2021, ASTM F15.66 reviewed staff's letter, and voted on whether the letter was persuasive. Several attendees shared rationales for some of the substantive deviations from the NPR, which we discuss below.

ASTM members stated that the NPR includes SIDS (Sudden Infant Death Syndrome) in the hazard identifier (*i.e.,* ''SIDS AND SUFFOCATION HAZARDS''), which in the balloted version reads: ''SUFFOCATION HAZARD.'' In addition to requesting rationale for this incongruity, staff asked ASTM F15.66 to discuss a public comment on the NPR, which recommends making the hazard identifier active; *i.e.,* ''Help Prevent SIDS and Suffocation.'' Several ASTM members argued that the hazard identifier should remain as balloted to keep the focus on the suffocation hazard, which they believed to be the most important message. ASTM members also claimed that SIDS is already well known, and therefore, it does not need to be included in the hazard identifier. As discussed in Staff's NPR Briefing Package and staff's ballot letter, the Commission agrees with staff that it is important to include ''SIDS'' in the hazard identifier for numerous reasons, including the following: (1) SIDS, in addition to suffocation, is cited frequently in reports of fatal incidents; (2) several statements in the warning label address the SIDS hazard; and (3) SIDS, by definition, is a poorly understood hazard, and consumers are more likely to read the warning message if they know it includes actions by which to limit the risk of SIDS.[69]

The NPR prioritized the prone sleep message, ''ALWAYS place baby on back to sleep to reduce the risks of SIDS and suffocation,'' directly after the hazard identifier. In ASTM's balloted version, this message appears much lower in the warning label. Several ASTM members argued that addressing the suffocation hazard involving soft bedding needs to be the primary thrust of the warnings, and that the prone sleep message should be lower in the warning. The Commission's prioritization of the prone sleep message, which is supported by a public comment, is important for communicating to consumers the most common hazardous use pattern that staff observed in fatal crib mattress incidents. As detailed in Tab B of Staff's Final Rule Briefing Package, and Tab A of Staff's NPR Briefing Package, the majority of the deaths involved prone positioning, often with no other known contributing factors. The prone sleep message needs to be communicated foremost, and the likelihood that consumers will see this critical message will be improved by placing it at the top of the warning label. Prioritizing the prone sleep message will not make it less likely that consumers will read and follow the messages pertaining to suffocation from soft bedding, which are emphasized in the label, because the prone sleep message is followed by a suffocation-specific heading (*i.e.,* ''Babies have suffocated'') and several statements, including bulleted points, about soft bedding. The arrangement of warnings in the final rule increases the likelihood that consumers will be made aware of the SIDS and suffocation hazards in the event that they read only the first half of the label.

The NPR included the following additional requirements for after-market mattresses for rigid-sided, rectangular, non-full-size cribs: (1) All warnings added by the original manufacturer in addition to those required by this standard; (2) assembly/attachment instructions that were provided on the original mattress; and (3) the brand(s) and model(s) number(s) of the product(s) in which the mattress is intended to be used. In ASTM's balloted version, these requirements apply only to mesh/fabric-sided products and rigid-sided non-rectangular products. Several ASTM members argued that these warnings are not suitable for after-

[61] The ESHF memorandum in CPSC staff's NPR briefing package details staff's findings regarding the prevalence in incident data of infant prone positioning, soft bedding, and mattress size/corner gaps.

[62] The 2014 ''Durable Nursery Products Exposure Survey (DNPES): Final Summary Report,'' by Westat, details the findings of a survey conducted in 2013, which collected information about durable infant and toddler products.

[63] The 2019 ''Consumer Product Safety Commission (CPSC): Caregiver Perceptions and Reactions to Safety Messaging Final Report'' (Safety Messaging Report) by Fors Marsh Group, summarizes focus group research and a literature review pertaining to safe sleep practices in various products, including cribs and play yards.

[64] For example, Joyner et al. (2009) as cited in the Safety Messaging Report, posited that caregivers are likely to trust implicitly the safety of products under the misconception that if a product is sold to the public, then it is likely safe to use. Staff finds this common misconception particularly likely with regards to infant products; the greater vulnerability of infants to product hazards is likely to support the expectation of caregivers that infant products are designed to be safe.

[65] ANSI Z535.4, *American National Standard for Product Safety Signs and Labels,* is the primary U.S. voluntary consensus standard for product safety signs and labels.

[66] ASTM juvenile products standards have begun adopting ''Ad Hoc'' recommendations since 2016, to increase the consistency of on-product warning design among juvenile products, and to address numerous warning format issues related to capturing consumer attention, improving readability, and increasing hazard perception and avoidance behavior.

[67] Since May 2018, CPSC staff has been participating in ASTM F15.66 to address the identified hazards. Subcommittee members include manufacturers, safety and health advocacy groups, and other critical stakeholders. Changes to ASTM F2933 proposed by ASTM F15.66 have been balloted by ASTM F15 (see discussion of ASTM Ballot F15 (21–02), below).

[68] *See* Appendix B to Staff's Final Rule Briefing Package.

[69] Detailed in the NPR package, SIDS is a subcategory of SUID that refers to infant deaths that cannot be explained after a thorough case investigation.

market mattresses for rigid-sided, rectangular products, claiming that there are standard sizes for rigid-sided rectangular products. CPSC staff advises that this claim is not factual; excluding full-size cribs, there are no official standardized interior dimensions of rigid-sided, rectangular non-full-size cribs. ASTM F406–19, the applicable mandatory standard, requires only that the interior length dimension is either greater than 55 in. (139.7 cm) or smaller than 49–4 in. (126.3 cm), and/or the interior width dimension is greater than 30 8 in. (77.7 cm) or smaller than 25–8 in. (64.3 cm). Considering that this subsection of the rule excludes full-size cribs, the final rule includes the NPR-proposed language, thereby ensuring that consumers see the additional information for after-market mattresses for rigid-sided, rectangular, non-full-size cribs.

The NPR included requirements for instructional literature. These requirements are consistent with recommendations from the ASTM Ad Hoc Language Task Group. Several ASTM members argued that instructions are unnecessary for crib mattresses, alleging use of the products is intuitive and that relevant information is provided in the on-product labels. In addition to aligning with Ad Hoc recommendations, given the significance of the hazards, it is important to incorporate another medium, *i.e.,* instructional literature, by which to communicate the SIDS and suffocation hazards to consumers. The NPR demonstrated through incident data and research involving surveys and focus groups that consumers continue to use crib mattresses in ways contrary to the proposed safety information. Given the inherent limitations of safety information, which depends on persuading consumers to behave differently and perhaps inconveniently (such as repositioning a sleeping infant), multiple mediums are critical to communicate hazard-avoidance behaviors to consumers to motivate consumer actions.

In a June 9, 2021 ASTM meeting, staff raised additional concerns, including the following: (1) The word ''product'' was used in the ASTM balloted item to refer to both crib mattresses and structures (cribs, non-full-size cribs, and play yards); and (2) the ASTM balloted item used ''should'' instead of ''shall'' in reference to required labeling specifying maximum gaps between the mattress and product sides, and that the reference was made in a ''Note,'' which, by definition, is not mandatory.[70] The ASTM subcommittee agreed that these additional concerns were valid, but determined that the ballot should not be delayed, and that further improvements would be considered in the future. Subcommittee voting members voted on whether CPSC staff's negative was non-persuasive, and the motion passed with 11 affirmatives, one negative, and six abstentions. The full F15 committee upheld the subcommittee's non-persuasive finding on August 2, 2021 (ballot F15 (21–05), item 8). Therefore, a further revision of ASTM F2933–21 was approved on September 1, 2021, and CPSC expects the revision will be published around the end of September 2021. However, this future revision will remain inconsistent with the final rule, and for the reasons detailed in this preamble and Tab D of Staff's Final Rule Briefing Package, the Commission will not include ASTM's revision in the final rule.

ASTM included the following additional deviations in the ballot (F15 (21–02), item 13), which were not sufficiently discussed in the June 9, 2021 meeting, and the Commission did not receive direct comments on the NPR pertaining to these deviations. However, consistent with comments on the NPR, which requested that CPSC consider ongoing ASTM activities, we assessed whether these deviations added to the safety of crib mattresses. One such deviation was placement of the following warning message lower in the label than in the NPR: ''DO NOT cover the faces or heads of babies with a blanket or over-bundle them. Overheating can increase the risk of SIDS.'' Staff advises that this important warning should not appear towards the bottom of the label, located below a detailed explanation of how to identify hazardous gaps. The label already includes a warning pertaining to gaps above this warning about overheating, and staff reiterates the importance of addressing the hazardous uses early on in the label, as text lower in the label is less likely to be read. Additionally, the warning label layout proposed in the NPR positions the gap measurement message directly above the related interior dimensions message for cribs, and closer to other required statements pertaining to product size.

ASTM's balloted item also deviated from the NPR regarding the packaging requirements. The NPR-proposed packaging requirements incorporated recommendations from the ASTM Ad Hoc Language Task Group. The ASTM-balloted packaging requirements expand on these Ad Hoc recommendations, including product-specific clarifications and incorporating formatting requirements from section 7.4 of ASTM F2933–21. After further consideration, CPSC agrees that some of these changes may further improve the safety of crib mattresses, while other changes are merely editorial and do not add to the safety of crib mattresses. Accordingly, the final rule continues to align with the ASTM Ad Hoc committee's recommendations for packaging requirements.

2. Final Rule Warnings Clarifications

As requested in comments on the NPR, staff continued efforts with ASTM to further improve the safety information requirements for crib mattresses. Based on these communications and ASTM F15's balloted changes to safety information to be incorporated into ASTM F2933–21, the final rule includes modifications to safety information, to further reduce the risks of death and serious injury associated with crib mattresses. Appendix A to Tab D of Staff's Final Rule Briefing Package contains a redline of all modifications in the final rule.

- In section 3.1.2, changed ''conspicuous, adj—visible while the mattress is being placed in its intended use position,'' to ''conspicuous, adj—visible when the mattress is being handled by a consumer placing the mattress in its intended use position in a product.'' This change aligns with the latest consensus ballot by ASTM F15, and clarifies the intended meaning of ''conspicuous'' in the NPR-proposed language, that the warning should be conspicuous to the consumer.
- In section 7.4.6.2, changed ''The text in each column needs to be arranged in list or outline format, with precautionary (hazard avoidance) statements preceded by bullet points,'' to ''The text in each column should be arranged in list or outline format, with precautionary (hazard avoidance) statements preceded by bullet points.'' This change, from the mandatory language of ''needs to'' to the recommended language of ''should,'' aligns with the latest recommendations from Ad Hoc and the consensus ballot by ASTM F15. This change recognizes the importance of providing manufacturers with flexibility in arranging the bulleted hazard avoidance statements based on mattress-specific requirements, where appropriate.
- In section 7.5, changed ''The blank in the mattress fit statement beginning with 'If a gap is larger than,' needs to be

[70] *See* Ballot F15 (21–02), item 13, note 7 in Appendix A to Tab D of Staff's Final Rule Briefing Package.

filled with '1⅜ in. (3.5 cm)' for full-size crib mattresses and '1 in. (2.5 cm)' for all other mattresses,'' to ''The blank in the mattress fit statement beginning with 'If a gap is larger than,' needs to be filled with '1½ in. (3.8 cm)' for full-size crib mattresses and '1 in. (2.5 cm)' for all other mattresses.'' This change for full-size crib mattresses from 1⅜ inches to 1½ inches aligns with the latest consensus ballot by ASTM F15. This change results in a minor conflict between the warning message and the maximum gap afforded by the performance requirements (*i.e.,* a conflict of ⅛ in.); however, CPSC agrees with ASTM F15.66, which determined by consensus the following: The difference of ⅛ inch is unlikely to reduce the safety of full-size crib mattresses, the conflict is unlikely to confuse consumers (they are unlikely to be familiar with the requirements in the standard), and the new measurement (1½ in.) is more tangible for consumers to estimate, thereby, increasing the likelihood of consumers attempting to measure, and accurately measuring, gaps between the full-size crib mattress and side walls of the full-size crib.

- In section 7.5.3, changed ''Manufacturers are permitted to include additional warnings between the warnings specified in 7.5 and 7.6 if desired,'' to ''Additional manufacturer warnings are permitted between the warnings specified in 7.5 and 7.6, if desired.'' This editorial change clarifies further the allowance in the rule, and it is consistent with the latest consensus ballot by ASTM F15.
- Section 7.8 includes several changes to the requirements for retail packaging, as specified in Appendix A to Tab D of Staff's Final Rule Briefing Package. These changes take into consideration the latest consensus ballot by ASTM F15, and further improve the safety of crib mattresses by: (1) Incorporating formatting requirements from section 7.4, and (2) clarifying the warnings and statements required for specific mattress types.
- Renumber Figures 7–10 to Figures 8–11. This shift in numbering accounts for an additional figure added to ASTM F2933–21, Section 6, as part of the final rule, as discussed in Tab C of Staff's Final Rule Briefing Package.
- For Figure 10, now renumbered as Figure 11, changed the caption from ''Example of Warning Label for After-Market Mattress for Rigid-Sided Rectangular Products. Items italicized in brackets are to be added as appropriate. The blanks are to be filled in as appropriate,'' to ''Example of Warning Label for After-Market Mattress for Rigid-Sided, Rectangular, Non-Full-Size Cribs. Items italicized in brackets are to be added as appropriate.'' This change provides an important clarification that the example is not for full-size crib mattresses; full-size crib mattresses have a different warning label than these products.

To illustrate the changes to the warning labels, Figure 3 below shows a comparison of warning label examples from the NPR-proposed label, the latest consensus ballot label to be incorporated into ASTM F2933–21, and final rule warning labels for full-size crib mattresses.[71]

NPR Proposed
Full-Size Crib Mattress Warning

⚠ WARNING

SIDS AND SUFFOCATION HAZARDS

ALWAYS place baby on back to sleep to reduce the risks of SIDS and suffocation.

Babies have suffocated:

- on pillows, comforters, and extra padding
- in gaps between a wrong-size mattress, or extra padding, and side walls of product.

NEVER add soft bedding, padding, or an extra mattress.

USE ONLY one mattress at a time.

DO NOT cover the faces or heads of babies with a blanket or over-bundle them. Overheating can increase the risk of SIDS.

ALWAYS check mattress fit **every time you change the sheets,** by pushing mattress tight to one corner. Look for any gaps between the mattress and the side walls. If a gap is larger than 1⅜ in. (3.5 cm), the mattress does not fit – **do not** use it.

DO NOT use this mattress in a crib having interior dimensions that exceed 28⅝ by 53 in. (73 by 135 cm) as measured from the innermost surfaces of the crib.

USE ONLY sheets and mattress pads designed specifically for crib mattresses.

DO NOT remove these important safety warnings.

ASTM Ballot F15 (21-02) #13
Full-Size Crib Mattress Warning

⚠ WARNING

SUFFOCATION HAZARD

Babies have suffocated:

- on pillows, comforters, and extra padding
- in gaps between a wrong-sized mattress, or extra padding, and side walls of product.

NEVER add soft bedding, padding, or an extra mattress.

ONLY USE one mattress at a time.

ALWAYS check mattress fit **every time you change the sheets** by pushing mattress tight to one corner. Look for any gaps between the mattress and the side walls. If a gap is larger than 1.5 in (3.8 cm), do not use the mattress.

ALWAYS place baby on back to sleep to reduce the risks of SIDS and suffocation.

DO NOT cover the faces or heads of babies with a blanket or over bundle them. Overheating can increase the risk of SIDS.

DO NOT use this mattress in a crib having interior dimensions that exceed 28 5⁄8 by 53 in. (73 by 135 cm) as measured from the innermost surfaces of the crib.

ONLY USE sheets and mattress pads designed specifically for crib mattresses.

DO NOT remove these important safety instructions.

Draft Final Rule
Full-Size Crib Mattress Warning

⚠ WARNING

SIDS AND SUFFOCATION HAZARDS

ALWAYS place baby on back to sleep to reduce the risks of SIDS and suffocation.

Babies have suffocated:

- on pillows, comforters, and extra padding
- in gaps between a wrong-size mattress, or extra padding, and side walls of product.

NEVER add soft bedding, padding, or an extra mattress.

USE ONLY one mattress at a time.

DO NOT cover the faces or heads of babies with a blanket or over-bundle them. Overheating can increase the risk of SIDS.

ALWAYS check mattress fit **every time you change the sheets,** by pushing mattress tight to one corner. Look for any gaps between the mattress and the side walls. If a gap is larger than 1 ½ in. (3.8 cm), the mattress does not fit – **do not** use it.

DO NOT use this mattress in a crib having interior dimensions that exceed 28⅝ by 53 in. (73 by 135 cm) as measured from the innermost surfaces of the crib.

USE ONLY sheets and mattress pads designed specifically for crib mattresses.

DO NOT remove these important safety warnings.

Figure 3. Examples of NPR-proposed (left), ASTM-balloted (middle), and draft final rule (right) warning labels for full-size crib mattresses. These labels are not shown in actual size.

VII. Response to Comments

The Commission received 13 comments on the NPR before the comment period closed on January 11, 2021, and two late-filed comments, in July and September 2021. You can access comments by searching for docket number CPSC–2020–0023 at *http://www.regulations.gov.* The comments fell into several broad categories: (1) Testing requirements and modifications; (2) after-market mattress fit for play yards; (3) improving communication to caregivers; and (4) procedure. Below we summarize and respond to the comments by topic.

[71] *See* Appendix A to Tab D of Staff's Final Rule Briefing Package, Figures 10 and 11, for examples of the draft final rule warnings for non-full-size crib mattresses and after-market mattresses for play yards and non-full-size cribs.

A. Testing Requirements and Modifications

Comment 1: Commenters generally supported requirements for cyclic testing of full-size coil spring mattresses, but they encouraged continued work with ASTM to address outstanding issues.

Response 1: Requirements in the final rule for cyclic testing of full-size coil spring mattresses are based on staff's work with the ASTM cyclic testing task group before the NPR. Since the NPR published, staff continued to work with the task group to develop this test. The task group last met on December 9, 2020. Public comments specifically refer to ASTM work to further define requirements for support of the plywood/oriented strand board (OSB) mattress support board, and to further clarify how the test method can allow for dual-sided mattresses. Staff advises that they generally agree with these comments. However, the task group's work has not been balloted, and any updates to the test procedure since the December 2020 meeting have not been made available to staff for review. Therefore, for the final rule, the Commission is updating the cyclic test method by clarifying that the test method should be performed on each side of the mattress, using different mattresses, to address how the test should proceed with dual-sided mattresses. The Commission does not have enough information to proceed with any changes to the mattress support board. Should ASTM propose any updates to the test method in the future, the update process under Public Law 112–28 provides a method for the Commission to consider whether a revised test method improves the safety of crib mattresses.

Comment 2: The CPSC received several comments related to the proposed corner gap test using a twice-washed fitted sheet, including: (1) That there should be a shrinkage performance requirement for a sheet, in lieu of testing mattresses with a shrunken sheet; and (2) that each mattress corner should be subjected to a certain, unspecified force or pressure before measuring the subsequent gap, instead of using a shrunken sheet. One commenter suggested that issues with sheets not fitting appropriately are better addressed by the ASTM infant bedding subcommittee. A commenter stated that as currently written, the test methodology may result in inconsistent, variable test results across testing labs and settings, because sheets can vary in quality and sizing. The same commenter also said the testing methodology may penalize full-size crib mattresses designed with greater-than-nominal dimensions.

Response 2: Staff advises that issues with sheets shrinking or not fitting full-size-crib mattresses are appropriate for the infant bedding subcommittee. The ASTM infant bedding subcommittee has formed a task group, which held its initial meeting on March 22, 2021. CPSC staff is a member of the task group and participated in the initial meeting. CPSC staff will continue working with the ASTM infant bedding subcommittee to develop appropriate performance requirements for fitted sheets. Once that work is complete, staff can work with the ASTM crib mattress subcommittee to refer to new requirements for sheets, if appropriate. Staff's work with the ASTM infant bedding subcommittee will also help resolve concerns about inconsistent test results due to variability in sheet quality and sizing. The Commission encourages test laboratories to identify cotton sheets that are the appropriate size for the mattress to be tested.

Addressing the fact that sheets shrink, however, does not address the issue of mattresses that do not hold their shape when sheets are applied. Therefore, the final rule contains a test for potentially hazardous gaps created when sheets are placed on a crib mattress. Staff advises that the ASTM subcommittee created a task group to work on creating a test that uses an appropriate force to apply to crib mattress corners, to simulate sheets, which could create a more repeatable test and more consistent results. However, CPSC received no comments or test data to support a test protocol, or an appropriate force. As noted in the NPR, foam mattresses and innerspring mattresses have different compressive behavior when a sheet is placed on them, resulting in inconsistent forces to replicate sheet behavior. Staff will continue to work with the ASTM subcommittee and task group, and if ASTM should publish a voluntary standard with a revised compression test, CPSC can evaluate the updated voluntary standard under the revision process pursuant to Public Law No. 112–28.

For the final rule, in response to comments, the Commission will revise the method of measuring for the compression test. Staff advises that the methodology proposed in the NPR may be overly restrictive for full-size crib mattresses designed to be greater-than-nominal dimensions, because the test method assumed that every mattress would have the 1-inch maximum allowable gap between the crib and the crib mattress, regardless of size. Commenters state that this assumption is overly restrictive for mattresses that were designed to fill the space between the crib and crib mattress. Accordingly, to address this comment, the final rule modifies the measurement method in the test procedure, such that the corner gap is measured from a projected crib corner.

Comment 3: Several commenters expressed opinions regarding the mattress firmness test proposed in the NPR. Overall, it appeared that industry prefers the mattress firmness test in the ISO 23767 standard, *Children's furniture—Mattresses for cots and cribs—Safety requirements and test methods,* over the proposed mattress firmness test based on the AS/NZS 8811.1:2013 standard, *Methods of testing infant products—Method 1: Sleep Surfaces—Test.* Consumer groups expressed support for the test based on AS/NZS 8811.1:2013. One consumer group submitted an undergraduate engineering report describing a potential new test fixture for consideration, but the submission did not include additional information, such as test protocols and performance criteria.

Response 3: The Commission agrees with commenters who support a firmness test that would address the suffocation hazard associated with excessively soft mattresses. Although several commenters expressed support for specific tests, none of the commenters provided testing data to support the use of one test protocol over another. In the NPR, CPSC compared the AS/NZS 8811.1:2013 and the ISO 23767 test protocols [72] for measuring mattress firmness, and found that the AS/NZS 8811.1:2013 test method was more stringent because it resulted in failures on more test surfaces. Additionally, although the Commission appreciates the work to develop a test fixture that can be used to compare mattress firmness, the undergraduate engineering report offers no performance criteria by which to judge the results.

Accordingly, based on the available data, the Commission will finalize the crib mattress rule, as proposed, by requiring use of a firmness test based on the requirements in AS/NZS 8811.1:2013 test for mattress firmness. CPSC staff continues to work with the ASTM subcommittee to investigate firmness requirements, as discussed in section VI.A of this preamble and Tab C of the Staff Final Rule Briefing

[72] The ISO 23767 test protocol is the same as the EN 16890:2017, *Children's Furniture—Mattresses for Cots and Cribs—Safety Requirements and Test Methods,* section 8.2.3 firmness test protocol.

Package. If ASTM updates the voluntary standard to include a different mattress firmness test, and the revision is based on supporting data, ASTM can provide to the Commission the updated standard and supporting data for evaluation through the update process, pursuant to Public Law 112–28.

B. After-Market Mattress Fit for Play Yards

Comment 4: One commenter stated that having standard-sized play yards and mattresses could help to address mattress fit issues, similar to the method employed by full-size cribs and full-size crib mattresses.

Response 4: The play yard and non-full-size cribs voluntary standard (ASTM F406–19, incorporated by reference into 16 CFR parts 1220 and 1221) currently does not contain provisions requiring the products to be of a standard size. We further note that the commenter did not provide a proposal for a specific size or range of sizes that would be necessary for such a requirement, and the NPR did not discuss standardizing sizes for play yard mattresses; nor did it solicit comment on the issue. Therefore, changes to play yard mattresses in 16 CFR part 1220 are outside the scope of this specific rulemaking on crib mattresses. The commenter should pursue this idea with the ASTM F15.18 subcommittee on play yards.

Comment 5: A commenter requested that the Commission set a minimum thickness for play yard mattresses to reduce the likelihood consumers would find a mattress too thin and add hazardous padding. The same commenter requested that the Commission delay finalizing the rule until a task group organized by the ASTM play yard subcommittee, the play yard mattress fit and thickness task group, completes their work.

Response 5: Regarding the request that the Commission set a minimum thickness for play yard mattresses, we note that CPSC staff expressed similar concerns with consumer perception of mattress thickness/comfort in the briefing package on Petition CP 15–2, stating, ''Because incident data demonstrate that consumers perceive play yard mattresses to be uncomfortable, and then place additional soft bedding in infant sleep environments, CPSC staff does not recommend banning supplemental mattresses.'' However, based on staff's advice, we believe that setting a minimum mattress thickness would not address the resilience of a mattress, which is not based on thickness alone, but also on the density of underlaying foam. For example, staff advises that they are aware of bassinet mattresses that meet the thickness limit, but are dense enough not to ''bottom out'' on the hard backer-board, which supports that a denser foam pad could also address consumer complaints.

Regarding the work of the play yard fit and thickness task group, this work is ongoing and has neither reached consensus in the task group, nor been balloted. Staff has also voiced concern that this task group is focused on identifying the gap size between the mattress and the flexible play yard side while the play yard side is in a resting position, while staff believes the focus should be on a test that accounts for the flexible nature of play yard sides to create a three-dimensional pocket from the existing gap. Staff remains engaged in efforts to address mattress thickness.

Work on the play yard standard is outside the scope of this rulemaking, and therefore, that work should not delay the current rulemaking for crib mattresses. If, in the future, F406 is updated to address the work of the fit and thickness task group, then ASTM can notify the Commission under the provision in Public Law 112–28, and the Commission will evaluate the potential effect on the safety of play yard mattresses.

Comment 6: Some commenters who manufacture crib mattresses objected to allowing after-market mattresses for play yards because all play yards are sold with a mattress designed for use with the play yard. One manufacturer questioned the safety and necessity of after-market mattresses.

Response 6: In 2015, the Commission docketed a petition to ban supplemental mattresses for play yards. In response to that petition, the Commission directed staff to address hazards associated with supplemental play yard mattresses, as well as crib mattresses, through rulemaking under section 104. Staff's petition package stated: ''[b]ecause incident data demonstrate that consumers perceive play yard mattresses to be uncomfortable, and then place additional soft bedding in infant sleep environments, CPSC staff does not recommend banning supplemental mattresses.'' Although the Commission understands the concerns with after-market mattresses that can be used to supplement an existing play yard mattress, the Commission can address the hazard better, by directing CPSC staff to continue working through the voluntary standards committees to address the hazards associated with the use of after-market mattresses, and thereafter, incorporate the voluntary standard into a mandatory standard, to address both the safety of after-market mattress and consumers' perceived need for after-market mattresses.

Comment 7: Commenters raised concerns that manufacturers make numerous, frequent changes in names and model numbers of play yards, rendering any list of compatible play yard models for after-market play yard mattresses ''out of date as or soon after it is printed.'' One commenter stated that the proposed rule would endorse misuse and, in effect, contradict the mandatory warning stipulated in 16 CFR 1221.2(b)(5)(i) that only the OEM mattress should be used with the play yard.

Response 7: Although some type of certificate of compatibility could address issues with mattress fit and manufacturer concerns with third party manufacturers claiming compatibility, CPSC does not have the authority to regulate inter-business arrangements, such as certificates of compatibility. However, this final rule will require after-market mattresses to be ''tested with each brand and model of product'' [73] in which they are intended to be used. In addition, the final rule will require each mattress to ''specifically identify the brand(s) and Model(s) numbers of products in which it is intended to be used.'' [74] Accordingly, through the requirement in section 14 of the CPSC, as set forth in 16 CFR parts 1107 and 1110, an after-market mattress that complies with this rule will have third party certification that it meets the requirements for play yard mattresses in 16 CFR part 1221, incorporating ASTM F406.

Because the final rule will require that an after-market mattress meet the same dimension and test requirements as the mattress supplied with the product, and must be tested and certified to the same standard, CSPC concludes that there is likely no safety concern for consumers, because the testing and certification require labeling that accomplishes the same goal. Additionally, because the labeling may create some confusion between ASTM F406, section 9.4.2.10 (''Use ONLY mattress/pad provided by manufacturer''), and 16 CFR 1221.2(b)(5)(i), the ASTM F15.18 task group on ad hoc warnings is actively working to revise this message.

Comment 8: Several commenters stated that after-market mattresses should have to meet the same requirements as OEM mattresses. Another commenter stated that staff should continue working with ASTM to include more performance-based testing

[73] ASTM F2933–21, section 5.8.1.2.

[74] ASTM F2933–21, section 7.5.3.1.

for after-market mattresses. Several commenters supported the revised requirements for after-market mattresses developed by the ASTM non-segmented mattress task group, which were approved (and now published) in ASTM F2933–21. A commenter also requested that the final rule wait until the play yard fit and thickness task group completes work.

Response 8: The Commission agrees that after-market play yard and non-full-size crib mattresses should meet the same requirements as OEM mattresses. The Commission addressed these points in the NPR, by proposing that after-market, non-full-size crib mattresses meet the same requirements listed for these products in ASTM F406 section 5.17, *Mattress for Rigid Sided Products,* and by proposing that after-market play yard mattresses meet the ASTM F2933–19 requirement to have the same ''thickness, floor support structure and attachment method as the mattress it is intended to replace.'' The revisions in ASTM F2933–21 replace the design requirement for after-market mattresses with the performance requirements that they are tested to, such that after-market mattresses must meet the same performance requirements as OEM mattresses. Additionally, ASTM F2933–21 requires that after-market mattresses be ''at least the same size,'' and the floor support structure must be ''at least as thick,'' as the OEM mattress. CPSC staff advises that they support these changes to the standard, which appear to be in line with comments CPSC received on the NPR. Accordingly, for the final rule, the Commission will incorporate by reference ASTM's newly revised voluntary standard, ASTM F2933–21. The Commission will not delay this final rule to wait until work is completed in the play yard subcommittee on mattress fit and thickness. Although staff remains engaged on the play yard task group for fit and thickness, changes to the play yard standard are out of scope for this specific rulemaking on crib mattresses.

Moreover, although the commenter implied that the play yard fit and thickness work was nearing completion, staff advises that the task group is focused on measuring the gap between the play yard side and mattress only along the plane of the top of the mattress, without accounting for the flexible nature of fabric or mesh sides. As described in the briefing package on the supplemental mattress petition, a gap alone may not create a hazard if a three-dimensional pocket cannot form to entrap an infant. Staff informs that the task group is generally resistant to using a probe to identify hazardous gaps, and instead, is focused on measuring a gap alone. The figure below was included in the staff briefing package on Petition CP 15–2, illustrating that a one-dimensional measurement may not achieve the desired hazard identification.

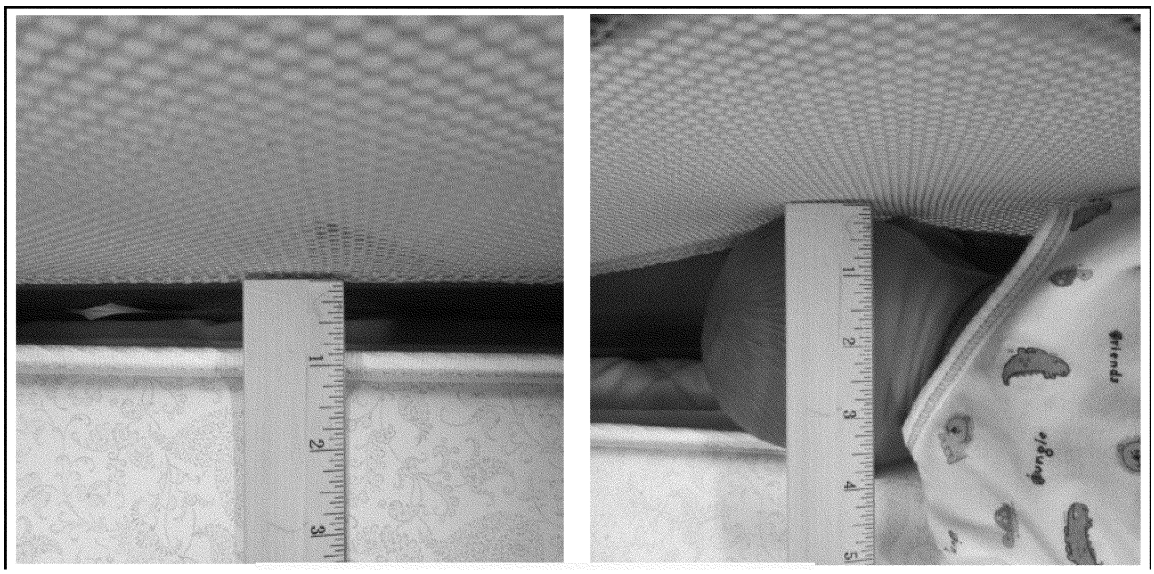

Figure 4. Illustration of Gap Expansion

C. Improving Communication to Caregivers

Comment 9: One commenter recommended that the Commission engage with child safety advocates and other interested parties to undertake a coordinated campaign to communicate to consumers appropriate behaviors that will enhance the safety of infant sleep.

Response 9: The Commission agrees that a coordinated campaign to communicate to consumers the importance of placing an infant on their back to sleep without any covering beyond a light blanket would promote safe infant sleep behaviors for caregivers. However, the Commission acknowledges that a warning label statement on a consumer product cannot guarantee that consumers will read, understand, or heed the warning regarding the hazard.

Comment 10: A commenter recommended a maximum of three warning statements on the product, and provided the suggested language below (verbatim):

1. Place your baby on his/her back only.

2. Do not add soft bedding (blankets, pillows, etc) *under or over* your baby, or anywhere in play yard. Instead, dress baby in a wearable blanket or sleep sack to keep them warm.

3. Use mattress and sheets that fit this product—Use play yard mattress only. If mattress is too small, your baby can roll into gap and suffocate.

For more information, go to *www.cpsc.com/sleepsafety*

Save this warning!

[Link above is a placeholder for a functioning link to more information.]

Response 10: Consistent with the NPR, CPSC agrees with several points raised by the commenter, including that: (1) Consumers are less likely to read lengthy text warnings on familiar products; (2) it is critical to communicate successfully to consumers the hazards related to prone positioning, soft bedding, and gaps created by ill-fitting mattresses; and (3) the prone positioning message needs to be prioritized. While, in general, staff advises that warning labels should be as concise as possible, circumstances specific to these products and hazards warrant more information on the labels, and consumers may not check a website identified on the label. Hazardous use patterns associated with products for infant sleep are common and are likely to be misunderstood by consumers. Consumers may not find short warning statements for crib mattresses convincing, absent elaboration and repetition with rephrasing, especially if the statements contradict the consumers' knowledge, expectations, and experiences. The warning labels in the final rule begin with clear and concise statements pertaining to the typical use patterns involved in SIDS and suffocation incidents, beginning with the prone positioning message. These statements are organized and worded such that they are more likely to be seen and understood, and act as reminders, even if the consumer does not read the rest of the label. The rest of the messaging reiterates, rephrases, and explains the hazards. For example, consumers must consider and understand what it means for a mattress to be ill-fitting. As discussed in Staff's Final Rule Briefing Package, a mattress in an uncompressed state may not visually produce worrisome gaps; yet, various factors can cause a compressed mattress to form hazardous gaps. With few exceptions, including placing the prone positioning warning foremost in the label, the final rule warning label is consistent with recommendations from ASTM F15. Tab D of Staff's Final Rule Briefing Package, and section VI.B of this preamble, outline other exceptions.

Comment 11: A commenter recommended modifying the proposed hazard identifier from ''SIDS and SUFFOCATION HAZARDS'' to ''Help Prevent SIDS and Suffocation.''

Response 11: The Commission declines to adopt the modifications to the warning label as set forth by the commenter. Among other concerns, the comment-proposed hazard identifier may confuse the consumer viewing the warning label. The viewer of the label may infer that the statement, ''Help Prevent SIDS and Suffocation,'' is a standalone statement, unrelated to the rest of the warning message. Use of ''Help,'' although accurate, may soften the language, and perhaps, demotivate the reader. ASTM subcommittee members do not support the commenter's warning approach. During the ASTM F15.66 subcommittee meeting on June 9, 2021, attendees stated that such a change would dilute the warning message, and opined that the hazard identifier should remain as balloted in F15 (21–02) (*i.e.,* ''SUFFOCATION HAZARDS''). The hazard identifier and ballot are discussed further in Tab D of Staff's Final Rule Briefing Package and section VI.B of this preamble.

Comment 12: A commenter advised against all-caps lettering to emphasize words that ''lack concrete meaning,'' such as ''DO NOT'' and ''USE ONLY.'' A commenter posited that this capitalization will be inferred by the consumer to mean the adjacent text is not as important, and therefore, the adjacent text, which pertains to hazardous use, will not be read by the consumer.

Response 12: The Commission declines to follow the commenter's suggestion. Based on staff's advice, we conclude that the all-caps lettering used in the final rule warning label plays an important role in attracting a consumer's attention to the hazardous-use warnings. Recent regulations use capitalization in this manner: [75] All-caps lettering is used in the recommendations from the Ad Hoc Language Task Group; and all-caps lettering pertaining to crib mattresses has been supported in ASTM F15.66 and balloted by ASTM F15 without objection. For more information on this ballot, see Tab D of Staff's Final Rule Briefing Package and section VI.B of this preamble.

Comment 13: A commenter advised the Commission to eliminate warning statements that can and should be addressed through performance standards. The commenter's point is provided in the context of a recommendation to standardize sizes of play yards and play yard mattress sheets.

Response 13: The Commission agrees that performance requirements should be used instead of warning statements, where feasible, and that warning statements should be omitted if they do not contribute to the safety of the product. Warnings are inherently limited in effectiveness, because they depend fallibly on persuading consumers to alter their behaviors in ways to avoid hazards. In contrast, performance requirements attempt to reduce or eliminate access to the hazards. The Commission's approach is to make warnings as motivating as possible, given their inherent fallibility, and particularly when they must be used instead of performance requirements, or when they are used in a supporting role to performance requirements that minimize, rather than eliminate, exposure to hazards.

The commenter is referring to a separate standard, ASTM F406, *Standard Consumer Safety Specification for Non-Full-Size Baby Cribs/Play Yards* (incorporated into 16 CFR part 1221), and ongoing activity by the ASTM F15.18 subcommittee contributing to that effort, which is out of scope for the current rulemaking. However, the Commission encourages the ASTM F15.18 subcommittee to develop more effective performance requirements to reduce the reliance on warnings.

Comment 14: A commenter stated that to support the crib mattress warnings, CPSC should develop pictograms and evaluate comprehension of pictograms using the methods outlined in ANSI Z535.3.

Response 14: Well-designed graphics may be able to supplement the crib mattress warnings, such as by increasing the noticeability of the warnings. Graphics are also helpful for consumers with limited or no English literacy. However, the design of effective graphics is a complicated matter that requires comprehension testing with the target audience. A poorly designed graphic may have limited or no effectiveness, and may even elicit the opposite effect than intended; *i.e.,* a ''critical confusion,'' in which the reader infers that s/he should take the prohibited action to avoid the hazard. Although CPSC is not opposed to considering suitable graphics pertaining to crib mattress warnings, the agency will not delay the final rule until suitable graphics are developed.

Comment 15: A commenter recommended revising the play yard mattress warning language, as set forth in the comment, in part, because the Flesch-Kincaid readability assessment tool in MS Word indicated the message required only a ''5.9 grade reading level.''

Response 15: For consistency and comparison purposes, staff used the Flesch-Kincaid readability assessment

[75] For example, see the Commission Briefing Package: Final Rule—Safety Standard for Gates and Enclosures: *https://cpsc.gov/s3fs-public/Final%20Rule%20-%20Safety%20Standard%20for%20Gates%20and%20Enclosures.pdf?lHExt6trsEuD56jiQTi7Ab0TjzdVQ_HH.*

tool in MS Word (Microsoft Office Professional Plus 2019) on the play yard mattress warning set forth by the commenter and the final rule label for after-market mattresses for mesh/fabric-sided products.[76] Staff found that the play yard mattress warning urged by the commenter returned a 5.4 Flesch-Kincaid Grade Level with a reading ease of 77.1. The final rule after-market mattress for mesh/fabric-sided products warning returned a 3.4 Flesch-Kincaid Grade Level with a reading ease of 80.8. However, the rating for the final rule label, as proposed in the NPR, does not include the product-specific information to be added:

[All warnings added by the original manufacturer which are in addition to those required by this standard.] [Assembly/attachment instructions that were provided on the original mattress.] [The specific brand(s) and model(s) number(s) of the product(s) in which the mattress is intended to be used].

Therefore, staff also tested the reading level for the final rule warning label for full-size crib mattresses,[77] and found it had a 3.8 Flesch-Kincaid Grade Level with a reading ease of 77.7. A reading ease score of 70 to 80 is considered U.S. 7th grade school level, and a score of 80 to 90 is considered U.S. 6th grade school level. In general, the Commission prefers for warnings to be at the 6th grade level or lower, consistent with literature from Leonard, Otani, and Wogalter (1999);[78] however, the 8th grade level is considered ''plain English.'' Notably, the Flesch-Kincaid tool provides an imperfect assessment of readability, because it considers only the number of words, sentences, and syllables, meaning that text with low reading-level thresholds are not necessarily more meaningful or understandable. With few exceptions, the final rule language is consistent with recommendations from ASTM F15 (regarding the exceptions, see Tab D of Staff's Final Rule Briefing Package).

Comment 16: A commenter stated that CPSC should determine whether it is appropriate to add warnings content regarding fall or strangulation.

Response 16: Based on staff's advice, the Commission does not find it appropriate to add to the crib mattress warnings content regarding fall or strangulation. Warnings pertaining to these hazards are addressed by other standards, including ASTM F1169, *Standard Consumer Safety Specification for Full-Size Baby Cribs* (incorporated into 16 CFR part 1219), and ASTM F406 (incorporated into 16 CFR parts 1220 and 1221). As discussed by the commenter, adding more information to the final rule warnings may dilute the message, resulting in some consumers being less likely to read the warnings. Furthermore, ASTM F15 did not find it appropriate to include warning content regarding falls or strangulations. Staff will continue to monitor the data for evidence that these additional warnings should be added.

Comment 17: A commenter stated that the warnings proposed in the NPR are incompatible with the warnings in ASTM F406, because the requirements in the NPR allow after-market mattresses in play yards, which are not from the OEM; whereas, ASTM F406 includes warnings to use only the mattress provided by the manufacturer.

Response 17: The Commission is aware of the warning labels required by the separate rules. Although modifications to warnings in F406 are outside the scope of this rulemaking for crib mattresses, we note that the play yard subcommittee, ASTM F15.18, has an active task group working to update the warning section of ASTM F406 to include the ad-hoc warning recommendation and to address other issues. This play yard task group is actively discussing how to update[79] this warning message. If the play yard voluntary standard is revised, the CPSC will evaluate the revision for inclusion in the mandatory standard for play yards through the Public Law 112–28 update process.

Comment 18: A commenter stated that CPSC should consider the developments to safety information requirements discussed in the crib mattress ASTM task group and subcommittee in the period between the NPR and final rule.

Response 18: After the NPR was published, staff continued to work with ASTM to address deficiencies in the safety information requirements in ASTM F2933. The final rule includes some of the safety information recommendations from ASTM task groups and subcommittees, including subcommittee F15.66, such as the maximum side gap between a full-size crib mattress and full-size crib. The final rule does not incorporate other suggestions from ASTM members, such as excluding ''SIDS'' from the hazard identifier, and presenting the prone positioning warning lower in the warning labels. Tab D of Staff's Final Rule Briefing Package contains additional information.

D. Procedural Comments

Comment 19: Commenters both supported and opposed the proposed 6-month effective date for the final rule. Some commenters urged the effective date of a final rule to be as soon as possible, because additional time for the rule to become effective would put infants at risk. Other commenters requested an indefinite delay of the rulemaking, until ASTM completes changes and updates to the voluntary standard for crib mattresses (ASTM F2933), and the standard associated with play yards (ASTM F406).

Response 19: For the final rule, the Commission will retain the proposed 6-month effective date. Crib mattress suppliers have had lead time to prepare for the final rule since the NPR was published on October 26, 2020. Many crib mattresses within the scope of the final rule require no change in design to achieve compliance with the final rule. Furthermore, 6 months from the change in a voluntary standard is the time frame that JPMA uses for its certification program. Consequently, compliant manufacturers are used to this time frame to comply with a modified standard. Additionally, the Commission will not wait for completion of work in the ASTM F406 standard to finalize this crib mattress rule, because modifications to ASTM F406 are out of the scope of this proceeding.

Comment 20: A commenter states that the NPR is unconstitutional because CPSC proposed to incorporate by a reference a voluntary standard, instead of publishing all of the regulatory text for the crib mattress rule in the **Federal Register**. The commenter asserted that the CPSC forces the public to pay for access to the law, thereby offending ''our constitutional structure, due process, the First Amendment, and equal protection.'' The commenter, in support of their contention that incorporation by reference (IBR) is unconstitutional, stated:

- No one can own the law, privatizing the law is not in accordance with our form of constitutional government and grants ASTM a monopoly ownership over the law;
- Due process under the Fifth Amendment requires the public to have free access to the laws that regulate people or entities, and the NPR allegedly violates due process by failing to provide the public with fair notice of the standard because the commenter

[76] Figure 9 in the Appendix of the ESHF memorandum of the Commission NPR Briefing Package on Crib Mattresses.

[77] Figure 8 in the Appendix of the ESHF memorandum of Staff's NPR Briefing Package.

[78] Leonard, S.D., Otani, H., & Wogalter, M.S. (1999). Comprehension and memory. In M.S. Wogalter, D.M. DeJoy, & K.R. Laughery (Eds.), *Warnings and risk communication* (pp. 149–187). Philadelphia: Taylor & Francis.

[79] *https://www.cpsc.gov/s3fs-public/2021-07-08-ASTM-Play-Yard-Ad-hoc-language-meeting.pdf.*

contends that to view the content of the voluntary standard, the NPR requires the public to pay ASTM or to travel to Bethesda, MD, to see a copy at CPSC headquarters;

• CPSC is creating a monopoly for ASTM and forcing the public ''to rely on the whims of ASTM,'' whom the commenter states is a private company that is incentivized to increase the prices of its standards, and which harms consumers more than businesses because it creates a financial barrier to accessing product safety standards;

• IBR violates the First Amendment because it does not allow free dissemination of the law and discussion of its contents; and

• IBR violates equal protection of the laws under the Fifth Amendment because it gives ASTM members a preference over non-members, because ASTM members have access to the voluntary standard as it is being developed and during the comment period, while non-members do not. The commenter believes that ASTM only makes the voluntary standard available to view for free after the public comment period closes.

Response 20: We disagree that the regulatory text is behind a paywall and that the draft final rule is unconstitutional. As set forth in more detail below, the commenter's factual premise is inaccurate, because the regulatory text for every CPSC-proposed rule is printed in the **Federal Register**. Additionally, the content of the law is available to the public, both before and after the voluntary standard is incorporated by reference, because the text of the voluntary standard is described in detail in the staff's proposed rule briefing package, draft final rule briefing package, and in the proposed and final rulemaking notices printed in the **Federal Register**. Stakeholders also have access to the text of the voluntary standard online, for free, both during the comment period (*https://www.astm.org/CPSC.htm*), and after the rule becomes final (at *https://www.astm.org/READINGLIBRARY/*). Any person can ''disseminate'' the proposed rule by citing the **Federal Register**, providing a link, or providing a copy of the notice. Additionally, anyone can ''disseminate'' the content of the voluntary standard by providing a link to ASTM's website. Finally, anyone can participate in ASTM meetings to develop the voluntary standard, and CPSC encourages the public to participate. Although only ASTM members can vote on a voluntary standard, ASTM provides discounts on membership for certain members of the public, such as students. Please contact ASTM for more information.

Section 104 of the CPSIA directs the Commission to issue standards for durable infant or toddler products that are ''substantially the same as,'' or more stringent than, applicable voluntary standards, if the Commission determines that more stringent requirements would further reduce the risk of injury. In this case, the final rule would incorporate by reference ASTM F2933–21, with modifications to make the standard more stringent, to further reduce the risk of injury associated with crib mattresses. Staff notes that staff's proposed rule and draft final rule briefing packages contain a description of the performance and labeling requirements in the ASTM standard, including a side-by-side chart showing regulatory text and the changes made by the rule.

With regard to IBR procedures, we note that ASTM's voluntary standards are protected by copyright, which the Commission (and the federal government generally) must observe. The United States may be held liable for copyright infringement. 28 U.S.C. 1498. Accordingly, the Commission cannot violate copyright law by publishing ASTM's voluntary standards in the CFR. The Office of the Federal Register (OFR) has established procedures for incorporation by reference that seek to balance the interests of copyright protection and public accessibility of material. 1 CFR part 51. OFR's regulations are based on Freedom of Information Act provisions that require materials to be ''reasonably available'' when incorporated by reference with approval of the Director of the Federal Register. 5 U.S.C. 552(a)(1). Under the OFR's requirements, an agency may incorporate by reference specific publications, including standards, if they are ''reasonably available to and usable by the class of persons affected.'' 1 CFR 51.7. To ensure the material is ''reasonably available,'' an agency must summarize the material it will incorporate by reference and discuss in the **Federal Register** notice how that material is available to interested parties. *Id.* §§ 51.3(a), 51.5(a).

The Commission complies with the requirement that publications, including standards, are ''reasonably available to and usable by the class of persons affected,'' whenever incorporating material by reference. For example, when the Commission proposes a rule under section 104 of the CPSIA, the Commission describes and summarizes the requirements of the rule, including the voluntary standard, in the preamble of the rule printed in the **Federal Register**, and explains that ASTM's copyrighted voluntary standards are available to review online for free during the comment period at *https://www.astm.org/CPSC.htm.* Once a rule becomes effective, ASTM provides a read-only copy of the standard for review on the ASTM website at: *https://www.astm.org/READINGLIBRARY/.* As always, any person can purchase a voluntary standard from ASTM, or may schedule a time to review a voluntary standard (for free) at the Commission's headquarters in Bethesda, MD, or at the National Archives and Records Administration (NARA). Accordingly, citizens who are interested in the content of the law have unimpeded access to the regulation, and have several avenues for free access to the text of voluntary standards incorporated by reference into a mandatory CPSC standard for a durable infant or toddler product.

Comment 21: A commenter stated that they intend their comment to be a significant adverse comment that requires CPSC to withdraw the NPR, citing eight previous times the commenter has submitted a similar comment on CPSC's IBR process for rules updating a section 104 standard.

Response 21: The commenter is referencing previous comments made regarding the Commission's direct final rules to update durable infant or toddler product rules that have already been issued under section 104 of the CPSIA. The Commission did not find similar comments on those updates to be a significant adverse comment. In this case, the Commission issued a proposed rule, and is now issuing a final rule, to establish a consumer product safety standard for crib mattresses, and is not updating an existing rule using a direct final rule. Accordingly, the ''significant adverse comment'' designation is inapplicable to the current rulemaking. In any event, the Commission declines to withdraw the proposed rule based on the inaccurate factual premise regarding IBR procedure contained in this comment.

Comment 22: A commenter asserted that section 9 of the CPSA requires the CPSC to publish the text of a proposed consumer product safety rule in the **Federal Register**. Because section 104 rules are considered consumer product safety rules under the CPSA, the commenter argued that CPSC is required to published the text of the regulation in the **Federal Register**, and the CPSC did not meet this requirement in the NPR for crib mattresses.

Response 22: The Commission publishes the text of proposed rules under section 104 of the CPSIA in the

Federal Register. However, the rulemaking procedure described in section 9 of the CPSA, cited by the commenter, is inapplicable to rules issued under section 104 of the CPSIA. Section 104 of the CPSIA contains a different rulemaking authority and different rulemaking procedures. For example, 15 U.S.C. 2058(c), cited by the commenter, also requires a preliminary regulatory analysis that is inapplicable to rules issued under section 104.

Comment 23: A commenter stated that the Freedom of Information Act (FOIA) requires agencies to publish the text of its substantive rules in the **Federal Register**, citing 5 U.S.C. 552(a)(1)(D). The commenter stated that § 552(a) creates an exception to this requirement for agencies that incorporate by reference a provision that is ''reasonably available to the class of persons affected thereby . . . with the approval of the Director of the Federal Register.'' The commenter asserted that the CPSA, which allegedly requires publishing the text of a proposed rule in the **Federal Register**, and the FOIA are in conflict, and that CPSC must follow the CPSA because it is a more specific, later-enacted, requirement and presents a ''clear congressional imperative for CPSC to follow the text of the [CPSA],'' citing 15 U.S.C. 2058(c). The commenter asserted that based on the CPSA, the Commission must publish the text of the NPR and cannot direct the public to buy a copy of the regulatory text from someone else.

Response 23: As stated in response to the preceding comments, stakeholders do not need to purchase a copy of the voluntary standard to comment on the rule, and the Commission publishes the text of proposed rules under section 104 of the CPSIA in the **Federal Register**. A summary of the regulatory text is available for free in the staff briefing package and the proposed rule. A free copy of the voluntary standard is available through ASTM's website, NARA, and at the Commission's headquarters in Bethesda, MD, as described in response to preceding comments. Additionally, section 104 of the CPSIA contains a different rulemaking authority and procedures than the statutory provision cited by the commenter for CPSA section 7 and 9 rules. The statute cited by the commenter is inapplicable to section 104 rules. Finally, CPSC follows the OFR's requirements for incorporation by reference, including the exception in 5 U.S.C. 552(a), which allows incorporation by reference when the material is ''reasonably available to the class of persons affected thereby . . . with the approval of the Director of the Federal Register.''

Comment 24: A commenter contended that the CPSC should not rely on the Office of the Federal Register's interpretation of the exception for IBR materials in 1 CFR 51.5, and should instead publish the text of the voluntary standard.

Response 24: We disagree. The OFR's interpretation of the exception is consistent with the statute, has not been struck down by any court, and the CPSC declines to potentially infringe a copyright. Additionally, as reviewed in response to preceding comments, stakeholders have free access to the content of the proposed and final rules, including the regulatory text and the voluntary standards upon which the standards are based.

Comment 25: A commenter alleged that CPSC's proposal to IBR the crib mattress voluntary standard, rather than set forth the text of the regulation in the OFR, is procedurally deficient because the rule allegedly only allows access to the text of the voluntary standard after a rule is in effect, and because it leaves access to the law up to the ''whims'' of ASTM. The commenter alleged that ASTM can raise the cost of the voluntary standard, and can ''renege'' on its promise to keep the standard available in a reading room.

Response 25: The text of the proposed rule, and a summary of the voluntary standard, are available for free on the Commission's website in the staff's briefing packages and in the draft rules, which are also available, when published, in the **Federal Register**. Moreover, the text of the voluntary standard is available for free both before and after the comment period, as described in response to preceding comments. Finally, stakeholders can view the rule for free by contacting NARA and by coming to view the standard at the Commission's headquarters in Bethesda, MD.

VIII. Mandatory Standard for Crib Mattresses

The final mandatory standard for crib mattresses incorporates by reference the most recent voluntary standard for crib mattresses, ASTM F2933–21, with modifications, largely as proposed in the NPR, to make the standard more stringent, to further reduce the risk of injury associated with crib mattresses. Below we summarize modifications made to the voluntary standard in the final rule.

A. Cyclic Test for Coil or Spring Lacerations

To further reduce the risk of infant lacerations from exposed coils and springs, the Commission will require a cyclic loading test for all crib mattresses that use coils and springs, as follows:

1. Mattress shall be tested in an enclosed frame measuring 29 inches x 53 inches (737 mm x 1346 mm) for the purpose of restricting mattress movement. A crib meeting the requirements of ASTM F1169–19 would suffice.
2. The mattress can be placed on top of a ¾-inch piece of plywood or oriented strand board (OSB), which is rigidly supported along the perimeter.
3. An impactor with the dimensions of the vertical impactor of ASTM F1169–19 weighing 30 lbs. shall be dropped from a height of 6 inches from the top of the mattress surface to the bottom of the impactor, 250 times in four locations (specified in Figure 5), for a total of 1,000 cycles. Cyclic loading rate shall be one drop every 4 ± 1 seconds.
4. At the conclusion of the cyclic loading test, the mattress shall be removed from the test enclosure and visually inspected for exposed wires or coil springs.
5. The coil spring test shall be repeated on each sleep surface of the mattress. The test shall not be repeated using a mattress that has been previously tested with the coil spring test.

The final rule clarifies that two mattresses are required for cyclic load testing, one mattress for each side of the mattress being tested, because testing can be destructive to the test sample.

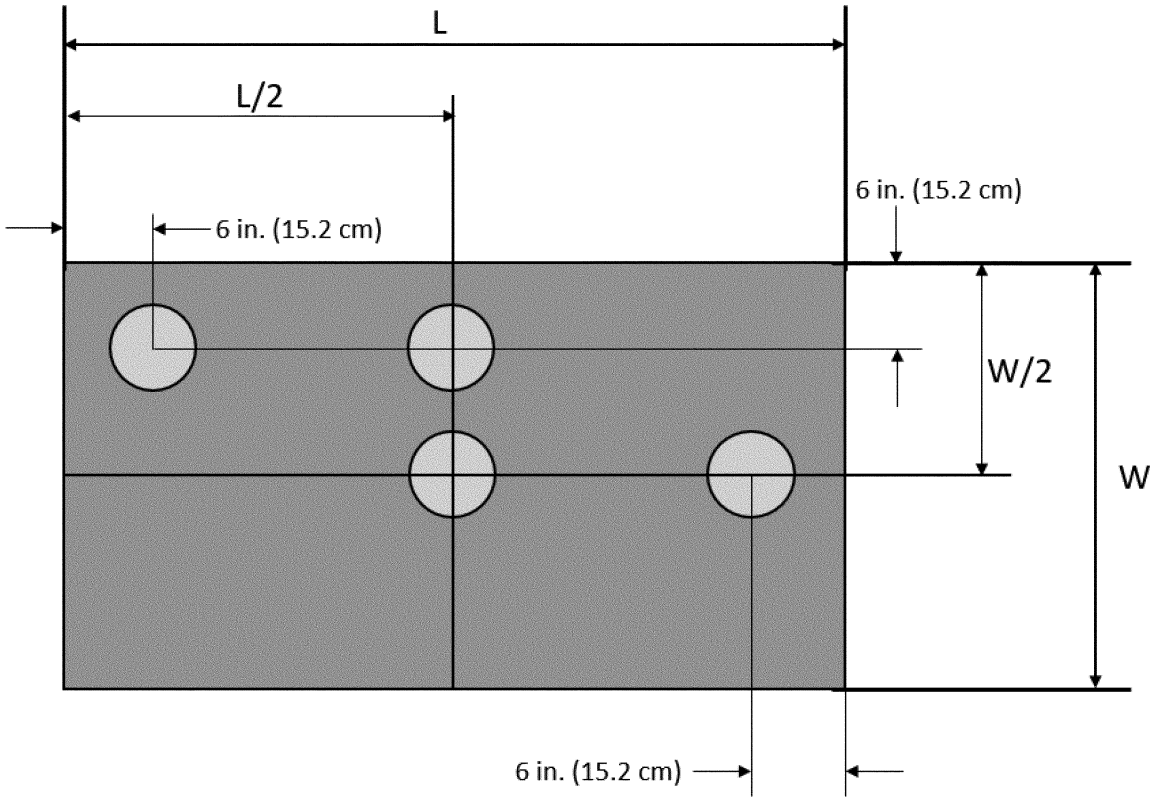

Figure 5. Impact test locations.

B. Test for Mattress Compression From Fitted Sheets

To further reduce the risk of injury associated with corner gap entrapment from compression by fitted sheets, the final rule requires a new test for full-size crib mattresses:

1. To condition the sheet for compression testing, a store-bought, fitted mattress sheet, intended for the tested mattress size, consisting of 100 percent cotton, shall be washed in hot water (50 °C [122 °F] or higher), and dried a minimum of two times on the highest setting, using household textile laundering units.

2. The shrunken fitted sheet shall be placed fully on the mattress, such that each sheet edge is wrapped fully around and under the mattress.

3. The mattress, with the shrunken sheet, shall be positioned in the corner, following section 6.2.2.1 of ASTM F2933–21.

4. After positioning, while no force is being applied, measure the gap from the projected crib corner, located 53 in. from Wall C and 28⅝ in. from Wall D, and the crib mattress. See Figure 6 for illustration. The gap shall not exceed 3.15 in.

5. Rotate the mattress 180°, and repeat steps 3 and 4.

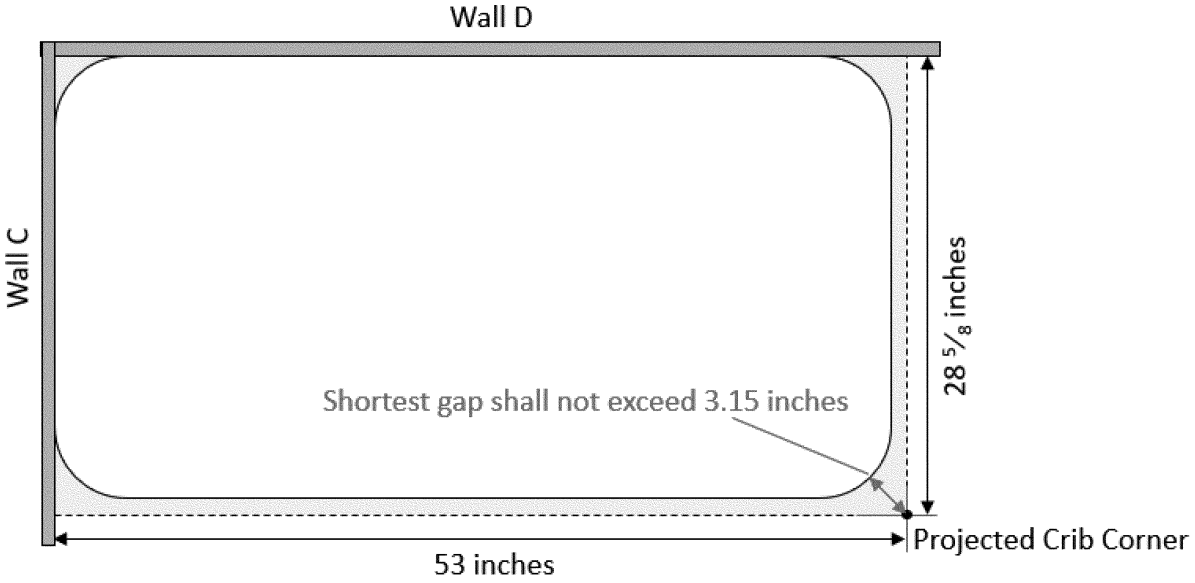

Figure 6. Staff's proposed location of the projected crib corner, from which the corner gap is measured.

The Commission is not aware of incidents related to non-full-size crib mattresses compressing when sheets are installed, and received no comments on the issue. Therefore, at this time, the final rule does not require a similar sheet compression test for non-full-size crib mattresses. However, the final rule modifies the test procedure to accommodate larger crib mattresses, by requiring the corner gap to be measured from a projected crib corner.

C. Dimension Requirements for After-Market Non-Full-Size Crib Mattresses

To further reduce the risk of injury associated with after-market, non-full-size crib mattresses, the final rule requires a dimensional performance requirement for all non-full-size crib mattresses. The *Stability; Cord/Strap Length;* and *Crib-Side Height* requirements in F406 are also applicable to non-full-size crib mattresses, but the requirements were not referenced in ASTM F2933–19, or by modifications in the NPR. The newly published ASTM F2933–21 added a reference to these requirements in section 5.9 of the standard. The final rule adds a reference to *Crib-Side Height* to the list of F406 requirements referred to in section 5.7.2 of ASTM F2933–21, and removes this reference from section 5.9, because it does not apply to play yard mattresses. Accordingly, the final rule references the F406 requirements for *Stability* and *Cord/Strap Length* in section 5.7.2 and section 5.9 of ASTM F2933–21, because these are general requirements applicable to non-full-size crib and play yard mattresses. This change is consistent with the changes proposed in the NPR, to ensure that all after-market, non-full-size crib mattresses are subject to the same requirements as OEM non-full-size crib mattresses.

ASTM F2933–21 includes additional requirements for after-market non-rectangular non-full-size crib mattresses, which ensure the after-market mattress maintains the proper fit, support, and instruction storage accommodations. The final rule extends these requirements to all after-market, non-full-size crib mattresses, to be consistent with the NPR proposal to extend requirements to all non-full-size crib mattresses, regardless of shape.

Appendix A to Tab C of Staff's Final Rule Briefing Package contains a redline of changes in the final rule to section 5.7.2 of ASTM F2933–21.

D. Corrections to Section 5.9 of ASTM F2933–21

To accommodate the modification for non-full-size cribs in section 5.7, the final rule removes references to after-market, non-full-size crib mattresses from section 5.9 of ASTM F2933–21, such that section 5.9 focuses solely upon performance requirements for after-market play yard mattresses.

The NPR proposed to replace the term ''replacement mattress'' in ASTM F2933–19 section 5.9.1.3, with the term ''after-market'' mattresses. ASTM F2933–21 made this revision, and thus, the final rule does not require this revision, if the Commission incorporates by reference ASTM F2933–21.

E. Mattress Firmness Test

To further reduce the risk of infant suffocation associated with surface softness in crib mattresses, the final rule requires a mattress firmness test for all crib mattresses within the scope of the standard, based on a test for mattress firmness in section 8 of AS/NZS 8811.1:2013:

1. Mark three equidistant points along the longitudinal center line, with one at the center, and the other two equidistantly between the center and the edge of the mattress. Choose one more ''worst-case'' scenario test location(s) where an infant's head might lay in a particularly soft spot, or an infant's nose or mouth might contact a protrusion above the sleep surface.

2. Hold the test fixture with its base horizontally, and rotate it so the feeler arm is aligned with the center line of the sleep surface, and pointing in the same direction for each test; then gently set down the fixture on one of the test locations, ensuring that the edge of the bottom disk does not extend beyond the edge of the sleep surface.

3. If the level indicates that the feeler arm is approximately level when the fixture is resting on the sleep surface, observe whether the feeler arm makes any contact with the top of the sleep surface or cover. If the feeler arm is not level, decompress the mattress, allow it to settle, and start again. If the feeler arm contacts the sleep surface even when the test fixture is tilted back so as to raise the feeler arm, assume that such contact would occur had the fixture come to rest horizontally.

4. Repeat steps at remaining locations.

F. Modifications to Safety Information

As detailed in Tab D, Appendix A, of Staff's Final Rule Briefing Package, the final rule includes a redline of the modifications to the requirements for the safety information that accompanies crib mattresses, as proposed in the NPR, including warning labels, packaging, and instructions. Labeling modifications include the following:

- Improved definition of ''conspicuous'' to clarify that the warning label's placement must make it visible to someone who positions the mattress for use;
- Updated the general marking and labeling requirements;
- Improved warning labels and examples;
- Re-organized and clarified the marking and labeling requirements for manufacturers, test labs, and other viewers of the standard;
- Added warning requirements for full-size crib mattress packaging and improved the warning requirements for packaging of after-market mattresses for play yards and non-full-size cribs; and
- Added a new section on instructional literature, which provides an additional medium by which to communicate safe-use information.

These modifications are intended to further reduce the risk of death and serious injury associated with crib mattresses, such as SUID related to prone positioning of infants, soft bedding in sleep areas, and hazardous gaps between crib mattresses and product sides. The majority of the modifications incorporate recommendations from stakeholders participating in ASTM F15, with several deviations based on CPSC staff's further consideration of the available data. While safety information is unlikely to effectively address the identified hazards, these modifications are likely to support the effectiveness of the performance requirements, increase the likelihood of consumers understanding the hazards, and clarify the requirements for manufacturers, test labs, and other viewers of the standard. Section VI.B of this preamble, and Tab D of Staff's Final Rule Briefing Package contains a detailed list of the final rule modifications.

IX. Amendment to 16 CFR Part 1112 To Include NOR for Crib Mattresses

The CPSA establishes certain requirements for product certification and testing. Products subject to a consumer product safety rule under the CPSA, or to a similar rule, ban, standard or regulation under any other act enforced by the Commission, must be certified as complying with all applicable CPSC-enforced requirements. 15 U.S.C. 2063(a). Certification of children's products subject to a children's product safety rule must be based on testing conducted by a CPSC-accepted third party conformity assessment body. *Id.* 2063(a)(2). The Commission must publish an NOR for the accreditation of third party conformity assessment bodies to assess conformity with a children's product safety rule to which a children's product is subject. *Id.* 2063(a)(3). The final rule, to be codified as 16 CFR part 1241, *Standard Consumer Safety Specification for Crib Mattresses,* is a children's product safety rule that requires the issuance of an NOR.

The Commission published a final rule, *Requirements Pertaining to Third Party Conformity Assessment Bodies,* 78 FR 15836 (March 12, 2013), codified at 16 CFR part 1112 (''part 1112'') and effective on June 10, 2013, which establishes requirements for accreditation of third party conformity assessment bodies to test for conformity with a children's product safety rule in accordance with section 14(a)(2) of the CPSA. Part 1112 also codifies all of the NORs issued previously by the Commission. All new NORs for new children's product safety rules, such as the crib mattress standard, require an amendment to part 1112. Accordingly, in the NPR, the Commission proposed to amend part 1112 to add part 1241, *Safety Standard for Crib Mattresses,* in the list of NORs.

Test laboratories applying for acceptance as a CPSC-accepted third party conformity assessment body to test to the new standard for crib mattresses are required to meet the third party conformity assessment body accreditation requirements in part 1112. When a laboratory meets the requirements as a CPSC-accepted third party conformity assessment body, the laboratory can apply to the CPSC to have 16 CFR part 1241, *Standard Consumer Safety Specification for Crib Mattresses,* included in the laboratory's scope of accreditation of CPSC safety rules listed for the laboratory on the CPSC website at: *www.cpsc.gov/labsearch.*

X. Amendment to Definitions in Consumer Registration Rule

The statutory definition of ''durable infant or toddler product'' in section 104(f) applies to all of section 104 of the CPSIA. In addition to requiring the Commission to issue safety standards for durable infant or toddler products, section 104 of the CPSIA also directed the Commission to issue a rule requiring that manufacturers of durable infant or toddler products establish a program for consumer registration of those products. Public Law 110–314, section 104(d).

Section 104(f) of the CPSIA defines the term ''durable infant or toddler product'' and lists examples of such products:

(f) DEFINITION OF DURABLE INFANT OR TODDLER PRODUCT. As used in this section, the term ''durable infant or toddler product'' —

(1) means a durable product intended for use, or that may be reasonably expected to be used, by children under the age of 5 years; and

(2) includes —

(A) full-size cribs and non-full-size cribs;

(B) toddler beds;

(C) high chairs; booster chairs, and hook-on-chairs;

(D) bath seats;

(E) gates and other enclosures for confining a child;

(F) play yards;

(G) stationary activity centers;

(H) infant carriers;

(I) strollers;

(J) walkers;

(K) swings; and

(L) bassinets and cradles.

Public Law 110–314, section 104(f).

The product categories listed in section 104(f)(2) of the CPSIA represent a non-exhaustive list of durable infant or toddler product categories, including products for infant sleep, such as cribs (full-size and non-full-size), toddler beds, bassinets and cradles, and play yards. *Id.* 2056a(f)(2). Although crib mattresses are used with infant sleep products, crib mattresses are not included in the statutory list of durable infant or toddler products.

In 2009, the Commission issued a rule implementing the consumer registration requirement. 16 CFR part 1130. As the CPSIA directs, the consumer registration rule requires each manufacturer of a durable infant or toddler product to: Provide a postage-paid consumer registration form with each product; keep records of consumers who register their products with the manufacturer; and permanently place the manufacturer's name and certain other identifying information on the product. When the Commission issued the consumer registration rule, the Commission identified six additional products as ''durable infant or toddler products'':

- Children's folding chairs,
- changing tables,
- infant bouncers,
- infant bathtubs,
- bed rails, and
- infant slings.

16 CFR 1130.2. The Commission stated that the specified statutory categories were not exclusive, but that the Commission should explicitly identify the product categories that are covered. The preamble to the 2009 final

consumer registration rule states: ''Because the statute has a broad definition of a durable infant or toddler product but also includes 12 specific product categories, additional items can and should be included in the definition, but should also be specifically listed in the rule.'' 74 FR 68668, 68669 (Dec. 29, 2009).

In the NPR, the Commission proposed to amend part 1130 to include ''crib mattresses,'' as defined in ASTM F2933, including full-size crib mattresses, non-full-size crib mattresses, and after-market mattresses for play yards and non-full-size cribs, as durable infant or toddler products. 85 FR at 67923. The Commission proposed to include ''crib mattresses'' as a ''durable infant or toddler product'' because: (1) They are intended for use, and may be reasonably expected to be used, by children under the age of 5 years; (2) they are products similar to the products listed in section 104(f)(2) of the CPSIA; (3) they are used in conjunction with other durable infant or toddler products used for unattended infant sleep, such as cribs, bassinets, and play yards; and (4) CPSC cannot fully address the risk of injury associated with such infant sleep products without addressing the hazards associated with the use of crib mattresses in these infant sleep products. *Id.* The Commission received no comments on this proposal, and now finalizes the amendment to part 1130 to add ''crib mattresses'' to the list of durable infant or toddler products.

XI. Incorporation by Reference

Section 1241.2(a) of the final rule provides that each crib mattress must comply with applicable provisions of ASTM F2933–21. The Office of the Federal Register (OFR) has regulations concerning incorporation by reference. 1 CFR part 51. For a final rule, agencies must discuss in the preamble to the rule the way in which materials that the agency incorporates by reference are reasonably available to interested persons, and how interested parties can obtain the materials. Additionally, the preamble to the rule must summarize the material. 1 CFR 51.5(b).

In accordance with the OFR's requirements, sections V, VI, and VIII of this preamble summarize the provisions of ASTM F2933–21 that the Commission is incorporating by reference. ASTM F2933–21 is copyrighted. Before the effective date of this rule, you can view a copy of ASTM F2933–21 at: *https://www.astm.org/cpsc.htm.* Once the rule becomes effective, ASTM F2933–21 can be viewed free of charge as a read-only document at: *https://www.astm.org/READINGLIBRARY/.* To download or print the standard, interested persons can purchase a copy of ASTM F2933–21 from ASTM, through its website (*http://www.astm.org*), or by mail from ASTM International, 100 Bar Harbor Drive, P.O. Box 0700, West Conshohocken, PA 19428; *http://www.astm.org.* Alternatively, interested parties can inspect a copy of the standard free of charge by contacting Alberta E. Mills, Division of the Secretariat, U.S. Consumer Product Safety Commission, 4330 East West Highway, Bethesda, MD 20814; telephone: 301–504–7479; email: *cpsc-os@cpsc.gov.*

XII. Effective Date

The Administrative Procedure Act (APA) generally requires that the effective date of a rule be at least 30 days after publication of the final rule. 5 U.S.C. 553(d). The NPR proposed a 6-month effective date for the final rule. Commenters both supported and opposed the 6-month effective date. Some commenters urged the effective date be as soon as possible, indicating that additional time for the rule to become effective would put infants at risk. Other commenters requested an indefinite delay of the rulemakings until ASTM completes changes and updates to the voluntary standard, and those associated with crib mattresses.

After considering the comments, the Commission now finalizes the rule with a 6-month effective date, because 6 months typically is sufficient time for suppliers to come into compliance with a new standard; typical for other CPSIA section 104 rules; and usually is the period that JPMA allows for products in their certification program to shift to a new standard, once that new standard is published. Accordingly, juvenile product manufacturers are accustomed to adjusting to new standards within 6 months, and suppliers have now had lead time to prepare for this rule since the NPR was published on October 26, 2020. Finally, many crib mattresses within the scope of the final rule require no change in design to achieve compliance with the final rule.

XIII. Regulatory Flexibility Act [80]

A. Introduction

The Regulatory Flexibility Act (RFA), 5 U.S.C. 601–612, requires that agencies review a proposed rule and a final rule for the rule's potential economic impact on small entities, including small businesses. Section 604 of the RFA generally requires that agencies prepare a final regulatory flexibility analysis (FRFA) when promulgating final rules, unless the head of the agency certifies that the rule will not have a significant economic impact on a substantial number of small entities. Staff prepared a FRFA that is available at Tab E of Staff's Final Rule Briefing Package. An FRFA is required to describe the impact of the rule on small entities and identify any alternatives that may reduce the impact. Based on staff's analysis, the Commission anticipates a possible significant economic impact for one small domestic importer and two small domestic manufacturers that supply crib mattress products to the U.S. market.

B. Final Rule Objectives, Legal Basis, Product Description, and Market

The objective of the final rule is to reduce the risk of injury and death associated with full-size crib mattresses, non-full-size crib mattresses, and after-market mattresses for play yards and non-full-size cribs (collectively referred to as ''crib mattresses''). A detailed analysis of the objectives and statutory basis for the rule are set forth in section I of the preamble. Section II.A of this preamble describes the products subject to this final rule, section II.B describes the market for crib mattresses, and section II.C describes consumer use of crib mattresses.

C. Small Entities To Which the Draft Proposed Rule Would Apply

Manufacturers of crib mattresses are typically categorized under the NAICS category 337910 (Mattress Manufacturing). The Small Business Administration (SBA) guidelines consider mattress manufacturing establishments to be small if they have fewer than 1,000 employees.[81] Importers of crib mattresses are typically categorized under NAICS code 423210 (Furniture Merchant Wholesalers) and SBA guidelines would consider them small if they have fewer than 100 employees.

Staff estimates that approximately 32 domestic firms supply crib mattresses to the U.S. market. Following SBA size guidelines, 27 are small firms—14 domestic manufacturers and 13 domestic importers. The five remaining domestic firms are large manufacturers. The expected impact of the draft final rule on small manufacturers and importers of crib mattresses will differ based on whether their crib mattresses are already compliant with ASTM F2933–21, the size-type of crib mattress the firm supplies to the market, and the materials used in the crib mattresses.

[80] *See* Tab E of Staff's Final Rule Briefing Package for additional information on the RFA.

[81] The size guidelines are established by the SBA.

Staff estimates that approximately 75 percent of crib mattresses on the market are full-size crib mattresses; approximately 40 percent of full-size crib mattresses are coil/innerspring mattresses; and the remaining majority are foam-core mattresses.[82] Staff identified at least 15 small firms that only produce foam-core mattresses, while many small entities produce a combination of both coil and foam-core crib mattresses.

Section VIII of this preamble describes the requirements of the final rule. Firms whose crib mattresses do not already comply with the rule will need to evaluate their products, determine what changes would be required to meet the standard, and decide how to proceed. Noncompliant products would need to be removed from the U.S. market, modified to meet the mandatory standard, or remarketed for purposes other than use as crib mattresses. New crib mattress products introduced to the market would also need to comply with the standard.

Crib mattresses will be subject to the third party testing and certification requirements under the CPSA, as codified in 16 CFR part 1107 (children's product testing rule) and 16 CFR part 1110 (certificate rule), which require that manufacturers and importers certify that their products comply with the applicable children's product safety standards, based on third party testing, and subject their products to third party testing periodically. Third party testing costs are in addition to the costs of modifying the crib mattresses to meet the standard. For crib mattresses, the third party testing costs are expected to be about $950 per testing cycle per model. This is an increase in the costs as estimated in the IRFA in the 2020 NPR, which estimated a cost of $325 per sample.

D. Impact of Draft Proposed Rule on Small Manufacturers and Importers

Of the 27 small manufacturers and importers identified by staff, 14 (9 manufacturers and 5 importers) are members of the JPMA, but staff cannot determine how many crib mattresses are currently certified to ASTM F2933–21. Many of the firms that would be subject to the final rule are known to produce a variety of children's products that are already subject to a children's product safety rule, and therefore, are familiar with such requirements.[83] Additionally, two firms that are not known to be JPMA members, are members of ASTM.

As required by section 14 of the CPSA and its implementing regulations, manufacturers and importers of crib mattresses would be required to certify that their crib mattresses comply with the requirements of the draft final rule, based on the results of third party testing by a CPSC-accepted third party conformity assessment body (*i.e.,* testing laboratory). However, crib mattresses are also already subject to third party testing requirements, and therefore, firms that supply crib mattresses to the U.S. market are already familiar with third party testing requirements.[84] [85] Crib mattresses must already comply with two federal mattress flammability standards: 16 CFR parts 1632 and 1633. Firms that supply crib mattresses that are designed or intended primarily for children age 12 or under need to prepare a Children's Product Certification (CPC) that references parts 1632 and/or part 1633, when applicable. At this time, CPSC staff is not aware of any small domestic firms that supply crib mattresses to the U.S. market that are not compliant with CPSC's mattress flammability standards. Additionally, crib mattresses are subject to lead testing, unless exempt, phthalate testing for certain child care articles, and small parts testing and small parts labeling, as applicable. The final rule will augment these existing requirements.

As part of the 2020 NPR, the Commission requested comments from small firms on the number of crib mattress models they would typically certify to the ASTM standard annually. However, the Commission did not receive any comments on the request. Some small manufacturers and importers of crib mattresses to the U.S. market would not be subject to all the tests proposed in the final rule, because the firm may only supply foam-core and/or non-full-size crib mattress products to the market.

1. Costs Associated With Modifying Products

The majority of crib mattresses tested by staff already meet the performance requirements of the final rule, and they will not require any modification to comply. Although we do not know the exact costs of modifying crib mattresses to comply with the final rule, we do know that such costs would vary by product model. During the public comment period, CPSC did not receive any comments related to one-time costs of redesigning a product to meet the standard, as proposed. Nonetheless, it is possible that some manufacturers of noncomplying mattresses might choose to drop the model, rather than incur the expense associated with modifying it.[86] Therefore, a possibility exists that the final rule could result in the removal of one or more crib mattress models from commerce.

Changes to marking and labeling will be necessary on crib mattress products. Generally, costs associated marking and labeling, as well as providing instructional materials, are low on a per-unit basis. Many crib mattress suppliers already provide instructions with their crib products, but firms will need to ensure that the content and formatting of the instructions required for crib mattresses meet the requirements of the draft final rule.[87] Likewise, the cost of warning labels is generally low, especially if some warning labels are already present, and the product does not need to be modified to accommodate new labels.

2. Third Party Testing Costs

The final rule will require all manufacturers and importers of crib mattresses to meet additional third party testing requirements under section 14 of the CPSA. As allowed by the component part testing rule (16 CFR 1109), importers can rely upon third party tests obtained by their suppliers, which could reduce the impact on importers. In addition, businesses selling products covered by this rule were already required to certify compliance to general children's product rules for lead, phthalates, and small parts with third party testing. Accordingly, those third party testing costs would not be considered new costs of compliance with this rule.

[82] Based on staff's compiled search results of data available on the internet, April–June 2021.

[83] Crib mattresses listed for sale on a variety of online retail websites often include product descriptions indicating that the crib mattress product meets CPSC general safety standards, while not referencing any one specific CPSC safety standard.

[84] Manufacturers and importers of children's products must certify compliance with applicable federal safety requirements in a Children's Product Certificate (CPC). Testing by a third party CPSC-Accepted Laboratory must serve as the basis for the production of the CPC.

[85] Mattresses intended for children must be tested at a third-party test laboratory or a fire-walled internal laboratory: *https://cpsc.gov/s3fs-public/pdfs/blk_media_mattress.pdf.* In either case, the lab would need to be CPSC-accepted to test to the standards since crib mattresses are considered to be primarily intended for children 12 and under.

[86] Costs associated with modification of a crib mattress might include, but are not limited to, costs of skilled labor for the modification or redesign; costs associated with finding and changing to a new materials supplier, if necessary; flammability testing costs for the modified model if new ticking materials are used; and additional testing costs prescribed in ASTM F2933 and those of the final rule.

[87] Instructions required shall be provided with the mattress and shall be easy to read and understand, and shall be in the English language, at a minimum. These instructions shall include information on assembly, maintenance, cleaning, and use, where applicable.

Although CPSC did not receive any comments on the NPR cost estimates provided in the IRFA, ongoing discussions with suppliers through ASTM indicate third party testing bodies will need to develop protocols for the testing proposed in the draft final rule, as well as establish prices for the prescribed testing. Based on information from a testing laboratory, the cost of testing to the current version of ASTM F2933 is $200 to $250 per sample. However, the cost of testing varies, based on the type of crib mattress and the number of samples tested. Furthermore, testing rates may have changed by accredited labs. According to new information provided by one crib mattress supplier, the price charged to test to ASTM F2933 for suppliers with very few models may be as high as $400 per model tested.[88] Costs for additional testing required by the final rule could increase the cost of testing substantially, although not all crib mattresses would be subject to all of the testing requirements.

Staff estimates that for a manufacturer or importer with 10 crib mattress models that require only one test per model to provide a high degree of assurance, the full cost of third party testing will be approximately $4,000, plus $2,000 in costs for compression testing, plus $1,000 for the cost of possible cyclic load testing, plus $2,500 for required firmness testing, for a total of $9,500 in third party testing costs or an average of $950 per model.[89]

3. Summary of Impacts

Generally, based on SBA guidelines, CPSC considers impacts that exceed 1 percent of a firm's revenue to be *potentially* significant. The lowest reported annual revenue for any small domestic firm producing crib mattress models was $1.07 million. One percent of annual revenue for the firm is $10,700 ($1,070,000 × 0.01). Consequently, if the costs of modifying their mattresses to comply with the standard exceeds $10,700, the rule should be considered to have a significant impact for the firm. This would include the costs of modifying noncompliant mattresses to comply with the requirements, the loss of revenue that results from removing noncompliant mattresses from their product line, and the cost of third party testing. For manufacturers or importers with greater revenue, the impact of the draft proposed rule would have to be higher than this for the impact to be considered significant.

Given that a substantial number of crib mattresses already comply with the requirements of the final rule and some of the testing costs are already being borne by firms that certify to the current voluntary standard, it seems unlikely that the rule would have a significant impact on a substantial number of small entities. Furthermore, CPSC did not receive any public comments on the costs of the proposed rule, or impediments to modifying existing crib mattress products to conform to the rule, especially those that would result in the removal of the mattress product from the market. Likewise, CPSC did not receive any other comments on possible impacts the rule might have on small domestic manufacturers or importers. Nevertheless, to the extent that a crib mattress supplier would need to remove a crib mattress model from commerce because it will not meet the standards of the draft final rule, or the product cannot be modified in a cost-efficient manner, a few small firms could potentially consider the costs of adopting the final rule to be significant. Based on limited data available for small private firms serving this market, staff identified three small domestic firms—two small domestic manufacturers and one small domestic importer who might consider the impact significant and might drop one or more crib mattress models from their line.

E. Other Federal Rules That May Duplicate, Overlap, or Conflict With the Final Rule

CPSC staff has not identified any other federal rules that duplicate, overlap, or conflict with the final rule.

F. Alternatives Considered To Reduce the Impact on Small Entities

CPSC attempted to minimize the impact of the final rule on small entities as discussed below:

1. Requesting Public Comments

CPSC published an NPR in the **Federal Register** on October 26, 2020 (85 FR 67906) and requested comments on any alternatives to the proposed rule that could reduce the burden on small entities. Among others, these proposed alternatives included adopting the ASTM standard, without modification, and delaying the effective date of the requirements. None of the comments CPSC received mentioned a burden or impact on small entities, nor expressed any concern that the final rule might impose on small entities. Additionally, CPSC did not receive comments raising significant issues in response to the IRFA. CPSC did not receive any comments from the SBA.

2. Delay the Effective Date of the Requirements

The APA generally requires that the effective date of the rule be at least 30 days after publication of the final rule. 5 U.S.C. 553(d). CPSC generally considers 6 months to be sufficient time for suppliers of durable infant or toddler products to come into compliance with a new standard under section 104 of the CPSIA. Six months is also the period that JPMA typically allows for products in the JPMA certification program to transition to a new standard once that standard is published. The NPR proposed a 6-month effective date after publication of the final rule, for products manufactured or imported on or after that date. Commenters both supported and opposed the 6-month effective date. Some commenters urged the effective date to be as soon as possible, indicating that additional time for the rule to become effective would put infants at risk. Other commenters requested an indefinite delay of the rulemakings, until ASTM completes changes and updates to the voluntary standard, and those associated with crib mattresses.

For the final rule, the Commission will retain the proposed 6-month effective date for the final rule, because suppliers have had lead time to prepare for this rule since the NPR was published on October 26, 2020. Many crib mattresses within the scope of the final rule require no change in design to achieve compliance with the final rule. Furthermore, 6 months from the change in a voluntary standard is the time frame that JPMA uses for its certification program. Consequently, compliant manufacturers are accustomed to this time frame to comply with a modified standard.

Because some manufacturers of crib mattresses may experience some kind of economic impact as a result of the final rule, providing a 6-month effective date should mitigate the effects of the rule on small businesses. A 6-month effective date will provide manufacturers and importers time to spread the impact of the rule over a 6-month period, to reduce any sudden economic impact of the draft final rule. For businesses that would choose to exit the crib mattress market, or discontinue certain crib mattress models currently in production (rather than produce conforming products), such a delay might provide them with time to adjust marketing

[88] Information provided by the crib mattress supplier included quotes received from two prominent testing laboratories.

[89] The estimated costs of $950 per model for testing in the FRFA is an increase over the amount estimated in the IFRA. The cost for third party testing was estimated to be $250 to $325, per sample, in the IRFA.

towards other product offerings, sell inventory, or consider alternative business opportunities.

3. Consultation With ASTM

CPSC staff has worked extensively with ASTM in the continued development and improvement of voluntary safety standards for crib mattresses referenced in the final rule. Members of ASTM include small domestic manufacturers and importers of products to which the draft final rule would apply. Small entities to whom the final rule will apply have taken part in discussions and engaged in product testing during the development of the standard. Feedback from these entities was considered by ASTM and CPSC in developing the revised voluntary standard and final rule, respectively.

XIV. Environmental Considerations

The Commission's regulations address whether the agency is required to prepare an environmental assessment or an environmental impact statement. Under these regulations, certain categories of CPSC actions normally have ''little or no potential for affecting the human environment,'' and therefore, they do not require an environmental assessment or an environmental impact statement. Safety standards providing requirements for products come under this categorical exclusion. 16 CFR 1021.5(c)(1). The final rule for crib mattresses falls within the categorical exclusion.

XV. Paperwork Reduction Act

This final rule for crib mattresses contains information collection requirements that are subject to public comment and review by the Office of Management and Budget (''OMB'') under the Paperwork Reduction Act of 1995 (44 U.S.C. 3501–3521). In this document, pursuant to 44 U.S.C. 3507(a)(1)(D), we set forth:

- A title for the collection of information;
- a summary of the collection of information;
- a brief description of the need for the information, and the proposed use of the information;
- a description of the likely respondents and proposed frequency of response to the collection of information;
- an estimate of the burden that shall result from the collection of information; and
- notice that comments may be submitted to the OMB.

The preamble to the NPR (85 FR 67927–28) discussed the information collection burden of the proposed rule and specifically requested comments on the accuracy of our estimates. The OMB assigned control number 3041–0185 for this information collection. We did not receive any comment regarding the information collection burden of the proposal in the NPR. For the final rule, we update the estimated number of crib mattress manufacturers, from 26 to 28, and the estimated average number of models per manufacturer, from 12 to 10, which alters the estimated total burden, as described below. In accordance with PRA requirements, the Commission provides the following information:

Title: Safety Standard for Crib Mattresses.

Description: The final rule requires each crib mattress within the scope of the rule to comply with ASTM F2933–21, *Standard Consumer Safety Specification for Crib Mattresses,* including the additional requirements summarized in section VIII of this preamble. Section 7 of ASTM F2933–21, and a new section 8 in the final rule, contain requirements for marking, labeling, and instructional literature. These requirements fall within the definition of ''collection of information,'' as defined in 44 U.S.C. 3502(3).

Description of Respondents: Persons who manufacture or import crib mattresses.

Estimated Burden: We estimate the burden of this collection of information as follows:

TABLE 8—ESTIMATED ANNUAL REPORTING BURDEN

16 CFR section	Number of respondents	Frequency of responses	Total annual responses	Hours per response	Total burden hours
1241.2(a), (b)	38	10	380	1	380

Our estimate is based on the following:

The Commission is finalizing the proposal in the NPR to modify several sections of the voluntary standard for crib mattresses, ASTM F2933, but is now making these modifications to the newly revised ASTM F2933–21. As proposed, the Commission is modifying section 7 of ASTM F2933 and adding a new section 8 on instructional literature, to bring the standard into alignment with other safety standards for durable infant or toddler products. For example, in addition to improved warning format and content, modifications to section 7.1.1 of ASTM F2933–21 will require that the name and the place of business (city, state, and mailing address, including zip code) or telephone number of the manufacturer, distributor, or seller be marked clearly and legibly on each product and its retail package. Modifications to section 7.1.2 of ASTM F2933 also require a code mark or other means that identifies the date (month and year, as a minimum) of manufacture. Modifications to section 7.2 of ASTM F2933 require marking and labeling on the product to be permanent.

For the final rule, we update the number of known entities supplying crib mattresses in the U.S. market from 26 to 38. To comply with the final rule, these entities may need to make some modifications to existing product labels. We estimate that the time required to make these modifications is about 1 hour per model. Based on an evaluation of supplier product lines, for the final rule, we have also revised the average number of crib mattress models for each manufacturer from 12 to 10.[90] The revised estimated burden associated with labels for the final rule is 1 hour per model × 38 entities × 10 models per entity = 380 hours. The updated estimate of the hourly compensation for the time required to create and update labels is $33.78 (U.S. Bureau of Labor Statistics, ''Employer Costs for Employee Compensation,'' March 2021, total compensation for all sales and office workers in goods-producing private industries: *http://www.bls.gov/ncs/*). Therefore, for the final rule, our estimated annual cost to industry associated with the labeling requirements is $12,836.40 ($33.78 per hour × 380 hours = $12,836.40). No operating, maintenance, or capital costs are associated with the collection.

[90] This number was derived during the market research phase of the initial regulatory flexibility analysis by dividing the total number of crib mattresses supplied by all crib mattress suppliers by the total number of crib mattress suppliers.

As proposed, the final rule also adds a new section 8 that requires instructions to be supplied with the crib mattress. The instructions are required to: (a) Be easy to read and understand; (b) include information regarding assembly, maintenance, cleaning, and use, where applicable; and (c) address the same warning and safety-related statements that must appear on the product, with similar formatting requirements, but without the need to be in color. Under the OMB's regulations (5 CFR 1320.3(b)(2)), the time, effort, and financial resources necessary to comply with a collection of information that would be incurred by persons in the ''normal course of their activities'' are excluded from a burden estimate, where an agency demonstrates that the disclosure activities required to comply are ''usual and customary.'' Based on staff's review of product information online, approximately 76 percent of firms that supply cribs to the crib mattress market already provide instructional literature to consumers for products intended for use by children. All of the firms that supply crib mattresses already provide customer support for use of their children's products. Therefore, we estimate that no burden hours are associated with the addition of section 8 to ASTM F2933–21 in the final rule, because any burden associated with supplying instructions with crib mattresses are ''usual and customary'' and not within the definition of ''burden'' under the OMB's regulations.

Based on this analysis, the mandatory standard for crib mattresses will impose a burden to industry of 380 hours at a cost of $12,836.40 annually. In compliance with the Paperwork Reduction Act of 1995 (44 U.S.C. 3507(d)), we have submitted the information collection requirements of this final rule to the OMB.

XVI. Preemption

Section 26(a) of the CPSA, 15 U.S.C. 2075(a), states that when a consumer product safety standard is in effect and applies to a product, no state or political subdivision of a state may either establish or continue in effect a standard or regulation that prescribes requirements for the performance, composition, contents, design, finish, construction, packaging, or labeling of such product dealing with the same risk of injury unless the state requirement is identical to the federal standard. Section 26(c) of the CPSA also provides that states or political subdivisions of states may apply to the Commission for an exemption from this preemption under certain circumstances. Section 104(b) of the CPSIA refers to the rules to be issued under that section as ''consumer product safety rules.'' Therefore, once this final rule for crib mattresses issued under section 104 of the CPSIA takes effect, the rule will preempt in accordance with section 26(a) of the CPSA.

XVII. Congressional Review Act

The Congressional Review Act (CRA; 5 U.S.C. 801 through 808) states that, before a rule may take effect, the agency issuing the rule must submit the rule, and certain related information, to each House of Congress and the Comptroller General. 5 U.S.C. 801(a)(1). The submission must indicate whether the rule is a ''major rule.'' The CRA states that the Office of Information and Regulatory Affairs (''OIRA'') determines whether a rule qualifies as a ''major rule.'' Pursuant to the CRA, OIRA designated this rule as not a ''major rule,'' as defined in 5 U.S.C. 804(2). A ''major rule'' is one that the Administrator of OIRA finds has resulted in, or is likely to result in: (A) An annual effect on the economy of $100,000,000 or more; (B) a major increase in costs or prices for consumers, individual industries, federal, state, or local government agencies, or geographic regions; or (C) a significant adverse effects on competition, employment, investment, productivity, innovation, or on the ability of United States-based enterprises to compete with foreign-based enterprises in domestic and export markets. 5 U.S.C. 804(2). To comply with the CRA, CPSC will submit the required information to each House of Congress and the Comptroller General.

List of Subjects

16 CFR Part 1112

Administrative practice and procedure, Audit, Consumer protection, Reporting and recordkeeping requirements, Third party conformity assessment body.

16 CFR Part 1130

Administrative practice and procedure, Business and industry, Consumer protection, Reporting and recordkeeping requirements.

16 CFR Part 1241

Consumer protection, Imports, Incorporation by reference, Infants and children, Labeling, Law enforcement, and Mattresses.

For the reasons discussed in the preamble, the Commission amends Title 16 of the Code of Federal Regulations as follows:

PART 1112—REQUIREMENTS PERTAINING TO THIRD PARTY CONFORMITY ASSESSMENT BODIES

■ 1. The authority citation for part 1112 continues to read as follows:

Authority: 15 U.S.C. 2063; Pub. L. 110–314, section 3, 122 Stat. 3016, 3017 (2008).

■ 2. Amend § 1112.15 by adding paragraph (b)(50) to read as follows:

§ 1112.15 When can a third party conformity assessment body apply for CPSC acceptance for a particular CPSC rule and/or test method?

* * * * *

(b) * * *

(50) 16 CFR part 1241, Safety Standard for Crib Mattresses.

* * * * *

PART 1130—REQUIREMENTS FOR CONSUMER REGISTRATION OF DURABLE INFANT OR TODDLER PRODUCTS

■ 3. The authority citation for part 1130 continues to read as follows:

Authority: 15 U.S.C. 2056a, 2056(b).

■ 4. Amend § 1130.2 by revising paragraphs (a)(16) and (a)(17), and adding paragraph (a)(18) to read as follows:

§ 1130.2 Definitions.

* * * * *

(a) * * *

(16) Infant bathtubs;

(17) Bed rails; and

(18) Crib mattresses.

* * * * *

■ 5. Add part 1241 to read as follows:

PART 1241—SAFETY STANDARD FOR CRIB MATTRESSES

Sec.
1241.1 Scope.
1241.2 Requirements for crib mattresses.

Authority: Sec. 104, Pub. L. 110–314, 122 Stat. 3016 (15 U.S.C. 2056a); Sec. 3, Pub. L. 112–28, 125 Stat. 273.

§ 1241.1 Scope.

This part establishes a consumer product safety standard for crib mattresses. The scope of this standard for crib mattresses includes all crib mattresses within the scope of ASTM F2933, *Standard Consumer Safety Specification for Crib Mattresses,* including: Full-size crib mattresses, non-full-size crib mattresses, and after-market mattresses for play yards and non-full-size cribs.

§ 1241.2 Requirements for crib mattresses.

(a) Except as provided in paragraph (b) of this section, each crib mattress must comply with all applicable provisions of ASTM F2933–21, Standard Consumer Safety Specification for Crib Mattresses (approved on June 15, 2021). The Director of the Federal Register approves this incorporation by reference in accordance with 5 U.S.C. 552(a) and 1 CFR part 51. You may obtain a copy from ASTM International, 100 Bar Harbor Drive, P.O. Box 0700, West Conshohocken, PA 19428; *http://www.astm.org/cpsc.htm.* Once incorporated by reference, you may review a read-only copy of ASTM F2933–21 at *http://www.astm.org/READINGROOM/.* You may also inspect a copy at the Division of the Secretariat, U.S. Consumer Product Safety Commission, Room 820, 4330 East-West Highway, Bethesda, MD 20814, telephone 301–504–7923, or at the National Archives and Records Administration (NARA). For information on the availability of this material at NARA, email *fr.inspection@nara.gov,* or go to: *https://www.archives.gov/federal-register/cfr/ibr-locations.html.*

(b) Comply with ASTM F2933–21 with the following additions or exclusions:

(1) Instead of complying with section 3.1.2 of ASTM F2933–21, comply with the following:

(i) 3.1.2 *conspicuous, adj*—visible when the mattress is being handled by a consumer placing the mattress in its intended use position in a product.

(ii) [Reserved]

(2) Add the following paragraph to section 3.1 of ASTM F2933–21:

(i) 3.1.11 *sleep surface, n*—The product component, or group of components, providing the horizontal plane, or nearly horizontal plane (≤10°), intended to support an infant during sleep.

(ii) [Reserved]

(3) Instead of complying with section 5.7.1.1 of ASTM F2933–21, comply with the following:

(i) 5.7.1.1 *Mattress Size*—The dimensions of a full-size crib mattress shall measure at least 27¼ in. (690 mm) wide and 51⅝ in. (1310 mm) long. When the mattress with the test mattress sheet is placed against the perimeter and in the corner of the crib, the corner gap shall not exceed 3.15 in. (80.0 mm). Dimensions shall be tested in accordance with 6.2.

(ii) [Reserved]

(4) Instead of complying with section 5.7.2 through 5.7.2.2 of ASTM F2933–21, comply with the following:

(i) 5.7.2 *Non-Full-Size Crib Mattresses*—For the purposes of this section, the term product refers to a non-full-size crib.

(ii) 5.7.2.1 *Mattress supplied with a non-full-size crib:* Shall meet the specifications of *Stability; Cord/Strap Length; Mattresses for Rigid sided products;* and *Crib Side Height* of 16 CFR part 1220, Safety Standard for Non-Full-Size Baby Cribs, when tested with the product with which it is supplied.

(iii) 5.7.2.2 *After-market mattresses for non-full-size cribs:* Shall be treated as though the mattresses were ''the mattress supplied with a non-full-size crib'' and shall meet the specifications of *Stability; Cord/Strap Length; Mattresses for Rigid sided products;* and *Crib Side Height* in 16 CFR part 1220, Safety Standard for Non-Full-Size Baby Cribs, when tested to the equivalent interior dimension of the product for which it is intended to be used.

(iv) 5.7.2.3 The after-market mattress must be at least the same size as the original equipment mattress or larger and lay flat on the floor of the product, in contact with the product mattress support structure.

(v) 5.7.2.4 If the original equipment mattress includes a floor support structure, the after-market mattress must include a floor support structure that is at least as thick as the original equipment mattress floor support structure.

(vi) 5.7.2.5 If the original equipment mattress includes storage accommodations for the product instruction manual, the after-market mattress shall provide equivalent storage accommodations for the product instruction manual.

(5) Instead of complying with section 5.9 through 5.9.1.2 of ASTM F2933–21, comply with the following:

(i) 5.9 *After-Market Mattress for Play Yard*—For the purposes of this section, the term ''product'' refers to a play yard.

(ii) 5.9.1 *For Mesh/Fabric Sided Play Yard Products:*

(iii) 5.9.1.1 The after-market mattress and product it is tested in shall meet the applicable requirements of the following sections of 16 CFR part 1221, Safety Standard for Play Yards, when tested with each brand and model of product for which it is intended to replace the mattress: *Stability; Cord/Strap Length; Mattress; Height of Sides; Floor Strength; Mattress Vertical Displacement.*

(iv) 5.9.1.2 If the aftermarket mattress is intended to be used in the bassinet of a play yard with a bassinet attachment, the mattress shall also meet the specifications of the following sections of 16 CFR part 1218, Safety Standard for Bassinets and Cradles, when tested with each brand and model for which it is intended to replace the mattress: *Pad Thickness for Fabric or Mesh Sided Products; Pad dimensions; Side Height; Bassinets with Segmented Mattresses.* This section applies only to a play yard mattress that is interchangeably used as a play yard mattress and as a bassinet mattress/pad.

(6) Add the following paragraphs to section 5 of ASTM F2933–21:

(i) 5.10 Mattress Firmness.

(ii) 5.10.1 All crib mattresses within the scope of this standard, when tested in accordance with 6.3, the feeler arm shall not contact the sleep surface of the crib mattress.

(iii) 5.11 Coil Springs. The requirements in this section only pertain to crib mattresses with coil springs.

(iv) 5.11.1 When tested in accordance with 6.4, there shall be no exposed coil springs or metal wires.

(7) Renumber section 6.2.2 of ASTM F2933–21 to section 6.2.3.

(8) Renumber section 6.2.2.1 of ASTM F2933–21 to section 6.2.3.1.

(9) Renumber section 6.2.2.2 of ASTM F2933–21 to section 6.2.3.2.

(10) Renumber section 6.2.2.3 of ASTM F2933–21 to section 6.2.3.3.

(11) Renumber section 6.2.2.4 of ASTM F2933021 to section 6.2.3.4.

(12) Add the following paragraphs to section 6.2.3 of ASTM F2933021:

(i) 6.2.3.5 The test mattress sheet shall be placed on the mattress such that each sheet edge is wrapped fully around and under the mattress.

(ii) 6.2.3.6 Repeat step 6.2.3.2. Then measure the shortest gap between the mattress and the projected crib corner after the dimensions of the mattress have been recorded. The projected crib corner is located 53 in. ± ⅛ in. (1346 mm ± 3.2 mm) from Wall C and 28⅝ in. ± ⅛ in. (727 mm ± 3.2 mm) from Wall D, as shown in Fig. 2. The mattress shall not be moved during measurement. This shall be the corner gap measurement.

(iii) 6.2.3.7 Rotate the mattress 180° such that the opposing corner is adjacent to Walls C and D, then repeat 6.2.3.6.

(13) Instead of complying with section 6.2.2 of ASTM F2933–21, comply with the following:

(i) 6.2.2 *Test Equipment-Mattress Sheet:*

(ii) 6.2.2.1 The mattress sheet shall be 100% cotton and fitted for the mattress to be tested.

(iii) 6.2.2.2 The mattress sheet shall be washed in hot water (50 °C [122 °F] or higher) and dried a minimum of two times on the highest setting using household textile laundering units. This shall be the test mattress sheet.

(14) Add the following paragraphs as section 6.3 of ASTM F2933–21.

(i) 6.3 Mattress Firmness.

(ii) 6.3.1 *Test Fixture:*

(iii) 6.3.1.1 The fixture, as shown in Fig. 3, shall be a rigid, robust object with a round footprint of diameter 203 mm ± 1 mm, and an overall mass of 5200 g ± 20 g. The lower edge of the fixture shall have a radius not larger than 1 mm. Overhanging the footprint by 40 mm ± 2 mm shall be a flexible, flat bar of width 12 mm ± 0.2 mm with square-cut ends. This bar may be fashioned from a shortened hacksaw blade. The bar shall rest parallel to the bottom surface of the fixture and shall be positioned at a height of 15 mm ± 0.2 mm above the bottom surface of the fixture. The bar shall lay directly over a radial axis of the footprint (*i.e.,* such that a longitudinal centerline of the bar would pass over the center of the footprint).

(iv) 6.3.1.2 Included on the fixture, but not overhanging the footprint, shall be a linear level that is positioned on a plane parallel to the bar, and in a direction parallel to the bar.

(v) 6.3.1.3 Other parts of the fixture, including any handle arrangement and any clamping arrangement for the bar, shall not comprise more that 30% of the total mass of the fixture, and shall be mounted as concentric and as low as possible.

(vi) 6.3.2 *Test Method:*

(vii) 6.3.2.1 Mattresses that are supplied with a product shall be tested when positioned on that product. Mattresses sold independent of a product, shall be tested on a flat, rigid, horizontal support. After-market mattresses for play yards and non-full-size cribs shall be tested with each brand and model of product it is intended to replace.

(viii) 6.3.2.2 Where a user of a mattress could possibly position either side face up, even if this is not an intended use, then both sides of the mattress shall be tested.

(ix) 6.3.2.3 Before testing each mattress, the following steps shall be followed:

(A) Verify there is no excess moisture in the mattress, beyond reasonable laboratory humidity levels.

(B) Allow sufficient time per the manufacturer's instructions to fully inflate, if shipped in a vacuum sealed package.

(C) Shake and or agitate the mattress in order to fully aerate and distribute all internal components evenly.

(D) Place the mattress in the manufacturer's recommended use position if there is one, in the supplied product, or on a flat, rigid, horizontal support.

(E) Let the mattress rest for at least 5 minutes.

(F) Mark a longitudinal centerline on the mattress sleep surface, and divide this line in half. This point will be the first test location. Then further divide the two lines on either side of the first test location into halves. These will be the second and third test locations.

(x) 6.3.2.4. Position the test fixture on each of the test locations, with the footprint of the fixture centered on the location, with the bar extending over the centerline and always pointing at the same end of the mattress sleep surface.

(A) At each test location in turn, rotate the bar to point in the required direction, and gently set the fixture down on the mattress sleep surface, ensuring that the footprint of the fixture does not extend beyond the edge of the mattress. The fixture shall be placed as horizontal as possible, using the level to verify. If the bar makes contact with the top of the mattress sleep surface, even slightly, the mattress is considered to have failed the test.

(B) Repeat Step (A) at the remaining locations identified in 6.3.2.3(F).

(C) Repeat Step (A) at a location away from the centerline most likely to fail (*e.g.* a very soft spot on the sleep surface or at a raised portion of the sleep surface). In the case of testing a raised portion of a sleep surface, position center of the fixture such that the bar is over the raised portion, to simulate the position of an infant's nose.

(D) In the event that the fixture is not resting in a nearly horizontal orientation, repeat the test procedure at that location by beginning again from paragraph (b)(14)(x)(A). However, if the test produces a fail even with the device tilted back away from the bar so as to raise it, then a fail can be recorded.

(15) Add the following paragraphs as section 6.4 of ASTM F2933–21:

(i) 6.4 Coil Spring Test.

(ii) 6.4.1 General—This test consists of dropping a specified weight repeatedly onto the mattress. The test assists in evaluating the structural integrity of a mattress with coil springs.

(iii) 6.4.2 Test Fixture:

(iv) 6.4.2.1 A guided free-fall impacting system machine (which keeps the upper surface of the impact mass parallel to the horizontal surface on which the crib is secured) (See Fig. 4).

(v) 6.4.2.2 A 30-lb (13.6-kg) impact mass (see Fig. 5 and Fig. 6).

(vi) 6.4.2.3 A 6-in. (150-mm) long gauge.

(vii) 6.4.2.4 An enclosed frame measuring 29 inches by 53 inches (737 mm by 1346 mm) for the purpose of restricting mattress movement. When testing full-size mattresses, a full-size crib meeting the requirements of ASTM F1169–19 would suffice.

(viii) 6.4.2.5 A ¾″ piece of plywood or oriented strand board (OSB) that is rigidly supported along the perimeter.

(ix) 6.4.3 *Test Method:*

(x) 6.4.3.1 Place the mattress on the wooden support and inside the enclosed frame.

(xi) 6.4.3.2 Position geometric center of the impact mass above the geometric center of the test mattress.

(xii) 6.4.3.3 Adjust the distance between the top surface of the mattress and bottom surface of the impact mass to 6 in. (150 mm) (using the 6-in. (150-mm) long gauge, per 6.4.2.3) when the impact mass is in its highest position. Lock the impactor mechanism at this height and do not adjust the height during impacting to compensate for any change in distance as a result of the mattress compressing or the mattress support deforming or moving during impacting.

(xiii) 6.4.3.4 Allow the 30-lb (13.6-kg) impact mass to fall freely 250 times at the rate of one impact every 4 s. Load retraction shall not begin until at least 2 s after the start of the drop.

(xiv) 6.4.3.5 Repeat the step described in 6.4.3.4 at the other test locations shown in Fig. 7.

(xv) 6.4.4 The coil spring test shall be repeated on each surface of the mattress. The test shall not be repeated using a mattress that has been previously tested with the coil spring test.

(16) Add the following Figures to section 6 of ASTM F2933–21:

(i) Figure 2.

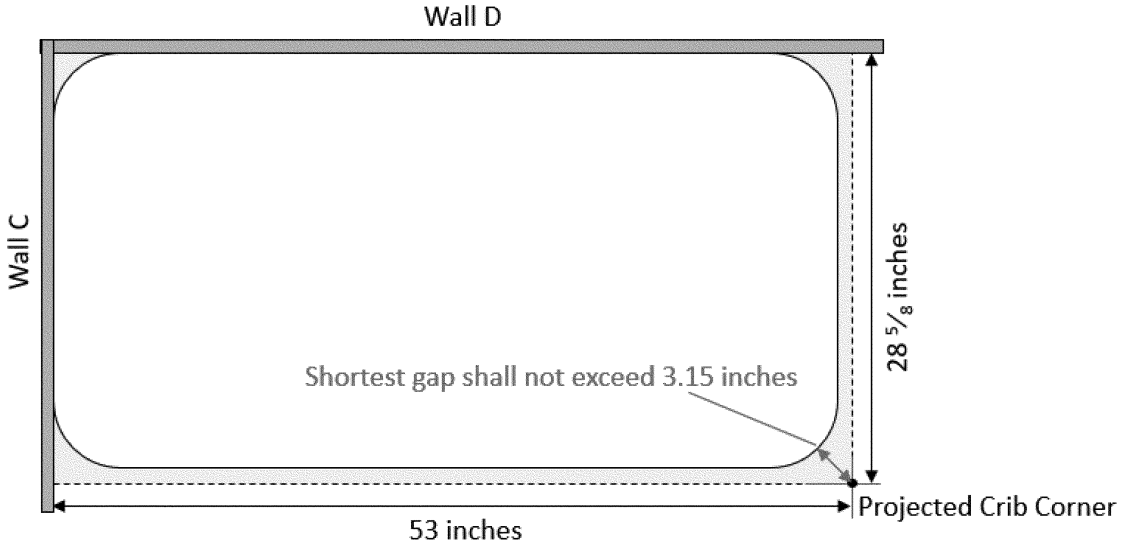

Figure 2. Projected crib corner and corner gap measurement location

(ii) Figure 3.

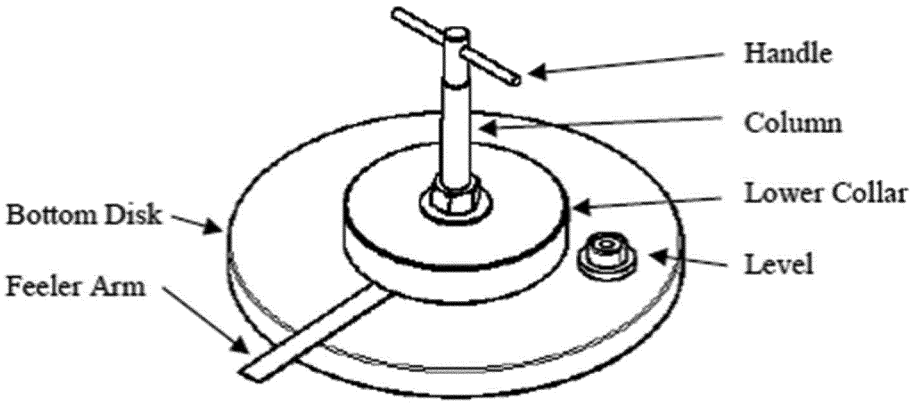

Figure 3. Mattress Firmness Test Fixture

(iii) Figure 4.[91]

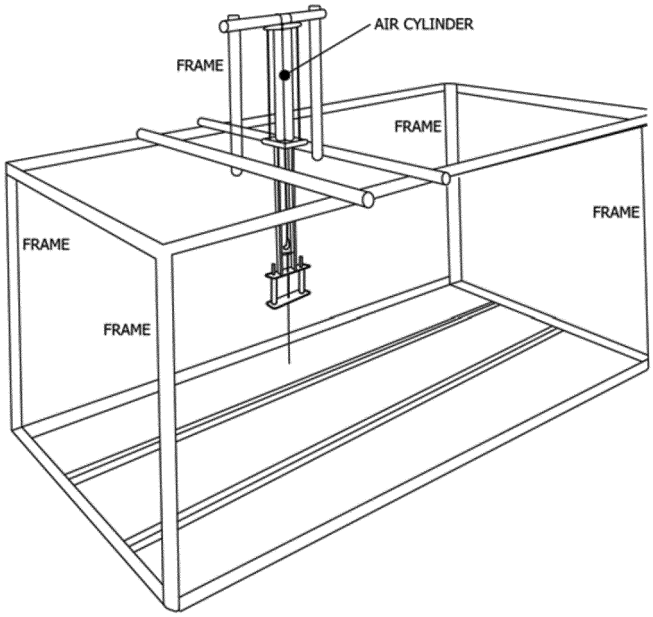

Figure 4. Typical free fall impacting system[91]

(iv) Figure 5.

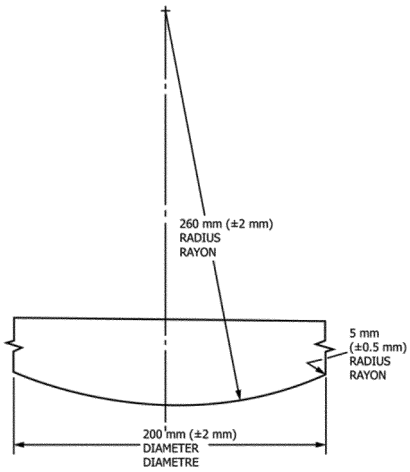

Figure 5. Profile of Impact mass[90]

[91] Reprinted, with permission, from ASTM F1169–19 Standard Consumer Safety Specification for Full-Size Baby Cribs, copyright ASTM International, 100 Barr Harbor Drive, West Conshohocken, PA 19428. A copy of the complete standard may be obtained from ASTM International, *www.astm.org.*

(v) Figure 6.

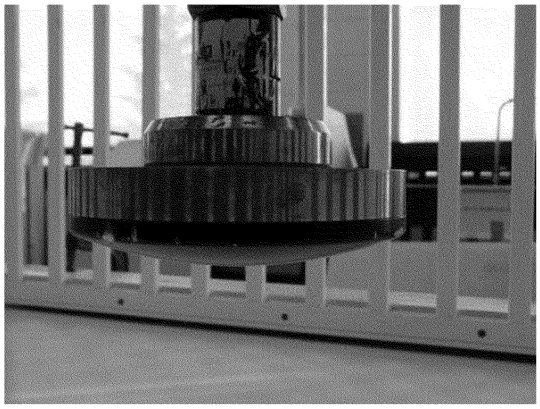

Figure 6. Photo of typical impact mass[90]

(vi) Figure 7.

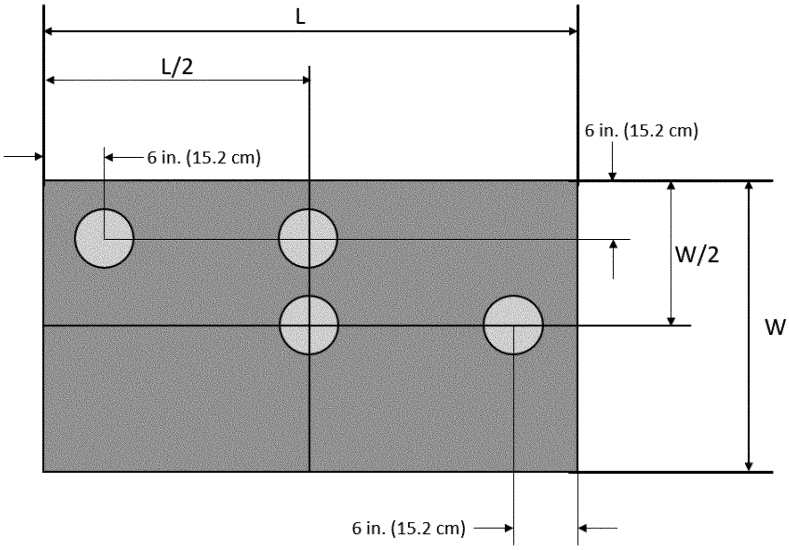

Figure 7. Impact test locations

(17) Instead of complying with sections 7.1 and 7.2 of ASTM F2933–21, comply with the following:

(i) 7.1 Each mattress and its retail package shall be marked or labeled clearly and legibly to indicate the following:

(ii) 7.1.1 The name, place of business (city, state, and mailing address, including zip code), and telephone number of the manufacturer, distributor, or seller.

(iii) 7.1.2 A code mark or other means that identifies the date (month and year at a minimum) of manufacture.

(iv) 7.2 The marking and labeling on the product shall be permanent.

(18) Do not comply with sections 7.2.1, 7.2.2, 7.2.2.1, 7.2.2.2, and 7.2.2.3 of ASTM F2933–21.

(19) Instead of complying with sections 7.3, 7.3.1, 7.3.2, and 7.3.3 of ASTM F2933–21, comply with the following:

(i) 7.3 Any upholstery labeling required by law shall not be used to meet the requirements of this section.

(ii) [Reserved]

(20) Instead of complying with sections 7.4 and 7.4.1 of ASTM F2933–21, comply with the following:

(i) *7.4 Warning Design for Mattresses:*

(ii) 7.4.1 The warnings shall be easy to read and understand and be in the English language at a minimum.

(iii) 7.4.2 Any marking or labeling provided in addition to those required by this section shall not contradict or confuse the meaning of the required information, or be otherwise misleading to the consumer.

(iv) 7.4.3 The warnings shall be conspicuous and permanent.

(v) 7.4.4 The warnings shall conform to ANSI Z535.4—2011, American National Standard for Product Safety Signs and Labels, sections 6.1–6.4, 7.2–7.6.3, and 8.1, with the following changes.

(vi) 7.4.4.1 In sections 6.2.2, 7.3, 7.5, and 8.1.2, replace ''should'' with ''shall.''

(vii) 7.4.4.2 In section 7.6.3, replace ''should (when feasible)'' with ''shall.''

(viii) 7.4.4.3 Strike the word ''safety'' when used immediately before a color (*e.g.,* replace ''safety white'' with ''white'').

(ix) *Note 3*—For reference, ANSI Z535.1 provides a system for specifying safety colors.

(x) 7.4.5 The safety alert symbol ''[Safety Alert Symbol]'' and the signal word ''WARNING'' shall be at least 0.2 in. (5 mm) high. The remainder of the text shall be in characters whose upper case shall be at least 0.1 in. (2.5 mm), except where otherwise specified.

(xi) *Note 4*—For improved warning readability, typefaces with large height-to-width ratios, which are commonly identified as ''condensed,'' ''compressed,'' ''narrow,'' or similar should be avoided.

(xii) 7.4.6 *Message Panel Text Layout:*

(xiii) 7.4.6.1 The text shall be left aligned, ragged right for all but one-line text messages, which can be left aligned or centered.

(xiv) *Note 5*—Left aligned means that the text is aligned along the left margin, and, in the case of multiple columns of text, along the left side of each individual column. Please see FIG. 8 for examples of left aligned text.

(xv) 7.4.6.2 The text in each column should be arranged in list or outline format, with precautionary (hazard avoidance) statements preceded by bullet points. Multiple precautionary statements shall be separated by bullet points if paragraph formatting is used.

(xvi) 7.4.7 Example warnings in the format described in this section are shown in FIGS. 9, 10, and 11.

(21) Instead of complying with sections 7.5, 7.5.1, 7.5.2, 7.5.3, 7.5.3.1, and 7.5.3.2 of ASTM F2933–21, comply with the following:

(i) 7.5 Warning Statements—Each mattress shall have warning statements to address the following, at a minimum, unless otherwise specified. The blank in the mattress fit statement beginning with ''If a gap is larger than,'' needs to be filled with ''1½ in. (3.8 cm)'' for full-size crib mattresses and ''1 in. (2.5 cm)'' for all other mattresses.

(ii) *Note 6*—Address means that verbiage other than what is shown can be used as long as the meaning is the same or information that is product-specific is presented.

SIDS AND SUFFOCATION HAZARDS

ALWAYS place baby on back to sleep to reduce the risks of SIDS and suffocation.

Babies have suffocated:

- on pillows, comforters, and extra padding
- in gaps between a wrong-size mattress, or extra padding, and side walls of product.

NEVER add soft bedding, padding, or an extra mattress.

USE ONLY one mattress at a time.

DO NOT cover the faces or heads of babies with a blanket or over-bundle them. Overheating can increase the risk of SIDS.

ALWAYS check mattress fit every time you change the sheets, by pushing mattress tight to one corner. Look for any gaps between the mattress and the side walls. If a gap is larger than ____, the mattress does not fit—*do not* use it.

(iii) Renumber section 7.3.1 of ASTM F2933–21 to section 7.5.1.

(iv) In section 7.5.1, replace the reference to ''7.3'' with a reference to ''7.5.''

(v) In section 7.5.1, replace the term ''Only use'' with the term ''*USE ONLY*.''

(vi) Renumber section 7.3.2 of ASTM F2933–21 to section 7.5.2.

(vii) In section 7.5.2, replace the term ''For non-full-size crib mattresses'' with the term ''For non-full-size crib mattresses and after-market mattresses for play yards and non-full-size cribs.''

(viii) In section 7.5.2, replace the reference to ''7.3'' with a reference to ''7.5.''

(ix) In section 7.5.2, replace the term ''Only use'' with the term ''*USE ONLY*.''

(x) Renumber section 7.3.3 of ASTM F2933–21 to section 7.5.3.

(xi) In section 7.5.3, replace the term ''may be included'' with ''are permitted, and replace the term ''7.3 and 7.4'' with ''7.5 and 7.6''.

(22) Instead of complying with sections 7.6, 7.6.1, 7.6.1.1, 7.6.1.2, or 7.7 of ASTM F2933–21, comply with the following:

(i) 7.6 The following warning statement shall be included exactly as stated in this paragraph (b)(22)(i) and shall be located at the bottom of the warnings on each mattress:

DO NOT remove these important safety warnings.

(ii) 7.7 *Additional Marking and Warnings for After-Market Mattresses for Play Yards and Non-Full-Size Cribs*—The mattress shall have:

(iii) 7.7.1 All warnings added by the original manufacturer which are in addition to those required by this standard.

(iv) 7.7.2 Assembly/attachment instructions that were provided on the original mattress.

(v) 7.7.3 The specific brand(s) and model(s) number(s) of the product(s) in which it is intended to be used.

(vi) 7.7.4 *For Rigid Sided Rectangular Products*—the following statement shall appear exactly as stated in this paragraph (b)(22)(vi) (the blanks are to be filled in as appropriate).

This mattress measures ____ long, ____ wide, and ____ thick when measured from seam to seam.

(23) Add the following paragraphs as section 7.8 of ASTM F2933–21:

(i) 7.8 Warning Design for Retail Packages.

(ii) 7.8.1 The warnings and statements are not required on the retail package if they are on the mattress and are visible in their entirety through the retail package. Cartons and other materials used exclusively for shipping the mattress are not considered retail packaging.

(iii) 7.8.2 Warning Statements—Each mattress' retail package shall have statements to address the following, at a minimum, and as specified in 7.4.1, 7.4.2, and 7.4.4–7.4.6.

(iv) 7.8.2.1 For full-size crib mattresses, each mattress' retail package shall be labeled with the warnings and statements specified in 7.5 and 7.5.1.

(v) 7.8.2.2 For non-full-size crib mattresses and after-market mattresses for play yards and non-full-size cribs, each mattress' retail package shall be labeled with the warnings and statements specified in 7.5, 7.5.2, 7.7.1–7.7.4, as applicable.

(24) Add the following figures to section 7 of ASTM F2933–21:

BILLING CODE 6355–01–P

(i) Figure 8.

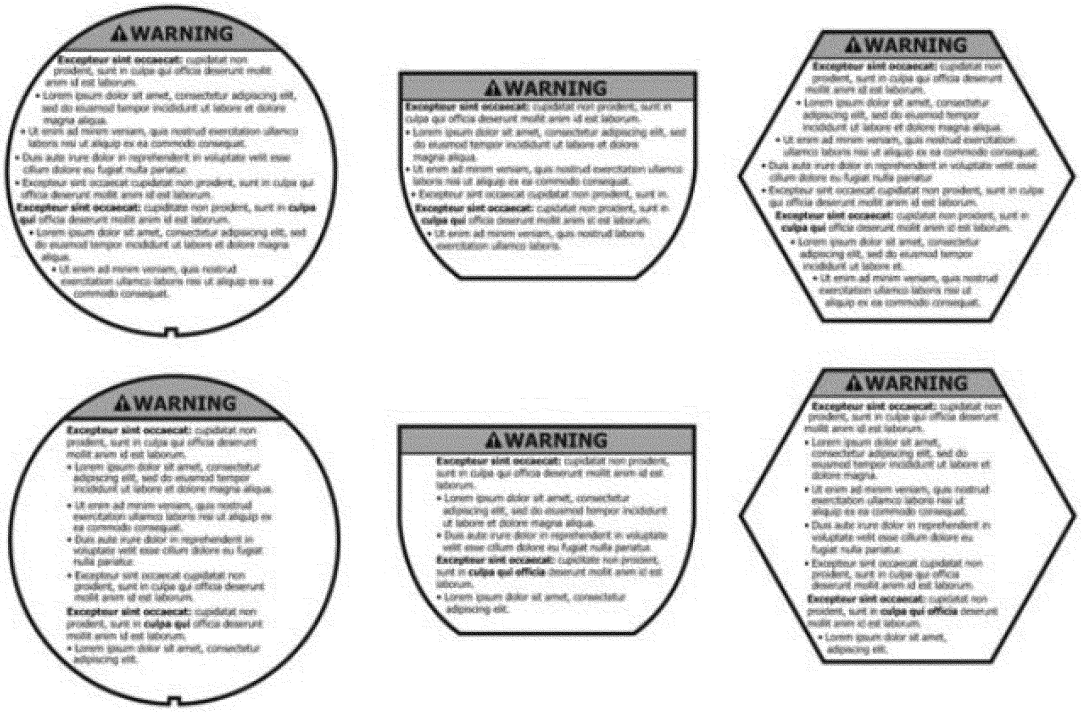

FIG. 8 Examples of Left Aligned Text.
This figure is not shown in actual size.

(ii) Figure 9.

⚠ WARNING

SIDS AND SUFFOCATION HAZARDS

ALWAYS place baby on back to sleep to reduce the risks of SIDS and suffocation.

Babies have suffocated:

- on pillows, comforters, and extra padding
- in gaps between a wrong-size mattress, or extra padding, and side walls of product.

NEVER add soft bedding, padding, or an extra mattress.

USE ONLY one mattress at a time.

DO NOT cover the faces or heads of babies with a blanket or over-bundle them. Overheating can increase the risk of SIDS.

ALWAYS check mattress fit **every time you change the sheets,** by pushing mattress tight to one corner. Look for any gaps between the mattress and the side walls. If a gap is larger than 1 ½ in. (3.8 cm), the mattress does not fit – **do not** use it.

DO NOT use this mattress in a crib having interior dimensions that exceed 28⅝ by 53 in. (73 by 135 cm) as measured from the innermost surfaces of the crib.

USE ONLY sheets and mattress pads designed specifically for crib mattresses.

DO NOT remove these important safety warnings.

FIG. 9 Example of warning label for Full-Size Crib Mattress.

This figure is not shown in actual size.

(iii) Figure 10.

⚠ WARNING

SIDS AND SUFFOCATION HAZARDS

ALWAYS place baby on back to sleep to reduce the risks of SIDS and suffocation.

Babies have suffocated:

- on pillows, comforters, and extra padding
- in gaps between a wrong-size mattress, or extra padding, and side walls of product.

NEVER add soft bedding, padding, or an extra mattress.

USE ONLY one mattress at a time.

DO NOT cover the faces or heads of babies with a blanket or over-bundle them. Overheating can increase the risk of SIDS.

ALWAYS check mattress fit **every time you change the sheets**, by pushing mattress tight to one corner. Look for any gaps between the mattress and the side walls. If a gap is larger than 1 in. (2.5 cm), the mattress does not fit – **do not** use it.

USE ONLY sheets and mattress pads designed specifically for this mattress size.

[*All warnings added by the original manufacturer which are in addition to those required by this standard.*]
[*Assembly/attachment instructions that were provided on the original mattress.*]
[*The specific brand(s) and model(s) number(s) of the product(s) in which the mattress is intended to be used.*]

DO NOT remove these important safety warnings.

FIG. 10 Example of warning label for After-Market Mattress for Mesh/Fabric Sided Products and Rigid Sided Non-Rectangular Products.

Items italicized in brackets are to be added as appropriate.

This figure is not shown in actual size.

(iv) Figure 11.

⚠ WARNING

SIDS AND SUFFOCATION HAZARDS

ALWAYS place baby on back to sleep to reduce the risks of SIDS and suffocation.

Babies have suffocated:

- on pillows, comforters, and extra padding
- in gaps between a wrong-size mattress, or extra padding, and side walls of product.

NEVER add soft bedding, padding, or an extra mattress.

USE ONLY one mattress at a time.

DO NOT cover the faces or heads of babies with a blanket or over-bundle them. Overheating can increase the risk of SIDS.

ALWAYS check mattress fit **every time you change the sheets**, by pushing mattress tight to one corner. Look for any gaps between the mattress and the side walls. If a gap is larger than 1 in. (2.5 cm), the mattress does not fit – **do not** use it.

USE ONLY sheets and mattress pads designed specifically for this mattress size.

[*All warnings added by the original manufacturer which are in addition to those required by this standard.*]
[*Assembly/attachment instructions that were provided on the original mattress.*]
[*The specific brand(s) and model(s) number(s) of the product(s) in which the mattress is intended to be used.*]

This mattress measures __ long, __ wide, and __ thick when measured from seam to seam. [*Fill in blanks as appropriate.*]

DO NOT remove these important safety warnings.

FIG. 11 Example of warning label for After-Market Mattress for Rigid Sided Rectangular Non-Full-Size Cribs.

Items italicized in brackets are to be added as appropriate. The blanks are to be filled in as appropriate. This figure is not shown in actual size.

(25) Redesignate section 8 of ASTM F2933–21 as section 9.

(26) Add a new section 8 of ASTM F2933–21:

(i) *8. Instructional Literature.*

(ii) 8.1 Instructions shall be provided with the mattress and shall be easy to read and understand, and shall be in the English language, at a minimum. These instructions shall include information on assembly, maintenance, cleaning, and use, where applicable.

(iii) 8.2 The instructions shall have statements to address the following, at a minimum.

(iv) 8.2.1 All warnings included in section 7.5, as applicable.

(v) 8.2.2 All additional markings and warnings included in section 7.7, as applicable.

(vi) 8.3 The warnings in the instructions shall meet the requirements specified in 7.4.4, 7.4.5, and 7.4.6, except that sections 6.4 and 7.2–7.6.3 of ANSI Z535.4 need not be applied. However, the signal word and safety alert symbol shall contrast with the background of the signal word panel, and the cautions and warnings shall contrast with the background of the instructional literature.

(vii) *Note 7*—For example, the signal word, safety alert symbol, and the warnings may be black letters on a white background, white letters on a black background, navy blue letters on an off-white background, or some other high-contrast combination.

(viii) 8.4 Any instructions provided in addition to those required by this section shall not contradict or confuse the meaning of the required information, or be otherwise misleading to the consumer.

(ix) *Note 8*—For additional guidance on the design of warnings for instructional literature, please refer to ANSI Z535.6, *American National Standard: Product Safety Information in Product Manuals, Instructions, and Other Collateral Materials.*

Alberta E. Mills,

Secretary, Consumer Product Safety Commission.

[FR Doc. 2022–02414 Filed 2–14–22; 8:45 am]

BILLING CODE 6355–01–C

FEDERAL REGISTER

Vol. 87 Tuesday,

No. 31 February 15, 2022

Part III

Securities and Exchange Commission

17 CFR Parts 229, 232 240, et al.
Rule 10b5–1 and Insider Trading; Proposed Rule

SECURITIES AND EXCHANGE COMMISSION

17 CFR Parts 229, 232, 240, and 249

[Release No. 33–11013; 34–93782; File No. S7–20–21]

RIN 3235–AM86

Rule 10b5–1 and Insider Trading

AGENCY: Securities and Exchange Commission.

ACTION: Proposed rule.

SUMMARY: The Securities and Exchange Commission (''Commission'') is proposing amendments to its rules under the Securities Exchange Act of 1934. The proposed amendments would add new conditions to the availability of an affirmative defense under an Exchange Act rule that are designed to address concerns about abuse of the rule to opportunistically trade securities on the basis of material nonpublic information in ways that harm investors and undermine the integrity of the securities markets. The Commission is also proposing new disclosure requirements regarding the insider trading policies of issuers, and the adoption and termination (including modification) of certain trading arrangements by directors, officers, and issuers. In addition, the Commission is proposing amendments to the disclosure requirements for executive and director compensation regarding the timing of equity compensation awards made in close proximity in time to the issuer's disclosure of material nonpublic information. Finally, the Commission is proposing amendments to Forms 4 and 5 to identify transactions made pursuant to certain trading arrangements, and to disclose all gifts of securities on Form 4.

DATES: Comments should be received on or before April 1, 2022.

ADDRESSES: Comments may be submitted by any of the following methods:

Electronic Comments

- Use our internet comment form (*https://www.sec.gov/regulatory-actions/how-to-submit-comments*); or
- Send an email to *rule-comments@sec.gov.* Please include File Number S7–20–21 on the subject line.

Paper Comments

- Send paper comments to Secretary, Securities and Exchange Commission, 100 F Street NE, Washington, DC 20549–1090.

All submissions should refer to File Number S7–20–21. This file number should be included on the subject line if email is used. To help us process and review your comments more efficiently, please use only one method of submission. We will post all comments on our website (*https://www.sec.gov/rules/proposed.shtml*). Comments also are available for website viewing and printing in our Public Reference Room, 100 F Street NE, Washington, DC 20549, on official business days between the hours of 10:00 a.m. and 3:00 p.m. Operating conditions may limit access to the Commission's public reference room. All comments received will be posted without change. Persons submitting comments are cautioned that we do not redact or edit personal identifying information from comment submissions. You should submit only information that you wish to make publicly available.

We or the staff may add studies, memoranda, or other substantive items to the comment file during this rulemaking. A notification of the inclusion in the comment file of any such materials will be made available on our website. To ensure direct electronic receipt of such notifications, sign up through the ''Stay Connected'' option at *www.sec.gov* to receive notifications by email.

FOR FURTHER INFORMATION CONTACT: Sean Harrison, Special Counsel, or Felicia Kung, Office Chief, Office of Rulemaking, at (202) 551–3430, Division of Corporation Finance, 100 F Street NE, Washington, DC 20549.

SUPPLEMENTARY INFORMATION: The Commission is proposing amendments to:

Commission reference	CFR citation (17 CFR)
Regulation S–K [17 CFR 229.10 through 229.1305]:	
Item 402	§ 229.402.
Item 408	§ 229.408.
Regulation S–T [17 CFR 232.11 through 232.903]:	
Item 405	§ 232.405.
Securities Exchange Act of 1934 (Exchange Act) [15 U.S.C. 78a *et seq.*]:	
Rule 10b5–1	§ 240.10b5–1.
Schedule 14A	§ 240.14a–101.
Schedule 14C	§ 240.14c–101.
Rule 16a–3	§ 240.16a–3.
Form 4	§ 249.104.
Form 5	§ 249.105.
Form 20–F	§ 249.220f.
Form 10–Q	§ 249.308a.
Form 10–K	§ 249.310.

Table of Contents

I. Introduction
II. Discussion of the Proposed Amendments
A. Amendments to Rule 10b5–1
1. Cooling-Off Period
2. Director and Officer Certifications
3. Restricting Multiple Overlapping Rule 10b5–1 Trading Arrangements and Single-Trade Arrangements
4. Requiring That Trading Arrangements Be Operated in Good Faith
B. Additional Disclosures Regarding Rule 10b5–1 Trading Arrangements
1. Quarterly Reporting of Rule 10b5–1(c) and Non-Rule 10b5–1(c) Trading Arrangements
2. Disclosure of Insider Trading Policies and Procedures
3. Structured Data Requirements
4. Identification of Rule 10b5–1(c) and Non-Rule 10b5–1(c)(1) Transactions on Forms 4 and 5
C. Disclosure Regarding the Timing of Option Grants and Similar Equity Instruments Shortly Before or After the Release of Material Nonpublic Information
D. Reporting of Gifts on Form 4
III. General Request for Comment
IV. Economic Analysis
A. Broad Economic Considerations
B. Amendments to Rule 10b5–1(c)(1)
1. Baseline and Affected Parties
2. Benefits
3. Costs
4. Effects on Efficiency, Competition, and Capital Formation

5. Reasonable Alternatives
6. Request for Comment
C. Disclosure of Trading Arrangements in New Item 408 of Regulation S–K and Mandatory Rule 10b5–1 Checkbox in Amended Forms 4 and 5
1. Baseline and Affected Parties
2. Benefits
3. Costs
4. Effects on Efficiency, Competition, and Capital Formation
5. Reasonable Alternatives
6. Request for Comment
D. Additional Disclosure of the Timing of Option Grants and Related Company Policies and Practices (Amendments to Item 402 of Regulation S–K)
1. Baseline and Affected Parties
2. Benefits
3. Costs
4. Effects on Efficiency, Competition, and Capital Formation
5. Reasonable Alternatives
6. Request for Comment
E. Additional Disclosure of Insider Gifts of Stock
1. Baseline and Affected Parties
2. Benefits
3. Costs
4. Effects on Efficiency, Competition, and Capital Formation
5. Reasonable Alternatives
6. Request for Comment
V. Paperwork Reduction Act
A. Summary of the Collections of Information
B. Estimates of the Proposed Amendments' Effects on the Collections of Information
C. Incremental and Aggregate Burden and Cost Estimates
VI. Initial Regulatory Flexibility Act Analysis
A. Reasons for, and Objectives of, the Proposed Action
B. Legal Basis
C. Small Entities Subject to the Proposed Rules
D. Reporting, Recordkeeping, and Other Compliance Requirements
E. Duplicative, Overlapping, or Conflicting Federal Rules
F. Significant Alternatives
G. Request for Comments
VII. Small Business Regulatory Enforcement Fairness Act
VIII. Statutory Authority

I. Introduction

Congress enacted the Federal securities laws to promote fair and transparent securities markets, ''avoid [ ] frauds,'' and ''substitute a philosophy of full disclosure for the philosophy of caveat emptor and thus to achieve a high standard of business ethics in the securities industry.'' [1] The securities laws' antifraud provisions that proscribe insider trading play an essential role in maintaining the fairness and integrity of our markets. We have long recognized that insider trading and the fraudulent use of material nonpublic information by corporate insiders [2] not only harm individual investors but also undermine the foundations of our markets by eroding investor confidence.[3] Congress has recognized the harmful impact of insider trading on multiple occasions and has authorized enhanced civil penalties specifically for insider trading.[4]

Section 10(b) of the Exchange Act is one of the securities laws' primary antifraud provisions.[5] Section 10(b) makes it unlawful to use or employ, in connection with the purchase or sale of any security, ''any manipulative or deceptive device or contrivance in contravention of such rules and regulations as the Commission may prescribe.'' [6] The ''manipulative or deceptive device[s] or contrivance[s]'' prohibited by Section 10(b) and 17 CFR 240.10b–5 (Rule 10b–5) (adopted thereunder) include the purchase or sale of a security of any issuer on the basis of material nonpublic information about that security or its issuer, in breach of a duty owed directly, indirectly, or derivatively, to the issuer of that security or the shareholders of that issuer, or to any person who is the source of the material nonpublic information.[7]

The Commission adopted Rule 10b5–1 in August 2000 to provide more clarity on the meaning of ''manipulative or deceptive device[s] or contrivance[s]'' prohibited by Exchange Act Section 10(b) and Rule 10b–5 with respect to trading on the basis of material nonpublic information.[8] At the time, Federal appellate courts diverged on the issue of what, if any, connection must be shown between a trader's possession of material nonpublic information and his or her trading to establish liability under Rule 10b–5. Rule 10b5–1 addressed this issue by providing that a purchase or sale of an issuer's security is on the basis of material nonpublic information about that security or issuer for purposes of Section 10(b) if the person making the purchase or sale *was aware of* material nonpublic information when the person made the purchase or sale.[9] In addition, Rule 10b5–1(c) established an affirmative defense to Rule 10b–5 liability for insider trading in circumstances where it is apparent that the trading was not made on the basis of material nonpublic information because the trade was pursuant to a binding contract, an instruction to another person to execute the trade for the instructing person's account, or a written plan (collectively or individually a ''trading arrangement'') adopted when the trader was not aware of material nonpublic information.[10] Rule 10b5–1 also provides a separate affirmative defense

[1] *Affiliated Ute Citizens of Utah* v. *United States,* 406 U.S. 128, 151 (1972); accord *Lorenzo* v. *SEC,* 139 S. Ct. 1094, 1103 (2019).

[2] The term ''corporate insider'' as used in this release, refers to officers and directors of an issuer.

[3] *See In re Cady, Roberts & Co.,* 40 SEC. 907, 1961 WL 60638, at *4 n.15 (1961) (''A significant purpose of the Exchange Act was to eliminate the idea that use of inside information for personal advantage was a normal emolument of corporate office.''); *see also United States* v. *O'Hagan,* 521 U.S. 642, 658 (1997) (The insider trading prohibition is consistent with the ''animating purpose'' of the Federal securities laws: ''to insure honest securities markets and thereby promote investor confidence.'').

[4] *See* Insider Trading Sanctions Act of 1984, Public Law 98–376, 98 Stat. 1264; Insider Trading and Securities Fraud Enforcement Act of 1988, Public Law 100–704, 102 Stat. 4677, codified at Section 21A of the Exchange Act, 15 U.S.C. 78u–1. Congress has enacted other laws that build on the insider trading prohibition. *See, e.g.,* Section 20(d) of the Exchange Act [15 U.S.C. 78t(d)]; Section 20A of the Exchange Act [15 U.S.C. 78t–1]; STOCK Act, Public Law 112–105, 126 Stat. 291.

[5] 15 U.S.C. 78j(b).

[6] Rule 10b–5, adopted pursuant to Section 10(b), prohibits the use of ''any device, scheme, or artifice to defraud''; the making of ''any untrue statement of a material fact'' or the ''omi[ssion]'' of ''a material fact necessary in order to make the statements made, in the light of the circumstances under which they were made, not misleading''; or ''any act, practice, or course of business which operates or would operate as a fraud or deceit upon any person.''

[7] *See Salman* v. *United States,* 137 S.Ct. 420, 425 n.2 (2016) (an insider who trades in the securities of his corporation on the basis of material nonpublic information ''breaches a duty to, and takes advantage of, the shareholders of his corporation''); *O'Hagan,* 521 U.S. at 651–53; *Chiarella* v. *United States,* 445 U.S. 222, 228–29 (1980); *see also* 15 U.S.C. 78u–1(a)(1); 17 CFR 240.10b5–2 (non-exclusive definition of circumstances in which a person has the requisite duty for purposes of the ''misappropriation'' theory of insider trading). Liability for insider trading under Section 10(b) requires ''scienter,'' *i.e.,* ''an intent on the part of the defendant to deceive, manipulate or defraud.'' *Aaron* v. *SEC,* 446 U.S. 680, 686 & n.5, 689–95 (1980); *see also Selective Disclosure and Insider Trading,* Release No. 33–7881 (Aug. 15, 2000) [65 FR 51716 at 51727 (Aug. 24, 2000)] (''2000 Adopting Release'').

[8] *See* 2000 Adopting Release *supra* note 7.

[9] A person is aware of material nonpublic information if they know, consciously avoid knowing, or are reckless in not knowing that the information is material and nonpublic. *See SEC* v. *Obus,* 693 F.3d 276, 286–88, 293 (2d Cir. 2012); *United States* v. *Gansman,* 657 F.3d 85, 91 n.7, 94 (2d Cir. 2011). Rule 10b5–1 and its awareness standard is ''entitled to deference.'' *United States* v. *Royer,* 549 F.3d 886, 899 (2d Cir. 2008) (applying *Chevron U.S.A., Inc.* v. *Natural Res. Def. Council, Inc.,* 467 U.S. 837, 843–44 (1984)), *cert. denied,* 558 U.S. 934, and 558 U.S. 935 (2009); *see also United States* v. *Rajaratnam,* 719 F.3d 139, 157–61 (2d Cir. 2013), *cert. denied,* 134 S. Ct. 2820 (2014). The decision in *Fried* v. *Stiefel Labs., Inc.,* 814 F.3d 1288, 1295 (11th Cir. 2016), erroneously suggests that a person must ''use'' the inside information to purchase or sell securities, but the court did not address Rule 10b5–1 in that private action. The proposed rule would not alter the ''awareness'' standard.

[10] Rule 10b5–1 does not modify or address any other aspect of insider trading law. Nor does Rule 10b5–1 provide an affirmative defense for other securities fraud claims, such as a claim under Rule 10b–5 for an ''untrue statement of a material fact.'' 17 CFR 240.10b–5(b).

designed solely for non-natural persons that trade.[11]

Since the adoption of Rule 10b5–1, courts,[12] commentators [13] and members of Congress [14] have expressed concern that the affirmative defense under Rule 10b5–1(c)(1)(i) has allowed traders to take advantage of the liability protections provided by the rule to opportunistically trade securities on the basis of material nonpublic information. Furthermore, some academic studies of Rule 10b5–1 trading arrangements have shown that corporate insiders trading pursuant to Rule 10b5–1 consistently outperform trading of executives and directors not conducted under a Rule 10b5–1 trading arrangement.[15] Practices that have raised concern include corporate insiders using multiple overlapping plans to selectively cancel individual trades on the basis of material nonpublic information, or commencing trades soon after the adoption of a new plan or the modification of an existing plan.[16] In addition, concerns have been raised about issuers abusing Rule 10b5–1(c)(1) plans to conduct share repurchases to boost the price of the issuer's stock before sales by corporate insiders.[17] Recently, the Commission's Investor Advisory Committee (''IAC'') [18] recommended that we consider revising Rule 10b5–1 to address apparent loopholes in the rule that allow corporate insiders to unfairly exploit informational asymmetries.[19]

We share the concern about the prevalence of trading practices by corporate insiders and issuers that suggest the misuse of material nonpublic information. We also understand that some issuers have engaged in a practice of granting stock options and other equity awards with option-like features to executive officers and directors in coordination with the release of material nonpublic information.[20] In addition, there is research indicating that some corporate insiders may be opportunistically timing gifts of securities while aware of material nonpublic information relating to such securities.[21] These practices can undermine the public's confidence and expectations of honest and fair capital markets by creating the appearance that some insiders, by virtue of their positions, do not play by the same rules as everyone else.

We note that similar concerns about misuse of material nonpublic information have been raised in connection with an issuer's stock repurchases. In a separate release, we are proposing amendments to update the disclosure requirements for purchases of equity securities by an issuer and affiliated purchasers under 17 CFR 229.703 (Item 703 of Regulation S–K).[22]

In this release, we are proposing several rule and form amendments to address potentially abusive practices associated with Rule 10b5–1 trading arrangements, grants of options and other equity instruments with similar features and the gifting of securities. Specifically, our proposals would:

- Require a Rule 10b5–1 trading arrangement entered into by officers or directors to include a 120-day mandatory cooling-off period before any trading can commence under the trading arrangement after its adoption (including adoption of a modified trading arrangement); [23]
- Require a Rule 10b5–1 trading arrangement entered into by issuers to include a 30-day mandatory cooling-off period before any trading can commence under the trading arrangement after its adoption (including adoption of a modified trading arrangement);
- Require officers and directors to personally certify that they are not aware of material nonpublic information about the issuer or the security when

[11] *See* Rule 10b5–1(c)(2) [17 CFR 240.10b5–1(c)(2)]. This affirmative defense is available to entities that demonstrate that the individual making the investment decision on behalf of the entity was not aware of material nonpublic information; and the entity had implemented reasonable policies and procedures to prevent insider trading.

[12] District courts in private securities law actions have ''acknowledge[d] the possibility that a clever insider might 'maximize' their gain from knowledge of an impending [stock] price drop over an extended amount of time, and seek to disguise their conduct with a 10b5–1 plan.'' *In re Immucor Inc. Sec. Litig.,* 2006 WL 3000133, at *18 n.8 (N.D. Ga. Oct. 4, 2006); *accord Nguyen* v. *New Link Genetics Corp.,* 297 F. Supp. 3d 472, 494–96 (S.D.N.Y. 2018); *Freudenberg* v. *E*Trade Fin. Corp.,* 712 F. Supp. 2d 171, 200 (S.D.N.Y. 2010); *Malin* v. *XL Cap. Ltd.,* 499 F. Supp. 2d 117, 156 (D. Conn. 2007), *aff'd,* 312 F. App'x 400 (2d Cir. 2009).

[13] In December 2020, the Commission proposed to amend Forms 4 and 5 to add a checkbox to permit filers to indicate that the reported transaction satisfied Rule 10b5–1. *See Rule 144 Holding Period and Form 144 Filings,* Release No. 33–10991 (Dec. 22, 2020) [85 FR 79936]. The Commission received several comment letters in response expressing concern about potential abuse of Rule 10b5–1. *See, e.g.,* letter from David Larcker et al. (dated Mar. 10, 2021) at *https://www.sec.gov/comments/s7-24-20/s72420-8488827-229970.pdf;* letter from Council of Institutional Investors (''CII'') (dated Apr. 22, 2021) at *https://www.sec.gov/comments/s7-14-20/s71420-8709408-236962.pdf;* letter from CII (dated Mar. 18, 2021) at *https://www.sec.gov/comments/s7-24-20/s72420-8519687-230183.pdf.* In response to the publication of its semiannual regulatory agenda, the Commission also received a letter requesting that a rulemaking project be initiated to address potential abuses of Rule 10b5–1. See letter from CII (dated Dec. 13, 2018) at *https://www.sec.gov/comments/s7-20-18/s72018-4766666-176839.pdf.*

[14] *See* letter from Senator Elizabeth Warren et al. (Feb. 10, 2021) at *https://www.warren.senate.gov/imo/media/doc/02.10.2021%20Letter%20from%20Senators%20Warren,%20Brown,%20and%20Van%20Hollen%20to%20Acting%20Chair%20Lee.pdf.*

[15] *See, e.g.,* Alan D. Jagolinzer, *SEC Rule 10b5–1 and Insiders' Strategic Trade,* 55 Mgmt. Sci. 224 (2009); M. Todd Henderson et al., *Hiding in Plain Sight: Can Disclosure Enhance Insiders' Trade Returns,* 103 Geo. L.J. 1275 (2015); Taylan Mavruk et al., *Do SEC's 10b5–1 Safe Harbor Rules Need to be Rewritten?,* 2016 Colum. Bus. L. Rev., 133 (2016); Artur Hugon and Yen-Jung Lee, *SEC Rule 10b5–1 Plans and Strategic Trade around Earnings Announcements* (2016) at *https://ssrn.com/abstract=2880878* or *http://dx.doi.org/10.2139/ssrn.2880878.*

[16] See, *e.g.,* John P. Anderson, Anticipating a Sea Change for Insider Trading Law: From Trading Plan Crisis to Rational Reform, 2015 Utah L. Rev. 339 (2015).; David F. Larcker et al., Gaming the System: Three ''Red Flags'' of Potential 10b5–1 Abuse, Stanford Closer Look Series (Jan. 19, 2021) (''Gaming the System'') (noting from their analysis of a sample of sales transactions made pursuant to Rule 10b5–1 plans between January 2016 and May 2020 that trades occurring within 30 days of adoption of a Rule 10b5–1 plan are approximately 50 percent larger than trades made six or more months later); see also infra note 112 and accompanying text.

[17] *See* Jesse M. Fried, Testimony before the Investor Protection, Entrepreneurship, and Capital Markets Subcommittee, U.S. House Committee on Financial Services, (Oct. 17, 2019) at *https://ssrn.com/abstract=3474175* (''Fried Testimony'').

[18] The IAC was established in April 2012 pursuant to Section 911 of the Dodd-Frank Wall Street Reform and Consumer Protection Act [Pub. L. 111–203, sec. 911, 124 Stat. 1376, 1822 (2010)] to advise and make recommendations to the Commission on regulatory priorities, the regulation of securities products, trading strategies, fee structures, the effectiveness of disclosure, initiatives to protect investor interests and to promote investor confidence and the integrity of the securities marketplace.

[19] *See* Recommendations of the Investor Advisory Committee Regarding Rule 10b5–1 Plans (Sept. 9, 2021) (''IAC Recommendations''), at *https://www.sec.gov/spotlight/investor-advisory-committee-2012/20210916-10b5-1-recommendation.pdf.* The IAC also held a panel discussion regarding Rule 10b5–1 plans at its June 10, 2021 meeting, at *https://www.sec.gov/video/webcast-archive-player.shtml?document_id=iac061021-2.*

[20] See, *e.g.,* William Hughes, Stock Option Spring-loading: An Examination of Loaded Justifications and New SEC Disclosure Rules, 33 J. Corp. L. 777 (2008); *Howland* v. *Kumar,* 2019 Del. Ch. LEXIS 221.

[21] *See, e.g.,* S. Burcu Avci et al., Manipulative Games of Gifts by Corporate Executives, 18 U. Pa. J. Bus. L. 1131 (2016); David Yermack, *Deductio ad absurdum: CEOs donating their own stock to their family foundations,* 94 J. Fin. Econ. 107 (2009); S. Burcu Avci et al., *Insider Giving,* 71 Duke L.J. (Forthcoming 2021) electronic copy available at: *https://ssrn.com/abstract=3795537.*

[22] *See Share Repurchase Disclosure Modernization,* Release No. 34–93783 (Dec. 15, 2021). Item 703 of Regulation S–K requires disclosure about a registrant's or affiliated purchaser's purchases of any class of the registrant's equity securities that are registered under Exchange Act Section 12. Many registrants use Rule 10b5–1 trading arrangements in their repurchase programs.

[23] A modification of a Rule 10b5–1(c) trading arrangement, including cancelling a trade, is equivalent to terminating the prior trading arrangement and adopting a new Rule 10b5–1 trading arrangement.

they adopt a Rule 10b5–1 trading arrangement;

• Enhance existing corporate disclosures and require new quarterly disclosure regarding the adoption and termination of Rule 10b5–1 trading arrangements and other trading arrangements of directors, officers, and issuers, and the terms of such trading arrangements, and require that the disclosure be reported using a structured data language (specifically, Inline eXtensible Business Reporting Language (''Inline XBRL''));

• Provide that the affirmative defense under Rule 10b5–1(c)(1) does not apply to multiple overlapping Rule 10b5–1 trading arrangements for open market trades in the same class of securities;

• Limit the availability of the affirmative defense under Rule 10b5–1(c)(1) for a single-trade plan to one single-trade plan during any consecutive 12-month period;

• Require an issuer to disclose in its Form 10–K or Form 20–F whether or not (and if not, why not) the issuer has adopted insider trading policies and procedures that govern the purchase, sale, or other disposition of the registrant's securities by directors, officers, and employees that are reasonably designed to promote compliance with insider trading laws, rules, and regulations. If the issuer has adopted such policies and procedures, the issuer would be required to disclose such policies. Such disclosures would be subject to the principal executive and principal financial officer certifications required by Section 302 of the Sarbanes-Oxley Act,[24] and required to be tagged using Inline XBRL;

• Require new disclosure regarding grants of equity compensation awards such as stock options and stock appreciation rights (''SARs'') close in time to the issuer's disclosure of material nonpublic information (including earnings releases and other major announcements) and require that the disclosure be reported using Inline XBRL; and

• Require prompt disclosure of dispositions by gifts of securities by insiders on Form 4 within two business days after such a gift is made.

We welcome feedback and encourage interested parties to submit comments on any or all aspects of the proposed amendments. When commenting, it would be most helpful if you include the reasoning behind your position or recommendation.

[24] 15 U.S.C. 7241. *See infra* notes 52 and 53 and accompanying text.

II. Discussion of the Proposed Amendments

A. Amendments to Rule 10b5–1 [25]

As noted above, Rule 10b5–1(c)(1) established an affirmative defense to Rule 10b–5 liability if the trade was made pursuant to a binding contract, an instruction to another person to execute the trade for the instructing person's account, or a written plan. A person asserting a Rule 10b5–1(c)(1) defense must satisfy several conditions. First, the person must demonstrate that, before becoming aware of material nonpublic information, they had entered into a binding contract to purchase or sell the security, provided instructions to another person to execute the trade for the instructing person's account, or adopted a written plan for trading the securities.[26] Second, the person must demonstrate that the applicable contract, instructions, or plan:

• Specified the amount of securities to be purchased or sold, price, and date;

• Provided a written formula or algorithm, or computer program, for determining amounts, prices, and dates; or

• Did not permit the person to exercise any subsequent influence over how, when, or whether to effect purchases or sales; provided, in addition, that any other person who exercised such influence was not aware of the material nonpublic information when doing so.

Third, the person must demonstrate that the purchase or sale was pursuant to the prior contract, instruction, or plan. Rule 10b5–1(c)(1) states that a purchase or sale is not pursuant to a contract, instruction, or plan if, among other things, the person who entered into the arrangement altered or deviated from the contract, instruction, or plan, or entered into or altered a corresponding or hedging transaction or position with respect to the securities.[27] Finally, the rule provides that the affirmative defense of a trading arrangement is only available if the trading arrangement was entered into ''in good faith and not as part of a plan or scheme to evade the prohibitions'' of the rule.[28]

Since the adoption of Rule 10b5–1, the use of trading arrangements under Rule 10b5–1(c)(1) has become widespread.[29] Over the years concerns have arisen that the design of Rule 10b5–1(c)(1) has enabled corporate insiders to trade on material nonpublic information. Examples of potentially abusive practices include the use of multiple overlapping plans with selective cancellation of certain plans or trades on the basis of material nonpublic information, as well as initiation or resumption of trading close in time to plan adoption or modification. Furthermore, multiple studies examining Rule 10b5–1(c)(1) trading arrangements have identified potentially abusive activity where trades occur soon after the adoption of the arrangement (*e.g.,* commencing trades within the same fiscal quarter as the adoption of the arrangement), and trading arrangements that are terminated shortly after adoption.[30] The amendments that we are proposing to Rule 10b5–1(c)(1) are intended to reduce these potentially abusive practices associated with Rule 10b5–1(c)(1) trading arrangements.

1. Cooling-Off Period

Currently, Rule 10b5–1(c)(1) does not impose any waiting period between the date the trading arrangement is adopted and the date of the first transaction to be executed under the trading arrangement. Under the current rule, a trader can adopt a Rule 10b5–1(c)(1)

[25] In addition to the proposed revisions to Rule 10b5–1 discussed in this release, due to current **Federal Register** formatting requirements, we are also proposing a technical change that, as indicated, incorporates the Preliminary Note to Rule 10b5–1 into the body of the rule.

[26] *See, e.g., SEC* v. *Mozilo,* 2010 WL 3656068, at *20 (C.D. Cal. Sept. 16, 2010) (''Although [officer's/director's] stock sales were made pursuant to Rule 10b5–1 trading plans, the SEC has raised genuine issues of material fact that [he] was aware of material, nonpublic information at the time he adopted or amended these trading plans.'').

[27] Rule 10b5–1(c)(1)(i)(C).

[28] Rule 10b5–1(c)(1)(ii).

[29] According to one survey, directors and executives at more than half of S&P 500 companies used Rule 10b5–1 trading arrangements in 2015. *See* Morgan Stanley, ''Defining the Fine Line: Mitigating Risk with 10b5–1 Plans'' (2018) at *https://advisor.morganstanley.com/austin.cornish/documents/field/a/au/austin-cornish/Mitigating%20Risk%20with%2010b5-1%20Plans.pdf. See also* Bonaimé et al., *Payout Policy Trade-Offs, infra* note 159 and accompanying text; *Skadden Insights: Share Repurchases* 4–6 (Mar. 16, 2020) (discussing the use of Rule 10b5–1 plans for issuer share repurchases) at *https://www.skadden.com/insights/publications/2020/03/share-repurchases.*

[30] *See, e.g.,* Alan D. Jagolinzer, *SEC Rule 10b5–1 and Insiders' Strategic Trade,* Mgmt. Sci. 224 (2009); Gaming the System *supra* note 16 (noting that Rule 10b5–1 plans with a short cooling-off period, or adopted in a given quarter that begin trading before that quarter's earnings announcement systematically avoid losses and foreshadow considerable stock declines over the subsequent six months); and Taylan Mavruk et al., *Do SEC's 10b5–1 Safe Harbor Rules Need to be Rewritten?, Colum. Bus. L. Rev.,* 133, 165 (2016) (observing from their study that the first trade pursuant to a Rule 10b5–1 plan showed abnormal profitability and suggesting that insiders set up Rule 10b5–1 plans when in possession of material nonpublic information). *See also* discussion at *infra* Section IV.A.

trading arrangement and execute a trade under the arrangement on the same day. Investors and other commentators have suggested that requiring a minimum waiting period of several months between the adoption of a trading arrangement and the date on which trading can commence would reduce the risk that an insider could benefit from any material nonpublic information of which they may have been aware at the time of adopting the trading arrangement.[31] We propose to amend Rule 10b5–1(c)(1) to add as a condition to the availability of the affirmative defense (1) a minimum 120-day cooling-off period after the date of adoption of any Rule 10b5–1(c)(1) trading arrangement (including adoption of a modified trading arrangement) by a director or officer (as defined in 17 CFR 240.16a–1(f) (Rule 16a–1(f))) before any purchases or sales under the new or modified trading arrangement; and (2) a minimum 30-day cooling-off period after the date of adoption of any Rule 10b5–1(c)(1) trading arrangement by an issuer before any purchases or sales under the new or modified trading arrangement. Under the proposed amendments, for directors and officers subject to Exchange Act Section 16 reporting, and for issuers, the Rule 10b5–1(c)(1) affirmative defense would only be available for a trading arrangement that includes a cooling-off period that delays transactions under the trading arrangement for at least 120 or 30 days (whichever is applicable) after the date of adoption of any new/modified trading arrangement. The proposed amendments also include a note that clarifies that a ''modification'' of an existing Rule 10b5–1(c)(1) trading arrangement, including cancelling one or more trades, would be deemed equivalent to terminating the plan in its entirety, and the cooling-off period would therefore apply after a ''modification'' before any new trades could commence.[32]

We are proposing these cooling off periods to address concerns that traders are able to misuse the rule to set up trading arrangements that use material nonpublic information about an issuer prior to the disclosure of such information. In particular, evidence suggests that Rule 10b5–1(c)(1) trading arrangements that commence trades prior to an earnings announcement are more likely to result in abnormal returns.[33] In the case of officers and directors, a 120-day cooling off period would span an entire quarter, meaning that no trading could occur under a Rule 10b5–1(c)(1) plan adopted during a particular quarter until after that quarter's financial results are announced. The length of the proposed cooling-off period would deter insiders from seeking to capitalize on unreleased material nonpublic information for the upcoming quarter. In addition, a 120-day cooling off period and the 30-day cooling off period for issuers between adoption or modification of a Rule 10b5–1(c)(1) trading arrangement and transactions made under the arrangement align with recommendations from a wide range of commentators about the appropriate length of time for such a cooling off period.[34] We anticipate that, if adopted, the proposed cooling-off periods would deter officers, directors, and issuers from adopting or modifying their Rule 10b5–1 plans on the basis of material nonpublic information.

The proposed cooling-off periods would apply to directors and officers (as defined in Rule 16a–1(f)) of the issuer,[35] as well as to an issuer that structures a share repurchase plan as a Rule 10b5–1(c)(1)(i) trading arrangement. This requirement would prevent directors, officers, and issuers who might be aware of material nonpublic information from adopting or modifying a Rule 10b5–1 trading arrangement and trading immediately pursuant to the arrangement. The proposed cooling off period should also discourage registrants, directors, and officers from selectively terminating or cancelling a planned trade under a Rule 10b5–1 trading arrangement because they would be subject to a cooling-off period with respect to the adoption of any new/modified plan.

Applying a cooling-off period to directors and ''officers'' as that term is defined in Exchange Act Rule 16a–1(f)[36] is appropriate because such individuals are more likely than others to be aware of material nonpublic information in the general course of events, and also more likely to be involved in making or overseeing key corporate decisions that have the potential to affect the issuer's stock price, including decisions about the timing of the disclosure of such information.[37] In addition, applying a cooling-off period to issuers addresses the concern that issuers may conduct stock buybacks while aware of material nonpublic information. For example, executives of an issuer who are aware of materially positive but undisclosed developments can cause the issuer to buy its stock from current shareholders who are unaware of those developments. Once the development is publicly disclosed, the issuer's share price may increase. Further, once the issuer repurchase program is announced, executives who initiated the buyback can economically benefit because it may allow them to sell shares at prices strategically inflated by the company buyback, in addition to the disclosed developments.[38] A cooling off period for issuers would reduce the likelihood of such scenarios and promote investor confidence.

Request for Comment

1. Is the proposed cooling-off period an appropriate condition to the Rule 10b5–1(c)(1) affirmative defense for contracts, instructions and written plans? Would a cooling-off period effectively reduce the potential to abuse the rule, such as from selective termination of trades?

2. Should the application of a cooling-off period be limited to directors, officers (as defined in Rule 16a–1(f)) and issuers, as proposed? Should the proposed cooling-off period instead apply to all traders who rely on the Rule 10b5–1(c)(1) affirmative defense?

[31] *See* Rulemaking petition regarding Rule 10b5–1 Trading Plans, File No. 4–658 (Jan. 2, 2013) (''CII Rulemaking Petition'') at *https://www.sec.gov/rules/petitions/2013/petn4-658.pdf;* Alan D. Jagolinzer, David F. Larcker, and Daniel J. Taylor, ''How the SEC can and should fix insider trading rules'' the Hill (Dec. 17, 2020) at *https://thehill.com/opinion/finance/530668-how-the-sec-can-and-should-fix-insider-trading-rules;* IAC Recommendations, *supra* note 19.

[32] *See* proposed note to Rule 10b5–1(c); and 2000 Adopting Release, *supra* note 8, at 51718, n 111.

[33] *See* the discussion at *infra* Section IV.B.1.

[34] *See* IAC Recommendations, *supra* note 19 (recommending a cooling off period of four months); Gaming the System, *supra* note 16, at 3 (recommending a cooling off period of four to six months); SEC Targets 10b5–1 Plans, *supra* note 16 (recommendation from a law firm for a cooling off period of one fiscal quarter); letter from Senator Elizabeth Warren et al., *supra* note 14 (recommending a cooling off period of four to six months); Robert H. Friedman et al, *Navigating Public Company Equity Buybacks,* Insights: Corporate and Securities Law Advisor, (December 2011) (recommending a 30 day waiting period for issuers after a Rule 10b5–1(c)(1) plan's adoption or modification).

[35] Exchange Act Rule 16a–1(f) [17 CFR 240.16a–1(f)] provides that the ''officer'' is an issuer's president, principal financial officer, or principal accounting officer (or, if there is no such accounting officer, the controller), any vice-president of the issuer in charge of a principal business unit, division or function (such as sales, administration or finance), any other officer who performs a policy-making function, or any other person who performs similar policy-making functions for the issuer. Officers of the issuer's parent(s) or subsidiaries shall be deemed officers of the issuer if they perform such policy-making functions for the issuer.

[36] This would include anyone who performs a policy-making function for the issuer. *Id.*

[37] *See O'Hagan,* 521, U.S. at 651–52; *Chiarella,* 445 U.S. at 227; *Steginsky* v. *Xcelera Inc.,* 741 F.3d 365, 370 n.5 (2d Cir. 2014). *See also, Colby* v. *Klune,* 178 F.2d 872 (2d Cir. 1949).

[38] *See* Fried Testimony *supra* note 17.

3. Is the Rule 16a–1(f) definition the appropriate definition of ''officer'' for purposes of the proposed amendment? Are there other corporate insiders or employees who also should be subject to the cooling-off period?

4. Is the proposed 120-day cooling-off period appropriate for directors and officers? Should we require a shorter or longer cooling-off period? For example, should we require a cooling-off period of sixty days after the adoption of a new/modified trading arrangement or a cooling-off period of 180 days?

5. Is the proposed 30-day cooling off period appropriate for issuers? Would a different period be more appropriate? For example, would a 60-day, 90-day, or 180-day cooling off period be more appropriate for issuers relying on the 10b5–1(c)(1) affirmative defense? If issuers were subject to the proposed requirements, how would their use of Rule 10b5–1(c)(1) trading arrangements to conduct share repurchases be affected? Would the proposed cooling-off period affect existing practices regarding when a repurchase window is ''open'' or ''closed''?

6. Should we define ''modify'' or ''a modification'' for purposes of Rule 10b5–1(c)? If so, how should we define these terms?

7. Should there be an exception from the cooling-off period for *de minimis* changes to a Rule 10b5–1(c) trading arrangement? If so, what should be the parameters of such an exception?

2. Director and Officer Certifications

We also are proposing to amend Rule 10b5–1(c)(1)(ii) to impose a certification requirement as a condition to the affirmative defense. Under the proposed amendment, if a director or officer (as defined in Rule 16a–1(f)) of the issuer of the securities adopts a Rule 10b5–1 trading arrangement, as a condition to the availability of the affirmative defense, such director or officer would be required to promptly furnish to the issuer a written certification, described below, at the time of the adoption of a new/modified trading arrangement.[39]

The certification would require a director or officer to certify at the time of the adoption of the trading arrangement:

- That they are not aware of material nonpublic information about the issuer or its securities; and
- That they are adopting the contract, instruction, or plan in good faith and not as part of a plan or scheme to evade the prohibitions of Exchange Act Section 10(b) and Exchange Act Rule 10b–5.

For purposes of the proposed amendment, the term ''officer'' would have the same meaning as the definition for ''officer'' contained in Exchange Act Rule 16a–1(f). The definition in Exchange Act Rule 16a–1(f) is appropriate for the reasons discussed above with respect to the cooling-off period, *i.e.,* these individuals are more likely to be aware of material nonpublic information regarding the issuer and its securities, as well as more likely to be involved in making or overseeing corporate decisions about whether and when to disclose information.

The proposed certification requirement is intended to reinforce directors' and officers' cognizance of their obligation not to trade or adopt a trading plan while aware of material nonpublic information, that it is their responsibility to determine whether they are aware of material non-public information when adopting Rule 10b5–1 plans, and that the affirmative defense under Rule 10b5–1 requires them to act in good faith and not to adopt such plans as part of a plan or scheme to evade the insider trading laws.

We recognize that this certification involves important considerations, especially because directors and officers are often aware of material nonpublic information. Subject to their confidentiality obligations, directors and officers can consult with experts to determine whether they can make this representation truthfully. Legal counsel can assist directors and officers in understanding the meaning of the terms ''material'' and ''nonpublic information.''[40] However, the issue of whether a director or officer has material nonpublic information is an inherently fact-specific analysis. Thus, a director or officer's completion of this certification would reflect their personal determination that they do not have material nonpublic information.

The proposed amendment also includes an instruction that a director or officer seeking to rely on the affirmative defense should retain a copy of the certification for a period of ten years.[41] The proposed amendments would not require a director, officer, or the issuer to file the certification with the Commission. The proposed certification would not be an independent basis of liability for directors or officers under Exchange Act Section 10(b) and Rule 10b–5. Rather the proposed certification would underscore the certifiers' awareness of their legal obligations under the Federal securities law related to the trading in the issuer's securities.[42]

Request for Comment

8. Is the proposed certification requirement an appropriate condition to the availability of the Rule 10b5–1(c)(1)(ii) affirmative defense for directors and officers? Are there other ways that an officer or director could demonstrate that they do not possess material nonpublic information when adopting a trading arrangement?

9. Is the proposed language of the certification appropriate? If not, what alternative formulation, would be more

[39] The proposed amendment would not require these personal certifications where a director or officer terminates an existing Rule 10b5–1 trading arrangement and does not adopt a new/modified trading arrangement for which the affirmative defense is sought. However, proposed Item 408 of Regulation S–K would require registrants to disclose whether any director or officer has terminated a Rule 10b5–1 trading arrangement (or any similar trading arrangement). *See infra* Section II.B.1. An issuer's insider trading policies and procedures may otherwise govern such plan terminations. *See infra* at Section II.B.2. Finally, whether an inference can be drawn that an individual unlawfully traded on the basis of inside information may be informed by the manner in which they trade (*see, e.g., SEC* v. *Warde,* 151 F.3d, 42, 47 (2d Cir. 1998), including where termination of a Rule 10b5–1 trading arrangement is soon followed by non-Rule 10b5–1 trades in the same security or issuer.

[40] As we have said previously, we rely on existing definitions of the terms ''material'' and ''nonpublic'' established in the case law. Information is material if ''there is a substantial likelihood'' that its disclosure ''would have been viewed by the reasonable investor as having significantly altered the 'total mix' of information made available.'' *see Basic* v. *Levinson,* 485 U.S. 224, 231 (1988) (materiality with respect to contingent or speculative events will depend on a balancing of both the indicated probability that the event will occur and the anticipated magnitude of the event in light of the totality of company activity); *see also TSC Industries, Inc.* v. *Northway, Inc.,* 426 U.S. 438, 449 (1976); Securities Act Rule 405 [17 CFR 230.405]; 17 CFR 240.12b–2 [Exchange Act Rule 12b–2] Information is nonpublic until the information is broadly disseminated in a manner sufficient to ensure its availability to the investing public generally, without favoring any special person or group. *See Dirks* v. *SEC,* 463 U.S. 646, 653–54 & n.12 (1983); *Texas Gulf Sulphur,* 401 F.2d 833, 854 (2d Cir. 1968), *cert. denied,* 394 U.S. 976 (1969); 17 CFR 243.101(e) [Regulation FD]. For purposes of insider trading law, insiders must wait a ''reasonable'' time after disclosure before trading. What constitutes a reasonable time depends on the circumstances of the dissemination. *In re Faberge, Inc.,* 45 SEC. 249, 255 (1973), *citing Texas Gulf Sulphur,* 401 F.2d at 854. Under the misappropriation doctrine, a recipient of inside information must make a ''full disclosure'' to the sources of the information that they plan to trade on or tip the information within a reasonable time before doing so. *O'Hagan,* 521 U.S. at 655, 659 n.9; *see also SEC* v. *Rocklage,* 470 F.3d 1, 11–12 (1st Cir. 2006).

[41] *See* Proposed instruction to Rule 10b5–1(c)(1)(ii)(C). We have included a ten-year retention period in consideration of the statutes of limitations that govern the Commission's ability to seek certain remedies for insider trading claims. *See* Exchange Act Section 21(d)(8) [15 U.S.C. 78u(d)(8)] (ten years for injunctions and disgorgement of fraud proceeds).

[42] *See, e.g., O'Hagan,* 521, U.S. at 651–52; *Chiarella,* 445 U.S. at 227; *Steginsky* v. *Xcelera Inc.,* 741 F.3d 365, 370 n.5 (2d Cir. 2014).

appropriate? Should the certification contain different or additional conditions?

10. Should the proposed certification requirement also apply to individuals who are not ''officers'' under Exchange Rule 16a–1(f)?

11. The proposed instruction provides guidance that a director or officer should retain the certification for ten years consistent with the ten-year statutes of limitations that govern the Commission's insider trading actions. Should we instead require the issuer to retain the certification, either instead of or in addition to the director or officer? If so, how long should the issuer be required to retain the certification? Should we allow the individuals and issuers to develop their own retention policies for the certification?

12. Should we specifically provide in the proposed amendments to Rule 10b5–1(c)(1)(ii) that the certification does not establish an independent basis of liability for directors or officers under Exchange Act Section 10(b) and Rule 10b–5?

3. Restricting Multiple Overlapping Rule 10b5–1 Trading Arrangements and Single-Trade Arrangements

Currently, Rule 10b5–1(c)(1)(i)(C) provides that a person will not be entitled to the affirmative defense for a trade if they enter into or alter a ''corresponding or hedging transaction or position'' with respect to the planned transactions. In the Rule 10b5–1 proposing release, the Commission explained that this requirement was designed to prevent persons from devising schemes to exploit inside information by setting up pre-existing hedged trading programs, and then canceling execution of the unfavorable side of the hedge, while permitting execution of the favorable transaction.[43] The use of multiple trading arrangements can be used to simulate this kind of impermissible hedging.

As discussed above, currently, a person can adopt and employ multiple overlapping Rule 10b5–1(c)(1) trading arrangements and exploit inside information by setting up trades timed to occur around dates on which they expect the issuer will likely release material nonpublic information. We are also concerned that a person could circumvent the proposed cooling-off period by setting up multiple overlapping Rule 10b5–1(c)(1) trading arrangements, and deciding later which trades to execute and which to cancel after they become aware of material nonpublic information but before it is publicly released. We are proposing to amend Rule 10b5–1(c)(1) to eliminate the affirmative defense for any trades by a trader who has established multiple overlapping trading arrangements for open market purchases or sales of the same class of securities. Under the proposed amendment, the affirmative defense would not be available for trades under a trading arrangement when the trader maintains another trading arrangement, or subsequently enters into an additional overlapping trading arrangement, for open market purchases or sales of the same class of securities. The proposed restriction with respect to multiple overlapping Rule 10b5–1(c)(1) trading arrangements is designed to eliminate the ability of traders to use multiple plans to strategically execute trades based on material nonpublic information and still claim the protection of an affirmative defense for such trades.

The proposed amendment would not apply to transactions where a person acquires (or sells) securities directly from the issuer, such as acquiring shares through participation in employee stock ownership plans (''ESOPs'') or dividend reinvestment plans (''DRIPs''), which are not executed by the director or officer on the open market. Participation in these programs is sometimes effected through Rule 10b5–1(c)(1) trading arrangements, and because the transactions are directly with the issuer, they are less likely to give rise to insider trading.[44] This provision is intended to preserve the benefits of flexibility for plan participants with respect to such plans.

In addition to restricting the use of multiple overlapping trading arrangements, we are also proposing to amend Rule 10b5–1(c)(1)(ii) to limit the availability of the affirmative defense for a trading arrangement designed to cover a single trade, so that the affirmative defense would only be available for one single-trade plan during any 12-month period. Under the proposed amendment, the affirmative defense would not be available for a single-trade plan if the trader had, within a 12-month period, purchased or sold securities pursuant to another single-trade plan. Recent research indicates that single–trade plans are consistently loss avoiding and often precede stock price declines.[45] This research suggests that insiders using single-trade plans may be executing trades based on material nonpublic information. At the same time, we recognize the legitimate use of single–trade plans to address one-time liquidity needs. The proposed limitation on single-trade plans is intended to balance this legitimate use against potential for abuse.

Request for Comment

13. Are there legitimate uses of multiple, overlapping Rule 10b5–1 trade arrangements? If so, what are they? Is it appropriate to exclude from the affirmative defense multiple concurrent trading arrangements for open market purchases or sales of the same class of securities as proposed? Would the proposal create incentives for corporate insiders to own different classes of stock? Are there alternative approaches to addressing the concerns with multiple trading arrangements discussed above?

14. Is the proposed amendment sufficiently clear as to what types of overlapping trading arrangements a trader can maintain, while still preserving the availability of the Rule 10b5–1(c)(1) affirmative defense? If not, how could additional clarity be provided? In particular, how would the proposed exclusion affect current practices with respect to tax qualified retirement savings plans, and tax withholding transactions with respect to equity compensation arrangements, such as stock options and restricted stock units?

15. Is it appropriate to limit the availability of the Rule 10b5–1(c)(1) affirmative defense for single-trade plans as proposed? If not, are there alternative approaches to addressing concerns about the potential abuse of single-trade plans? Would the proposed cooling-off periods sufficiently mitigate the potential to misuse single-trade plans to execute trades based on material nonpublic information? Alternatively, would the limited availability of the Rule 10b5–1(c)(1) affirmative defense for single-trade plans as proposed still allow for potential abuse? Should we consider prohibiting the use of single-trade plans entirely?

[43] *See Selective Disclosure and Insider Trading,* Release No. 33–7787 (Dec. 20, 1999) [64 FR 72590 (Dec. 28, 1999)].

[44] However, ''fiduciaries'' of employee stock ownership plans should consider the extent to which ''refraining on the basis of inside information from making a planned trade . . . could conflict with the complex insider trading . . . requirement imposed by the federal securities laws or with the objectives of those laws.'' *See Fifth Third Bancorp* v. *Dudenhoeffer,* 573 U.S. 409, 429 (2014). Officers and directors also need to follow Regulation Blackout Trading Restrictions, 17 CFR 245.100–245.104.

[45] *See* Gaming the System, *supra* note 16. *See also infra* Section IV.B.

4. Requiring That Trading Arrangements Be Operated in Good Faith

As discussed above, the Rule 10b5–1 affirmative defense is only available if a trading arrangement was entered into in good faith and not as part of a plan or scheme to evade the prohibitions of the rule. The ability to trade on the basis of material nonpublic information through a Rule 10b5–1(c)(1) trading arrangement may incentivize corporate insiders to improperly influence the timing of corporate disclosures to benefit their trades under the trading arrangement, for example, by delaying or accelerating the release of material nonpublic information.[46] We are concerned that a trading arrangement may be canceled or modified in an attempt to evade the prohibitions of the rule without affecting the availability of the affirmative defense.

We are also concerned that a corporate insider, after entering into a Rule 10b5–1(c)(1) trading arrangement, may improperly influence the timing of the announcement of material nonpublic information in a way that benefits a planned trade under their trading arrangement. To address these concerns, we are proposing to amend Rule 10b5–1(c)(1)(ii) to add the condition that a contract, instruction, or plan be ''operated'' in good faith. Amending the condition that a Rule 10b5–1 trading arrangement be entered into in good faith to further require that the trading arrangement also be operated in good faith would help deter fraudulent and manipulative conduct and enhance investor protection throughout the duration of the trading arrangement. The proposed amendment is intended to make clear that the affirmative defense would not be available to a trader that cancels or modifies their plan in an effort to evade the prohibitions of the rule or uses their influence to affect the timing of a corporate disclosure to occur before or after a planned trade under a trading arrangement to make such trade more profitable or to avoid or reduce a loss.

Request for Comment

16. Would the addition of ''and operated'' to the good faith requirement in Rule 10b5–1(c)(1)(ii), as proposed, have a meaningful impact? If not, what are alternative approaches that would address the concern over the manipulation of the timing of corporate disclosures to benefit a trade under a Rule 10b5–1(c)(1) trading arrangement?

17. Is there evidence to suggest that corporate insiders influence the timing of corporate disclosures to benefit their trades under a Rule 10b5–1 trading arrangement? Is there evidence to suggest that any efforts to time corporate disclosures would not be sufficiently mitigated by the 120-day cooling-off period?

18. Is the term ''operated'' or the concept of ''operated in good faith'' sufficiently clear as to the conduct it is meant to describe? If not, should we provide additional guidance as to its meaning in this context? Should we define the phrase ''entered into and operated in good faith''? If so, how should it be defined?

19. Is there another formulation that would better address the underlying policy concern of an insider improperly influencing the timing of the release of material nonpublic information to benefit a trade under a Rule 10b5–1 trading arrangement?

20. Does requiring the trading arrangements to be operated in good faith create incentives for corporate insiders to take into account their existing Rule 10b5–1 trading arrangements when making decisions with respect to the timing of corporate disclosures?

B. Additional Disclosures Regarding Rule 10b5–1 Trading Arrangements

Currently, there are no mandatory disclosure requirements concerning the use of Rule 10b5–1 trading arrangements or other trading arrangements by companies or insiders.[47] The lack of comprehensive public information about the use of these arrangements by officers, directors, and issuers—whether pursuant to Rule 10b5–1(c)(1) trading arrangement or otherwise—deprives investors of the ability to assess whether those parties may be misusing their access to material nonpublic information. This lack of transparency may be allowing improper trading to go undetected and undermining the deterrent impact of our insider trading laws. In addition, the lack of public information about the use of these arrangements by companies and corporate insiders limits investors' ability to assess potential incentive conflicts and information asymmetries when making investment and voting decisions. Requiring more robust disclosure of particular trading arrangements should reduce potential abuse of the rule, and inform investors and the Commission regarding potential violations of Rule 10b–5.

Currently, issuers are not required to disclose their insider trading policies or procedures. We believe that information about insider trading policies and procedures is important and would help investors to understand and assess how the registrant protects material nonpublic information from misuse. While codes of ethics may address insider trading issues, they often lack the detail necessary for investors to assess actual practices surrounding potential insider trading. Accordingly, we are proposing new Item 408 under Regulation S–K and corresponding amendments to Forms 10–Q and 10–K to require: (1) Quarterly disclosure of the use of Rule 10b5–1 and other trading arrangements by a registrant, and its directors and officers for the trading of the issuer's securities; and (2) annual disclosure of a registrant's insider trading policies and procedures. We are also proposing new Item 16J to Form 20–F to require annual disclosure of a foreign private issuer's insider trading policies and procedures. In addition, we are proposing amendments to Forms 4 and 5 to require insiders to identify whether a reported transaction was executed pursuant to a Rule 10b5–1(c) trading arrangement.

The proposed disclosures that would be required in Forms 10–Q, 10–K, and Form 20–F would be subject to the certifications required by Section 302 of the Sarbanes-Oxley Act of 2002.[48] Section 302 requires an issuers' principal executive officer and principal financial officer to certify, among other things, that based on their knowledge, the Form 10–K, Form 10–Q, or Form 20–F that they have signed does not contain untrue statements of material facts or omit to state material facts necessary to make the statements made, in light of the circumstances under which such statements were made, not misleading with respect to the periods covered by the reports.[49]

[46] *See infra* note 106 and accompanying text.

[47] Form 144 (17 CFR 239.144) under the Securities Act contains a representation that is used by a filer of the form to indicate whether such person has adopted a written trading plan or given trading instructions to satisfy Rule 10b5–1. Form 144 is a notice form that must be filed with the Commission by an affiliate of an issuer who intends to resell restricted or ''control'' securities of that issuer in reliance upon 17 CFR 230.144 (Securities Act Rule 144). In 2002, the Commission proposed amendments to Form 8–K that, among other things, would have required registrants to report on the form any adoption, modification or termination of a Rule 10b5–1 trading arrangement by any director and certain officers of the registrant. *See Form 8–K Disclosure of Certain Management Transactions,* Release No. 33–8090 (Apr. 12, 2002) [67 FR 19914 (Apr. 23, 2002)].

[48] Public Law 107–204, 116 Stat. 745 (2002).

[49] In effectuating this statutory responsibility, the principal executive and financial officers of an issuer may be aided by a written representation (such as a sub-certification) from the issuer's principal legal or compliance officer (or person

Continued

1. Quarterly Reporting of Rule 10b5–1(c) and Non-Rule 10b5–1(c) Trading Arrangements

Currently, issuers are not required to disclose trading arrangements by directors, officers, or the issuer itself when conducting a share buyback. Nor are issuers required to disclose terminations of, including modifications to, trading arrangements previously adopted by directors, officers, or the issuer itself. The disclosure of such information would allow investors to assess the extent to which directors, officers, and the issuer are adopting or terminating such trading arrangements during periods when they may be aware of material nonpublic information. Proposed Item 408(a) of Regulation S–K would require registrants to disclose:

- Whether, during the registrant's last fiscal quarter (the registrant's fourth fiscal quarter in the case of an annual report), the registrant has adopted or terminated any contract, instruction or written plan to purchase or sell securities of the registrant, whether or not intended to satisfy the affirmative defense conditions of Rule 10b5–1(c), and provide a description of the material terms of the contract, instruction or written plan, including:
  - The date of adoption or termination;[50]
  - The duration of the contract, instruction or written plan; and
  - The aggregate amount of securities to be sold or purchased pursuant to the contract, instruction or written plan.
- Whether, during the registrant's last fiscal quarter, any director or officer has adopted or terminated any contract, instruction or written plan for the purchase or sale of equity securities of the registrant, whether or not intended to satisfy the affirmative defense conditions of Rule 10b5–1(c), and provide a description of the material terms of the contract, instruction or written plan, including:
  - The name and title of the director or officer;
  - The date on which the director or officer adopted or terminated the contract instruction or written plan;
  - The duration of the contract instruction or written plan; and
  - The aggregate number of securities to be sold or purchased pursuant to the contract, instruction or written plan.

We are proposing to require these disclosures in Form 10–Q and Form 10–K. Under the proposal, a registrant would be required to provide this disclosure if during the quarterly period covered by the report, the registrant, or any director or officer who is required to file reports under Section 16 of the Exchange Act, adopted or terminated a Rule 10b5–1(c) trading arrangement. Such disclosures would allow investors to assess whether, and if so, how, issuers monitor trading by their directors and officers for compliance with insider trading laws and whether their compliance programs are effective at preventing the misuse of material nonpublic information.

We recognize that as a result of the proposed amendments some issuers, directors or officers may seek to execute sales or purchases through trading arrangements that do not satisfy the conditions of Rule 10b5–1(c)(1). For this reason, we are also proposing to require similar disclosures with respect to the adoption or termination of other pre-planned trading contracts, instructions, or plans (''non-Rule 10b5–1 trading arrangements'') through which the issuer, officer or directors seek to transact in issuer securities.

Requiring quarterly disclosure of the adoption or termination of a trading arrangement by a director, officer or the issuer provides important information that would better allow investors, the Commission, and other market participants to observe how these trading arrangements are being used. For example, disclosure of the termination (including a modification) of a trading arrangement by an officer, even in the absence of subsequent trading by the officer, could provide investors or the Commission with important information about the potential misuse of inside information if the termination coincides with the release of material nonpublic information by the issuer. Making information about these arrangements public may also serve as a deterrent against potential abuses of Rule 10b5–1(c)(1) trading arrangements or other trading arrangements by making those who use these arrangements more likely to focus on following the requirements applicable to such arrangements and compliance with Rule 10b–5. In addition, requiring disclosure of these events on a quarterly basis would present this disclosure to investors in a consolidated manner in a single document.

Request for Comment

21. Would the disclosures in proposed Item 408(a) provide useful information to investors and the markets? Does the proposed disclosure requirement specify all of the information that should be disclosed as to registrants' trading arrangements? Does the proposed disclosure requirement specify all of the information that should be disclosed as to trading arrangements of officers and directors? Are there other disclosures that we should require that would provide more transparency into the use of Rule 10b5–1 and non-Rule 10b5–1 trading arrangements? Is there any information that we have proposed to require be disclosed that we should not require? We are proposing disclosure about trading arrangements both for registrants and for officers and directors. Should we instead require disclosure about only one of those categories of traders? Should we consider requiring disclosure of trading arrangements of insiders who are not officers or directors? If so, at what level of specificity?

22. Would a description of the material terms of a trading arrangement encourage front-running of trades under the trading arrangement? Should the required disclosures be limited to particular terms of a trading arrangement?

23. Do registrants currently have access to information about a director's or officer's adoption or termination of a non-Rule 10b5–1 trading arrangement that would allow them collect and prepare this information for disclosure in a Form 10–Q in a timely fashion? If not, what would they need to do to collect and prepare this information for disclosure?

24. Is it appropriate to require disclosures regarding both Rule 10b5–1 trading arrangements and non-Rule 10b5–1 trading arrangements? Is the scope of the term ''non-Rule 10b5–1'' sufficiently clear? Should we define the term?

25. Is the proposal to require disclosure in Forms 10–Q and 10–K appropriate? Should we instead require disclosure in a different form? Should we consider a different frequency of disclosure?

26. The proposed Item 408(a) disclosure requirement would not apply to foreign private issuers that file annual reports using Form 20–F because such issuers are not required to file quarterly

performing similar functions) that, based on a reasonable review, they have determined the issuer's insider trading practices and procedures comport with what the issuer is disclosing about them in its periodic reports. However, it would not be reasonable for a principal executive or financial officer to rely on such a representation if they are aware of information that is inconsistent with, or raises doubts about the reliability of, the representation.

[50] As discussed above, we have proposed clarifying that any modification or amendment of an existing Rule 10b5–1 trading arrangement is the equivalent of terminating the existing arrangement and adopting a new arrangement. *See supra* note 23. Accordingly, the proposal would require a description of the modification.

reports on Form 10–Q. Should the proposed amendments apply to foreign private issuers or would the information be less useful if reported annually on Form 20–F?

2. Disclosure of Insider Trading Policies and Procedures

Well-designed policies and procedures that address the potential misuse of material nonpublic information can play an important role in deterring and preventing trading on the basis of material nonpublic information. Specific disclosures concerning registrants' insider trading policies and procedures would benefit investors by enabling them to assess registrants' corporate governance practices and to evaluate the extent to which those policies and procedures protect shareholders from the misuse of material nonpublic information. We are thus proposing to add new Item 408(b) to Regulation S–K, which would require registrants to:

- Disclose whether the registrant has adopted insider trading policies and procedures governing the purchase, sale, and other dispositions of the registrant's securities by directors, officers, and employees or the registrant itself that are reasonably designed to promote compliance with insider trading laws, rules, and regulations, and any listing standards applicable to the registrant. If the registrant has not adopted such insider trading policies and procedures, explain why it has not done so; and
- If the registrant has adopted insider trading policies and procedures, disclose such policies and procedures.

These disclosures would be required in a registrant's annual reports on Form 10–K and proxy and information statements on Schedules 14A and 14C.[51] Foreign private issuers would also be required to provide analogous disclosure in their annual reports pursuant to a new Item 16J in that form.

Currently, 17 CFR 232.406 (Item 406 of Regulation S–K) requires a registrant to disclose whether it has adopted a code of ethics that applies to its principal executive officer, chief financial officer, and other appropriate executives and, if it has not adopted such a code, to state why it has not done so.[52] Many registrants are required to maintain codes of ethics or conduct under exchange listing standards.[53] These codes may contain specific policies and restrictions that address insider trading.[54] Apart from these codes of ethics or conduct, some registrants have other policies and procedures specifically addressing insider trading. The proposed amendments are designed to provide investors with meaningful information regarding a registrant's insider trading policies and procedures to enable them to better assess the manner in which the registrant promotes compliance with insider trading laws and protects material nonpublic information from misuse.

We recognize that insider trading policies and procedures may vary from company to company and that decisions as to specific provisions of the policies and procedures are best left to the company. Therefore, the proposed amendments do not specify all details that a registrant should address in its insider trading policies, nor do they prescribe any specific language that such policies must include (although this release does include some guidance as to the appropriate subject matter below). We also recognize that registrant's existing code of ethics may contain insider trading policies. In this case, the registrant, could cross-reference to the particular components of its code of ethics that constitute insider trading policies and procedures in response to proposed Item 408(b)(2).

When making disclosure about their insider trading policies and procedures under proposed Item 408(b)(2), registrants should endeavor to provide detailed and meaningful information from which investors can assess the sufficiency of their insider trading policies and procedures. For example investors may find useful, to the extent it is included in the issuer's relevant policies and procedures, information on the issuer's process for analyzing whether directors, officers, employees, or the issuer itself when conducting an open-market share repurchase have material nonpublic information; the issuer's process for documenting such analyses and approving requests to purchase or sell its securities; or how the issuer enforces compliance with any such policies and procedures it may have. Furthermore, the disclosure under proposed Item 408 could address not only policies and procedures that apply to the purchase and sale of the registrant's securities, but also other dispositions of the issuer's securities where material nonpublic information could be misused such as, for example, through gifts of such securities.[55]

Request for Comment

27. Would the proposed disclosure requirements regarding a registrant's insider trading policies and procedures or lack thereof provide useful information to investors? Is there other information that would be useful to include in Item 408(b)?

28. Is the proposed scope of the term ''insider trading policies and procedures'' sufficiently clear? Should we more specifically define the term? Are there other elements or objectives of an insider trading policy or procedure that should be included in the proposed Item?

29. Should the Item 408(b) disclosure be required in Schedules 14A and 14C, as proposed?

30. Should foreign private issuers be required to provide disclosure of their insider trading policies and procedures? Are any modifications to the proposed disclosure requirement appropriate to recognize the different legal regimes in which foreign private issuers may operate?

3. Structured Data Requirements

We are proposing to require registrants to tag the information specified by Item 408 in Inline XBRL in accordance with Rule 405 of Regulation S–T (17 CFR 232.405) and the EDGAR

[51] Item 1 of Schedule 14C requires that a registrant furnish the information called for by all of the items of Schedule 14A (other than Items 1(c), 2, 4 and 5) which would be applicable to any matter to be acted upon at the meeting if proxies were to be solicited in connection with the meeting.

[52] *See also* Section 406 of the Sarbanes-Oxley Act of 2002 (''SOX''), 15 U.S.C. 7264.

[53] *See e.g.,* NYSE Listed Company Manual Section 303A.10, which states in relevant part that every NYSE ''listed company should proactively promote compliance with laws, rules and regulations, including insider trading laws. Insider trading is both unethical and illegal, and should be dealt with decisively.'' *See also* NASDAQ Listing Rule 5610 that requires every Nasdaq listed company to adopt a code of conduct that must comply with the definition of a ''code of ethics'' set out in SOX Section 406 (c) and that must apply to all directors, officers, and employees.

[54] Insider trading policies and procedures may be part of the standards that are reasonably necessary to promote: Honest and ethical conduct, including the ethical handling of actual or apparent conflicts of interest between personal and professional relationships; full, fair, accurate, timely, and understandable disclosure in the periodic reports required to be filed by the issuer; and compliance with applicable governmental rules and regulations. *See* 15 U.S.C. 7264(c); *see also supra* Section I.

[55] The Exchange Act does not require that a ''sale'' of securities be for value, and instead provides that the ''terms 'sale' or 'sell' each include any contract to sell or otherwise dispose of.'' Exchange Act Section 3(a)(14) [15 U.S.C. 78c(a)(14)] *compare with* Securities Act Section 2(a)(3) [15 U.S.C. 77b(a)(3)] (''the terms 'sale' or 'sell' shall include every contract of sale or disposition of a security or interest in a security, for value.''). For example, a donor of securities violates Exchange Act Section 10(b) if the donor gifts a security of an issuer in fraudulent breach of a duty of trust and confidence when the donor was aware of material nonpublic information about the security or issuer, and knew or was reckless in not knowing that the donee would sell the securities prior to the disclosure of such information. The affirmative defense under Rule 10b5–1(c)(1) is available for planned securities gifts.

Filer Manual.[56] The proposed requirements would include block text tagging of narrative disclosures, as well as detail tagging of quantitative amounts disclosed within the narrative disclosures. Inline XBRL is both machine-readable and human-readable, which improves the quality and usability of XBRL data for investors.[57]

Requiring Inline XBRL tagging of the disclosures provided pursuant to Item 408 would benefit investors by making the disclosures more readily available and easily accessible to investors, market participants, and others for aggregation, comparison, filtering, and other analysis, as compared to requiring a non-machine readable data language such as ASCII or HTML. This would enable automated extraction and analysis of the granular data required by the proposed rules, allowing investors and other market participants to more efficiently perform large-scale analysis and comparison of this information across issuers and time periods. For narrative disclosures, an Inline XBRL requirement would allow investors to extract and search for disclosures about a registrant's insider trading policies and procedures (rather than having to manually run searches for these disclosures through entire documents), automatically compare/redline these disclosures against prior periods, and perform targeted AI/ML assessments of specific narrative disclosures rather than the entire unstructured document. At the same time, we do not expect the incremental compliance burden associated with tagging the additional information to be unduly burdensome, because issuers subject to the proposed tagging requirements are for the most part subject to similar Inline XBRL requirements in other Commission filings.

Request for Comment

31. Should we require issuers to tag the disclosures required by Item 408 of Regulation S–K in Inline XBRL, as proposed? Are there any changes we should make to ensure accurate and consistent tagging? If so, what changes should we make?

32. Should we modify the scope of the disclosures required to be tagged? Should the narrative disclosure about a registrant's insider policies and procedures be tagged using Inline XBRL, as proposed?

33. Should we require issuers to use a different structured data language to tag these disclosures? If so, what structured data language should we require?

34. Are there any issuers, such as smaller reporting companies, emerging growth companies or foreign private issuers that we should exempt from the tagging requirement? If so, how would investors in such issuers receive the information that they need to make informed decisions regarding these issuers?

4. Identification of Rule 10b5–1(c) and Non-Rule 10b5–1(c)(1) Transactions on Forms 4 and 5

Section 16(a) of the Exchange Act provides that every person who beneficially owns, directly or indirectly, more than 10 percent of any class of equity security (other than an exempted security) registered pursuant to Exchange Act Section 12, or who is an officer or director of the issuer of such security, shall file with the Commission an initial report disclosing the amount of all equity securities of such issuer of which the insider is the beneficial owner, and a subsequent transaction report to disclose any changes in beneficial ownership. Section 16 of the Exchange Act was designed to provide the public with information on securities transactions and holdings of corporate officers, directors, and principal shareholders, and to deter those individuals from seeking to profit from short-term trading in the securities of their corporations while in possession of material, nonpublic information.[58]

Persons subject to Section 16 reporting must disclose changes in their beneficial ownership on Form 4 or 5. Exchange Act Rule 16a-3(g)[59] provides that a reporting person must report specified changes in beneficial ownership on Form 4 before the end of the second business day following the date of execution of the transaction. In December 2020, the Commission proposed, among other things, amendments to Form 4 and Form 5[60] to add a checkbox to these forms that would permit filers, at their option, to indicate whether a transaction reported on the form was made pursuant to a contract, instruction, or written trading plan for the purchase or sale of equity securities of the issuer that satisfies the conditions of Rule 10b5–1(c).[61] In the December 2020 Proposing Release, the Commission noted that many Form 4 and Form 5 filers voluntarily provide additional disclosure in these forms stating that a reported transaction satisfied the affirmative defenses conditions of Rule 10b5–1(c). The Commission indicated that the checkbox option would provide filers with a more efficient method to disclose this information.

In response to the December 2020 Proposing Release, the Commission received feedback from several commenters who asserted, based on analyses of sales of securities executed under Rule 10b5–1 trading arrangements, that many of these transactions were likely made on the basis of material nonpublic information.[62] These commenters recommended that the proposed Rule 10b5–1 checkbox disclosure be mandatory on Forms 4 and 5 because such disclosure would help investors and the public better discern whether Rule 10b5–1 trading arrangements are being used to engage in opportunistic trading on the basis of inside information.[63]

In consideration of this feedback, we are proposing to add a Rule 10b5–1(c) checkbox as a mandatory disclosure requirement on Forms 4 and 5. The checkbox would require a Form 4 or 5 filer to indicate whether a sale or purchase reported on that form was made pursuant to a Rule 10b5–1(c) trading arrangement. Filers would also be required to provide the date of

[56] This tagging requirement would be implemented by including a cross-references to Rule 405 of Regulation S–T in proposed Item 408(a)(3) and Item 408(b)(3), and by revising Rule 405(b) of Regulation S–T [17 CFR 232.405(b)] to include the Item 408 disclosure. In conjunction with the EDGAR Filer Manual, Regulation S–T governs the electronic submission of documents filed with the Commission. Rule 405 of Regulation S–T specifically governs the scope and manner of disclosure tagging requirements for operating companies and investment companies, including the requirement in Rule 405(a)(3) to use Inline XBRL as the specific structured data language to use for tagging the disclosures.

[57] *See Inline XBRL Filing of Tagged Data,* Securities Act Release No. 10514 (June 28, 2018) [83 FR 40846 (Aug. 16, 2018)]. Inline XBRL allows filers to embed XBRL data directly into an HTML document, eliminating the need to tag a copy of the information in a separate XBRL exhibit. Inline XBRL is both human-readable and machine-readable for purposes of validation, aggregation, and analysis. *Id.* at 40851.

[58] See Ownership Reports and Trading By Officers, Directors and Principal Security Holders, Release No. 34–28869 (Feb. 8, 1991) [56 FR 7242 (Feb. 21, 1991)].

[59] 17 CFR 240.16a–3(g).

[60] Form 5 is a year-end report to be used by any person who was an officer, director or a 10% beneficial owner during any portion of the issuer's fiscal year to disclose transactions and holdings that are exempt from Section 16(b) or that were required to be reported during the fiscal year, but were not.

[61] *See Rule 144 Holding Period and Form 144 Filings,* Release No. 33–10911 (Dec. 22, 2020) [86 FR 5063 (Jan. 19, 2021)] (''December 2020 Proposing Release'').

[62] *See* letters from Council of Institutional Investors (dated Mar. 18, 2021), Alan Jagolinzer (dated Mar. 10, 2021), and David Larcker *et al.* (dated Mar. 10, 2021), available at *https://www.sec.gov/comments/s7-24-20/s72420.htm.*

[63] *Id.*

adoption of the Rule 10b5–1 trading arrangement, and would have the option to provide additional relevant information about the reported transaction. Requiring this disclosure on Forms 4 and 5 would provide greater transparency around the use of Rule 10b5–1 plans and would be consistent with the primary purpose of Exchange Act Section 16.[64] It also would provide information that could be used by registrants to comply with their Item 408 disclosure obligations.

In addition, we are proposing to add a second, optional checkbox to both of Forms 4 and 5. This optional checkbox would allow a filer to indicate whether a transaction reported on the form was made pursuant to a pre-planned contract, instruction, or written plan that is not intended to satisfy the conditions of Rule 10b5–1(c).

Request for Comment

35. Should we add a mandatory checkbox on Forms 4 and 5 to indicate whether a sale or purchase was made pursuant to a Rule 10b5–1(c) plan? Should we require disclosure of the date of adoption of the Rule 10b5–1 plan? Would the Rule 10b5–1(c) checkbox and disclosure of the date of adoption of the plan help provide useful information about whether a Rule 10b5–1 plan was being used to engage in opportunistic trading based on material nonpublic information? Are there alternative methods of providing this information that we should consider?

36. Should we add an optional checkbox on Forms 4 and 5 to indicate that a sale or purchase reported on these forms was made pursuant to a contract, instruction or written plan that did not satisfy the conditions of Rule 10b5–1(c), as proposed? Would such an affirmative indication provide useful information to investors and market participants? Are filers already sufficiently able to provide this information elsewhere if they choose to do so? If so, should we make the use of the checkbox mandatory?

C. Disclosure Regarding the Timing of Option Grants and Similar Equity Instruments Shortly Before or After the Release of Material Nonpublic Information

Since the enactment of the Securities Act and the Exchange Act, the Commission has sought to enhance its rules regarding the disclosure of executive and director compensation and to improve the presentation of this information to investors.[65] One area of focus for the Commission has been disclosure related to equity-based compensation. Many companies use stock options as a form of compensation for their employees and executives.[66] In a simple stock option award, a company may grant an employee the right to purchase a specified number of shares of the company's stock at a specified price, called the exercise price, which is typically set as the fair market value of the company's stock on the grant date. Stock options with exercise prices at or above the fair market value of the underlying stock are designed to motivate the recipient to work towards increasing company value, because the option holder would only benefit if the company's stock price exceeds the exercise price at the time of exercise.[67]

In 2006, the Commission revised its executive compensation disclosure rules to, among other things, provide investors a more complete picture of compensation to principal executive officers, principal financial officers, and the other highest paid executive officers and directors.[68] In the 2006 Executive Compensation Release, the Commission stated that under the principles-based compensation disclosure requirements of Item 402 of Regulation S–K, registrants may be required to disclose in their Compensation Discussion and Analysis (''CD&A'') information about the timing of option grants in close proximity to the release of nonpublic information by the company.[69] Such disclosure should include, for example, whether a company is aware of material nonpublic information that is likely to result in an increase of its stock price, such as a product development announcement or positive earnings, and grants stock options immediately before the release of this information. Timing option grants to occur immediately before the release of positive material nonpublic information (''spring-loading'') can benefit executives with an option award that will likely be in-the-money as soon as the material nonpublic information is made public.[70] Alternatively, if a company is aware of material nonpublic information that is likely to decrease its stock price, it may decide to delay a planned option award until after the release of such information (''bullet-dodging'').[71]

In the release, the Commission noted that the existence of a program, plan or practice to select option grant dates for executive officers in coordination with the release of material nonpublic information would be material to investors and should be fully disclosed.[72]

We are concerned, however, that our existing disclosure requirements do not provide investors with adequate information regarding an issuer's policies and practices on stock option awards timed to precede or follow the release of material nonpublic information. Under our current executive compensation disclosure rules, compensation-related equity interests (including options, restricted stock, and similar grants) are required to be presented in a tabular format and accompanied by appropriate narrative disclosure necessary for an understanding of the information presented in a table. Option grants that are spring-loaded or bullet-dodging are not required to be separately identified in these tables. Consequently, investors may not have a clear picture of the effect of an option award that is made close in time to the release of material nonpublic information on the executives' or directors' compensation and on the company's financial statements. Understanding that issuers may have reasons for granting these types of options, but that increased transparency may be warranted, we are proposing amendments that would require registrants to disclose in a new table any option awards to named executive officers[73] or directors that are made

[64] *See* S. Rep. No. 1455, 73d Cong., 2d Sess. 55 (1934).

[65] *See, e.g., Executive Compensation and Related Person Disclosure,* Release No. 33–8732A (Aug. 29, 2006) [71 FR 53158 at 53160, n. 45 (Sept. 8, 2006)] (hereinafter ''2006 Executive Compensation Release''); *Proxy Disclosure Enhancements,* Release No. 33–9089 (Dec, 16, 2009) [74 FR 68334 (Dec. 24, 2009)].

[66] The term ''option'' includes stock options, SARs and similar instruments with option-like features. *See* 17 CFR 229.402(a)(6).

[67] When the exercise price for an option is less than the fair market value of the underlying security, the option is ''in the money.'' If the exercise price and fair market value are the same, the option is ''at the money.'' If the exercise price is greater than the fair market value, the option is ''out of the money.''

[68] 2006 Executive Compensation Release, *supra* note 65, at 53164.

[69] *See* 17 CFR 229.402(b)(2)(iv) and 2006 Executive Compensation Release, *supra* note 65, at 53163–4.

[70] *See* Lucian A. Bebchuk and Jesse M. Fried, *Paying for Long-Term Performance,* 158 U. Pa. L. Rev. 1915, 1937–39 & n. 63 (2010) (noting that the practice of spring-loading may also disguise an in-the-money option award as having been granted at-the-money).

[71] *See* Allan Horwich, *The Legality of Opportunistically Timing Public Company Disclosures in the Context of SEC Rule 10b5–1,* 71 Bus. Law. 1113, 1143 (2016) (noting that ''bullet-dodging'' occurs when a board delays the grant of an option until adverse material nonpublic information known to the board is disclosed, which reduces the market price and the option exercise price that is set at the time of the grant).

[72] 2006 Executive Compensation Release, *supra* note 65, at 53163.

[73] Named executive officers include all individuals serving as the registrant's Principal Executive Officer (''PEO'') or Principal Financial

Continued

within a certain time proximity of the release of material nonpublic information such as an earnings announcement.

Under the proposal, to identify if any such timed options are granted, a new paragraph (x) would be added to Item 402 of Regulation S–K [74] that would require tabular disclosure of each option award (including the number of securities underlying the award, the date of grant, the grant date fair value, and the option's exercise price) granted within 14 calendar days before or after the filing of a periodic report, an issuer share repurchase, or the filing or furnishing of a current report on Form 8–K that contains material nonpublic information; the market price of the underlying securities the trading day before disclosure of the material nonpublic information; and the market price of the underlying securities the trading day after disclosure of the material nonpublic information.[75]

Many companies required to file Exchange Act periodic reports also voluntarily communicate material nonpublic information regarding their results of operations or financial condition for a completed fiscal quarter or annual period through an earnings release.[76] After completion of a fiscal quarter, a company's board of directors will usually meet a week or two before announcing the earnings release.[77] During this period, the board would likely be aware of material nonpublic information that could affect the stock price of the company. The proposed fourteen day window is designed to cover the period that a company would be aware of material nonpublic information at the time that its board of directors' grants an option award. In addition, new Item 402(x) would require narrative disclosure about an issuer's option grant policies and practices regarding the timing of option grants and the release of material nonpublic information, including how the board determines when to grant options and whether, and if so, how, the board or compensation committee takes material nonpublic information into account when determining the timing and terms of an award. For companies that are subject to CD&A, the proposed narrative disclosure could be included in CD&A.

The proposed amendments are intended to provide shareholders a full and complete picture of any spring-loaded or bullet-dodging option grants during the fiscal year. It is important for shareholders to understand company practices with respect to these types of options grants as they consider their say-on-pay votes, and when approving executive compensation and electing directors. Accordingly, we are proposing to require this disclosure in annual reports on Form 10–K,[78] as well as in proxy statements and information statements related to the election of directors, shareholder approval of new compensation plans, and solicitations of advisory votes to approve executive compensation.[79]

We are also proposing to require registrants to tag the information required by Item 402(x) in Inline XBRL in accordance with Rule 405 of Regulation S–T (17 CFR 232.405) and the EDGAR Filer Manual.[80] We expect that the disclosure of this data in a structured data language would improve the usability of the data for investors, other market participants and the Commission, and facilitate the analysis of this information.

We do not propose to exempt smaller reporting companies [81] or emerging growth companies (''EGCs'') [82] from the proposed Item 402(x) disclosures. Information about grants of options awards while a board of directors is aware of material nonpublic information is material to all investors, and no less relevant to shareholders of a smaller reporting company or an EGC. Accordingly, smaller reporting companies and EGCs would be subject to the new disclosure requirement. However, consistent with the scaled approach to their executive compensation disclosure,[83] smaller reporting companies and EGCs would be permitted to limit their disclosures about specific option awards to the PEO, the two most highly compensated executive officers other than the PEO at fiscal year-end, and up to two additional individuals who would have been the most highly compensated but for not serving as executive officers at fiscal year-end.[84]

Request for Comment

37. To what extent does the board of directors or compensation committee currently consider the impact of granting option awards made close in time to disclosure of material nonpublic information? What type of effect would the proposed disclosures have on the timing and granting of option awards if this requirement for Item 402(x) were adopted?

38. Would the proposed table in Item 402(x) provide meaningful information

Officer (''PFO'') during the last completed fiscal year, the registrant's three most highly compensated officers other than the PEO and PFO who were serving as executive officers at the end of the last completed fiscal year, and up to two additional individuals for whom disclosure would have been provided but for the fact that the individual was not serving as an executive officer at fiscal year-end. *See* Item 402(a)(3) of Regulation S–K.

[74] In Release No. 33–9861, the Commission proposed to add paragraph (w) to Item 402. The proposed Item 402(x) designation is consistent with the new designations proposed in that release, but could change depending on Commission action to adopt those proposals. *See Listing Standards for Recovery of Erroneously Awarded Compensation,* Release No. 33–9861 (July 1, 2015) [80 FR 41144 (July 14, 2015)]. *See also Reopening of Comment Period for Listing Standards for Recovery of Erroneously Awarded Compensation,* Release No. 33–10998 (Oct. 14, 2021) [86 FR 58232 (October 21, 2021)].

[75] Under the proposed rule, disclosure would also be required of the grant date fair value of each equity award computed in accordance with Financial Accounting Standards Board (FASB) Accounting Standards Codification (ASC) Topic 718.

[76] Commission staff estimates that approximately 63% of the Form 10-Qs filed with the Commission in calendar year 2017 were accompanied by a prior or concurrent earnings release by the issuer.

[77] While some companies provide earnings releases in advance of the corresponding Form 10–Q filings, many companies also issue earnings releases concurrently with their Form 10–Q filings.

[78] The executive compensation disclosure requirements in Part III of Form 10–K may be incorporated by reference from a proxy or information statement involving the election of directors, if filed within 120 days of the end of the fiscal year. *See* Note 3 to General Instruction G(3) to Form 10–K.

[79] 17 CFR 240.14a-21 [Exchange Act Rule 14a-21] requires, among other things, companies soliciting proxies for an annual or other meeting of shareholders at which directors will be elected to include a separate resolution subject to a shareholder advisory vote to approve the compensation of named executive officers.

[80] This tagging requirement would be implemented by including a cross-references to Rule 405 of Regulation S–T in proposed Item 402(x), and by revising Rule 405(b) of Regulation S–T [17 CFR 232.405(b)] to include the Item 402(x) disclosure. In conjunction with the EDGAR Filer Manual, Regulation S–T governs the electronic submission of documents filed with the Commission. Rule 405 of Regulation S–T specifically governs the scope and manner of disclosure tagging requirements for operating companies and investment companies, including the requirement in Rule 405(a)(3) to use Inline XBRL as the specific structured data language to use for tagging the disclosures.

[81] ''Smaller reporting company'' is defined in Securities Act Rule 405 and 17 CFR 240.12b–2 [Exchange Act Rule 12b–2] as an issuer that is not an investment company, an asset-backed issuer (as defined in 17 CFR 229.1101), or a majority-owned subsidiary of a parent that is not a smaller reporting company and that: (1) Had a public float of less than $250 million; or (2) had annual revenues of less than $100 million and either: (a) No public float; or (b) a public float of less than $700 million.

[82] An EGC is defined as a company that has total annual gross revenues of less than $1.07 billion during its most recently completed fiscal year and, as of December 8, 2011, had not sold common equity securities under a registration statement. A company continues to be an EGC for the first five fiscal years after it completes an IPO, unless one of the following occurs: Its total annual gross revenues are $1.07 billion or more; it has issued more than $1 billion in non-convertible debt in the past three years; or it becomes a ''large accelerated filer,'' as defined in Exchange Act Rule 12b–2. *See* Securities Act Rule 405 and Exchange Act Rule 12b–2.

[83] *See* Item 402(l) of Regulation S–K.

[84] *See* Item 402(m)(2) of Regulation S–K.

to shareholders regarding option awards made close in time to the disclosure of material nonpublic information? What, if any, other information should be required? Should the proposed table include a column to specify the date on which the material nonpublic information was released? Should any of the proposed disclosure elements be eliminated?

39. The proposed disclosure requirements under new Item 402(x) would apply to option awards made within a 14-day period before or after the filing of a Form 10–Q or the filing (or furnishing) of a Form 8–K containing material nonpublic information with the Commission. Is the proposed 14-day time period appropriate? Should the period be longer or shorter than 14 days, and if so, what time period would be appropriate? What percent of option grants would be included in this disclosure based on these reporting windows?

40. Is a one-day period after the disclosure of material nonpublic information a sufficient period for the material nonpublic information to be reflected in the market price of the issuer's securities? Is a one-day period prior to the disclosure too late to reflect the change in the share price to the extent that the material nonpublic information may have been previously disclosed to the market (*e.g.,* leaked)? Should the window for measuring the change in market price based on the release of material nonpublic information be longer or shorter?

41. Should smaller reporting companies and emerging growth companies be required to provide all of the proposed disclosure?

42. Are there material tax implications that could result from the timing of stock option grants with the release of material nonpublic information that should be disclosed?

D. Reporting of Gifts on Form 4

Currently, Section 16 reporting persons are required to report any ''bona fide'' [85] gift of equity securities registered under Exchange Act Section 12 on Form 5. Exchange Act Rule 16a-3(f) provides that every person who at any time during an issuer's fiscal year was subject to Section 16 of the Exchange Act must file a Form 5 within 45 days after the issuer's fiscal year end to disclose certain beneficial ownership transactions and holdings not reported previously on Forms 3, 4, or 5.[86] As transactions that are exempted from Section 16(b) by 17 CFR 240.16b-5,[87] including both the acquisition and disposition of bona fide gifts are eligible for delayed reporting on Form 5 pursuant to Rule 16a-3(f)(1). This filing schedule, under the current rules, can permit insiders to report ''bona fide'' gifts more than one year after the date of the gift.[88]

We have become aware that the length of the filing period for Form 5 may allow insiders to engage in problematic practices involving gifts of securities, such as insiders making stock gifts while in possession of material nonpublic information,[89] or backdating a stock gift in order to maximize a donor's tax benefit.[90] To address these concerns, we are proposing to amend Exchange Act Rule 16a-3 to require the reporting of dispositions of bona fide gifts of equity securities on Form 4. Under the proposed amendment, an officer, director, or a beneficial owner of more than 10 percent of the issuer's registered equity securities making a gift of equity securities would be required to report the gift on Form 4 before the end of the second business day following the date of execution of the transaction. This would be significantly earlier than what is required under current reporting rules. This earlier reporting deadline would help investors, other market participants, and the Commission better evaluate the actions of these insiders and the context in which equity securities gifts are being made.

Request for Comment

43. Should we require dispositions by gifts of equity securities to be disclosed Form 4 instead of Form 5, as proposed?

44. Should we require disclosure of other information about gifts on Form 4 that are not already required by Form 4? If so, what information should we require?

[85] A bona fide gift is a gift that is not required or inspired by any legal duty or that is in any sense a payment to settle a debt or other obligation, and not made with the thought of reward for past services or hope for future consideration. *See Ownership Reports and Trading by Officers, Directors and Principal Stockholders,* Release No. 34–26333 (Dec. 2, 1988) [53 FR 49997 (Dec. 13, 1988)].

[86] 17 CFR 240.16a–3(f).

[87] Rule 16b–5.

[88] Reports on Form 5 are due within 45 days after the issuer's fiscal year end, which potentially allows a delay of up to 410 days between a reportable transaction and the filing of the Form 5.

[89] *See* Daisy Maxey, ''Improper 'Insider Charitable Giving' Is Widespread, Study Says'', WALL ST. J., July 5, 2021, at *https://www.wsj.com/articles/insider-charitable-giving-11625418315?mod=searchresults_pos1&page=1. See also supra* note 55 above.

[90] *See* S. Burcu Avci et al., *Insider Giving, supra* note 21 above (finding that insiders' charitable gifts of securities are unusually well timed suggesting that such results are likely due to the possession of material nonpublic information and from the backdating of the stock gift).

III. General Request for Comment

We request and encourage any interested person to submit comments on any aspect of the proposed amendments, other matters that might have an impact on the proposed amendments, and any suggestions for additional changes. With respect to any comments, we note that they are of greatest assistance to our rulemaking initiative if accompanied by supporting data and analysis of the issues addressed in those comments and by alternatives to our proposals where appropriate.

IV. Economic Analysis

We are mindful of the costs imposed by, and the benefits obtained from, our rules. Section 2(b) of the Securities Act,[91] Section 3(f) of the Exchange Act,[92] and Section 2(c) of the Investment Company Act [93] require us, when engaging in rulemaking, to consider or determine whether an action is necessary or appropriate in (or, with respect to the Investment Company Act, consistent with) the public interest, and to consider, in addition to the protection of investors, whether the action will promote efficiency, competition, and capital formation. In addition, Section 23(a)(2) of the Exchange Act requires the Commission to consider the effects on competition of any rules the Commission adopts under the Exchange Act and prohibits the Commission from adopting any rule that would impose a burden on competition not necessary or appropriate in furtherance of the purposes of the Exchange Act.[94]

We have considered the economic effects of the proposed amendments, including their effects on competition, efficiency, and capital formation. Many of the effects discussed below cannot be quantified. Consequently, while we have, wherever possible, attempted to quantify the economic effects expected from this proposal, much of the discussion remains qualitative in nature. Where we are unable to quantify the economic effects of the proposed amendments, we provide a qualitative assessment of the potential effects and encourage commenters to provide data and information that would help quantify the benefits, costs, and the potential impacts of the proposed amendments on efficiency, competition, and capital formation.

We request comment from all interested parties. With regard to any comments, we note that such comments

[91] 15 U.S.C. 77b(b).

[92] 15 U.S.C. 78c(f).

[93] 15 U.S.C. 80a–2(c).

[94] 15 U.S.C. 78w(a)(2).

are of greatest assistance to our rulemaking initiative if accompanied by supporting data and analysis of the issues addressed in those comments.

A. Broad Economic Considerations

The proposed amendments are expected to provide greater transparency to investors (*i.e.,* decrease information asymmetries between insiders and outside investors) about issuer and insider trading arrangements and restrictions, as well as insider compensation and incentives, enabling more informed decisions about investment in the company. The proposed amendments are also expected to limit the opportunity for insider trading based on material nonpublic information (''MNPI'') (referred to as ''insider trading'' throughout Section IV for brevity) under Rule 10b5–1 by amending the substantive conditions of the affirmative defense, resulting in benefits to investors and improvement in insiders' incentives.

Insider trading enables certain investors who have access to inside information or who control the timing or substance of corporate disclosures to profit at the expense of other investors. Due to their access to material nonpublic information, insiders can obtain profits through the strategic timing of trades in the issuer's securities. These profits are gained at the expense of ordinary investors, and essentially transfer wealth from other investors to the insider. In addition, insider trading can distort the incentives of corporate insiders, which results in a loss of shareholder value, and erode investor confidence in the markets. To the extent insider trading by a company's insiders imposes reputational costs for companies, by reducing insider trading, the proposed amendments also could offer reputational benefits to companies.

1. Insider trading harms investors, distorts insiders' incentives, and imposes economic costs on investors and capital markets.

The proposed amendments are expected to decrease the incidence of unlawful insider trading based on MNPI.[95] Insider trading represents a breach of fiduciary or other similar relation of trust and confidence.[96] Congress, the Courts, and the Commission have concluded that such insider trading is illegal.[97] Before analyzing each aspect of the proposed rule, in the interest of completeness, the Commission first reviews the economic literature on the insider trading prohibition.[98]

Insiders have information advantages that place them in a unique position to obtain profits for themselves through strategic timing of trades. When an insider profits by trading on MNPI, those profits are obtained at other investors' expense.[99] Thus, reducing the incidence of insider trading would benefit investors.[100]

Insider trading also imposes a cost on the investors in the company by distorting managerial incentives, which results in a loss of shareholder value. Thus, whether insiders are strategically timing stock sales and purchases based on MNPI is informative about insider incentives and the value of the company. The ability of officers and directors (who are either involved in making corporate decisions or play a crucial role in the oversight of such decisions) to profit from MNPI exacerbates conflicts of interest between officers/directors and other shareholders, resulting in inefficient, value-decreasing corporate decisions. By protecting the insider from the full effects of poor corporate performance on the value of the insider's equity position, through the ability to sell ahead of negative news, insider trading weakens incentive alignment and exacerbates agency conflicts (and in turn increases the cost of monitoring insiders). The incentive distortions are discussed in greater detail below.

One incentive distortion is that an insider may prefer projects that require less effort or that yield higher private benefits, even if such projects have a negative net present value (NPV) and thus decrease shareholder value.[101] To mitigate agency conflicts and better align insider incentives with those of shareholders, insiders are often compensated with equity. The ability to sell shares in advance of negative news (to the extent the compensation has vested) protects the insider's equity position from the full effect of share price declines. This weakens incentive alignment and exacerbates the agency conflicts described above, increasing the likelihood that the insider would pursue negative-NPV projects. Downside protection also incentivizes the insider to choose riskier negative-NPV projects, due to the possibility of profiting on the upside.[102] Relatedly, if short-term investment projects yield more profitable MNPI (while MNPI about long-term projects arrives less frequently or is less definitive), an

[95] The discussion of broad economic considerations generally focuses on insider trading in stock, except where specified otherwise. To the extent that insiders benefit from the timing of option awards and gifts of stock around MNPI, some of the economic effects associated with insider trading also may be manifested in those contexts. For a detailed discussion of the economic considerations applicable to option award timing and insider gift timing, *see infra* Sections IV.D and IV.E.

[96] *See infra* note 187.

[97] *See supra* Section I.

[98] *See generally* Alexandre Padilla and Brian Gardiner, Insider Trading: Is There an Economist in the Room? 24 *J. Private Enterprise* 113, 123 (2009) (noting ''economists have progressively reached the same conclusion: that insider trading is harmful to investors, corporations, and stock exchanges, and, therefore, ought to be prohibited'').

[99] *See also* Michael Manove, The Harm from Insider Trading and Informed Speculation, 104(4) *Quarterly Journal of Economics,* 823–845 (1989); William K.S. Wang, Trading on Material Non-Public Information on Impersonal Stock Markets: Who is Harmed and Who Can Sue Whom Under SEC Rule 10b–5?, *Southern California Law Review* (1981).

[100] These arguments and those below apply to Rule 10b5–1 plans pertaining to trading in equity of other issuers as well as own company stock. Misappropriation of information may have many economic effects, including but not limited to, revealing information to the market in a manner suboptimal to the issuer, (and thus discouraging investment in information and increasing costs of keeping information private). Further, as with trading in own company stock, increased trading by insiders reduces incentives for liquidity provision through adverse selection, imposing economic costs on investors broadly. Finally, misappropriation has associated agency costs as it represents an undisclosed form of compensation, and may lead further divergence of interests between the manager and the shareholders. *See* Frank H. Easterbrook, Insider Trading, Secret Agents, Evidentiary Privileges, and the Production of Information, *The Supreme Court Review,* 315–16, 323, 331–34; *In re Melvin,* SEC Release No. 3682, 2015 WL 5172974, at *4 & n.31 (Sept. 4, 2015).

[101] *See, e.g.,* Antonio E. Bernardo, Contractual Restrictions on Insider Trading: A Welfare Analysis, 18(1) *Economic Theory* 7–35 (2001) (showing in a model that ''[f]or many reasonable parameter values, however . . . that managers may be too willing to take risky projects. In fact, managers will often choose the risky investment project when it has a lower expected return than the riskless investment project.''). In some circumstances, insider trading may remedy a manager's excess conservatism due to under diversification. *See also* Lucian A. Bebchuk and Chaim Fershtman, Insider Trading and the Managerial Choice among Risky Projects, 29(1) *Journal of Financial and Quantitative Analysis,* 1–14 (1994). However, Bebchuk and Fershtman (1994) similarly acknowledge that ''[t]he desire to increase trading profits might lead the managers to prefer a very risky project even if it offers a lower expected return than a safer alternative.''

[102] *See, e.g.,* Frank H. Easterbrook, Insider Trading, Secret Agents, Evidentiary Privileges, and the Production of Information, *The Supreme Court Review,* 309–366, 332 (1981) (stating that ''[t]he opportunity to gain from insider trading also may induce managers to increase the volatility of the firm's stock prices. . . They may select riskier projects than the shareholders would prefer, because if the risk pays off they can capture a portion of the gains in insider trading and, if the project flops, the shareholders bear the loss.''). *But see* Alexander P. Robbins, *The Rule 10b5–1 Loophole: An Empirical Study,* 34 Review of Quantitative, Finance and Accounting, 199–224 (2010) (finding, in a sample of 10b5–1 plans of 81 NASDAQ-listed companies from 2004 to 2006 that ''insiders do not appear to increase the volatility of their own firms' shares in order to profit by trading on the basis of material nonpublic information under the protection of the 10b5–1 affirmative defense'').

insider may exhibit short-termism in investment decisions, at the expense of shareholder value.[103]

Being able to profit from MNPI also can distort insider incentives with respect to other corporate decisions that can affect the share price (for example, repurchases in cases where such a payout is not efficient, motivated by the attempt to boost the share price in advance of an insider's sale of shares).[104] As another example, officers and directors engaged in insider trading may be disincentivized from sharing information efficiently within the firm if they can profit from withholding it and personally trading on it, which leads to inefficient corporate decisions and thus decreased shareholder value.[105]

Another economic cost of insider trading is that it may incentivize insiders to adjust the timing or content of corporate disclosure (*e.g.,* delay the release of MNPI).[106] Manipulation of corporate disclosure causes price distortions and impairs the ability of investors to make informed investment decisions. Less informed investment decisions result in less efficient allocation of capital in investor portfolios, compared to a setting with no disclosure distortions. To the extent that investors anticipate such disclosure gaming, they may commensurately increase their information gathering effort, resulting in higher information gathering costs for investors. Investors, however, have a limited ability to identify specific corporate disclosures being manipulated or to obtain timely and accurate information elsewhere.

Investor recognition of the potential incentive distortions and the risk of lower-quality corporate disclosures resulting from insider trading, as well as the risk of buying shares from a better informed inside seller, is likely to decrease investor confidence in the issuer and make investors less willing to buy or hold the issuer's shares (trading against informed insiders generates what is known as ''adverse selection'').[107] This in turn could have negative effects on capital formation and the ability to fund investments, due to challenges in raising the required amount of capital.

Turning to the effects on the market as a whole, the risk of trading against informed insiders trading on MNPI negatively affects market integrity and erodes investor confidence in the

[103] *See* M. Todd Henderson, *Insider Trading and Executive Compensation: What We Can Learn from the Experience with Rule 10b5–1,* Research Handbook on Executive Pay, 299 (2012) (stating that short-termism is a cost of insider trading and that ''[e]xecutives looking to maximize the value of their shares may engage in conduct that increases the stock price in the short run at the expense of the long term so that they can profit from trading in firm stock''). Such managerial short-termism/myopia reduces shareholder value. *See generally,* John R. Graham, Campbell R. Harvey, and Shiva Rajgopal, *The Economic Implications of Corporate Financial Reporting,* 40(1–3) Journal of Accounting and Economics, 3–73 (2005); Alex Edmans, Blockholder Trading, *Market Efficiency, and Managerial Myopia,* 64(6) Journal of Finance, 2481–2513 (2009).

[104] *See, e.g.,* Konan Chan, David L. Ikenberry, Inmoo Lee, and Yanzhi Wang, *Share Repurchases as a Potential Tool to Mislead Investors,* 16 Journal of Corporate Finance 137 (2010) (finding in 1980–2000 data that a limited number of managers may have used repurchases in a misleading way as ''cheap talk''); Alice A. Bonaimé and Michael D. Ryngaert, *Insider Trading and Share Repurchases: Do Insiders and Firms Trade in the Same Direction?,* 22 Journal of Corporate Finance, 35–53 (2013) (finding that repurchases that coincide with net insider selling may be related to price support and/or reasons related to option exercises); Peter Cziraki, Evgeny Lyandres, and Roni Michaely, *What do Insiders Know? Evidence from Insider Trading Around Share Repurchases and SEOs,* 66 Journal of Corporate Finance 101544 (2021) (finding that, ''[h]igher insider net buying is associated with better post-event operating performance, a reduction in undervaluation, and, for repurchases, lower post-event cost of capital. Insider trading also predicts announcement returns and long-term abnormal returns following events.'' Their results suggests that ''insider trades before corporate events [repurchases and SEOs] contain information about changes both in fundamentals and in investor sentiment''); Lenore Palladino, Do Corporate Insiders Use Stock Buybacks for Personal Gain?, 34(2) *International Review of Applied Economics,* 152–174 (2020) (finding increased insider selling in quarters where buybacks are occurring); Waqar Ahmed, *Insider Trading Around Open Market Share Repurchase Announcements,* University of Warwick Working Paper (2017) (finding that ''insiders take advantage of higher post-[repurchase] announcement price and sell more heavily'', and that such selling is predictive of lower long-term returns). *See also* Rulemaking Petition 4–746, Jun. 25, 2019, *available at https://www.sec.gov/rules/petitions/2019/petn4-746.pdf,* at 5 and note 17 (expressing concern and citing evidence of repurchases used to increase share prices at the time when insiders sell shares); Alex Edmans, Vivian Fang, and Allen Huang, The Long-Term Consequences of Short-Term Incentives, *Journal of Accounting Research,* forthcoming (2021) (finding that ''[v]esting equity is positively associated with the probability of a firm repurchasing shares'' but that ''it is also associated with more negative long-term returns over the 2–3 years following repurchases'' and that ''CEOs sell their own stock shortly after using company money to buy the firm's stock, also inconsistent with repurchases being motivated by undervaluation''). *But see, e.g.,* Harrison Liu and Edward Swanson, Is Price Support a Motive for Increasing Share Repurchases?, 38 *Journal of Corporate Finance,* 77 (2016) (finding that ''[c]orporate insiders do not sell from personal stock holdings during the price support quarter.''); Pascal Busch and Stefan Obernberger, Actual Share Repurchases, Price Efficiency, and The Information Content Of Stock Prices, 30 *Review of Financial Studies,* 324 (2017) (concluding, with respect to actual share repurchases, that price support provided by repurchases improves price efficiency, even when manipulation concerns might be highest, such as those that occur prior to insider sales).

[105] *See, e.g.,* Robert J. Haft, The Effect of Insider Trading Rules on the Internal Efficiency of the Large Corporation, 80(5) *Michigan Law Review,* 1051–1071, 1055 (1982).

[106] *See, e.g.,* Ranga Narayanan, Insider Trading and the Voluntary Disclosure of Information by Firms, 24(3) *Journal of Banking and Finance,* 395–425 (2000) (stating that ''[s]tringent enforcement of insider trading regulations induces more disclosure by firms''); Qiang Cheng and Kin Lo, Insider Trading and Voluntary Disclosures, 44(5) *Journal of Accounting Research,* 815–848 (2006) (finding that when ''managers plan to purchase shares, they increase the number of bad news forecasts to reduce the purchase price . . . insiders do exploit voluntary disclosure opportunities for personal gain, but only selectively, when litigation risk is sufficiently low''); Frank H. Easterbrook, Insider Trading, Secret Agents, Evidentiary Privileges, and the Production of Information, *Supreme Court Review 1981,* 309–366, 333 (1981) (stating that ''[t]he prospect of insiders' gains may lead the firm to delay the release of information''). Some studies also note that an opposite effect is possible—managers concerned about litigation may provide higher-quality disclosure before selling shares. *See* Jonathan L. Rogers, Disclosure Quality and Management Trading Incentives, 46(5) *Journal of Accounting Research,* 1265–1296 (2008) (Finding that ''[c]onsistent with a desire to reduce the probability of litigation . . . managers provide *higher quality* disclosures before selling shares than they provide in the absence of trading'' but also finding that ''[c]onsistent with a desire to maintain their information advantage, . . . some, albeit weaker, evidence that managers provide *lower quality* disclosures prior to purchasing shares than they provide in the absence of trading.''). In the context of Rule 10b5–1 plans, *see, e.g.,* Stanley Veliotis, Rule 10b5–1 Trading Plans and Insiders' Incentive to Misrepresent, 47(2) *American Business Law Journal,* 313–360, at 330 & nn. 77–78 (2010) (stating that ''Rule 10b5–1 plans give insiders an incentive to accelerate the release of good news ahead of planned stock sales and to delay the release of bad news until after the sales are completed . . . As a practical matter, manipulation of the announcement's timing would be extremely difficult to prove because insiders are not required to disclose their 10b5–1 plans and firms seldom disclose a schedule for corporate announcements in advance . . .''); Karl T. Muth, With Avarice Aforethought: Insider Trading and 10b5–1 Plans, 10(1) *U.C. Davis Business Law Journal,* 65–82, at 71 & nn. 32–33 (2009) (stating that ''executives can participate in the timing of news . . . about the company. Withholding or 'timing' news allows the executive to (imperfectly) time market response to news . . .''); John Shon and Stanley Veliotis, Meeting or Beating Earnings Expectations, 59(9) *Management Science,* 1988–2002 (2013) (finding that ''firms with insider sales executed under Rule 10b5–1 plans exhibit a higher likelihood of meeting or beating analysts' earnings expectations (MBE) . . . [that] this relation between MBE and plan sales is more pronounced for the plan sales of chief executive officers (CEOs) and chief financial officers (CFOs) and is nonexistent for other key insiders,'' and concluding that ''[o]ne interpretation of [their] results is that CEOs and CFOs who sell under these plans may be more likely to engage in strategic behavior to meet or beat expectations in an effort to maximize their proceeds from plan sales'').

[107] *See, e.g.,* Lawrence M. Ausubel, Insider Trading in a Rational Expectations Economy, 80(5) *American Economic Review* 1022–1041 (1990) (showing in a rational expectations model that ''[i]f 'outsiders' expect 'insiders' to take advantage of them in trading, outsiders will reduce their investment. The insiders' loss from this diminished investor confidence may more than offset their trading gains. Consequently, a prohibition on insider trading may effect a Pareto improvement.''). Further, informed trading by insiders can reduce the incentive for outside investors to acquire information. *See* Michael J. Fishman and Kathleen M. Hagerty, Insider Trading and the Efficiency of Stock Prices, 23(1) *RAND Journal of Economics,* 106–122 (1992).

secondary trading market, deterring traders that do not have the advantage of MNPI. Insider trading is also likely to adversely affect price efficiency [108] and liquidity.[109]

2. Certain Rule 10b5–1 plan [110] *trading practices may raise concerns about potential insider trading.*

Over the years concerns have been raised that persons have engaged in securities trading based on MNPI while availing themselves of the Rule 10b5–1(c)(1) affirmative defense.[111] Examples of practices that have raised concerns include the strategic cancellation of previously adopted plans or individual trades on the basis of MNPI,[112] as well as initiation or resumption of trading close in time to plan adoption or modification.[113]

As discussed in detail in Section II above, the Commission is proposing several amendments to address these practices, including additional disclosure requirements for insider and issuer trading plans under Item 408 of Regulation S–K; additional disclosure of Rule 10b5–1 plan use in beneficial ownership forms; and modifications to the conditions of the affirmative defense under Rule 10b5–1(c)(1) (introducing cooling-off periods following the adoption of a new or modified plan; certification requirements; and restrictions on single-trade plans and multiple overlapping plans for open market trades in the same class of securities and single-trade plans). Disclosure requirements significantly affect the underlying behavior of insiders and issuers by drawing scrutiny of investors and other market participants to insider trading practices.[114]

Combined, the proposed amendments are expected to reduce the potential for insider trading through Rule 10b5–1

[108] A number of studies demonstrate adverse effects of insider trading on market efficiency. *See, e.g.,* Michael J. Fishman and Kathleen M. Hagerty, Insider Trading and the Efficiency of Stock Prices, 23(1) *RAND Journal of Economics,* 106–122 (1992) (showing that ''under certain circumstances, insider trading leads to less efficient stock prices. This is because insider trading has two adverse effects on the competitiveness of the market: It deters other traders from acquiring information and trading, and it skews the distribution of information held by traders toward one trader.''); Zhihong Chen and Yuan Huang, Yuanto Kusnadi, and K.C. John Wei, The Real Effect of the Initial Enforcement of Insider Trading Laws, 45 *Journal of Corporate Finance,* 687–709 (2017) (finding evidence that the initial enforcement of insider trading laws ''improves capital allocation efficiency by increasing price informativeness and reducing market frictions''); Robert M. Bushman, Joseph D. Piotroski, and Abbie J. Smith, Insider Trading Restrictions and Analysts' Incentives to Follow Firms, 60(1) *Journal of Finance,* 35–66 (2005) (arguing that ''insider trading crowds out private information acquisition by outsiders'' and showing that ''analyst following increases after initial enforcement of insider trading laws'' in a cross-country sample); Nuno Fernandes and Miguel A. Ferreira, Insider Trading Laws and Stock Price Informativeness, 22(5) *Review of Financial Studies* 1845–1887 (2009) (finding that price informativeness increases with the enforcement of insider trading laws, but only in countries with a strong ''efficiency of the judicial system, investor protection, and financial reporting''). *See also* Alexander P. Robbins, The Rule 10b5–1 Loophole: An Empirical Study, 34 *Review of Quantitative Finance and Accounting,* 199–224 (2010) (finding, in a sample of 10b5–1 plans of 81 NASDAQ-listed companies from 2004 to 2006 that ''10b5–1 plans have a significant negative effect on the liquidity of a firm's shares, and therefore the firm's cost of capital''). Some studies argue that insider trading improves price efficiency. *See, e.g.,* Hayne E. Leland, Insider Trading: Should It Be Prohibited?, 100(4) *Journal of Political Economy,* 859–887 (1992) (showing in a model that ''stock prices better reflect information'' when insider trading is permitted.); Utpal Bhattacharya, Hazem Daouk, Brian Jorgenson, and Carl-Heinrich Kehr, When an Event is Not an Event: The Curious Case of An Emerging Market, 55(1) *Journal of Financial Economics,* 69–101 (2000) (suggesting ''that unrestricted insider trading causes prices to fully incorporate the information before its public release''); *see generally* Henry G. Manne, Insider Trading and the Stock Market (1966). A reduction in insider trading can have nuanced effects on market efficiency. For example, the conclusions about the effect on insider trading on market efficiency may depend on whether the framework is static or dynamic. *See* David Easley, Soeren Hvidkjaer, and Maureen O'Hara, Is Information Risk a Determinant of Asset Returns? 57(5) *Journal of Finance,* 2185–2221 (2002).

[109] Various studies show that insider trading negatively impacts liquidity. For example, *see* Raymond P.H. Fishe and Michel A. Robe, The Impact of Illegal Insider Trading in Dealer and Specialist Markets: Evidence From a Natural Experiment, 71(3) *Journal of Financial Economics,* 461–488 (2004); Louis Cheng, Michael Firth, T.Y. Leung, and Oliver Rui, The Effects of Insider Trading on Liquidity, 14(5) *Pacific-Basin Finance Journal* 467–483 (2006); Hayne E. Leland, Insider Trading: Should It Be Prohibited? 100(4) *Journal of Political Economy,* 859–887 (1992) (showing in a model that ''markets are less liquid'' and ''outside investors and liquidity traders will be hurt'' when insider trading is permitted); Laura N. Beny, Do Insider Trading Laws Matter? Some Preliminary Comparative Evidence, 7(1) *American Law and Economics Review,* 144–183 (2005) (finding that ''countries with more prohibitive insider trading laws have more diffuse equity ownership, more accurate stock prices, and more liquid stock markets''); Lawrence R. Glosten, Insider Trading, Liquidity, and the Role of the Monopolist Specialist, 62(2), *Journal of Business* 211–235 (1989) (showing in a model that insider trading reduces liquidity). However, another study does not find a negative effect of insider trading on liquidity. *See e.g.,* Charles Cao, Laura C. Field, and Gordon Hanka, Does Insider Trading Impair Market Liquidity? Evidence from IPO Lockup Expirations, 39(1) *Journal of Financial and Quantitative Analysis,* 25–46 (2004).

[110] For purposes of this economic analysis, the terms ''Rule 10b5–1 trading arrangements'' and ''Rule 10b5–1 plans'' are used to refer to the trading arrangements reliant upon the affirmative defense of Rule 10b5–1(c)(1), in line with the use of these terms in the academic research on this topic.

[111] *See, e.g., See* Recommendations of the Investor Advisory Committee Regarding Rule 10b5–1 Plans (Sept. 9, 2021), at *https://www.sec.gov/spotlight/investor-advisory-committee-2012/20210916-10b5-1-recommendation.pdf;* Letter from David Larcker, March 10, 2021, *available at https://www.sec.gov/comments/s7-24-20/s72420-8488827-229970.pdf;* Letter from Council of Institutional Investors (CII), April 22, 2021, *available at https://www.sec.gov/comments/s7-14-20/s71420-8709408-236962.pdf;* Letter from CII, March 18, 2021, *available at https://www.sec.gov/comments/s7-24-20/s72420-8519687-230183.pdf;* Letter from CII, September 25, 2020, *available at https://www.sec.gov/comments/s7-06-20/s70620-7843308-223819.pdf;* Letter from CII, December 13, 2018, *available at https://www.sec.gov/comments/s7-20-18/s72018-4766666-176839.pdf;* Letter from CII, July 11, 2018, *available at https://www.cii.org/files/July%2011%202018%20SEC%20Reg%20Flex%20Letter%20Final.pdf;* Letter from CII, February 12, 2018, available at *https://www.sec.gov/comments/s7-07-17/s70717-3025708-161898.pdf;* Letter from CII to The Honorable Jay Clayton, January 18, 2018, *available at http://www.cii.org/files/issues_and_advocacy/correspondence/2018/January%2018%202018%20Rule%2010b5-1%20(finalI).pdf;* Letter from CII, July 8, 2016, *available at https://www.sec.gov/comments/s7-06-16/s70616-49.pdf;* Letter from CII to The Honorable Mary Jo White, May 9, 2013, *available at http://www.cii.org/files/issues_and_advocacy/correspondence/2013/05_09_13_cii_letter_to_sec_rule_10b5-1_trading_plans.pdf;* CII Rulemaking Petition.

[112] *See, e.g.,* Jill E. Fisch, Testimony before the Investor Protection, Entrepreneurship, and Capital Markets Subcommittee, U.S. House Committee on Financial Services, Insider Trading and Stock Option Grants: An Examination of Corporate Integrity in the Covid–19 Pandemic, September 17, 2020, *available at https://docs.house.gov/meetings/BA/BA16/20200917/111013/HHRG-116-BA16-Wstate-FischJ-20200917.pdf,* at p. 5; Alan D. Jagolinzer, SEC rule 10b5–1 and Insiders' Strategic Trade, 55(2) *Management Science,* 224–239 (2009) (finding ''for a sample of 54 firms for which there is public disclosure of early sales plan terminations'' that ''early sales plan terminations are associated with pending positive performance shifts, reducing the likelihood that insiders' sales execute at low prices''); Stanley Veliotis, Rule 10b5–1 Trading Plans and Insiders' Incentive to Misrepresent, 47(2) *American Business Law Journal,* 313–360, at 328–30 (2010) (discussing concerns related to selective cancellations); Taylan Mavruk and Nejat H. Seyhun, Do SEC's 10B5–1 Safe Harbor Rules Need to Be Rewritten, *Columbia Business Law Review,* 133–183, at 165, 168–71 (2016) (discussing selective cancellation concerns, providing indirect evidence, and concluding that its findings are ''consistent with the hypothesis that insiders intervene in their planned transactions to increase profitability''). *See also* Stephen L. Lenkey, Cancellable Insider Trading Plans: An Analysis of SEC Rule 10b5–1, 32(12) *Review of Financial Studies,* 4947–4996 (2019) (concluding, in a theoretical framework, that ''[b]ecause the conditions under which the insider elects to adopt a plan often coincide with the conditions under which the termination option reduces welfare, an alternative regulatory framework wherein the insider could adopt a non-cancellable plan (and, thereby, credibly commit to execute his planned trade) would improve the investors' welfare under a wide set of circumstances.'')

[113] For a discussion of the evidence of returns following insider trades occurring close to plan adoption, *see infra* notes 123–131 and accompanying and preceding text. *But see infra* notes 132–138 and accompanying and following text. Existing disclosure does not provide data on plan cancellations or plan modifications (including cancellations of planned trades).

[114] Studies have found evidence that changes in mandatory disclosure affect behavior. *See, e.g.,* Elizabeth C. Chuk, Economic Consequences of Mandated Accounting Disclosures: Evidence from Pension Accounting Standards, 88(2) *Accounting Review,* 395–427 (2013); Alice Adams Bonaimé, Mandatory Disclosure and Firm Behavior: Evidence from Share Repurchases, 90(4) *Accounting Review,* 1333–1362 (2015).

plans and other trading arrangements by insiders and companies. As discussed above, deterring insider trading would result in benefits for investor protection, capital formation, and orderly and efficient markets. By deterring insider trading, the amendments would disincentivize insider behavior that is likely to harm the securities markets and undermine investor confidence.

3. Current levels of disclosure about insider and issuer trading plans limit the ability of investors to identify the risk of insider trading and consider the associated incentive conflicts and information asymmetries in their investment decisions.

Existing gaps in the disclosure framework limit the information currently available to investors and other market participants regarding the use of insider and issuer trading plans, and the extent to which trading based on MNPI potentially distorts insider incentives with respect to corporate decisions (and thus shareholder value). Besides limiting the ability of investors to correctly value the company's shares, and thus make informed investment decisions, such disclosure gaps limit the ability of the Commission staff to perform market surveillance with regard to Exchange Act Section 10(b) and Rule 10b-5, with the associated adverse consequences for investor protection.

The proposed disclosure amendments would provide greater transparency to investors and decrease information asymmetries between insiders and outside investors about insiders' and companies' trading arrangements and associated policies and procedures, enabling more informed decisions about whether to invest in the company's shares and at what valuation. This might result in more efficient capital allocation and more informationally efficient pricing. The proposed additional disclosure requirements might also indirectly yield potential capital formation benefits if they increase investor confidence in the company's governance.

4. The economic effects of the proposed amendments are in some cases uncertain.

The discussed economic effects of the proposed amendments may be uncertain or difficult to generalize.

An important factor contributing to the uncertainty about the magnitude of the benefits of the proposed amendments to Rule 10b5–1 is the potential for substitution between Rule 10b5–1 plans and other trading arrangements. The use of the Rule 10b5–1(c)(1) affirmative defense is voluntary. Insiders and companies may elect to pursue other trading arrangements if they perceive the costs of relying on that affirmative defense are too high. For example, companies may instead rely on the Rule 10b5–1(c)(2) affirmative defense. The application of the proposed disclosure requirements of new Item 408 of Regulation S–K to all officer, director, and company trading plans (including plans not under Rule 10b5–1) is expected to partly mitigate this concern.

The considerations presented above are generally applicable to the proposed amendments as a whole. In the sections that follow we provide a more detailed discussion of economic effects of the particular proposed amendments, including the expected costs and benefits relative to the market baseline, as well as reasonable alternatives.

B. Amendments to Rule 10b5–1(c)(1)

The Commission is proposing additional conditions that must be satisfied for a trading arrangement to be eligible for the Rule 10b5–1(c)(1) affirmative defense. These amendments are intended to protect investors by decreasing opportunities for officers, directors, and companies to profit from MNPI through such trading arrangements.

The proposed amendments would narrow the conditions under which the Rule 10b5–1(c)(1) affirmative defense would be available. First, the proposed amendments would establish mandatory cooling-off periods before any trading could commence under a Rule 10b5–1 trading arrangement by an officer, director, or issuer after the adoption of a new or modified trading arrangement. Second, the proposed amendments would eliminate the availability of the affirmative defense for multiple overlapping trading arrangements for open market transactions in the same class of securities, as well as limit single-trade plans to a maximum of one in a 12-month period. Third, the proposed amendments would impose a certification requirement as a condition of the Rule 10b5–1(c)(1) affirmative defense for trading arrangements of officers and directors. In addition, the proposed amendments would broaden the good faith provision, which is a condition of the 10b5–1(c)(1) affirmative defense.

1. Baseline and Affected Parties

We consider the economic effects of the proposed amendments in the context of the regulatory and market baseline. A lack of comprehensive disclosure of Rule 10b5–1 trading arrangements makes it more difficult to provide complete data on existing Rule 10b5–1 practices and affected plan participants. Our estimates are limited by the voluntary nature of the Rule 10b5–1 disclosure in beneficial ownership filings, where insider trades are reported, as well as the limited scope of Rule 10b5–1 trades for which Form 144 reporting is required.[115] Based on beneficial ownership filings (Forms 3, 4, and 5) during the 2020 calendar year, approximately 4,900 natural persons at approximately 1,400 companies reported trades under Rule 10b5–1 trading arrangements. This figure includes approximately 4,800 officers and directors at 1,400 companies; narrowing it to officers yields an estimate of approximately 3,900 officers at 1,200 companies.[116] Due to the data limitations mentioned above, the actual number of affected parties is likely to be larger.

Below we discuss the available evidence on Rule 10b5–1 plans of officers, directors, and other natural persons. A recent academic study analyzed Form 144 data on insider trades under Rule 10b5–1 plans during January 2016–May 2020.[117] The study

[115] Form 144 must be filed with the Commission by an affiliate as a notice of the proposed sale of (restricted) securities when the amount to be sold under Rule 144 during any three-month period exceeds 5,000 shares or units or has an aggregate sales price in excess of $50,000. *See https://www.investor.gov/introduction-investing/investing-basics/glossary/form-144.* Thus, Rule 10b5–1 plan trades below that threshold are not required to be reported on Form 144 and thus may not be in our data. Further, because the vast majority of Form 144 filings are made in paper form during the considered period, we rely on information from such paper filings extracted and processed by the vendor for the Thomson Reuters/Refinitiv insiders dataset.

[116] The estimate is based on the data from filings on Forms 3, 4, and 5 for trades during calendar year 2020 that reported Rule 10b5–1 plan use (obtained from Thomson Reuters/Refinitiv insiders dataset). The estimate only captures natural persons with Rule 10b5–1 plans that have Section 16 reporting obligations, and thus likely represents a lower bound on the number of affected plan participants. Officers and directors are identified based on the role code (beneficial owners and affiliates are not included in the count). Combining data from Form 144 filings with planned sale dates in calendar year 2020 that reported Rule 10b5–1 plan use (also obtained from Thomson Reuters/Refinitiv insiders dataset) and the data from filings on Forms 3, 4, and 5 cited above, we estimate that approximately 5,800 natural persons at approximately 1,500 companies (which includes 5,000 officers and directors at 1,400 companies; or when limited to officers only, approximately 4,100 officers at 1,300 companies) reported trades under Rule 10b5–1. Due to gaps in the reporting regime, we cannot be certain whether the higher prevalence of plans reported for officers is due to their higher prevalence in general or due to greater disclosure of such plans.

[117] *See* David F. Larcker, Bradford Lynch, Philip Quinn, Brian Tayan, and Daniel J. Taylor, Gaming the System: Three Red Flags'' of Potential 10b5–1 Abuse, Stanford Closer Look Series, January 19, 2021 (''Larcker et al. (2021)'') (2021). The study presents novel data ''on all sales of restricted stock filed on Form 144 between January 2016 and May

Continued

documents ''[t]he mean (median) cooling-off period is 117.9 (76) days. Approximately 14 percent of plans commence trading within the first 30 days, and 39 percent within the first 60 days. These represent very short cooling-off periods. 82 percent of plans commence trading within 6 months.'' [118] As a caveat, the available data do not indicate whether the trading time frames are due to an issuer's policies (*i.e.,* whether there is a ''cooling-off period'' is not known—only the time between plan adoption and the first trade, which could be viewed as the ''effective cooling-off period'', is calculated).

Using Form 144 data provided by The Washington Service for a more recent period (January 2, 2018–October 19, 2021), we find that the median (mean) cooling off period is 72 (105) days, with 13.5 percent of first trades pursuant to a plan occurring within thirty days of the plan date and 40.7 percent occurring within 60 days of the plan date.[119] Shorter cooling off periods are also associated with higher trade sizes as trades occurring within 90 days of plan adoption have a median size of $670,000 compared with a median size of $378,000 for those trades occurring more than six months after plan adoption. Further, single-trade plans constitute approximately 40% of plans during the time period examined.

A 2016 industry survey also examined Rule 10b5–1 plan practices at public companies.[120] In the survey (i) 77 percent of the respondents had a mandatory cooling-off period of 60 days or less and a cooling-off period of 30 days was the most common cooling-off period among respondents (41 percent); (ii) 98 percent of the respondents reviewed and approved insiders' Rule 10b5–1 plans to some degree; (iii) 55 percent of the respondents allowed termination of plans and 40 percent of the respondents allowed modification of plans; and (iv) 18 percent of respondents allowed insiders to maintain multiple overlapping plans, while 82 percent disallowed multiple overlapping plans.[121]

Various studies have sought to examine the potential use of MNPI for trading under Rule 10b5–1 by looking at the returns around trades under such plans (with the caveats about data availability). Larcker et al. (2021) document abnormal profits following some Rule 10b5–1(c)(1) trades, which is indicative of potential informed trading by insiders under such plans. For example, the study shows abnormal industry-adjusted returns over a six-month period following the first sale to be −2.5 percent for plans with a cooling-off period of less than 30 days and −1.5 percent for plans with a cooling-off period of between 30 and 60 days, but no evidence of such a post-insider sale price drop when the cooling-off period was longer than 60 days. The study also finds that the abnormal return is between −2 percent and −3 percent for plans that execute a sale in the window between when the plan is adopted and that quarter's earnings announcement, but no price drop is found following sales after the earnings announcement. Similarly, they find that insider sales under all single-trade plans are associated with a share price decrease after the sale.[122] Negative abnormal returns after insider sales under Rule 10b5–1(c)(1) plans indicate potential informed trading by insiders ahead of negative news. A lack of such negative returns after insider sales under plans with longer cooling off periods is suggestive of inside information becoming stale during the cooling off period, though it could also indicate low statistical power. Similarly, a lack of negative returns when insider sales occur after the quarter's earnings announcement may suggest less potential for informed selling once the earnings information has been made public; while this result could also indicate low power, it is intuitive that information is more evenly shared following the earnings announcement.[123]

Several other studies document abnormal returns following trading by insiders who use Rule 10b5–1 plans. For example, a 2009 study of the use of Rule 10b5–1 plans finds that ''[p]articipating insiders' sales systematically follow positive and precede negative firm performance, generating abnormal forward-looking returns larger than those earned by nonparticipating colleagues,'' that ''a substantive proportion of randomly drawn plan initiations are associated with pending adverse news disclosures,'' and that ''early sales plan terminations are associated with pending positive performance shifts.'' [124] A 2016 study examined insider sales at financial institutions prior to the 2008 financial crisis and found that ''net insider sales in the 2001Q2–2007Q2 pre-financial crisis quarters predict not-yet-reported non-performing securitized loans and securitization income for those quarters, and that net insider sales during 2006Q4 predict write-downs of securitization-related assets during the 2007Q3–2008Q4 crisis period'' and, crucially for this analysis, that ''insiders avoid larger stock price losses through 10b5–1 plan sales than through non-plan sales.'' [125] A different 2016 study presents ''evidence consistent with insiders using 10b5–1 plans to sell stock in

2020 and the adoption date of any corresponding 10b5–1 plans. . . In total, we have data on 20,595 plans, which covers the trading activity by 10,123 executives at 2,140 unique firms. These plans are responsible for a total of 55,287 sales transactions totaling $105.3 billion during our sample period. Average (median) trade size is $1.9 million ($0.4 million) . . .'' The analysis based on Form 144 data has the advantage of not being subject to voluntary reporting bias. However, as a caveat, planned resales reported on Form 144 represent a subset of all trades and may not be representative of all Rule 10b5–1 trades by insiders (*e.g.,* of purchases, or of sales of unrestricted stock). By comparison, Mavruk and Seyhun (2016) examine a larger sample of plan trades identified by a voluntary Rule 10b5–1 checkbox on beneficial ownership forms. They examine transactions for ''an average of 14,211 insiders in 3875 firms for each year between 2003 and 2013.'' *See* Taylan Mavruk and Nejat H. Seyhun, Do SEC's 10B5–1 Safe Harbor Rules Need to Be Rewritten, *Columbia Business Law Review,* 133–183 (2016). Relatedly, Hugon and Lee (2016) utilize a sample of ''voluntary disclosures of 10b5–1 plan participation in SEC Form 4 filed between October 2000 and December 2010.'' *See* Artur Hugon and Yen-Jung Lee, SEC Rule 10b5–1 Plans and Strategic Trade around Earnings Announcements, *Arizona State University and National Taiwan University* (Working Paper) (2016). *See also See* Rik Sen, Are Insider Sales Under 10b5–1 Plans Strategically Timed?, *New York University* (Working Paper) (2008); Eliezer M. Fich, Robert Parrino, and Anh L. Tran, When and How Are Rule 10b5–1 Plans Used for Insider Stock Sales?, *Drexel University, University of Texas at Austin, and City University of London* (Working Paper) (2021) (also utilizing Form 4 data). Data on Rule 10b5–1 trades by issuers is not available.

[118] *See* Larcker et al. (2021).

[119] 13.5 percent of trades occur within 0–30 days. 27.2 percent of trades occur within 31–60 days, and 22.6 percent within 61–90 days. In total, 63.3 percent of trades occur within 90 days of the plan date and 83.7 percent of plans commence trading within six months.

[120] *See* Defining the Fine Line: Mitigating Risk with 10b5–1 Plans, Morgan Stanley/Shearman & Sterling LLP, *available at https://advisor.morganstanley.com/capitol-wealth-management-group/documents/field/c/ca/capitol-wealth-management-group/Defining_the_Fine_LineLocked_Version.pdf.* The survey included public company members of the Society of Corporate Secretaries & Governance Professionals. The respondents and their practices related to Rule 10b5–1 plans are not necessarily representative of all companies subject to the proposed amendments and their Rule 10b5–1 plan policies and practices. Separately, the survey stated that that 51 percent of S&P 500 companies had Rule 10b5–1 plans in 2015.

[121] *Id.*

[122] The data does not show the dates of all scheduled trades, only the dates of executed trades. Thus, some ''single-trade'' plans may be multi-trade plans in progress, or multi-trade plans with all but one trade cancelled.

[123] As a caveat, the tests of statistical significance of the differences are not shown, so we cannot assess whether the economic differences discussed above have statistical significance.

[124] *See* Alan D. Jagolinzer, SEC Rule 10b5–1 and Insiders' Strategic Trade, 55(2) *Management Science,* 224–239 (2009).

[125] *See* Stephen G. Ryan, Jennifer Wu Tucker, and Ying Zhou Securitization and Insider Trading, 91(2) *Accounting Review,* 649–675 (2016).

advance of disappointing earnings results.'' [126] The study further finds that some of the more aggressive insider trading on earnings information shifted into Rule 10b5–1 plans after adoption of the rule.[127] The study also finds that ''these insiders make the following types of trades: non-routine, infrequent, one-time, close to the plan initiation date, and during traditional blackout periods.'' [128] Another 2016 study presents evidence of ''insiders selling shares prior to imminent bad earnings news through their Rule 10b5–1 trading plans.'' [129] A 2020 study finds that ''public companies disproportionately disclose positive news on days when corporate executives sell shares under predetermined Rule 10b5–1 plans,'' with such disclosure of good news on Rule 10b5–1 selling days being most prevalent ''in the health care sector and among mid-cap firms.'' [130] The study further shows that ''stock prices reverse after high levels of Rule 10b5–1 selling on positive news days, and that the price reversal increases with the share volume of Rule 10b5–1 selling.'' [131]

However, a 2008 study finds ''no significant difference in stock price performance following plan sales and non-plan sales.'' [132] The study shows that ''price contingent orders (*e.g.,* limit orders), a common feature in trading plans, give rise to empirical patterns that have been taken as evidence of strategic timing of sales.'' [133] A different 2016 study finds negative abnormal returns after insider sales under Rule 10b5–1(c)(1), as well as positive abnormal returns after insider purchases under Rule 10b5–1(c)(1) (over a one-month holding period).[134] However, the study does not find significant differences between the abnormal returns following insider trades under Rule 10b5–1(c)(1) and other insider trades.[135] Finally, a 2021 study finds that ''non-plan sales are, on average, preceded by a larger price run-up (3.0 percent versus 1.4 percent) and followed by a larger price decline (−1.6 percent versus –1.0 percent) than plan sales . . . consistent with greater opportunistic behavior by CEOs who trade outside of Rule 10b5–1 plans.'' [136] Further, focusing on ''the 25 percent of sales with the largest ratio of transaction value to the CEO's most recent total annual compensation . . . the average cumulative abnormal return (''CAR'') during the 40 trading days before the sale is 3.68 percent for non-plan sales and 1.77 percent for plan sales . . . the average CAR for the 40 trading days after the sale is –2.24 percent for non-plan sales and –2.41 percent for plan sales.'' [137] The study concludes that ''the overall level of opportunistic behavior is smaller for sales within Rule 10b5–1 plans than for sales outside of such plans'' but that ''CEOs who have a lot of money at stake are able to trade opportunistically even if the transaction is executed under a Rule 10b5–1 plan.'' [138] The findings of these studies differ in part because of differences in the sample used for analysis (sample period and whether the data is based on beneficial ownership forms or Form 144 filings) and methodology (including, among other assumptions, whether insider trading under Rule 10b5–1(c)(1) is examined in isolation or in comparison with other insider sales and purchases). As noted above, the lack of data on Rule10b5–1 plans can make it difficult to extrapolate from the available evidence to all trading under Rule 10b5–1(c)(1). However, overall, the evidence on the use of Rule 10b5–1 plans in the discussed studies raises concerns about informed trading by insiders.

Data on companies' use of Rule 10b5–1 plans are very limited. Some companies voluntarily disclose on Form 8–K their use of Rule 10b5–1 plans to carry out stock repurchases. One study examining different repurchase methods documented ''at least 200 announcements of repurchases using Rule 10b5–1 per year from 2011 to 2014. . . [In 2014] 29% [of repurchase announcements] included a 10b5–1 plan.'' [139] While the use of Rule 10b5–1 plans by issuers can fluctuate year to year, the study suggests that approximately 200 companies could be affected by the proposed amendments. Based on a textual search of calendar year 2020 filings, we similarly estimate that approximately 220 companies disclosed share repurchase programs executed under a Rule 10b5–1 plan.[140] Due to a lack of a trade reporting requirement similar to that for officers and directors, we are not aware of data or studies on companies' actual trading under Rule 10b5–1 plans.

Companies also may use Rule 10b5–1 plans for sales of securities. Due to a lack of reporting, we cannot estimate the prevalence of such plans.

2. Benefits

The main benefit of the proposed amendments to Rule 10b5–1(c)(1) is a reduction in the potential for insider trading based on MNPI by officers, directors, and companies (discussed in greater detail in Section IV.A above). Below we discuss how each of the proposed amendments to Rule 10b5–1(c)(1) is expected to reduce such insider trading. Crucially, we expect the

[126] *See* Artur Hugon and Yen-Jung Lee, SEC Rule 10b5–1 Plans and Strategic Trade around Earnings Announcements, Arizona State University and National Taiwan University (Working Paper) (2016).

[127] *Id.*

[128] *Id.*

[129] *See* Jonathan A. Milian, Insider Sales Based on Short-term Earnings Information, 47 *Rev. Quant. Finan. Acc.* (2016) 47, 109–128 (examining data on insider sales under Rule 10b5–1 based on beneficial ownership filings from August 2004 through May 2010). As a caveat, the study specifies that the plan identification may be imprecise: it ''use[s] the timing of insiders' Rule 10b5–1 trades relative to each other in order to infer a sales plan,'' ''[g]iven the lack of disclosure requirements in SEC Rule 10b5–1 and the nature of the data.''

[130] *See* Joshua Mitts, Insider Trading and Strategic Disclosure, *Columbia University* (Working Paper) (2020).

[131] *Id.*

[132] *See* Rik Sen, Are Insider Sales Under 10b5–1 Plans Strategically Timed?, New York University (Working Paper) (2008). The study uses Form 4 data from January 2003—June 2006. As an important caveat, reporting of 10b5–1 trades on Form 4 is voluntary. Thus, trades classified as ''non-10b5–1'' trades in the study may include 10b5–1 plan trades.

[133] *Id.*

[134] *See* Taylan Mavruk and Nejat H. Seyhun, Do SEC's 10B5–1 Safe Harbor Rules Need to Be Rewritten, *Columbia Business Law Review,* 133–183 (2016).

[135] *Id.* As noted above, due to voluntary reporting of the Rule 10b5–1 flag on beneficial ownership forms, trades classified as ''non-10b5–1'' trades in the study may include Rule 10b5–1 plan trades.

[136] *See* Eliezer M. Fich, Robert Parrino, and Anh L. Tran, When and How Are Rule 10b5–1 Plans Used for Insider Stock Sales?, Drexel University, University of Texas at Austin, and City University of London (Working Paper) (2021). This study examines ''11,250 stock sales by 1,514 CEOs at 1,312 different public firms during the 2013 to 2018 period. Of these stock sales, 6,953 are identified in SEC Form 4 filings as executed through Rule 10b5–1 plans.'' As noted above, due to voluntary reporting of the Rule 10b5–1 flag on beneficial ownership forms, trades classified as ''non-10b5–1'' trades in the study may include Rule 10b5–1 plan trades.

[137] *Id.* Cumulative abnormal returns are returns in excess of returns that would be expected given the security's systematic risk over the period of time in question.

[138] *Id.*

[139] *See* Alice Bonaimé, Jarrad Harford, and David Moore, Payout Policy Trade-Offs and the Rise of 10b5–1 Preset Repurchase Plans, 66(6) *Management Science,* 2762–2786 (2020). The study does not provide evidence of companies' use of such plans for insider trading through issuer repurchases. The study focuses on such plans being less flexible and representing a stronger pre-commitment than open market repurchases. The study finds that, ''[c]onsistent with [such] plans signaling commitment, Rule 10b5–1 repurchase announcements are associated with greater and faster completion rates, with more positive market reactions, and with more dividend substitution than open market repurchases.''

[140] The estimate is based on a textual search of calendar year 2020 filings of Forms 10–K, 10–Q, 8–K, as well as amendments and exhibits thereto in Intelligize, using keywords ''10b5–1 repurchases'' or a combination of keywords ''repurchase plan'' and ''10b5–1''. Due to a lack of standardized presentation and the unstructured *(i.e.,* non-machine-readable) nature of the disclosure, this estimate is approximate and may be over- or under-inclusive.

proposed provisions to work in tandem to substantially reduce or eliminate insider trading through Rule 10b5–1 plans. In particular, the safeguards provided by the proposed certification requirement are expected to reinforce the effects of the proposed cooling-off periods and the restrictions on multiple overlapping and single-trade plans. The cooling-off period is expected to work in tandem with the exclusion of multiple overlapping plans from Rule 10b5–1(c)(1) in addressing opportunistic plan cancellations based on MNPI. Thus, while we separately discuss below the benefits of each individual provision for reducing insider trading, in combination the proposed amendments should also generate synergies.

As discussed in Section IV.A above, because the Rule 10b5–1(c)(1) affirmative defense is elective, if officers, directors, or companies find the provisions as amended to be overly burdensome, they may elect not rely on it.[141] To the extent the migration of trading outside of Rule 10b5–1 plans results, in some instances, in an increase, or no change, in the incidence of insider trading, the benefits of the proposed amendments may be attenuated or offset. The magnitude of the described effect would depend on the extent to which other mechanisms (such as legal liability, enforcement actions, listing standards, reputational concerns, as well as corporate governance mechanisms) counteract insider trading incentives and any changes that companies implement to their insider trading policies. Companies may make changes in response to the proposed disclosure requirements of Item 408 of Regulation S–K, discussed in detail in Section IV.C below.

In the subsections below we discuss the individual benefits of these proposed conditions. In Section IV.B.2.v below, we discuss the proposed amendments as they apply to companies' plans.

i. Cooling-Off Period for Officers and Directors [142]

The Commission is proposing as a condition to the availability of the affirmative defenses under Rule 10b5–1(c)(1) to officers and directors a 120-day cooling-off period before any purchases or sales under the trading arrangement may commence after the date of adoption of a new or modified trading arrangement. The cooling-off period would prevent officers and directors aware of MNPI from being able to trade under the Rule 10b5–1 plan immediately after adopting or modifying such a plan. This would substantially weaken insider incentives to enter or modify Rule 10b5–1 plans based on any MNPI with a horizon that is shorter than the proposed cooling-off period. The 120-day length of the proposed cooling-off period would largely prevent officers and directors from capitalizing on unreleased MNPI for the upcoming quarter.[143] It also is consistent with, or exceeds, several recommendations regarding such cooling-off periods.[144] To the extent that MNPI may be time-sensitive, we expect such a cooling-off period to effectively discourage officers and directors from adopting new or modified plans on the basis of MNPI.

Some evidence of the extent to which cooling-off periods could prevent insider trading is presented in Larcker et al. (2021). In that study, approximately 14 percent of insider Rule 10b5–1 plans have the first trade within 30 days of plan adoption, 39 percent within the first 60 days, and 82 percent within 6 months.[145] Shorter periods between plan adoption and first trade are associated with worse returns after the sale, which implies that more insider trading occurs in cases of trading commencing closer to plan adoption.[146]

The proposed 120-day cooling-off period for officer and director Rule 10b5–1 trading arrangements would also help deter trades under a newly adopted or modified plan before the release of that quarter's earnings announcement. Trades under Rule 10b5–1(c)(1) prior to an earnings announcement appear to be more likely to involve insider trading behavior. For example, Larcker et al. (2021) find that ''38 percent of plans adopted in a given quarter also execute trades before that quarter's earnings announcement (*i.e.,* in the 1 to 90 days prior to earnings [sic]. . . Sales occurring between the adoption date and earnings announcement are about 25 percent larger than sales occurring more than six months after the earnings announcement . . . plans that execute a trade in the window between when the plan is adopted and that quarter's earnings announcement anticipate large losses and foreshadow considerable stock price declines.'' [147]

The proposed cooling-off periods would apply to directors and Rule 16a–1(f) officers but not to other natural persons. Directors and Rule 16a–1(f) officers (1) are generally more likely to be involved in making or overseeing corporate decisions about whether and when to disclose information; and (2) are generally more likely to be aware of MNPI.[148] Given the significant loss of flexibility associated with a cooling-off period, the proposed approach of exempting natural person insiders that are not officers or directors from the proposed cooling-off period would tailor the application of the additional conditions of the affirmative defense in a way that better balances the additional costs to insiders with the investor protection benefits.

ii. Restricting Multiple Overlapping and Single-Trade Rule 10b5–1 Trading Arrangements

The Commission is proposing as a condition to the affirmative defense to disallow the use of multiple overlapping Rule 10b5–1 plans for open market trades in the same class of securities. This means that an insider or company would not be able to use the affirmative defense of Rule 10b5–1(c)(1) to maintain two or more Rule 10b5–1 plans for open market trades in the same security class. In combination with the proposed cooling-off period, this provision is expected to reduce the likelihood that insiders or companies would enter into multiple, overlapping plans and selectively cancel some of the plans at a later time based on MNPI, while

[141] *But see infra* note 157.

[142] The cooling-off periods proposed for Rule 10b5–1 trading arrangements of issuers are discussed in Sections IV.B.2.v and IV.B.3.v below.

[143] *See, e.g.,* Larcker et al. (2021); *see also supra* note 126 and accompanying text.

[144] *See, e.g.,* Council of Institutional Investors, Request for rulemaking concerning amending Rule 10b5–1 or further interpretive guidance regarding the circumstances under which Rule 10b5–1 trading plans may be adopted, modified, or cancelled, December 28, 2012, at p. 3, *available at https://www.sec.gov/rules/petitions/2013/petn4-658.pdf* (recommending a minimum three-month waiting period); Yafit Cohn and Karen Hsu Kelley, Simpson Thacher, Discusses Combating Securities Fraud Allegations With10b5–1 Trading Plans, August 10, 2017, *available at https://clsbluesky.law.columbia.edu/2017/08/10/simpson-thatcher-discusses-combatting-securities-fraud-allegations-with10b5-1-trading-plans/* (recommending that ''insiders wait 30 to 90 days before selling stock under the trading plan for the first time''); David B.H. Martin, Keir D. Gumbs, David L. Kornblau, Matthew C. Franker, and Stephanie W. Bignon, Rule 10b5–1 Trading Plans: Avoiding the Heat, Bloomberg BNA Securities Regulation & Law Report, 45 *SRLR* 438, 2013 (referring to the three-month cooling-off period recommended by the Council of Institutional Investors and stating that ''[w]aiting periods of this duration, or those which restrict trading until after issuance of the next regular earnings release, may assist insiders in demonstrating good faith and that trades under a Rule 10b5–1 plan were not designed to take advantage of material nonpublic information.''). In a February 10, 2021 letter, Senators Warren, Brown and Van Hollen recommended the Commission consider a four to six-month cooling-off period between adoption, or modification of a plan and commencement or recommencement of trading under the plan.

[145] *See* Larcker et al. (2021), at p. 2.

[146] *Id,* at p. 2.

[147] *Id.,* at pp. 2–3.

[148] *See, e.g.,* Mavruk and Seyhun (2016), at p. 179.

availing themselves of Rule 10b5–1(c)(1)'s affirmative defense.[149] The effects of this provision may be modest to the extent that companies already prohibit multiple Rule 10b5–1 plans,[150] or to the extent that companies may allow a trading plan not reliant on Rule 10b5–1(c)(1) to exist in conjunction with a trading plan reliant on Rule 10b5–1(c)(1).[151]

The proposed unavailability of the affirmative defense for multiple overlapping trading arrangements would not apply to transactions in which directors, officers, or employees acquired or sold for themselves securities as participants in ESOPs or DRIPs. This provision is expected to preserve the benefits of flexibility for participants in such plans. The proposed exclusion of multiple overlapping plans would not apply to trades in different classes of securities. For example, a plan for Class A common stock and an overlapping plan for Class B common stock or for preferred stock would still be eligible for the affirmative defense under the proposed amendments, provided that the other conditions are met. Because different classes of shares can have significantly different cash flow and voting rights, this provision is expected to preserve the benefits of flexibility for those plan participants that seek to implement independent purchase or disposition strategies for different share classes through separate, overlapping plans.

The Commission is also proposing to limit the number of single-trade trading arrangements under the Rule 10b5–1(c)(1) affirmative defense to a maximum of one such trading arrangement in the prior 12-month period. This is expected to reduce the likelihood that plan participants would be able to repeatedly profit from ''one-off,'' ad hoc trades based on previously undisclosed MNPI while availing themselves of the protections of the Rule 10b5–1(c)(1) affirmative defense.[152] The incremental benefit of the proposed limitation may be somewhat attenuated if insiders relying on single-trade plans are largely driven by one-time liquidity needs, or if they are effectively deterred from using MNPI by the cooling-off period or certification and good faith provisions also being proposed. The benefit would also be attenuated to the extent that some multi-trade plans may combine a single trade based on MNPI with additional liquidity trades. Nevertheless, there could be some benefit to limiting the frequency of single-trade arrangements to the extent that some MNPI has a longer horizon than the cooling-off period.

iii. Director and Officer Certifications

The Commission is also proposing certification requirements as a condition of the amended Rule 10b5–1(c)(1) affirmative defense for trading arrangements of officers and directors. The proposed certification requirement would reinforce their awareness of their legal obligations under the Federal securities law related to the trading in the issuer's securities. Thus, the proposed certification requirement is expected to act as a deterrent to insider trading based on MNPI by officers and directors through such plans.

iv. Requiring That Trading Arrangements Be Operated in Good Faith

The proposed amendments would expand the good faith provision to specify that all Rule 10b5–1 plans must be operated in good faith, as a condition to the availability of the affirmative defense. The amended good faith requirement is expected to further deter potential insider trading as part of operating such plans, and thus alleviate associated incentive distortions. For instance, by making clear that both the initial entry into the plan as well as the operation of the plan, including the circumstances surrounding any trading under the plan, must be conducted in good faith, the proposed amendment might discourage insiders from improperly influencing the timing and content of disclosure motivated by an attempt to profit from MNPI while a plan is ongoing (one of the economic costs of insider incentive distortions due to insider trading discussed in Section IV.A above).[153] The proposed amendments are expected to benefit investor protection by helping deter fraudulent and manipulative conduct throughout the duration of the trading arrangement.

v. Issuer Trading Arrangements Under Rule 10b5–1(c)(1)

Issuers would be subject to the proposed 30-day cooling-off period; restrictions on single-trade and multiple overlapping Rule 10b5–1 trading arrangements; and the proposed requirement that trading arrangements be operated in good faith. These proposed conditions would apply to trading plans adopted by companies, including, for example, those designed to facilitate repurchasing equity to return cash to shareholders.

Companies' attempts to make use of MNPI through Rule 10b5–1 plans may have economic costs, and limiting such trading may benefit investors and markets.[154] Companies' efforts to use MNPI can incentivize delays and distortions in disclosure, which exacerbate information asymmetries between companies and outside investors. Discovery of a company's insider trading based on MNPI may lead to reputational costs for companies and decreased confidence of investors in purchasing the shares offered by the issuer. The risk of adverse selection due to trading against an informed trader that is the company itself may discourage uninformed traders from secondary trading in the issuer's shares. Thus, reducing the opportunity for insider trading by companies under Rule 10b5–1(c)(1) may result in benefits for investor protection and capital

[149] As a result, the benefit of strategically canceling an existing plan based on MNPI would be significantly reduced for many insiders or issuers, compared to a scenario in which an insider or issuer has multiple plans without cooling off periods, which is permitted today. Under the proposal, an insider or issuer that cancels a plan would be subject to disclosure obligations, as well as a cooling-off period with respect to any new plan, which makes a strategically planned cancellation significantly less attractive for an insider or issuer that plans to continue trading. As proposed, this cooling-off period could not be effectively shortened or eliminated by having multiple plans with similar or staggered adoption dates, because of the proposed restriction on multiple overlapping plans for open-market trades in the same class of securities.

[150] A 2016 industry survey found that 82 percent of respondents do not allow multiple, overlapping Rule 10b5–1 plans. *See* Defining the Fine Line: Mitigating Risk with 10b5–1 Plans, Morgan Stanley/Shearman & Sterling LLP, *available at https://advisor.morganstanley.com/capitol-wealth-management-group/documents/field/c/ca/capitol-wealth-management-group/Defining_the_Fine_LineLocked_Version.pdf, supra* note 120. The data is based on the responses of the surveyed public company members of the Society of Corporate Secretaries and Governance Professionals and may not be representative of other companies.

[151] *But see infra* note 157 and accompanying text. Also, trading under a plan not reliant on Rule 10b5–1 could entail additional legal costs and limitations.

[152] For instance, some suggestive evidence is presented in Larcker et al. (2021) (finding that, for single-trade plans, share prices decreased following insider sales under Rule 10b5–1). As a caveat, the data does not show the dates of all scheduled trades, only the dates of executed trades. Thus, some ''single-trade'' plans may be multi-trade plans in progress, or multi-trade plans with all but one trade cancelled. *See also* Milian (2016), *supra* note 129 (finding that sales under Rule 10b5–1 plans with few trades are associated with more negative subsequent returns than sales under plans with more trades). As a caveat, the Milian (2016) study does not specifically compare single-trade to multi-trade plans. Further, the number of trades in the plan is highly correlated with the duration of the plan in the study, giving rise to potential confounding.

[153] *See supra* note 106 and accompanying and following text.

[154] *See* Jesse M. Fried, Insider Trading via the Corporation, 162(4) *University of Pennsylvania Law Review,* 801–840 (2014).

formation and may promote fair, orderly, and efficient markets.

Several factors make it more difficult to predict with certainty the overall extent of the investor protection benefits of the proposed amendments as they apply to issuers. As noted in Section IV.B.1 above, there are only limited data on trading by companies under Rule 10b5–1 plans. Further, some of the economic effects of issuer trades differ from those of natural person insiders. In particular, insider trading by the issuer may benefit existing shareholders, albeit at the expense of other investors.[155]

3. Costs

The proposed amendments will impose additional conditions on the use of the Rule 10b5–1(c)(1) affirmative defense by insiders and companies. All else equal, the proposed conditions on the use of Rule 10b5–1 plans would make it more complicated for insiders and companies to sell or buy shares under such plans. The proposed conditions that would impose additional barriers to sales of company stock under Rule 10b5–1(c)(1) could result in decreased liquidity of the insider's holdings, including reduced ability to meet unanticipated liquidity needs (such as emergency or unplanned expenses), as well as potential constraints on portfolio rebalancing and achieving optimal portfolio diversification and tax treatment. Greater difficulty of selling shares under Rule 10b5–1 plans would impose illiquidity costs on insiders and potentially reduce the value of their compensation.[156]

In general, the economic costs of the proposed amendments to Rule 10b5–1(c)(1) might be partly mitigated by the voluntary nature of the Rule 10b5–1(c)(1) affirmative defense. However, although Rule 10b5–1(c)(1) is voluntary, some companies' insider trading policies may require officers and directors to rely on Rule 10b5–1.[157] Insiders and companies that find the proposed conditions to be too restrictive might elect not to rely on the affirmative defense for their trading. However, insiders and companies that choose not to rely on Rule 10b5–1(c)(1) in conducting their trading may incur other costs (*e.g.,* additional cost of counsel or other experts to evaluate whether trades conducted pursuant to a plan not reliant on Rule 10b5–1(c)(1) or conducted without a trading plan are compliant with the Exchange Act and Commission regulations, and a potential increase in legal liability risk), as well as the loss of the ability to schedule execution of trades during blackout periods (whereas trades under Rule 10b5–1 plans generally can be executed during blackout periods). The effect of the proposed conditions on the Rule 10b5–1(c)(1) affirmative defense for companies may be less significant because companies may be able to rely on the Rule 10b5–1(c)(2) affirmative defense, which is not available to natural persons.[158] To the extent insiders and companies are not aware of MNPI, they may also elect to trade without a plan outside of a blackout window.

Faced with the additional conditions on the use of Rule 10b5–1 plans, some insiders may seek to reduce holdings of company shares in general (through buying fewer shares, selling shares more quickly when eligible, and negotiating for cash pay in lieu of equity pay), to the extent feasible given companies' share ownership guidelines and compensation policies.[159] The proposed amendments also would make it more difficult for insiders to purchase company shares if they wish to do so under a Rule 10b5–1 plan.[160] Reduced insider equity ownership would in turn tend to reduce incentive alignment between insiders and shareholders (to the extent such incentive alignment existed in the first place and was not undermined by existing agency conflicts discussed in greater detail in Section IV.A above), potentially resulting in less efficient corporate decisions. In some cases, insiders facing illiquidity risk may seek higher total pay to compensate for the trading restrictions.[161] The cost to issuers of potential shifts in executive compensation in response to the proposed conditions (whether in the form of additional compensation for insiders, or changes in compensation structure that weaken insider incentives) would be borne by existing shareholders, who are also the primary beneficiaries of the added protections afforded by these changes.

In the subsections below we discuss the individual costs these conditions could impose on affected plan participants. In Section IV.B.3.v below, we discuss the proposed amendments as they would apply to companies' plans.

i. Cooling-Off Period for Officers and Directors

The proposed 120-day cooling-off period condition for officers and directors would restrict their ability to

[155] In addition, it is somewhat less clear if insider trading by the company will result in corporate investment distortions discussed in Section IV.A; the effect would depend, in large part, on whether the interests of insiders that make the actual corporate decisions are aligned with those of the company in conjunction with such trading (*i.e.,* whether the insider has the same MNPI and either trades in the same direction as the company, or abstains from trading in the opposite direction of the trading by the company based on MNPI). For example, a 2014 article argues that insiders indeed profit from companies' MNPI-based trading. *See* Jesse M. Fried, Insider Trading via the Corporation, 162(4) *University of Pennsylvania Law Review,* 801–840 (2014).

[156] *See* Lisa Meulbroek, The Efficiency of Equity-Linked Compensation: Understanding the Full Cost of Awarding Executive Stock Options, 30 (2) *Financial Management,* 5–44 (2001). *See also infra* note 159 and accompanying and following discussion.

[157] A 2016 industry survey found that 17 percent of surveyed companies required the use of Rule 10b5–1 plans for trading. *See* Defining the Fine Line: Mitigating Risk with 10b5–1 Plans, Morgan Stanley/Shearman & Sterling LLP, *available at https://advisor.morganstanley.com/capitol-wealth-management-group/documents/field/c/ca/capitol-wealth-management-group/Defining_the_Fine_LineLocked_Version.pdf, supra* note 120.

[158] *See supra* note 11.

[159] Compensation committees may continue to award incentive pay even if insiders might prefer to reduce exposure to the company's equity. *See, e.g.,* Darren T. Roulstone, The Relation Between Insider-Trading Restrictions and Executive Compensation, 41(3) *Journal of Accounting Research,* 525–551 (2003) (showing that firms restricting insider trading ''use more incentive-based compensation and their insiders hold larger equity incentives relative to firms that do not restrict insider trading''). Companies may also impose share ownership guidelines and holding requirements. *See, e.g.,* Bradley W. Benson, Qin Lian, and Qiming Wang, Stock Ownership Guidelines for CEOs: Do They (Not) Meet Expectations?, 69 *Journal of Banking and Finance,* 52–71 (2016); see also, *e.g.,* Equilar, Executive Stock Ownership Guidelines, March 9, 2016, *available at https://www.equilar.com/reports/34-executive-stock-ownership-guidelines.html* (finding that the percentage of Fortune 100 companies that disclose ownership guidelines or holding requirements in any form was 87.6 percent in 2014); John R. Sinkular and Don Kokoskie, Stock Ownership Guideline Administration, *Harvard Law School Forum on Corporate Governance,* June 11, 2020, *available at https://corpgov.law.harvard.edu/2020/06/11/stock-ownership-guideline-administration/*; NASPP, 5 Trends in Stock Ownership Guidelines, December 15, 2020, *available at https://www.naspp.com/Blog/December-2020/5-Trends-in-Stock-Ownership-Guidelines* (finding that ''[e]ighty-five percent of respondents to the 2020 survey currently impose ownership guidelines on executives'').

[160] However, the likelihood of choosing a Rule 10b5–1 plan for a purchase is much lower than the likelihood of electing to use Rule 10b5–1(c)(1) for a sale (with the caveats about data availability). One study noted that approximately 2.3 percent of purchases versus 22.4 percent of sales were reported to be undertaken using Rule 10b5–1 plans. *See* Taylan Mavruk and Nejat H. Seyhun, Do SEC's 10B5–1 Safe Harbor Rules Need to Be Rewritten, *Columbia Business Law Review,* 133–183 (2016).

[161] *See* Darren T. Roulstone, The Relation Between Insider-Trading Restrictions and Executive Compensation, 41(3) *Journal of Accounting Research,* 525–551 (2003) (finding that ''firms that restrict insider trading pay a premium in total compensation relative to firms not restricting insider trading, after controlling for economic determinants of pay.''); see also M. Todd Henderson, Insider Trading and CEO Pay, 64(2) *Vanderbilt Law Review,* 503–556 (2011) (finding that ''executives whose trading freedom increased using Rule 10b5–1 trading plans experienced reductions in other forms of pay to offset the potential gains from trading'').

purchase or sell shares pursuant to a Rule 10b5–1 plan for the duration of the cooling-off-period. As a result of that condition, some insiders may choose not to rely on a Rule 10b5–1 plan for future trading.[162] Insiders that sell shares without relying on a Rule 10b5–1 plan are likely to incur additional costs and limitations. The economic costs of decreased liquidity due to Rule 10b5–1 plan restrictions were discussed in detail in Section IV.B.3 above.

Because trading during the four months following adoption of a Rule 10b5–1 plan appears to be common based on available data summarized in Section IV.B.1 above, the proposed amendments are likely to have an adverse impact on insiders, resulting in the economic costs associated with the decreased ability to trade and, especially, divest holdings, which were described in greater detail in Section IV.B.3 above.[163]

ii. Restricting Multiple Overlapping and Single-Trade Rule 10b5–1 Trading Arrangements

The proposed exclusion from the Rule 10b5–1(c)(1) affirmative defense of multiple overlapping plans for open market trades in the same class of securities would limit the flexibility of insiders in using Rule 10b5–1 plans to purchase or sell their shares. The multiple-plan exclusion might be less restrictive to the extent that insiders can anticipate and combine all planned open-market purchases and sales of securities of the same class into a single plan. The focus of the proposed exclusion on multiple plans for open-market trades is expected to reduce the cost of the proposed requirement for insiders with purchases and sales as part of an ESOP or DRIP, in addition to open-market purchases or sales. The incremental costs of the proposed amendment could be limited to the extent that companies already disallow such plans,[164] or may allow the existence of a trading plan under Rule 10b5–1(c)(1) concurrently with a plan not reliant on Rule 10b5–1(c)(1).[165] While insiders may seek to avoid the costs of the prohibition on multiple Rule 10b5–1 plans by terminating an existing plan and adopting a new plan, the proposed cooling off period would be applicable to the modified plan and thus may result in other costs to insiders.

The proposed limitation on single-trade Rule 10b5–1 plans could make it costlier for insiders with repeated sporadic or ad hoc liquidity needs to divest equity holdings.[166] At the same time, the proposed approach of limiting the number of single-trade Rule 10b5–1 plans in a 12-month period, rather than restricting them entirely, would alleviate costs for insiders with occasional unexpected liquidity needs that seek to avail themselves of the affirmative defense for such a single-trade plan.

iii. Officer and Director Certifications

The Commission is proposing to require as a condition to the affirmative defense that directors and officers must personally certify that they were not aware of MNPI about the security or issuer when adopting a Rule 10b5–1 trading arrangement, including a modified trading arrangement.

The proposed certification condition would result in increased costs for insiders and companies, such as the cost of consulting with legal or other experts to help analyze whether they have material nonpublic information.

Because officers and directors, but especially officers, may often be aware of some MNPI, to the extent that officers and directors perceive the certification requirement as increasing the legal cost of, and legal risk associated with, adopting or modifying a Rule 10b5–1 plan, they may reduce their use of Rule 10b5–1 plans (and, as discussed above, potentially seek other compensation terms with less equity exposure in light of the associated illiquidity costs, which may result in additional costs to the company and its shareholders).[167] Relatedly, to the extent that companies view the proposed certification condition as increasing the legal costs and risks to the company of adoption or modification of Rule 10b5–1 plans by officers and directors, they may implement additional restrictions on insider trading under such plans, through insider trading policies and procedures. Both potential effects could result in reduced liquidity of insider holdings of company stock, the economic costs of which were discussed in greater detail in Section IV.B.3 above.

iv. Requiring That Trading Arrangements Be Operated in Good Faith

The proposed amendments specify that a trading plan must be operated in good faith as a condition to the continued availability of the affirmative defense may result in costs to obtain legal counsel and potential loss of the affirmative defense if a plan is not operated in good faith. The legal costs of the proposed amendments' requirement that a Rule 10b5–1 plan be operated in good faith would be incremental to the legal costs that plan participants already incur as a result of the existing provision that requires that a Rule 10b5–1 plan be entered into in good faith.

Because insiders, but especially officers, may often be aware of some MNPI, to the extent that they perceive the amended good faith provision as increasing the legal cost of, and legal risk associated with, adopting a new or modified Rule 10b5–1 plan, they may reduce their reliance on Rule 10b5–1 plans.

v. Issuer Trading Arrangements Under Rule 10b5–1(c)(1)

As discussed above, issuers' trading arrangements under Rule 10b5–1(c)(1) would be subject to some of the proposed additional conditions, including to the proposed restrictions on single-trade and multiple overlapping Rule 10b5–1 trading arrangements; the proposed requirement that trading arrangements be operated in good faith; and a 30-day cooling-off period. To the extent companies do not already follow such conditions as part of their existing best practices,[168] these

[162] *But see supra* note 157.

[163] *See* Larcker et al. (2021), *supra* note 118 and accompanying text. A 2016 industry survey examining Rule 10b5–1 plan practices at public companies found that 30 days was the most popular cooling-off period among their respondents (41 percent) and that for 77 percent of the respondents, the cooling-off period was 60 days or less. *See supra* note 120.

[164] For example, *see supra* note 150 and accompanying text (discussing company restrictions on multiple overlapping plans).

[165] *See supra* note 151 and accompanying text.

[166] Single-trade plans appear to be common. Based on Washington Service data from January 2016—May 2020, Larcker et al. (2021) note that 49 percent of the 10b5–1 plans in their sample cover only a single trade. Using Washington Service data for a more recent period (January 2, 2018–October 19, 2021), we estimate that single-trade plans constitute approximately 40 percent of plans during the time period examined. *See supra* note 119. The caveat about classification of plans as ''single-trade'' plans in the available data applies. *See supra* note 179.

[167] *See supra* note 159 and accompanying and following text.

[168] We lack data on the length of cooling-off periods and other terms used in companies' own Rule 10b5–1 plans. For a discussion of Rule 10b5–1 practices related to issuer repurchases, *see, e.g.,* these law firm publications providing suggestions and recommendations of best practices to issuers that use Rule 10b5–1 for repurchases and other trading: Capital Market Alert: Share Repurchases, Skadden, Arps, Slate, Meagher & Flom LLP, March 16, 2020, *available at https://www.skadden.com/en/insights/publications/2020/03/share-repurchases (suggesting, among practice tips, that ''companies consider a 'cooling-off' period before any transactions under the Rule 10b5–1 plan will occur'' and that ''[r]egular transactions over an extended period are preferable to a small number of large transactions'' and also noting that while a cooling-off period, for instance, 30 days, is recommended, some companies may begin their*

Continued

amendments would result in additional costs to companies of conducting purchases and sales under such plans and could decrease some companies' reliance on Rule 10b5–1 plans. For instance, for companies that rely on such plans to implement issuer repurchases, the costs of the proposed amendments could result in an inefficient decrease in repurchases. Costs incurred by companies could be borne by their existing shareholders.[169] In particular, the proposed 30-day cooling-off period could decrease a company's flexibility in implementing and modifying Rule 10b5–1 plans.

The costs of the amendments to companies could be partly mitigated because companies are not required to rely on Rule 10b5–1 plans. Further, companies that value financial flexibility in executing their repurchase programs may be minimally affected by changes to the rule because they might already choose not to rely on such plans today.[170] However, companies that would have otherwise relied on a Rule 10b5–1 plan under current rules might see incrementally greater costs from a choice not to rely on such a plan under the proposed rules. The costs of the proposed amendments to companies may be further mitigated by the availability of the Rule 10b5–1(c)(2) affirmative defense.[171]

4. Effects on Efficiency, Competition, and Capital Formation

We expect the proposed amendments to reduce the improper use of Rule 10b5–1 plans by insiders with MNPI. This decrease in insider trading should also limit insiders' incentives to engage in inefficient corporate decisions associated with insider trading, which were discussed in Section IV.A above. The effects of the proposed rule on the efficiency of corporate investment and other decisions are not fully certain because the proposed rule may induce insiders to adjust their holdings in response to the reduced liquidity and potentially lead companies to adjust incentive and compensation structure or other policies and practices in response to the rule.

Further, limiting insiders' ability to trade on MNPI would decrease the insiders' incentives to influence the timing and content of corporate disclosures. Timelier and higher-quality corporate disclosures would provide more information to investors, resulting in more informationally efficient share prices in the secondary market and more efficient allocation of investor capital across investment opportunities in their portfolio.

A reduction in insider trading may also benefit market efficiency.[172] Further, a lower risk of trading against an informed insider or company is expected to increase investor confidence and the willingness of market participants to buy, and trade in, the company's shares. This would indirectly make it easier for the company to raise capital from investors.

Finally, the proposed amendments may affect competition. Decreasing the ability of insiders and companies to trade on MNPI would weaken their competitive edge in trading, promoting competition among other investors in the market for the company's shares. A lower risk of an insider with a significant private information advantage trading the company's shares may strengthen the incentive of other market participants to trade the company's shares and compete in gathering and processing information about the company.

All of the effects described above would be weaker to the extent that some officers and directors may switch to trading under non-Rule 10b5–1 plans, or may trade in the absence of a plan. Whether the amendments prompt a large-scale shift of insider trading to non-Rule 10b5–1 plans would depend, in part, on how burdensome insiders find the proposed amendments and in part how company policies constrain insider use of MNPI in non-Rule 10b5–1 plans (including in response to the proposed Item 408 disclosure requirements).

It is not clear if the proposed amendments would result in meaningful competitive effects on the labor market for executive talent. We are not exempting any categories of public companies from the amendments. While the proposed Rule 10b5–1(c)(1) amendments could reduce the liquidity of holding company stock and thereby make equity ownership less attractive for insiders of public companies (as discussed in greater detail in Section IV.B.3 above), even with these additional conditions in place, the use of Rule 10b5–1 plans would remain optional, and holdings of private company shares would remain significantly less liquid.

5. Reasonable Alternatives

In the case of Rule 10b5–1 trading arrangements of natural persons, the proposed cooling-off periods and certification requirements would apply to officers and directors, while the proposed amendments to the good faith provisions and the proposed exclusion of multiple overlapping trading arrangements would apply to all natural persons' plans. As an alternative, with respect to natural persons, we could apply all of the proposed Rule 10b5–1(c)(1) amendments only to officers and directors, or only to officers.[173] Compared to the proposal, these alternatives would eliminate the costs of the rule (discussed in greater detail in Section IV.B.3 above) for the exempted plan participants but increase the risk of insider trading by such participants, compared to the proposal. The latter effects may be smaller to the extent the exempted persons are less involved in making and overseeing corporate decisions or are less likely to be aware of MNPI. As another alternative, with respect to natural persons, we could extend all of the proposed Rule 10b5–1(c)(1) amendments to all plan

purchases within days of adopting a Rule 10b5–1 plan); Robert H. Friedman, Jonathan H. Deblinger, and Kenneth S. Mantel, Navigating Public Company Equity Buybacks, 25(12) *Insights: The Corporate & Securities Law Advisor* (2011) (discussing, among others, buybacks under Rule 10b5–1 plans and recommending that issuers ''[e]stablish a waiting period for some time after a plan's adoption or modification or suspension during which trading under the plan is not permitted. While not cast in stone, a waiting period of 30 days or more is a reasonable timeframe'' and that ''issuer[s] should not maintain multiple Rule 10b5–1 plans'' and cautioning against plans ''that will only last a short period of time''); Stuart Gelfond, Arielle L. Katzman, Frank Fried, Shriver Harris, & Jacobson LLP, A Guide to Rule 10b5–1 Plans, March 24, 2016, *available at https://corpgov.law.harvard.edu/2016/03/24/a-guide-to-rule-10b5-1-plans/* (suggesting, as a ''best practice'', that issuers ''establish only one 10b5–1 plan'' and ''establish a waiting period'' and also noting that ''[b]rokers administering plans frequently impose a seasoning period as part of their own trading practices, but companies also adopt these policies. A fourteen day period is often used, but many companies have increased the waiting period to about one month.'').

[169] In the case of repurchases under trading plans, costs incurred by companies would be borne by the subset of existing shareholders that are not selling their shares to the company during the repurchase.

[170] *See supra* note 139 and accompanying text. In particular, one recent study found that ''[i]n 2014 [the latest year analyzed in the study], only 12% of repurchase announcements included an ASR [accelerated stock repurchase] whereas 29% included a 10b5–1 plan. These results are consistent with more firms preferring to maintain some level of flexibility in their repurchase programs.'' *See* Alice Bonaimé, Jarrad Harford, and David Moore, Payout Policy Trade-Offs and the Rise of 10b5–1 Preset Repurchase Plans, 66(6) *Management Science,* 2762–2786 (2020). *See also supra* note 140 and accompanying text (estimating that only approximately 220 companies disclosed share repurchase programs executed under a Rule 10b5–1 plan during calendar year 2020, with the caveat that existing disclosure of such plans is voluntary and may therefore be a low bound).

[171] *See supra* note 11.

[172] *See supra* note 109.

[173] With the caveat about data availability, where Rule 10b5–1(c)(1) use is reported, officers are far more likely to report trading under Rule 10b5–1 plans than directors.

participants. Compared to the proposal, this alternative would subject additional natural persons to the costs of the rule (discussed in greater detail in Section IV.B.3 above) but also decrease the risk of insider trading by such participants. The latter effects may be smaller to the extent that natural persons other than officers and directors are less involved in making and overseeing corporate decisions, may lack control or knowledge about the timing and substance of the company's disclosures, or are less likely to be aware of MNPI. The aggregate effects of all of the discussed alternatives, compared to the proposal, may also be smaller to the extent that Rule 10b5–1 plans tend to be most prevalent among officers.

The proposed amendments to Rule 10b5–1(c)(1) would subject Rule 10b5–1 trading arrangements of issuers to a 30-day cooling-off period, amended good faith provisions, and restrictions on single-trade and multiple overlapping Rule 10b5–1 trading arrangements. As an alternative, we could exempt issuer plans from some or all of these proposed conditions, or modify some or all of these conditions for issuers (*e.g.,* subjecting issuers to a shorter or longer cooling-off period). Compared to the proposal, a greater (smaller) number of companies might continue to find Rule 10b5–1 plans attractive for purchases and sales of securities under the alternative of less (more) stringent conditions of the affirmative defense. However, the alternative of imposing less (more) stringent conditions on issuer plans would result in a greater (lower) risk of companies adopting or modifying Rule 10b5–1 plans based on MNPI, compared to the proposal. To the extent that issuers already avail themselves of the affirmative defense under Rule 10b5–1(c)(2), which does not contain such conditions, the incremental effects of such alternatives, compared to the proposal, may be smaller. (For a more detailed discussion of the potential benefits and costs of extending the proposed amendments to issuers, see Sections IV.B.2.v and IV.B.3.v above.)

The Commission is proposing to amend Rule 10b5–1(c)(1) by adding new conditions to the affirmative defense. As an alternative, we could rescind the Rule 10b5–1(c)(1) affirmative defense altogether. Rescinding Rule 10b5–1(c)(1) would increase the costs for existing Rule 10b5–1 plan participants (such as in the form of the additional cost of legal counsel to determine whether trading arrangements, or trades not reliant on a trading arrangement, are compliant with the Exchange Act in the absence of the Rule 10b5–1(c)(1) affirmative defense). The associated costs of divesting stock in the absence of the affirmative defense would make insiders' holdings of stock less liquid and could further induce insiders to negotiate non-stock-based compensation.[174] Rescinding the Rule 10b5–1(c)(1) affirmative defense would also increase the legal liability risk for insiders that continue to trade due to greater uncertainty about whether they have complied with Rule 10b–5, as well as subject insiders to additional limitations on trading (such as restrictions on trading during blackout periods). Further, while rescinding Rule 10b5–1(c)(1) would eliminate Rule 10b5–1 plans, it would not affect the use of other trading arrangements by officers, directors, and companies. The potential shift of trading from Rule 10b5–1 plans, which contain conditions specifically tailored for investor protection, to other trading arrangements or trading outside of plans might lead to an increase in insider trading, and a negative impact on investor protection, compared to the proposal. From the companies' standpoint, the continued existence of Rule 10b5–1(c)(1) may facilitate companies' efforts to develop and implement corporate governance practices for issuer and insider trading arrangements that comply with securities laws and regulations. We expect the proposed Item 408 disclosure requirements, discussed in detail in Section IV.C below, to partly mitigate incentives to engage in insider trading under all plans, including plans that are not reliant on Rule 10b5–1(c)(1) under this alternative.

As discussed above, the proposed amendments to Rule 10b5–1(c)(1) include several new conditions of the affirmative defense (cooling-off periods, amended good faith requirements, exclusion of multiple overlapping plans for open market trades in the same class of securities, and officer and director certifications). As an alternative, we could propose to impose some, but not all, of these additional conditions. This alternative could possibly lower the aggregate costs of the rule and preserve greater flexibility, compared to the proposal, decreasing the costs discussed in the case of each of the specific provisions. However, this alternative would make the combined set of proposed amendments less effective at curbing insider trading behavior under Rule 10b5–1.

The Commission is proposing a 120-day cooling-off period for officers and directors, and a 30-day cooling-off period for issuers, after the adoption of a new or modified plan. As an alternative to the proposed cooling-off period for officers and directors, the Commission could propose a shorter cooling-off period (*e.g.,* between one and three months), a longer cooling-off period (*e.g.,* five or six months), or a variable time period until the next quarterly or annual report filing or earnings release).[175] As an alternative to the proposed 30-day cooling-off period for issuers, the Commission could propose a shorter or longer cooling-off period. A shorter cooling-off period could reduce some of the costs of a cooling-off period and preserve greater flexibility for insiders and issuers, compared to the proposal, but would increase the risk of trading based on MNPI. Conversely, a longer cooling-off period could increase costs to insiders and issuers and limit flexibility, compared to the proposal, but would decrease the risk of trading based on MNPI. A more detailed discussion of the costs and benefits of a cooling-off period that would be magnified or reduced, respectively, under these alternatives is included in Sections IV.B.2.i, IV.B.2.v, IV.C.2.i, and IV.C.2.v. The discussed effects of the alternatives would also depend on whether they differ from the existing cooling-off period practices.[176]

The proposed amendments would make the affirmative defense unavailable for multiple overlapping Rule 10b5–1 trading arrangements for open market trades in the same class of securities. As an alternative, we could allow multiple plans but limit their number (*e.g.,* to two or three), limit the provisions to no more than one plan pertaining to purchases and one plan pertaining to sales, or provide other exceptions. These alternatives could preserve greater flexibility, compared to the proposal, and lower costs for plan participants that have multiple accounts through which they trade in the company stock. However, these alternatives would present a greater risk of illegal insider trading, compared to the proposal (to the extent not mitigated by other proposed provisions, including certifications, amended good faith requirement, cooling-off periods, and amended disclosure requirements). In particular, the option to maintain multiple plans concurrently facilitates

[174] *See supra* note 159 and accompanying and following text.

[175] *See supra* note 144 (discussing suggestions for three-month and four- to six-month cooling-off periods); see also supra note 120 and following text (noting that at over three-quarters of surveyed respondents, the cooling-off period was 60 days or less).

[176] *See supra* notes 118–120 and accompanying and preceding text and *supra* note 168.

the ability to selectively cancel one of the plans based on material nonpublic information, without being subject to a waiting period with respect to the remaining plans' trades. This alternative may be less significant to the extent that companies already disallow, or avoid, multiple overlapping plans voluntarily,[177] or to the extent that companies may allow, or have, a trading plan not reliant on Rule 10b5–1(c)(1) to exist in conjunction with a trading plan reliant on Rule 10b5–1(c)(1).[178]

The proposed amendments would also limit the availability of the affirmative defense in the case of single-trade Rule 10b5–1 plans to a maximum of one such plan in a 12-month period. As another alternative, we could restrict the use of single-trade plans under Rule 10b5–1(c)(1) entirely, or conversely, allow a greater number of single-trade plans in a 12-month period. The alternative of more (less) stringent restrictions on single-trade plans could reduce (increase) the risk of insider trading, compared to the proposal (to the extent not mitigated by the cooling-off period and other proposed provisions). Unlike in the case of a multi-trade plan, an insider who decides to initiate a single-trade Rule 10b5–1 plan based on MNPI is more likely to be able to execute it with less price impact and not to have to disclose the trade on Form 4 (and, depending on the timing of plan adoption and Form 10–Q/10–K filing, not to have to disclose the plan adoption) until after the plan is fully executed.[179] In turn, the alternatives of more (less) stringent restrictions on single-trade plans could also limit (expand) the flexibility and impose additional costs on insiders with a one-time, ad hoc liquidity need, compared to the proposal.[180]

6. Request for Comment

45. Would the proposed amendments to the conditions of Rule 10b5–1(c)(1) benefit investors? In what specific ways would the proposed amendments help protect investor interests?

46. What would be the costs of the proposed amendments to Rule 10b5–1(c)(1) for insiders, companies, and investors?

47. Would the proposed amendments affect the use of Rule 10b5–1 plans, and if so, how?

48. How often are Rule 10b5–1 plans used today for purchases and sales of securities? How often are Rule 10b5–1 plans used by natural persons other than officers (*e.g.,* directors, beneficial owners, non-executive employees)? How prevalent are concerns about insider trading under Rule 10b5–1 plans? Which traders raise the most significant concerns (*e.g.,* officers, directors, others)?

49. How often do companies impose cooling-off periods on Rule 10b5–1 plans today? What cooling-off period length is most common today? Would the proposed 120-day minimum cooling-off period for Rule 10b5–1 plans of officers and directors benefit investors? What would be the costs of the proposed cooling-off periods? Should we consider alternative cooling-off period lengths or definitions, and what would be their costs and benefits?

50. Are there other provisions we should consider instead of cooling-off periods, to more effectively address insider trading through Rule 10b5–1 plans, and what would be the economic effects of such alternative provisions?

51. What other practices and policies are used today to mitigate insider use of material nonpublic information for trading through trading plans?

52. What would be the economic effects of the proposed restriction on multiple overlapping Rule 10b5–1 plans? What would be the costs and benefits of the proposed limit on the number of single-trade Rule 10b5–1 plans in a 12-month period? Would these provisions appropriately balance concerns about the use of multiple overlapping plans and insiders' liquidity needs? Should we consider alternative restrictions, and what would be the benefits and cost of those alternatives?

53. Would the proposed director and officer certification requirements with respect to Rule 10b5–1 plans serve to protect investors and deter insider trading under such plans? What would be the costs of the proposed certification requirements? What challenges might insiders face in complying with the proposed requirements?

54. Would the amended good faith requirement of Rule 10b5–1(c)(1) serve to protect investors from insider trading through Rule 10b5–1 plans? What would be the costs of the amended good faith requirement?

55. How often do companies themselves rely on Rule 10b5–1 plans today to purchase securities and to sell securities, respectively? How often do companies that rely on Rule 10b5–1 plans disclose such plans? How prevalent are concerns about insider trading under Rule 10b5–1(c)(1) by companies?

56. Would applying the proposed 30-day cooling-off period, the proposed amendments to the good faith provision, and the proposed exclusion of multiple trading plans to companies benefit investors? What would be the costs of the proposed amendments for companies that rely on Rule 10b5–1 plans and their shareholders? What would be the economic effects of exempting companies from some of the proposed conditions, or modifying some of the proposed conditions in cases of companies' Rule 10b5–1 plans? For example, what would be the costs and benefits of exempting companies from the cooling-off period requirement, or applying a shorter or longer cooling-off period to companies' Rule 10b5–1 plans? How would issuer ability to rely on Rule 10b5–1(c)(2) change these economic effects?

C. Disclosure of Trading Arrangements in New Item 408 of Regulation S–K and Mandatory Rule 10b5–1 Checkbox in Amended Forms 4 and 5

The proposed new Item 408 of Regulation S–K would require quarterly disclosure, on Form 10–Q and Form 10–K (with respect to a company's fourth quarter), of the adoption or termination, and the terms of a Rule 10b5–1 trading arrangement or other preplanned trading arrangement by directors, Rule 16a–1(f) officers, and the company itself. Proposed Item 408 would also require disclosure in Form 10–K and proxy or information statements of policies and procedures governing trading by directors, officers, and employees and the issuer itself (as discussed in greater detail in Section II.B above). A similar requirement with respect to disclosure of policies and procedures would extend to foreign private issuers that file annual reports on Form 20–F.[181] The proposed disclosures would be tagged using a structured data language (specifically, Inline XBRL). In addition, the proposed amendments would add a Rule 10b5–1 checkbox as a mandatory disclosure requirement on Forms 4 and 5 to indicate that a reported transaction was made pursuant to a Rule 10b5–1 trading arrangement, and disclosure of the date of adoption of the trading plan. We are also proposing to add an optional checkbox to Forms 4 and 5 that would allow a filer to indicate whether a transaction reported on the form was made pursuant to a contract,

[177] *See supra* note 150 and accompanying text and *supra* note 168.

[178] *See supra* note 151 and accompanying text.

[179] *See supra* note 152.

[180] *See supra* note 166.

[181] The discussion in this section referring to Item 408(b) also extends to the economic effects of related amendments to Form 20–F that apply similar requirements to Form 20–F filers.

instruction, or written plan that did not satisfy the conditions of Rule 10b5–1(c).

1. Baseline and Affected Parties

The proposed Item 408(a) disclosure requirements regarding the adoption, modification, termination, and material terms of officer, director, and company trading plans would apply to annual and quarterly reports on Forms 10–K and 10–Q. During calendar year 2020, based on the analysis of EDGAR filings, we estimate that there were approximately 6,400 filers with annual reports on Form 10–K or quarterly reports on Form 10–Q or amendments to it.[182] The proposed Item 408(b) disclosure requirements regarding insider trading policies and procedures would apply to annual reports on Forms 10–K and proxy and information statements on Schedules 14A and 14C. Disclosure requirements similar to proposed Item 408(b) would also apply to foreign private issuers that file Form 20–F. During calendar year 2020, based on the analysis of EDGAR filings, we estimate that there were approximately 5,900 filers of annual reports on Form 10–K or proxy or information statements, or amendments to them, and, in addition, approximately 700 filers of annual reports on Form 20–F (or amendments to them).[183]

The proposed requirements regarding the disclosure of trading plans will affect all companies that have their own trading plans or whose officers or directors have trading plans, as well as, indirectly, all officers and directors with trading plans whose plans would now be subject to public disclosure by the company (see Section IV.B.1 above).

The proposed requirements regarding disclosure of insider trading policies and procedures would affect companies subject to the requirements, as well as indirectly, companies and natural persons that engage in trading subject to the disclosed policies and procedures.

The proposed Rule 10b5–1 checkbox requirement would apply to all filers of Forms 4 and 5 (not just officers and directors). During calendar year 2020, we estimate that there were approximately 44,000 such filers.[184]

2. Benefits

The proposed Item 408 of Regulation S–K and related disclosure amendments would benefit investors through greater transparency about officer, director, and issuer trading arrangements, as well as governance practices with respect to insider trading.[185] The timing of trading plan adoption and termination by officers, directors, or the company itself, as well as a description of the terms of the trading arrangement, would enhance the value of existing trade disclosures, potentially conveying valuable information about the insiders' or the company's views on the company's future outlook, aiding investors in obtaining a more accurate valuation of the company's shares and making more informed investment decisions.

The proposed requirement that these data points be tagged in a structured data language (specifically, in Inline XBRL) would facilitate access and analysis of the disclosures by investors, potentially leading to more useful and timely insights. In particular, structuring the disclosures about trading plans that would be required under Item 408(a) of Regulation S–K would enable automated extraction of granular data on such trading plans, which would allow investors to efficiently perform large-scale analyses and comparisons of trading plans across issuers and time periods. Structured data on trading plans could also be efficiently combined with other information that is available in a structured data language in corporate filings (*e.g.,* information on insider sales and purchases of securities) and with market data contained in external machine-readable databases (*e.g.,* information on daily share prices and trading volume). The use of a structured data language could also enable considerably faster analysis of the disclosed data by investors. For the narrative disclosure on policies and procedures that would be required under Item 408(b) of Regulation S–K, structuring the disclosures in Inline XBRL would allow investors to extract information from and search through the disclosures about trading plan policies and procedures (rather than having to manually run searches for these disclosures through entire documents), automatically compare these disclosures against prior periods, and perform targeted artificial intelligence and machine learning assessments (tonality, sentiment, risk words, etc.) of specific narrative disclosures about trading plan policies and procedures rather than the entire unstructured document.

We expect these benefits to result from disclosure of plan terminations and changes in material plan terms, as well as from disclosure of plan adoptions, because a termination, or a change in material terms, of a prior trading plan may similarly convey information about the views of the officers, directors, or the issuer regarding the company's future outlook and share price. Further, the timing of trading plan adoption or termination, relative to the issuance of other corporate disclosures, would provide investors with valuable insight into potential insider trading under such plans, and thus associated conflicts of interest that erode firm value. We expect such benefits to extend to all trading arrangements, including ones that are not reliant on Rule 10b5–1(c)(1), which also are within the scope of the proposed new Item 408 and related disclosure amendments. This would be particularly beneficial in instances where issuers, officers, or directors forgo reliance on Rule 10b5–1(c)(1) under the proposed amendments or fail to meet one of the proposed amended conditions of the affirmative defense. Moreover, by drawing market scrutiny to the adoption, termination, and changes in the terms of trading plans, enhanced trading plan disclosure is expected to deter insider abuses of trading arrangements based on MNPI. This would benefit investors by reducing insider trading, as well as reducing the economic costs and inefficiencies associated with insider trading, as discussed in Section IV.A above. The described benefits would be lowered or eliminated to the extent that trading plans are initiated due to liquidity needs or other reasons not related to the company's or insider's outlook on future share price.

The proposed additional disclosure of insider trading policies and procedures is expected to provide investors with valuable information about governance practices with respect to insider trading of company stock. This requirement will allow investors to better understand the policies and procedures that guide companies in which they invest and the conduct of officers and directors of those companies, including whether and how issuers adopt standards that are reasonably necessary to promote (i) honest and ethical conduct, including the handling of conflicts of interest, (ii) full, fair, and accurate disclosure in periodic reports, including the potential mitigation of pricing distortions from insider trading, and (iii) compliance with applicable government rules and regulations, including the prohibition on insider trading.[186] The absence or presence, and the nature of, such policies and practices can inform

[182] The estimate excludes registered investment companies and asset-backed securities issuers, which would not be subject to the proposed disclosures.

[183] Id.

[184] The estimate is based on filings of Forms 4 and 5 during calendar year 2020 in Thomson Reuters/Refinitiv insiders dataset.

[185] *See also* Section IV.A.

[186] *See* 15 U.S.C. 7264(c).

investors about the likelihood of insider use of MNPI and thus, the likelihood of incurring the economic costs of insider trading discussed in Section IV.A above. It will help investors better understand how issuers protect their confidential information—which ''qualifies as property to which the company has a right of exclusive of use''—as well as guard against the misappropriation of that information.[187] The disclosure of insider trading policies and procedures could also aid shareholders' voting decisions. Requiring the disclosure would also provide greater consistency in disclosures across companies. In addition, the anticipation of market scrutiny following mandatory disclosure may incentivize companies without specific insider trading policies to implement such policies and procedures. Such revisions to insider trading policies are in turn expected to reduce the likelihood of insider trading, and the associated economic costs discussed in Section IV.A above, particularly at companies with weaker governance practices with respect to insider trading.

The proposed amendments adding a Rule 10b5–1 plan checkbox to Forms 4 and 5 would benefit investors by providing transaction-specific disclosure of sales and purchases under Rule 10b5–1 plans. The proposed checkbox disclosure would allow investors easier and timelier access to information about trades under Rule 10b5–1(c)(1). This information would enable investors to more comprehensively identify insider trading pursuant to Rule 10b5–1 plans, as well as provide greater consistency in the disclosure of Rule 10b5–1 plan trades. Today, the disclosure of a purchase or sale under a Rule 10b5–1 trading arrangement in Forms 4 and 5 is voluntary, resulting in a lack of consistent and comprehensive information about trades. To the extent that trades under Rule 10b5–1(c)(1) are subject to a different regulatory framework and may have different motivations than other insider trades, the checkbox would allow investors to more readily interpret information in Forms 4 and 5.

The proposed mandatory Rule 10b5–1 plan checkbox disclosures, in combination with the proposed quarterly disclosure of adoption, modification, termination, and material terms of trading plans, would provide greater transparency to investors regarding the use of Rule 10b5–1 plans for trading. Such information about insider trading would provide investors with valuable context for interpreting other corporate disclosures in valuing the companies' shares and making informed investment decisions. Because Forms 4 and 5 would continue to use a structured data language, investors would be able to extract and analyze comprehensive information about insider trades under Rule 10b5–1 plans across multiple time periods, individuals, and companies.

3. Costs

First, we consider the direct (compliance-related) costs of the proposed disclosure requirements for insiders and companies. Such costs would include preparing the disclosure and gathering the information required to comply with the new disclosure requirements. Such costs would be lower for companies that already disclose some information about insider and issuer trading plans or insider trading policies today. Insiders are likely to have information about which of their trades were executed pursuant to a Rule 10b5–1 plan readily available, likely resulting only in small direct costs of providing a checkbox disclosure on Forms 4 and 5. The costs of complying with the new checkbox requirement would be lowest for officers and directors that already voluntarily disclose Rule 10b5–1 plan use in their filings of Forms 4 and 5.

Officers and directors will have information about the adoption, modification, termination, and terms of their trading plans readily available. Similarly, companies will have information about the adoption, modification, termination, and material terms of their own trading plans readily available. However, companies might not currently be collecting such information from officers and directors as part of their existing disclosure obligations, especially with respect to plans that do not rely on Rule 10b5–1(c)(1). In those cases, companies and officers and directors may have to expend additional effort to collect this information about the trading plans of directors and officers and prepare it for disclosure under proposed Item 408(a).

Companies will have information about their insider trading policies and procedures readily available. Identifying and preparing a disclosure of such policies (and for companies without a specific policy, the reasons for not having such a policy) is expected to result in some additional direct costs, however, such costs are likely to be relatively small.

The proposed requirement to tag the proposed disclosures in Inline XBRL will impose incremental compliance costs on issuers. Such costs are expected to be modest, because issuers affected by the proposed Inline XBRL requirements (including small filers) are already required (or, in the case of business development companies, would be required no later than February 2023) to use Inline XBRL to comply with other disclosure obligations.[188] Moreover, the scope of the disclosure proposed to be reported using a structured data language is limited and would thus likely require a relatively narrow in scope taxonomy of additional tags (compared to the significantly more extensive taxonomies used for financial statement disclosure tagging requirements), thus limiting the initial and ongoing costs of complying with the proposed tagging requirement.

Next, we discuss the indirect costs that the proposed Item 408 and related disclosure amendments could impose on insiders and companies. Indirect costs could include potential reputational and investor relations costs associated with the disclosure. For example, companies that have not implemented specific insider trading policies and procedures, as well as companies at which the adoption, modification, or termination of trading plans appear to correlate to the release of MNPI, may experience reputational and legal costs and a weakening of investor confidence in their corporate governance after public disclosure of this information. To the extent that the proposed amendments to Rule 10b5–1(c)(1) eliminate or deter insider trading based on MNPI under Rule 10b5–1 trading arrangements, these legal and reputational costs of public disclosure should be minimal for such plans. Relatedly, officers and directors that adopt, modify, or terminate trading plans around the release of MNPI may also suffer reputational or legal costs from the public disclosure of this information.

In the case of issuers conducting repurchases, the quarterly disclosure of trading plans could in some circumstances result in another type of indirect cost—the cost of potential partial revelation of the issuer's future repurchase plans (including potential timing and scale of future trades) to other market participants, which may be further exacerbated if we were to adopt

[187] *O'Hagan,* 521 U.S. at 654 (recognizing that the undisclosed misappropriation of MNPI in breach of a duty of trust and confidence is ''akin to embezzlement'').

[188] *See Inline XBRL Filing of Tagged Data,* Release No. 33–10514 (June 28, 2018) [83 FR 40846, 40847 (Aug. 16, 2018)]; *Securities Offering Reform for Closed-End Investment Companies,* Release No. 33–10771 (Apr. 8, 2020) [85 FR 33290 at 33318 (Jun. 1, 2020)].

the daily disclosure requirement for share repurchases that we are proposing in a separate release.[189] Issuers that continue to rely on Rule 10b5–1(c)(1) to conduct repurchases might be able to mitigate such costs by structuring their repurchases under a Rule 10b5–1 plan to have a less predictable pattern of trades.[190]

Finally, some companies may implement new insider trading policies, or update existing insider trading policies, in anticipation of the proposed disclosure requirement regarding policies and procedures and the ensuing public scrutiny of disclosed policies and procedures. Additional restrictions on insider trading arrangements adopted in anticipation of the public disclosure could result in economic costs for insiders and in some instances, offsetting changes in insider compensation and insider efforts to reduce their equity exposure in light of the trading restrictions (broadly in line with the discussion of the potential indirect costs of restrictions on insider use of trading arrangements in Section IV.B.3 above). Costs incurred by companies would be borne by their existing shareholders.

4. Effects on Efficiency, Competition, and Capital Formation

We expect the proposed amendments to reduce the information asymmetry between insiders and outside investors by providing more granular and timelier detail about officers', directors', and companies' trading plans and associated policies. The reduction in information asymmetry as a result of the additional disclosure would result in more informationally efficient stock prices. Because disclosure of insider and issuer trading plans and insider trading policies can inform investors about insider incentives and governance practices, which could affect shareholder value as discussed in Section IV.A above, the proposed additional disclosure about insider and issuer trading arrangements and insider trading policies could also better inform investment decisions (enabling more efficient allocation of capital in investor portfolios) and shareholder voting decisions.

Importantly, we expect the proposed amendments to draw market scrutiny to officers', directors', and companies' use of Rule 10b5–1(c)(1) or other trading arrangements, decreasing the ability of insiders and companies to trade on MNPI through such trading arrangements. As discussed in Section IV.B.4 above, this should reduce insiders' incentive conflicts associated with insider trading. In particular, it would decrease incentives for inefficient corporate investment decisions and other corporate decisions. Further, it would decrease insiders' incentives to influence corporate disclosures, resulting in timelier and higher-quality disclosures (that enable more informationally efficient share prices and more efficient allocation of capital in investor portfolios).

A lower risk of trading against an informed insider is expected to increase investor confidence and the willingness of market participants to buy, and trade in, the company's shares. This would indirectly make it easier for the company to raise capital from investors. Companies that disclose robust insider trading policies in particular may elicit greater investor confidence, as well as interest from investors seeking companies with stronger corporate governance practices, resulting in capital formation benefits for such companies.

Finally, in line with the discussion in Section IV.B.4 above, the proposed amendments may affect competition. Decreasing the ability of insiders and companies to trade on MNPI would weaken their competitive edge in trading, promoting competition among other investors in the market for the company's shares. As discussed above, a lower risk of an insider with a significant private information advantage trading the company's shares would strengthen the incentive of other market participants to trade the company's shares and compete in gathering and processing information about the company.

To the extent that the proposed disclosure requirements impose a fixed cost on companies, they would have a negative competitive effect on smaller issuers subject to the amendments, as well as on issuers that do not already disclose insider trading policies and trading arrangements. The proposed Item 408(a) disclosure requirements would not apply to foreign private issuers, potentially placing them at a relative competitive advantage to domestic filers.[191] With that exception, because the proposed disclosure amendments would apply broadly across domestic public companies, generally, we do not anticipate it to result in meaningful competitive disparities in the labor market for executive talent.[192]

All of the effects described above would be smaller to the extent that companies already disclose insider trading policies and trading arrangements today.

5. Reasonable Alternatives

The proposed amendments would require quarterly disclosure of adoption, modification, termination, and a description of the terms of the trading arrangement of directors, Rule 16a–1(f) officers, and companies, as well as disclosure of insider trading policies and procedures in annual reports and proxy and information statements. As an alternative, we could modify the scope and granularity of the proposed disclosure of trading plans and/or of insider trading policies and procedures. The alternatives of expanding or narrowing the scope of the proposed disclosures could potentially provide greater or lesser detail to investors, enabling better or less informed investment decisions and more or less accurate assessment of the risk of the use of MNPI for informed trading through trading plans, compared to the proposal. However, the alternative of expanding or narrowing the scope of the proposed disclosure could also increase or decrease disclosure costs (discussed in greater detail in Section IV.C.3 above).

As another alternative to the proposed quarterly disclosure of adoption, termination, and the terms of trading arrangements, we could require more or less frequent disclosure. Requiring more or less frequent disclosure under Item 408(a) would provide timelier (or less timely) information to investors about trading arrangements but also impose

[189] *See Share Repurchase Disclosure Modernization,* Release No. 34–93783 (Dec. 15, 2021).

[190] This approach of less predictable issuer purchases (such as an algorithm-based plan or another plan other than a series of equally-spaced, similar-sized trades) may emerge organically in cases where the front-running costs are likely to be highest, for example, when an issuer's management is repurchasing shares based on the belief that the company is undervalued. In other cases, for example, when issuer share purchases are intended to incrementally adjust capital structure or pay out excess cash, rather than reflect a belief about significant undervaluation, an issuer may opt for a mechanical rule with equally spaced, similar-sized trades. While such a trade pattern is more predictable to market participants, it may also be more likely to be chosen in instances of repurchases for which concerns about front-running the issuer's information may be relatively less significant.

[191] Foreign private issuers that file annual reports on Form 20–F would be subject to requirements similar to Item 408(b), as proposed. Further, foreign private issuers listed on U.S. exchanges would remain subject to insider trading laws and exchange listing standards.

[192] We do not expect significant effects on the labor market competition for executive talent between public and private companies. While the proposed disclosures would increase costs for public companies and, indirectly, their officers and directors, these amendments are likely to have only a marginal effect on the overall tradeoff of being an officer or director at a public company (including the liability risk and costs of public scrutiny of the insider's holdings, trades, and other actions).

higher (or lower) costs on companies and insiders. A more detailed discussion of the benefits and costs of the Item 408(a) disclosure is included in Sections IV.C.2 and IV.C.3 above.

As another alternative to the proposed quarterly disclosure, we could narrow its scope to Rule 10b5–1 plans. Under this alternative, issuers and officers and directors with trading arrangements not reliant on Rule 10b5–1(c)(1) would not incur costs of the amendments. However, investors would receive less information about insider trading arrangements, compared to the proposal. This effect on investors would be more pronounced if some issuers or insiders switch from Rule 10b5–1 plans to other trading arrangements.

The proposed amendments would require the quarterly disclosures regarding trading arrangements and the annual disclosures regarding policies and procedures to be tagged using a structured data language (specifically, Inline XBRL). Alternatively, we could change the scope of the tagging requirement, such as by narrowing the requirement to cover only quarterly disclosures required under proposed Item 408(a). This alternative would provide incremental compliance cost savings for filers, who would not be required to select, apply, and review Inline XBRL tags for the annual report and proxy and information statement disclosures regarding insider trading policies and procedures, although such cost savings would likely be low given the limited number of Inline XBRL tags that are expected to be needed to tag the proposed disclosures. This alternative would also remove the informational benefits to investors that would accrue from facilitating retrieval of issuers' policies and procedures disclosures and comparing such disclosures across issuers and time periods, compared to the proposal.

As proposed, the disclosure requirement regarding trading arrangements would only apply to domestic filers. The disclosure requirement regarding insider trading policies and procedures would apply to domestic filers and to Form 20–F filers. As an alternative, we could exempt Form 20–F filers from the policies and procedures disclosure requirement. As another alternative, we could extend the disclosure requirement regarding trading arrangements to Form 20–F filers. Generally speaking, exempting Form 20–F filers from the scope of the proposed disclosure requirements would prevent such foreign private issuers from incurring the direct and indirect costs of the rule (as described in detail in Section IV.C.3 above). Exempting Form 20–F filers also would decrease the amount of information available to investors about the insider trading incentives and policies at such issuers, potentially limiting investor ability to make informed decisions with respect to such issuers. Exempting Form 20–F filers also could lead to incrementally greater competitive disparities due to the higher compliance burden of domestic issuers with respect to this requirement. Because foreign private issuers that file annual reports on Form 20–F do not have a quarterly reporting obligation equivalent to a Form 10–Q, the incremental benefit of the alternative of extending requirements similar to Item 408(a) to Form 20–F filers could be relatively more modest (due to the less timely disclosure of information on trading arrangements, if it were required to be disclosed in annual reports).

The proposed amendments to Forms 4 and 5 (a mandatory Rule 10b5–1 checkbox and the date of plan adoption) would require disclosure only with respect to Rule 10b5–1 trading arrangements. The date of trading plan adoption and the fact that the trade is conducted under a trading plan would not be required to be disclosed for plans that do not rely on Rule 10b5–1(c)(1) but could be disclosed voluntarily at the option of the filer. As an alternative, we could require disclosure of reliance on a non-Rule 10b5–1 plan and the date of adoption of such a plan. This alternative could provide investors with more comprehensive information about insider trades under trading arrangements. Combined with the proposed Item 408 disclosures about officer and director trading arrangements (including ones not reliant on Rule 10b5–1), it also could enable greater transparency into whether insider trading is occurring under other trading plans, and potentially deter such trading. To the extent that trading arrangements that do not use Rule 10b5–1 can take a wide variety of forms, requiring trades under such trading arrangements to be identified on Forms 4 and 5 separately from other insider trades conducted without a trading arrangement would likely be less meaningful to investors.

6. Request for Comment

57. What are the economic effects of the proposed Item 408 disclosures? Would the proposed disclosures benefit investors, such as by providing additional information to investors or by limiting potential use of MNPI for trading through trading plans?

58. What would be the costs of the proposed Item 408 disclosures?

59. What are the economic effects of applying the proposed Item 408 disclosure requirements regarding plan adoption, modification, termination, and material terms to all trading plans (including both ones that rely and ones that do not rely on Rule 10b–1), as proposed?

60. What are the benefits and costs of the proposed quarterly disclosure regarding plan adoption, modification, termination, and material terms? What are the benefits and costs of alternative reporting requirements or frequencies?

61. What are the economic effects of the proposed Item 408 requirement to disclose the issuer's insider trading policies and procedures governing the purchase, sale, and other dispositions of the registrant's securities on Form 10–K or proxy or information statement? What are the economic effects of extending similar requirements to filers of annual reports on Form 20–F, as proposed?

62. Would the proposed requirement to structure Item 408 disclosures in Inline XBRL benefit investors? What would be the costs of such a requirement for filers? How would the costs and benefits vary if we were to narrow the scope of structured data requirements, for example to include only the quarterly disclosures that would be required under proposed Item 408(a) of Regulation S–K?

63. How often do officers and directors rely on Rule 10b5–1 plans today but elect not to disclose such reliance on beneficial ownership forms (Forms 4 and 5)?

64. Would investors benefit from the proposed requirement to disclose the use of a Rule 10b5–1 plan on Forms 4 and 5?

65. What would be the costs of the proposed requirement to disclose the use of a Rule 10b5–1 plan on Forms 4 and 5?

66. What alternative disclosure requirements related to insider trading arrangements should we consider, and what would be the benefits and costs of such alternatives?

D. Additional Disclosure of the Timing of Option Grants and Related Company Policies and Practices (Amendments to Item 402 of Regulation S–K)

The Commission is proposing to amend Item 402 of Regulation S–K to enhance the transparency regarding companies' grants of stock options, SARs, or similar instruments before or after the filing of a periodic report, or the filing or furnishing of a current report on Form 8–K that contains MNPI.

1. Baseline and Affected Parties

The proposed amendments to Item 402 disclosure requirements would apply to filers of annual reports on Form 10–K and proxy and information statements.[193] During calendar year 2020, we estimate that there were approximately 5,900 affected filers.

Existing Item 402 requires disclosure of option grant dates thus potentially enabling investors today to compare the timing of grant dates and historical filings of a periodic report or another EDGAR filing that contains MNPI. The Commission provided interpretive guidance regarding option grants in the 2006 executive compensation disclosure release.[194] In considering the timing of option grants in coordination with the release of MNPI, the Commission explained in the release that if the company has such a program, plan, or practice, the company should disclose that the board of directors or compensation committee may grant options at times when the board or committee is aware of MNPI.[195] To the extent that the existing disclosures of companies that allow the timing of option grants around MNPI reflect such guidance, the incremental effects of a mandate to disclose policies and procedures related to option grants around MNPI would be relatively smaller.

Some studies have noted that the regulatory reforms of the early and mid-2000s have led to the decline, if not disappearance, of questionable option timing practices.[196] However, there is some evidence that option spring-loading and bullet-dodging persists.[197] For example, one study, which examined 4,852 scheduled CEO stock option grants from 2007 through 2011, finds that ''managers accelerate bad news before a grant (bullet dodging) and delay good news until after a grant (spring loading) . . . market reactions to SEC Form 8–K filings (which report material corporate events) tend to be negative in the months immediately before a scheduled CEO option grant and positive in the months after the grant. Executives also appear to move earnings from the pre-grant period to the post-grant period, for example, by changing a firm's accounting choices (*e.g.,* accruals management) and perhaps even by timing investments (*e.g.,* real earnings management).'' [198] Another study finds that spring-loading partly replaced the disappearing practice of option backdating.[199] A different study documents spring-loading around stock splits but does not disaggregate the 1992–2012 period into pre- and post-2006 sub-periods.[200]

2. Benefits

As discussed in Section II above, certain practices related to the timing of executive compensation option grants raise concerns about the use of MNPI. Improved disclosure would potentially mitigate the economic costs of the associated incentive distortions as these practices would have greater visibility to investors and inform their investment and voting decisions.

Spring-loading and bullet-dodging potentially increase the value of the options granted to the executive, upon MNPI becoming public.[201] Holding the number of the granted options and the policy to grant options with the strike price equal to the current observable market price (''at-the-money'') constant, this leads to the executive effectively receiving a higher compensation award than if the timing of option grants were completely independent of MNPI releases.[202] Regardless of any potential impact of the expected public release of MNPI on compensation cost recognized for the option awards, strategic timing of option awards around MNPI releases increases the value of the compensation award.[203] Further, lowering an option's strike price through timing of an option award around MNPI release affects the sensitivity of the awarded options to changes in the company's share price.[204] Some have argued that these practices may be the result of an optimal compensation policy.[205] Whether such

[193] Current filing requirements of Form 10–K permit filers to incorporate by reference executive compensation disclosures from a proxy or information statement involving the election of directors. *See supra* note 78. These estimates exclude registered investment companies and asset-backed securities issuers, which would not be subject to the proposed requirements.

[194] *See* Executive Compensation and Related Person Disclosure, *supra* note 65.

[195] *Id.*

[196] Randall Heron and Erik Lie, What Fraction of Stock Option Grants to Top Executives Have Been Backdated or Manipulated?, 55(4) *Management Science* 513–525 (2009); M.P. Narayanan and H. Nejat Seyhun, The Dating Game: Do Managers Designate Option Grant Dates to Increase Their Compensation? 21(5) *Review of Financial Studies,* 1907–1945 (2008); Lucian Bebchuk, Yaniv Grinstein, and Urs Peyer, Lucky CEOs and Lucky Directors, 65(6) *Journal of Finance,* 2363–2401 (2010); Linxiao Liu, Harrison Liu, and Jennifer Yin, Stock Option Schedules and Managerial Opportunism, 41(5–6) *Journal of Business Finance and Accounting,* 652–684 (2014); Rik Sen, The Returns to Spring-Loading, *New York University* (Working Paper) (2008).

[197] *See also* ''Insider Trading and Stock Option Grants: An Examination of Corporate Integrity in the Covid-19 Pandemic,'' Memorandum from FSC Majority Staff to Members, Committee on Financial Services, September 17, 2020, *available at https://financialservices.house.gov/uploadedfiles/hhrg-116-ba16-20200917-sd002.pdf,* at pp. 2–5.

[198] *See* Robert M. Daines, Grant R. McQueen, and Robert J. Schonlau, Right on Schedule: CEO Option Grants and Opportunism, 53(3) *Journal of Financial and Quantitative Analysis,* 1025–1058 (2018) (finding that: ''some CEOs have manipulated stock prices to increase option compensation, documenting negative abnormal returns before scheduled option grants and positive abnormal returns afterward;'' ''document[s] several mechanisms used to lower stock price, including changing the substance and timing of disclosures;'' and further contends that such opportunism ''distorts stock prices, leading to capital misallocation, and may dissipate firm value if executives postpone valuable projects.'' *See also* David Aboody and Ron Kasznik, CEO Stock Option Awards and the Timing of Corporate Voluntary Disclosures, 29(1) *Journal of Accounting and Economics,* 73–100 (2000) (focusing on CEO option awards with fixed award schedules and showing that ''CEOs make opportunistic voluntary disclosure decisions that maximize their stock option compensation,'' based on changes in share prices, analyst earnings forecasts, and management earnings forecasts); Keith W. Chauvin, and Catherine Shenoy, Stock Price Decreases Prior to Executive Stock Option Grants, 7(1) *Journal of Corporate Finance,* 53–76 (2001) (finding, in a May 1991 to February 1994 sample covering 313 CEOs, ''a statistically significant abnormal decrease in stock prices during the 10-day period immediately preceding the grant date'' and concluding that ''[e]xecutives who expect to be granted stock options have the incentive, opportunity and ability to affect the exercise price with their inside information'').

[199] *See* Giulian Bianchi, Stock Options: From Backdating to Spring Loading, 59 *Quarterly Review of Economics and Finance,* 215–221 (2016) (examining data through 2011).

[200] *See* Erik Devos, William Elliott, and Richard Warr, CEO Opportunism? Option Grants and Stock Trades around Stock Splits, 60(1) *Journal of Accounting and Economics,* 18–35 (2015).

[201] Past studies have focused primarily on options. In this context, the same economic effects can be expected in the case of awards of SARs and similar instruments. For purposes of this analysis, the term ''option'' includes stock options, SARs and similar instruments with option-like features.

[202] *See* David Yermack, Good Timing: CEO Stock Option Awards and Company News Announcements, 52(2) *Journal of Finance,* 449–476 (1997). *See also* Iman Anabtwai, Secret Compensation, 82(3) *North Carolina Law Review,* 835–890 (2004).

[204] Spring-loading can cause a call to be in-the-money when it would have otherwise been at-the-money, assuming favorable MNPI is about to be released. Everything else equal, the value of an in-the-money call would have a higher sensitivity to the share price than the value of an at-the-money call. Bullet-dodging can cause a call to be at-the-money when it would have otherwise been out-of-the-money, assuming negative MNPI is about to be released. Generally speaking, the value of an at-the-money call would have a higher sensitivity to the share price than the value of an out-of-the-money call. The effects of such changes would depend on the objectives of the overall compensation package with respect to inducing optimal executive incentives and the role of option and SAR awards in this package.

[205] *See, e.g.,* Erik Devos, William Elliott, and Richard Warr, CEO Opportunism? Option Grants and Stock Trades around Stock Splits, 60(1) *Journal of Accounting and Economics,* 18–35 (2015) (stating that ''it is not clear whether shareholders are necessarily harmed by this apparent option grant timing, as it is possible that this is just another way by which the [board of directors] attempts to reward and retain a high performing CEO''). *See also* Speech by SEC Commissioner: Remarks Before the International Corporate Governance Network 11th

Continued

practices constitute an optimal compensation policy or not, a lack of transparency about such compensation awards may limit investor ability to fully gauge the key terms of compensation arrangements and their implications for executives' incentives, and thus, firm value.

The Commission is proposing to amend Item 402 of Regulation S–K to require additional disclosure of option granting practices that would provide a more comprehensive picture of whether the company uses MNPI to time option awards. The proposed disclosure would present in a more readily available way information about option grants around MNPI releases, if any, as well as provide new disclosure of policies and procedures related to option grant timing with respect to MNPI. The proposed amendments would reduce information asymmetries between companies and investors with respect to the timing of compensation awards and applicable corporate policies and better inform investors about executives' incentives to maximize shareholder value and the company's executive compensation policies (the information that can then be compared with the executive's on-the-job performance in assessing the optimality of executive compensation). Besides contributing to better informed investment decisions, the proposed disclosure may inform shareholder say-on-pay votes and votes in director elections.[206]

Another potential benefit of the proposed disclosure is that, to the extent option grants around MNPI releases were not the result of a value-maximizing compensation policy but rather an outcome of agency conflicts (such as executives' attempts to extract additional compensation without drawing investor scrutiny to the full amount of such compensation),[207] and to the extent companies forgo such grants in anticipation of the proposed additional disclosure, the proposed disclosure requirement would improve shareholder value. The benefit would be lower if the extra compensation is currently optimally awarded.[208]

Further, to the extent that the practice of option grants around MNPI in some instances contributed to incentives of executives to change the timing and content of MNPI disclosures around option grant dates in an attempt to increase the economic value of compensation awards,[209] the proposed amendments could partly mitigate such incentives if they contribute to a decrease in such option grant practices. In those instances, the indirect effect of the proposed amendments could result in an improvement in the information content, timeliness, and quality of disclosures, and more efficient share prices and better informed investment decisions.

The described benefits of the proposed tabular disclosure would be limited by the fact that investors today can research and assess, based on historical option grant dates required to be disclosed under Item 402, how grant timing relates to EDGAR filings containing MNPI and share price changes around such filings (information that is publicly accessible, albeit not in one location). However, the proposed disclosure would aggregate this information in a more readily available and more salient tabular format in one location, potentially incrementally lowering investor search costs and increasing investor awareness of option grant timing around MNPI.

These benefits could also be modest if investors find the proposed disclosure to be of limited use (for example, if the tabular disclosure is too extensive and/or difficult to parse for companies with multiple MNPI filings and option grants for different executives, or because other factors may affect the share price notwithstanding the disclosure of MNPI).

The proposed amendments would require the additional quantitative disclosure to be submitted in Inline XBRL. This proposed requirement is expected to benefit investors by facilitating automated extraction of the disclosure information for purposes of aggregation, analysis, and comparison (across time periods and filers), potentially enabling more informed investment and voting decisions.

The proposed annual disclosure of policies and practices related to option grant timing around MNPI would offer new information that is not presently available to investors. The disclosure of the presence or absence of such policies and practices could inform investment and shareholder voting decisions, with the caveat that such disclosure may be of lower utility if it uses a ''boilerplate'' format. The anticipation of public disclosure may also lead companies to adopt policies and practices disallowing option grants around MNPI, leading to the benefits discussed above.

In general, the discussed benefits of the proposed amendments would be modest at companies that rely less on stock options and primarily or exclusively grant restricted stock, or do not grant equity-linked compensation.[210] At companies that use

Annual Conference by Commissioner Paul S. Atkins, U.S. Securities and Exchange Commission, July 6, 2006, *available at https://www.sec.gov/news/speech/2006/spch070606psa.htm.*

[206] *See, e.g.,* 2020 Proxy Paper Guidelines: An Overview of the Glass Lewis Approach to Proxy Advice—United States, *available at https://www.glasslewis.com/wp-content/uploads/2016/11/Guidelines_US.pdf,* at 12–13, 41–42 (stating that ''that ''[w]hen a company has engaged in spring-loading or bullet-dodging, Glass Lewis will consider recommending voting against the compensation committee members where there has been a pattern of granting options at or near historic lows.'' Furthermore, ''it will also recommend voting against executives serving on the board who benefited from the spring-loading or bullet-dodging.'' Spring-loading has also been the subject of shareholder suits alleging breach of fiduciary duty. *See, e.g., Howland* v. *Kumar,* C.A. No. 2018–0804, 2019 WL 2479738, at 1 (Del. Ch. June 13, 2019), *available at https://courts.delaware.gov/Opinions/Download.aspx?id=290950;* Verified Stockholder Derivative Complaint 3–5, *Knight* v. *Miller,* C.A. No.2021–0581, 2021 WL 3018402 (Del. Ch. filed July 9, 2021). *See also, e.g.,* Iman Anabtwai, Secret Compensation, 82(3) *North Carolina Law Review* 835–890 (2004) (stating that ''under state law fiduciary duty principles, a manager who receives stock options while in possession of inside information that will raise the stock price when it is later released discharges her fiduciary duty of loyalty through full disclosure to and ratification by a disinterested board. It is then the board's responsibility, pursuant to its fiduciary duty of disclosure, to inform the corporation's shareholders of the favorable timing of the grant, if it disseminates to them information about the company's executive compensation arrangements''); Matthew E. Orso, 'Spring-Loading' Executive Stock Options: An Abuse in Need of a Federal Remedy, 53(2) *Saint Louis University Law Journal* 629–662 (2009); Jonathan Tompkins, Opportunity Knocks, But the SEC Answers: Examining the Manipulation of Stock Options Through the Spring-Loading of Grants and Rule 10b-5, 26 *Washington University Journal of Law and Policy,* 413–458 (2008).

[207] One article notes that ''[t]here are, of course, constraints that check the extent to which the level and structure of executive compensation can deviate from what would be optimal for shareholders. . . To circumvent such pressures, managers will want to enhance their compensation as discreetly as possible. By 'camouflaging' elements of their pay, managers can maximize their compensation while minimizing adverse reaction. Timing option grants is an especially attractive way to enhance executive compensation both because it is difficult to detect and because it has generally eluded attention.'' *See* Iman Anabtwai, Secret Compensation, 82(3) *North Carolina Law Review,* 835–890 (2004). *See also, e.g.,* Giuliano Bianchi, Stock Options: From Backdating to Spring Loading, 59 *Quarterly Review of Economics and Finance,* 215–221 (2016) (stating that ''[o]pportunistic option timing is found to be associated with weaker corporate governance. Indeed, practices such as backdating and spring loading raise governance concerns . . . Eventually, the opportunistic option timing casts doubt on the efficacy of incentives to address the principal agent models.'').

[208] *See, e.g.,* Jonathan J. Tompkins, Opportunity Knocks, but the SEC Answers: Examining the Manipulation of Stock Options through the Spring-Loading of Grants and Rule 10b-5, 26 *Washington University Journal of Law and Policy,* 413–458, 444–445, 447 (2008).

[209] *See supra* note 198 and accompanying and following text.

[210] The proportion of companies that grant options to executives has declined substantially after the introduction of FAS 123R in 2004 (now codified in Accounting Standards Codification Topic 718). *See, e.g.,* Prevalence of Options Decreases as Companies Tie Awards to

stock options extensively as part of executive compensation, the effects of the proposed amendments might be more modest if other factors serve to deter spring-loading and bullet-dodging (for example, best practices implemented by the compensation committee or generally robust internal corporate governance mechanisms). The effects of the proposed amendments on executives might be smaller if companies adjust compensation to offset the decline in spring-loading and bullet-dodging under the amendments (*e.g.,* by changing option terms, the allocation of compensation between cash, options, and restricted stock, or the overall amount of compensation).

3. Costs

The proposed amendments to Item 402 requiring additional disclosure of the timing of option awards and related corporate policies would result in direct compliance-related costs for affected filers of compiling the information required in amended Item 402 for inclusion in the annual report or proxy statement. Because companies either already provide such information for other disclosures (option grant information and dates) or can readily obtain the information (daily share prices and dates of EDGAR filings), the direct costs are expected to be modest. Companies also would incur minor costs of aggregating such existing information into the proposed tabular format. Further, companies would incur some compliance-related costs to assess which of the filings from the reporting period contained MNPI and thus would be subject to the scope of the proposed tabular disclosure. Finally, while companies are likely to have information readily available about policies and practices related to option grant timing, they would likely incur some compliance-related costs to prepare that information for public disclosure.

Companies would incur compliance costs of structuring the proposed quantitative tabular disclosure in Inline XBRL. Such costs would be higher for filers with more option grants subject to the new disclosure. However, because the vast majority of filers subject to the proposed amendments already are subject to other structured disclosure requirements (*e.g.,* Inline XBRL requirements for financial statement information and cover page information in certain filings), the incremental cost of submitting the proposed compensation disclosure in a structured data language would likely be relatively modest.

The proposed amendments are also expected to result in indirect costs for companies and executives. Disclosure of spring-loading or bullet-dodging practices could result in reputational harms for companies or individual executives, including unfavorable say-on-pay votes. Outside scrutiny in response to the proposed disclosure could cause companies to forgo spring-loading and bullet-dodging. For companies at which such practices arose from efforts to implement an economically optimal compensation policy,[211] deviating from such a policy could result in less optimal compensation. However, companies may be able to use other, readily available means to adjust compensation terms to achieve a similar outcome.[212] At companies that forgo spring-loading and bullet-dodging but do not change other compensation terms to offset it, executives could experience effectively smaller, riskier compensation awards.

As discussed in Section IV.D.2 above, the indirect costs of the proposed tabular disclosure are likely to be modest relative to the baseline of existing option disclosures.

The proposed disclosure of policies and practices related to option grant timing around MNPI would offer new public disclosure not presently available to investors. Companies that lack such policies and practices may incur reputational costs of such disclosure. The anticipation of public disclosure may lead such companies to adopt policies and practices disallowing option grants around MNPI. This may impose costs on executives, to the extent other compensation terms are not adjusted in an offsetting manner, as described above.

As discussed in Section IV.D.2 above, the effects of the proposed amendments would be modest at companies without, or with limited, option compensation.

4. Effects on Efficiency, Competition, and Capital Formation

We expect the proposed amendments to Item 402 to incrementally decrease the information asymmetry between insiders and investors about the company's option compensation awards and associated policies, resulting in better information about the insiders' incentives related to such option awards. This would result in more informationally efficient prices and more efficient allocation of capital in investor portfolios. Greater availability of information about option compensation awards would also reduce shareholders' information gathering costs and enable them to make more efficient voting decisions in say-on-pay and director election votes.

Importantly, we expect the proposed amendments to draw market scrutiny to companies' use of MNPI in option awards, potentially decreasing the incidence of option award timing around MNPI. This would tend to reduce insiders' incentives to game corporate disclosures, which may result in timelier and higher-quality disclosures (that enable more informationally efficient share prices and more efficient allocation of capital in investor portfolios).

To the extent that the proposed Item 402 requirements impose a fixed cost on companies, they would have a negative competitive effect on smaller issuers subject to the amendments, as well as on issuers that do not already disclose policies and practices related to option award timing. The proposed disclosure requirements would not apply to foreign private issuers, placing them at a relative competitive advantage to domestic filers.

Because the proposed disclosure amendments would apply broadly across public companies, generally, we do not anticipate them to result in meaningful competitive disparities in the labor market for executive talent.[213]

The described effects would be attenuated to the extent investors already can infer whether companies time option awards around MNPI based on existing disclosures of option grant dates and other public information. The described effects would also be attenuated to the extent companies that

Performance, August 23, 2018, Equilar, *available at https://www.equilar.com/press-releases/103-prevalence-of-options-decreases-as-companies-tie-awards-to-performance;* Aubrey Bout, Brian Wilby, and Perla Cruz, S&P 500 CEO Compensation Increase Trends, *Harvard Law School Forum on Corporate Governance,* (February 11, 2020), *available at https://corpgov.law.harvard.edu/2020/02/11/sp-500-ceo-compensation-increase-trends-3/.* Based on the analysis of Execucomp data for fiscal year 2020 (retrieved on September 14, 2021), approximately 32 percent of companies reported option grants. Execucomp data covers S&P 1500 companies and thus may not be representative of option compensation at smaller companies. Registrants other than small business issuers and small business issuers, respectively, were required to comply with FAS 123R beginning with the first reporting period of the first fiscal year beginning on or after June 15, 2005 and December 15, 2005, respectively. *See Amendment to Rule 4–01(a) of Regulation S–X Regarding the Compliance Date for Statement of Financial Accounting Standards No. 123 (Revised 2004), Share-Based Payment,* Release No. 33–8568 (Apr. 15, 2005) [70 FR 20717 (Apr. 21, 2005)].

[211] *See supra* note 208.

[212] Companies could lower the strike price, increase the number of options granted, decrease the proportion of options in overall pay, increase overall pay, modify performance-based or other compensation terms, or some combination of those.

[213] *See supra* note 192.

award options around MNPI already disclose such policies and practices as a result of the 2006 interpretive guidance.

5. Reasonable Alternatives

The proposed amendments to Item 402 involve both a new table with information on individual option grants and the requirement to disclose policies and practices regarding the timing of option awards around the disclosure of MNPI. As an alternative, we could propose only one of those requirements, which could reduce the costs of disclosure for filers discussed in Section IV.D.3 above. However, omitting one of the proposed disclosure requirements would provide investors with less information about option compensation practices, resulting in potentially less informed investment and voting decisions. For example, omitting the tabular disclosure requirement could marginally reduce the salience of information about the actual timing of option grants around MNPI releases and the effects of such timing on the value of granted options in cases where a company discloses that it does not have policies restricting option awards around MNPI releases. In turn, omitting the requirement to disclose the company's practices and policies regarding the timing of option awards would reduce the amount of information about potential future compensation practices, compared to the proposal. Nevertheless, there is likely to be some substitution between the information benefits of the two proposed requirements, particularly in combination with the existing requirements to disclose grant dates.

The proposed amendments to Item 402 would require tabular disclosure of awards made within 14 days before or after the filing of a periodic report, or the filing or furnishing of Form 8–K that discloses MNPI. A typical company issues multiple filings with MNPI in a given year. Thus, it is likely that a typical company would include multiple option and SAR awards in the new tabular disclosure.[214] As an alternative, we could use a shorter or longer time period around filings with MNPI during which option awards would be subject to the additional tabular disclosure (for example, one day, one week, or thirty days). A shorter (longer) time period could result in less (more) disclosure and thus incrementally lower (higher) disclosure costs for filers, compared to the proposal. Because prices may change for reasons other than the release of MNPI when a longer time period is used, pre- and post-filing prices might be more informative for assessing the effects of the MNPI release on the valuation of option awards made during a shorter window around the filing. Shortening (lengthening) the window under these alternatives would reduce (increase) the amount of information aggregated in one location about options granted in proximity to MNPI releases, potentially resulting in marginally less (more) informed investment and voting decisions.

Consistent with other provisions of Item 402, the proposed amendments would apply to option awards to named executive officers. This, would provide for greater consistency with other existing compensation disclosures. It also would provide information about the effects of option award timing on the amount of compensation and structure of compensation incentives for the executives that are likely to have the most influence on the company's business decisions. As an alternative, we could limit the proposed disclosure to the CEO or expand it to all executives. The alternative of narrowing (or expanding) the set of executives whose option awards would be subject to the new disclosure requirement would result in lower (or higher) disclosure costs, compared to the proposal but also would result in less (or more) information about the timing of option awards, and executive incentives, compared to the proposal. These alternatives would also result in less consistency with other existing compensation disclosures compared with the proposal.

The proposed amendments would require the additional disclosure to be submitted using a structured (*i.e.,* machine-readable) data language. As an alternative, we could require the disclosure as proposed, but not require the use of a structured data language. Compared to the proposal, this alternative could make it harder for investors to extract the disclosure information, potentially increasing the costs they incur in making investment and voting decisions. However, this alternative also would decrease costs for affected filers (particularly for filers with more option grants subject to the new disclosure), compared to the proposal.

6. Request for Comment

67. How common is option spring-loading and bullet-dodging? What are the principal costs and benefits of such practices? Would such practices be likely to decline under the proposal? Do companies typically have policies to avoid granting options around releases of material nonpublic information? Why or why not?

68. What would be the main benefits of the proposed amendments? Would the proposed additional Item 402 disclosure requirements related to option granting practices benefit investors? Would the proposed amendments inform voting decisions? What would be the main costs of the proposed amendments?

69. Would the proposed new compensation table in Item 402 be useful for investors? What are the benefits and costs of the proposed new table?

70. Should we require a different scope of tabular disclosure as part of amended Item 402? Should we require the proposed tabular disclosure to cover a different time frame around filings containing MNPI (such as one day, one week, or thirty days before and after a filing containing MNPI)? Should we require the proposed tabular disclosure to cover only some filings containing MNPI (such as Form 10–K, or Form 10–K and Form 10–Q)? If so, what would be the benefits and costs of such alternative requirements?

71. What alternative disclosure requirements related to the timing of option compensation grants should we consider, and what would be the benefits and costs of such alternatives?

72. Would the proposed requirement to structure the additional quantitative disclosure in Inline XBRL benefit investors? What would be the costs of such a requirement for filers? How would the costs and benefits vary if we were to expand or narrow the scope of structured data requirements, for example to include the narrative disclosures that would be added under the proposed requirements?

E. Additional Disclosure of Insider Gifts of Stock

The Commission is proposing amendments that would require the disclosure of insiders' gifts of stock within two business days on Form 4. This would be a change from the existing rules that allow a stock gift to be disclosed on Form 5, which is required to be filed within 45 days of the end of the year during which the gift was made. This proposed amendment would result in timelier disclosure of such transactions across all affected insiders.

[214] During calendar year 2020, the average (median) filer filed Forms 10–K, 10–Q, 8–K, or amendments to them, on 18 (16) different days, resulting in a potential average (median) disclosure coverage period (14 days before and after such filings) of approximately 207 (221) days.

1. Baseline and Affected Parties

The proposed amendments would affect insiders that make gifts of stock and report them on Form 5 today. We estimate that approximately 700 insiders reported gifts of stock on Form 5 during calendar year 2020 (including a little over 100 insiders that reported gifts both on Form 4 and Form 5).[215] The majority of insiders already report gifts of stock on Form 4. During calendar year 2020, we estimate that approximately 2,700 insiders reported stock gifts on Form 4 (including a little over 100 insiders that made both Form 4 and Form 5 filings reporting stock gifts).

2. Benefits

The proposed amendments to Form 4 to require disclosure of insider gifts of stock would result in timelier availability of information about beneficial ownership by the company's insiders, to the extent that some insiders are not already reporting such gifts of stock on Form 4. Disposition of an insider's shares through a gift reduces that insider's economic exposure to the company and potentially weakens the alignment of incentives with the shareholder value maximization objective. A scenario in which an insider gifts stock while aware of MNPI and the recipient sells the gifted securities while the information remains nonpublic and material is economically equivalent to a scenario in which the insider trades on the basis of MNPI and shares the trading profits with the recipient.

While non-pecuniary motives may be more important in a gift than in an open market sale, the timing of a gift can reveal the insider's beliefs about the company's future share price. For an insider that has decided to make a gift, finding the time when the shares are priced higher (*e.g.,* before the release of negative MNPI) would allow the insider to reduce the effective cost of the gift. In light of this, disclosure of timely information about the stock gift could be informative for investors evaluating the company's share price and making investment or sale decisions.[216] However, these information benefits would be lower if the officer or director does not consider the cost of a gift (*e.g.,* because the motive for the gift is solely altruistic or the amount of the gift is inconsequential in the context of the insider's overall net worth).

Finally, the proposed requirement to disclose insiders' stock gifts on Form 4 would facilitate market scrutiny and discourage stock gifts based on MNPI, thereby reducing the associated incentive distortions. While an insider's benefit from using MNPI to time stock gifts is likely smaller than in the case of timing trades, the ability to profit from such stock gift timing is expected to have a similar direction of the effect on insider incentives (such as incentives to pursue inefficient corporate decisions or to distort disclosure, in line with the discussion in Section IV.A above).

These benefits of the proposed Form 4 requirements would be reduced to the extent that many insider gifts of stock already are reported on Form 4, as noted in Section IV.E.1 above.

3. Costs

Amended Form 4 disclosure with regard to gifts of stock would result in additional costs for insiders. Direct costs would include additional compliance-related costs. Indirect costs could include reputational and investor relations costs stemming from increased market scrutiny of gifts of stock.

4. Effects on Efficiency, Competition, and Capital Formation

We expect the proposed amendments to incrementally decrease the information asymmetry between insiders and investors. Recent disposition of shares through gifts of stock informs investors about changes to officers' and directors' incentives derived from holdings of company stock. Timely information about the disposition of shares through stock gifts could in some circumstances inform investors about officers' and directors' outlook on future changes to the company's share prices. Both factors would tend to result in more informationally efficient prices and more efficient allocation of capital in investor portfolios.

Importantly, we expect the proposed amendments to draw market scrutiny to insiders' use of MNPI in the timing of stock gifts, potentially decreasing the incidence of such stock gift timing. This reduces insiders' incentives to manipulate corporate disclosures around stock gifts, which could in turn yield more informationally efficient share prices and more efficient allocation of capital in investor portfolios. The amendments also could marginally reduce insider incentives to pursue inefficient corporate investment decisions driven by personal gain from gifts based on MNPI, in line with the discussion in Section IV.E.2. and IV.A above.

Because the proposed disclosure amendments would apply broadly across all insiders' stock gifts, generally, we do not anticipate them to result in meaningful competitive disparities among insiders.

5. Reasonable Alternatives

We are proposing to require additional disclosure of insider gifts of stock. As an alternative, we could narrow the scope of the proposed disclosure to apply only to officers and directors, or only to a certain type of gifts of stock (*e.g.,* charitable gifts to charities affiliated with the insider). Compared to the proposal, narrowing the scope of gifts subject to the disclosure could provide less information to market participants but also result in lower aggregate costs. Further, because the majority of insiders already disclose gifts on Form 4, the economic significance of potential exemptions under this alternative may be modest. The proposed requirement would provide consistency in the timeliness of reporting of stock gifts across insiders.

6. Request for Comment

73. Would the proposed additional Form 4 disclosure requirements related to insider gifts of stock benefit investors? What would be the main benefits of the proposed Form 4 amendments for investors?

74. What would be the costs of the proposed Form 4 amendments for filers?

75. How prevalent is the timing of insider gifts of stock around material nonpublic information?

76. Do companies have policies or practices to prevent insider gifts of stock in connection with material nonpublic information?

77. What alternative disclosure requirements related to insider gifts of stock should we consider, and what would be the benefits and costs of such alternatives?

[215] The estimate is based on Form 5 data in Thomson Reuters/Refinitiv insiders dataset. Gifts of stock are identified based on transaction code ''G'' (''bona fide gift'').

[216] One recent study finds evidence of informed timing of gifts of stock by the subset of insiders that are beneficial owners. *See* Sureyya Burcu Avci, Cindy A. Schipani, H. Nejat Seyhun, and Andrew Verstein, Insider Giving, *Duke Law Journal,* 71 (2021) (forthcoming). The study also points to gift backdating as a potential consequence of delayed reporting of stock gifts. The accelerated disclosure would likely reduce the potential for backdating of insider gifts. Backdating of reported insider disposition of stock on the beneficial ownership disclosure could provide insufficient information to investors about the changes to an insider's ownership incentives and the incentive alignment with shareholder interests (limiting investors' ability to retrospectively evaluate an insider's corporate decisions in conjunction with the insider's ownership incentives and potentially gauge the extent of agency conflicts).

V. Paperwork Reduction Act

A. Summary of the Collections of Information

Certain provisions of our rules, schedules, and forms that would be affected by the rule amendments contain ''collection of information'' requirements within the meaning of the Paperwork Reduction Act of 1995 (''PRA'').[217] The Commission is submitting the proposed amendments to the Office of Management and Budget (''OMB'') for review in accordance with the PRA.[218] The hours and costs associated with preparing, filing, and sending the schedules and forms constitute reporting and cost burdens imposed by each collection of information. An agency may not conduct or sponsor, and a person is not required to comply with, a collection of information unless it displays a currently valid OMB control number. The titles for the collections of information are:

- Form 10–K (OMB Control No. 3235–0063);
- Form 10–Q (OMB Control No. 3235–0070);
- Schedule 14A (OMB Control No. 3235–0059);
- Schedule 14C (OMB Control No. 3235–0057);
- Form 4 (OMB Control Number 3235–0287);
- Form 20–F (OMB Control Number 3235–0288);
- Form 5 (OMB Control Number 3235–0362);
- Regulation S–K (OMB Control No. 3235–0071);
- Regulation S–T (OMB Control No. 3235–0424);[219] and
- Rule 10b5–1 (a proposed new collection of information).

The forms, schedules, and regulations listed above were adopted under the Securities Act and/or the Exchange Act. These regulations, schedules, and forms set forth the disclosure requirements for registration statements, periodic and current reports, distribution reports, and proxy and information statements filed by registrants to help investors make informed investment and voting decisions. Compliance with these information collections is mandatory. Responses to these information collections are not kept confidential and there is no mandatory retention period for the information disclosed.

The Commission is also proposing amendments to Rule 10b5–1(c)(1)(ii) that would impose a certification requirement as a condition to the Rule 10b5–1(c)(1) affirmative defense. Under the proposed amendment, if a director or officer (as defined in Rule 16a-1(f)) of the issuer of the securities adopts a Rule 10b5–1(c)(1) trading arrangement, as a condition to the availability of the affirmative defense, such director or officer would be required to furnish to the issuer a written certification. The use of the Rule 10b5–1(c)(1) affirmative defense is voluntary, and compliance with this proposed information collection would be mandatory only if a respondent chooses to rely on the affirmative defense. Responses to this information collection would not be confidential and there is no mandatory retention period for the collection of information.

A description of the proposed amendments, including the need for the information and its use, as well as a description of the likely respondents, can be found in Section II above, and a discussion of the economic effects of the proposed amendments can be found in Section IV above.

B. Estimates of the Proposed Amendments' Effects on the Collections of Information

The following table summarizes the estimated effects of the proposed amendments on the paperwork burdens associated with the affected forms.[220]

PRA TABLE 1—ESTIMATED PAPERWORK BURDEN EFFECTS OF THE PROPOSED AMENDMENTS

Proposed amendments	Affected forms	Estimated burden increase
Item 402(x): • Require disclosure of a registrant's policies and practices on the timing of awards of stock options, SARs or similar instruments in relation to the disclosure of material nonpublic information by the registrant, including how the board determines when to grant options, whether the board or compensation committee takes material nonpublic information into account when determining the timing and terms of an award; and whether the registrant has timed the disclosure of material nonpublic information for the purpose of affecting the value of executive compensation. • Require tabular disclosure of each option award granted within 14 calendar days before or after the filing of a periodic report, an issuer share repurchase, or the filing or furnishing of a current report on Form 8–K that contains material nonpublic information. • Require information to be reported using a structured data language.	Forms 10–K* and Schedules 14A, and 14C.	9 hour increase in compliance burden per form.
Item 408(a): • Require disclosure of the adoption or termination of any contract, instruction or written plan for the purchase or sale of securities whether or not intended to satisfy the affirmative defense conditions of Rule 10b5–1(c), by the issuer, directors and officers (as defined in Exchange Act Rule 16a–1(f)), including the name and title of the director or officer; and a description of the material terms of the contract, instruction or written plan.	Forms 10–K and 10–Q	15 hour increase in compliance burden per form.

[217] 44 U.S.C. 3501 *et seq.*

[218] 44 U.S.C. 3507(d) and 5 CFR 1320.11.

[219] The paperwork burdens for Regulation S–K and Regulation S–T are imposed through the forms, schedules and reports that are subject to the requirements in these regulations and are reflected in the analysis of those documents. To avoid a PRA inventory reflecting duplicative burdens and for administrative convenience, we assign a one-hour burden to Regulations S–K and S–T.

[220] The OMB PRA filing inventories represent a three-year average. These averages may not align with the actual number of filings in any given year.

PRA TABLE 1—ESTIMATED PAPERWORK BURDEN EFFECTS OF THE PROPOSED AMENDMENTS—Continued

Proposed amendments	Affected forms	Estimated burden increase
• Require information to be reported using a structured data language.		
Item 16J/Item 408(b):		
• Require disclosure of whether the registrant has adopted (and if not, why) insider trading policies and procedures governing the purchase, sale, and other dispositions of the registrant's securities by directors, officers and employees that are reasonably designed to promote compliance with insider trading laws, rules and regulations, and any listing standards applicable to the registrant.	Forms 20–F and 10–K* and Schedules 14A, and 14C.	4 hour increase in compliance burden per form.
• Require information to be reported using a structured data language.		
Form 4:		
• Require reporting of gifts of securities	Form 4	0.5 hour increase in compliance burden per form.
• Require new checkbox to indicate that a sale or purchase reported on the form was made pursuant to a Rule 10b5–1(c), and disclosure of the date of adoption of the plan.		
• New optional checkbox that would permit a filer to indicate whether a sale or purchase reported on the form was made pursuant to a contract, instruction or written plan to purchase or sell securities not intended to satisfy the affirmative defense conditions of Rule 10b5–1(c).		
Form 5:		
• Require new checkbox to indicate that a sale or purchase reported on the form was made pursuant to a Rule 10b5–1(c) plan, and disclosure of the date of adoption of the plan.	Form 5	0.25 hour increase in compliance burden per form.
• New optional checkbox that would permit a filer to indicate whether a sale or purchase reported on the form was made pursuant to a contract, instruction or written plan to purchase or sell securities not intended to satisfy the affirmative defense conditions of Rule 10b5–1(c).		
Rule 10b5–1(c)(1)(ii):		
• Require directors and officers (as defined in Exchange Act Rule 16a–1(f)), as a condition to the affirmative defense, to promptly furnish to the issuer a written certification.		1.5 hour compliance burden per certification.

Notes:

*The burden estimate for Form 10–K assumes that Schedules 14A and 14C would be the primary disclosure documents for the information provided in response to proposed Item 402(w) and Item 408(b) of Regulation S–K and the disclosure requirement under Form 10–K would be satisfied by incorporating the information by reference from the proxy or information statement. Our PRA estimates include an estimated one hour burden for Form 10–K to account for the incorporation of the information.

C. Incremental and Aggregate Burden and Cost Estimates

Below we estimate the incremental and aggregate increase in paperwork burden as a result of the proposed amendments. These estimates represent the average burden for all respondents, both large and small. In deriving our estimates, we recognize that the burdens will likely vary among individual respondents based on a number of factors.

We do not believe that the proposed amendments would change the frequency of responses to the existing collections of information; rather, we estimate that the proposed amendments would change only the burden per response. For the new collection of information, we estimate that there would be 7,200 responses based on the staff's analysis, discussed in Section IV.B.1, of beneficial ownership filings on Forms 3, 4, and 5 made in the 2020 calendar year.[221] Based on the data from these filings, approximately 4,800 officers and directors reported a transaction pursuant to a Rule 10b5–1 trading arrangement. As noted above, the number of officers and directors using a Rule 10b5–1 trading arrangement is likely larger. Accordingly, we adjusted the estimate upward by 50 percent.

The burden estimates were calculated by multiplying the estimated number of responses by the estimated average amount of time it would take a respondent to prepare and review disclosure required under the proposed amendments. For purposes of the PRA, the burden is to be allocated between internal burden hours and outside professional costs.

The table below sets forth the percentage estimates we typically use for the burden allocation for each form. We also estimate that the average cost of retaining outside professionals is $400 per hour.[222]

[221] *See supra* note 116 and accompanying text.

[222] We recognize that the costs of retaining outside professionals may vary depending on the nature of the professional services, but for purposes of this PRA analysis, we estimate that such costs would be an average of $400 per hour. This estimate is based on consultations with several registrants, law firms, and other persons who regularly assist registrants in preparing and filing reports with the Commission.

PRA TABLE 2—STANDARD ESTIMATED BURDEN ALLOCATION FOR SPECIFIED FORMS AND SCHEDULES

Form/schedule type	Internal (%)	Outside professionals (%)
Forms 10–K, 10–Q, 20–F and Schedules 14A and 14C	75	25
Forms 4 and 5	100	
Rule 10b5–1	100	

The table below illustrates the incremental change to the total annual compliance burden of affected forms and schedules, in hours and in costs, as a result of the proposed amendments.

PRA TABLE 3—CALCULATION OF THE INCREMENTAL CHANGE IN BURDEN ESTIMATES OF CURRENT RESPONSES RESULTING FROM THE PROPOSED AMENDMENTS

Form/schedule	Number of estimated affected responses (A) [223]	Estimated burden hour increase/ affected response (B)	Total incremental increase in burden hours (C) = (A) × (B)	Estimated increase in internal burden hours (D) = (C) × (allocation %)	Estimated increase in outside professional hours (E) = (C) × (allocation %)	Total increase in outside professional costs ($) (F) = (E) × $400
10–K	8,292	16	132,672	99,504	33,168	13,267,200
10–Q	22,925	15	343,875	257,906.25	85,968.75	34,387,500
20–F	729	4	2,916	2,187	729	291,600
14A	6,369	13	82,797	62,097.75	20,699.25	8,279,700
14C	569	13	7,397	5,547.75	1,849.25	739,700
4	338,207	0.5	169,103.5	169,103.5	0	0
5	5,939	0.25	1,484.75	1,484.75	0	0
Total			740,245.25	597,831	142,414.25	56,965,700

The following tables summarizes the requested paperwork burden changes to existing information collections, including the estimated total reporting burdens and costs, under the proposed amendments.

PRA TABLE 4—REQUESTED PAPERWORK BURDEN UNDER THE PROPOSED AMENDMENTS [224]

Form/sch.	Current burden			Program change			Requested change in burden		
	Current annual responses (A)	Current burden hours (B)	Current cost burden (C)	Number of affected responses (D)	Increase in internal hours (E)	Increase in outside professional costs (F)	Annual responses (G) = (A)	Burden hours (H) = (B) + (E)	Cost burden (I) = (C) + (F)
10–K	8,292	14,188,040	$1,893,793,119	8,292	99,504	33,168	8,292	14,287,544	$1,893,826,287
10–Q	22,925	3,182,333	421,490,754	22,925	257,906	85,969	22,925	3,440,239	421,576,723
20–F	729	479,261	576,824,025	729	2,187	$291,600	729	481,448	577,115,625
14A	6,369	777,590	103,678,712	6,369	62,098	20,699	6,369	839,688	103,699,411
14C	569	56,356	7,514,944	569	5,548	1,849	569	61,904	7,516,793
4	338,207	169,104	0	338,207	169,104	0	338,207	338,208	0
5	5,939	5,939	0	5,939	1,485	0	5,939	7,424	0
Total								19,456,455	3,003,734,839

PRA Table 5 summarizes the requested paperwork burden for the proposed new collection of information—namely, the proposed new Rule 10b5–1(c)(1)(ii) certification, including the estimated total reporting burdens and costs. For purposes of the PRA, we estimate that the Rule 10b5–1(c)(1)(ii) certification would entail a one hour compliance burden per response with 7,200 annual responses.

[223] The number of estimated affected responses is based on the number of responses in the Commission's current OMB PRA filing inventory. The OMB PRA filing inventory represents a three-year average.

[224] Figures in this table have been rounded to the nearest whole number.

PRA TABLE 5—REQUESTED PAPERWORK BURDEN FOR THE NEW COLLECTION OF INFORMATION

Collection of information	Proposed paperwork burden	
	Annual responses (A)	Burden hours (A) × 1
Rule 10b5–1(c)(1)(ii) Certification	7,200	7,200

Request for Comment

Pursuant to 44 U.S.C. 3506(c)(2)(B), we request comment in order to:

- Evaluate whether the proposed collections of information are necessary for the proper performance of the functions of the Commission, including whether the information will have practical utility;
- Evaluate whether the Commission's estimates of the burden of the proposed collection of information are accurate;
- Determine whether there are ways to enhance the quality, utility, and clarity of the information to be collected;
- Evaluate whether there are ways to minimize the burden of the collection of information on those who respond, including through the use of automated collection techniques or other forms of information technology; and
- Evaluate whether the proposed amendments would have any effects on any other collection of information not previously identified in this section.

Any member of the public may direct to us any comments concerning the accuracy of these burden estimates and any suggestions for reducing these burdens. Persons submitting comments on the collection of information requirements should direct their comments to the Office of Management and Budget, Attention: Desk Officer for the U.S. Securities and Exchange Commission, Office of Information and Regulatory Affairs, Washington, DC 20503, and send a copy to, Vanessa A. Countryman, Secretary, U.S. Securities and Exchange Commission, 100 F Street NE, Washington, DC 20549–1090, with reference to File No. S7–20–21. Requests for materials submitted to OMB by the Commission with regard to the collection of information should be in writing, refer to File No. S7–20–21 and be submitted to the U.S. Securities and Exchange Commission, Office of FOIA Services, 100 F Street NE, Washington DC 20549–2736. OMB is required to make a decision concerning the collection of information between 30 and 60 days after publication of this proposed rule. Consequently, a comment to OMB is best assured of having its full effect if the OMB receives it within 30 days of publication.

VI. Initial Regulatory Flexibility Act Analysis

This Initial Regulatory Flexibility Analysis (''IRFA'') has been prepared in accordance with the Regulatory Flexibility Act (''RFA'').[225] It relates to proposed amendments to Rule 10b5–1(c)(1); Regulation S–K, Forms 10–K, 10–Q, 20–F, 4, and 5; and Schedules 14A and 14C.

A. Reasons for, and Objectives of, the Proposed Action

The purpose of the proposed amendments is to address potentially abusive practices associated with Rule 10b5–1 trading arrangements, grants of options and other equity instruments with similar features and the gifting of securities. The proposed amendments are also intended to provide greater transparency to investors about issuer and insider trading arrangements and restrictions, as well as insider compensation and incentives, enabling more informed voting and investment and decisions about an issuer. The proposed amendments are discussed in more detail in Section II above. We discuss the economic impact and potential alternatives to the amendments in Section IV, and the estimated compliance costs and burdens of the amendments under the PRA in Section V above.

B. Legal Basis

We are proposing the amendments under Sections 3(b), 6, 7, 10, 17, 19(a), and 28 of the Securities Act; Sections 3, 9, 10, 12, 13, 14, 15(d), 20A, 21A, 23(a), and 36 of the Exchange Act; and Sections 8, 20(a), 24(a), 30 and 38 of the Investment Company Act; and 15 U.S.C. 7264.

C. Small Entities Subject to the Proposed Rules

The proposed amendments would apply to registrants that are small entities. The Regulatory Flexibility Act defines ''small entity'' to mean ''small business,'' ''small organization,'' or ''small governmental jurisdiction.''[226] For purposes of the Regulatory Flexibility Act, under our rules, a registrant, other than an investment company, is a ''small business'' or ''small organization'' if it had total assets of $5 million or less on the last day of its most recent fiscal year and is engaged or proposing to engage in an offering of securities that does not exceed $5 million.[227] Under 17 CFR 270.0–10, an investment company, including a business development company, is considered to be a small entity if it, together with other investment companies in the same group of related investment companies, has net assets of $50 million or less as of the end of its most recent fiscal year. An investment company, including a business development company,[228] is considered to be a ''small business'' if it, together with other investment companies in the same group of related investment companies, has net assets of $50 million or less as of the end of its most recent fiscal year.[229] Commission staff estimates that, as of June 2021, there were 660 issuers,[230] and 9 business development companies that may be considered small entities that would be subject to the proposed amendments.[231]

D. Reporting, Recordkeeping, and Other Compliance Requirements

The proposed amendments to Rule 10b5–1(c)(1) would apply to small entities to the same extent as other entities, irrespective of size. The proposed amendments to Rule 10b5–1(c)(1) would not directly impose any

[225] 5 U.S.C. 601 *et seq.*

[226] 5 U.S.C. 601(6).

[227] *See* Exchange Act Rule 0–10(a) [17 CFR 240.0–10(a)].

[228] Business development companies are a category of closed-end investment company that are not registered under the Investment Company Act [15 U.S.C. 80a–2(a)(48) and 80a–53–64].

[229] 17 CFR 270.0–10(a).

[230] This estimate is based on staff analysis of Form 10–K filings on EDGAR, or amendments thereto, filed during the calendar year of January 1, 2020 to December 31, 2020, or filed by September 1, 2021, and on data from XBRL filings, Compustat, and Ives Group Audit Analytics.

[231] These estimates are based on staff analysis of Morningstar data and data submitted by investment company registrants in forms filed on EDGAR as of June 30, 2021.

recordkeeping or compliance requirements on any small entities. We anticipate that the nature of any benefits and costs associated with the proposed amendments to Rule 10b5–1(c)(1) would be similar for large and small entities. Accordingly, we refer to the discussion of the proposed amendments' economic effects on all affected parties, including small entities, in Section IV.B. above. Consistent with that discussion, we anticipate that the economic benefits and costs likely would vary widely among small entities based on a number of factors, including the nature and conduct of their businesses, which makes it difficult to project the economic impact on small entities with precision. However, we request comment on how the proposed amendments to Rule 10b5–1(c)(1) would affect small entities.

The proposed disclosure amendments to Regulation S–K, Forms 10–K, 10–Q, and Schedules 14A and 14C are designed to provide greater transparency about officer, director, and issuer trading arrangements; policies and procedures with respect to insider trading; and the timing of executive compensation option awards in relation to the release of material nonpublic information. If adopted, these amendments generally would:

- Disclosure regarding the adoption and termination of Rule 10b5–1(c) and non-Rule 10b5–1(c) trading arrangements of directors, officers, and the issuer, as well as the material terms of such trading arrangements;
- Disclosure of whether the issuer has adopted (and if not, why) insider trading policies and procedures governing the purchase, sale, and other dispositions of the issuer's securities by directors, officers and employees that are reasonably designed to promote compliance with insider trading laws, rules and regulations, and any listing standards applicable to the issuer;
- Narrative disclosure of an issuer's policies and practices on the timing of awards of stock options, SARs or similar instruments; and
- Tabular disclosure of each option award granted to a named executive officer within 14 calendar days before or after the filing of a periodic report, an issuer share repurchase, or the filing or furnishing of a current report on Form 8–K that contains material nonpublic information.

In addition, the proposed amendments to Forms 4 and 5 would:

- Add a Rule 10b5–1 checkbox to these that would require a Form 4 or 5 filer to indicate whether a sale or purchase reported on that form was made pursuant to a Rule 10b5–1 trading arrangement. Filers would also be required to provide the date of adoption of the Rule 10b5–1 trading arrangement;
- Add a second, optional checkbox to both of Forms 4 and 5 that would allow a filer to indicate whether a transaction reported on the form was made pursuant to a contract, instruction, or written plan that is not intended to satisfy the conditions of Rule 10b5–1(c)(1); and
- Require the reporting of dispositions of bona fide gifts of equity securities on Form 4.

We anticipate that the direct costs of preparing disclosure in response to the proposed amendments will likely be relatively small as such information will be readily available to companies. To the extent that the proposed disclosure requirements has a greater effect on small filers relative to large filers, they could result in adverse effects on competition. The fixed component of the legal costs of preparing the disclosure could be one contributing factor. Compliance with the proposed amendments may require the use of professional skills, including legal skills. We request comment on how the proposed disclosure amendments would affect small entities.

E. Duplicative, Overlapping, or Conflicting Federal Rules

Proposed Item 408(b) may partially duplicate and overlap with an existing disclosure requirement under Item 406 of Regulation S–K, which requires an issuer to disclose whether it has adopted a code of ethics that applies to its principal executive officer, chief financial officer, and other appropriate executives and, if it has not adopted such a code, to state why it has not done so. An issuer's existing code of ethics may contain insider trading policies. In such instances, an issuer could cross-reference to the particular components of its code of ethics that constitute insider trading policies and procedures in response to proposed Item 408(b)(2). Other than Item 408(b), the proposed amendments would not duplicate, overlap, or conflict with other Federal rules.

We additionally note that in a separate release, we are, among other things, proposing rule and form amendments that would require an issuer to provide timely disclosure regarding repurchases of its equity securities, and disclosure of whether the repurchases was pursuant to a Rule 10b5–1 plan. In connection with the potential adoption of these rules, we would plan to coordinate these rulemakings to avoid any duplication, overlap or conflict between the rules.

F. Significant Alternatives

The RFA directs us to consider alternatives that would accomplish our stated objectives, while minimizing any significant adverse impact on small entities. In connection with the amendments, we considered the following alternatives:

- Establishing different compliance or reporting requirements that take into account the resources available to small entities;
- Clarifying, consolidating, or simplifying compliance and reporting requirements under the rules for small entities;
- Using performance rather than design standards; and
- Exempting small entities from all or part of the requirements.

Insider trading imposes costs on the investors in a company.[232] The proposed disclosure amendments and the amendments to Rule 10b5–1(c)(1) are intended to provide greater transparency to investors and decrease information asymmetries between corporate insiders and outside investors and to deter potentially abusive and problematic practices associated with the use of Rule 10b5–1(c)(1) trading arrangements, grants of option awards, and the gifting of securities. Importantly, we anticipate the proposed amendments will work in tandem to significantly reduce improper insider trading through Rule 10b5–1(c)(1) trading arrangements. As discussed in above in Section IV, deterring insider trading will result in benefits for investor protection, capital formation, and orderly and efficient markets. By deterring insider trading, the amendments would disincentivize insider behavior that undermines investor confidence and harms the securities markets. For these reasons, we do not believe it would be appropriate to provide simplified or consolidated reporting requirements, a differing compliance timetable, or an exemption for small entities from all or part of the proposed amendments.

With respect to using performance rather than design standards, the proposed amendments use a combination of design and performance standards in order to promote uniform compliance requirements for all registrants. We believe the proposed amendments would be more beneficial to investors and small entities if there are uniform requirements that must be satisfied for a trading arrangement to be eligible for the Rule 10b5–1(c)(1) affirmative defense and specific

[232] *See supra* Section IV.

disclosure requirements that apply to all registrants. In addition, the proposed disclosure amendments should result in more comprehensive and clear disclosure.

G. Request for Comments

We encourage the submission of comments with respect to any aspect of this Initial Regulatory Flexibility Analysis. In particular, we request comments regarding:

- The number of small entity issuers that may be affected by the proposed amendments;
- The existence or nature of the potential impact of the proposed amendments on small entity issuers discussed in the analysis;
- How the proposed amendments could further lower the burden on small entities; and
- How to quantify the impact of the proposed amendments.

Please describe the nature of any impact and provide empirical data supporting the extent of the impact. Such comments will be considered in the preparation of the Final Regulatory Flexibility Analysis, if the proposed amendments are adopted, and will be placed in the same public file as comments on the proposed amendments themselves.

VII. Small Business Regulatory Enforcement Fairness Act

For purposes of the Small Business Regulatory Enforcement Fairness Act of 1996 (''SBREFA''),[233] the Commission must advise OMB as to whether the proposed amendments constitute a ''major'' rule. Under SBREFA, a rule is considered ''major'' where, if adopted, it results, or is likely to result, in:

- An annual effect on the economy of $100 million or more (either in the form of an increase or a decrease);
- A major increase in costs or prices for consumers or individual industries; or
- Significant adverse effects on competition, investment or innovation.

We request comment on whether the proposed amendments would be a ''major rule'' for purposes of SBREFA. We solicit comment and empirical data on: (a) the potential effect on the U.S. economy on an annual basis; (b) any potential increase in costs or prices for consumers or individual industries; and (c) any potential effect on competition, investment or innovation. Commenters are requested to provide empirical data and other factual support for their views to the extent possible.

VIII. Statutory Authority

The amendments contained in this release are being proposed under the authority set forth in Sections 3(b), 6, 7, 10, 17, 19(a), and 28 of the Securities Act; Sections 3, 9, 10, 12, 13, 14, 15(d), 20A, 21A, 23(a), and 36 of the Exchange Act; and Sections 8, 20(a), 24(a), 30 and 38 of the Investment Company Act; and 15 U.S.C. 7264.

List of Subjects in 17 CFR Parts 229, 232, 240, and 249

Reporting and recordkeeping requirements, Securities.

For the reasons set out in the preamble, the Commission proposes to amend title 17, chapter II of the Code of Federal Regulations as follows:

PART 229—STANDARD INSTRUCTIONS FOR FILING FORMS UNDER SECURITIES ACT OF 1933, SECURITIES EXCHANGE ACT OF 1934 AND ENERGY POLICY AND CONSERVATION ACT OF 1975—REGULATION S–K

■ 1. The authority citation for part 229 continues to read as follows:

Authority: 15 U.S.C. 77e, 77f, 77g, 77h, 77j, 77k, 77s, 77z–2, 77z–3, 77aa(25), 77aa(26), 77ddd, 77eee, 77ggg, 77hhh, 77iii, 77jjj, 77nnn, 77sss, 78c, 78i, 78j, 78j–3, 78l, 78m, 78n, 78n–1, 78o, 78u–5, 78w, 78ll, 78 mm, 80a–8, 80a–9, 80a–20, 80a–29, 80a–30, 80a–31(c), 80a–37, 80a–38(a), 80a–39, 80b–11 and 7201 *et seq.;* 18 U.S.C. 1350; sec. 953(b), Pub. L. 111–203, 124 Stat. 1904 (2010); and sec. 102(c), Pub. L. 112–106, 126 Stat. 310 (2012).

■ 2. Further amend § 229.402, as proposed to be amended at 80 FR 26330 (May 7, 2015) and 80 FR 41144 (July 14, 2015), by adding paragraph (x) to read as follows:

§ 229.402 (Item 402) Executive compensation.

* * * * *

(x) *Narrative disclosure of the registrant's policies and practices related to the grant of equity awards in coordination with the release of material nonpublic information.* (1) Discuss the registrant's policies and practices on the timing of awards of stock options, SARs or similar instruments in relation to the disclosure of material nonpublic information by the registrant, including how the board determines when to grant options (for example, whether awards are granted on a predetermined schedule); whether the board or compensation committee takes material nonpublic information into account when determining the timing and terms of an award, and if so, how, the board or compensation committee takes material nonpublic information into account when determining the timing and terms of an award; and whether the registrant has timed the disclosure of material nonpublic information for the purpose of affecting the value of executive compensation.

(2)(i) If during the last completed fiscal year, a grant of stock options, SARs or similar instruments was awarded to a named executive officer within a 14-day period before or after the filing of a periodic report on Form 10–Q or Form 10–K, an issuer share repurchase, or the filing or furnishing of a current report Form 8–K that discloses material nonpublic information (including earnings information), provide the information specified in paragraph (x)(2)(ii) of this section, concerning each such award for each of the named executive officers on an aggregated basis in the following tabular format:

Name (a)	Grant date (b)	Number of securities underlying the option award (c)	Exercise or strike price of option award ($/Sh) (d)	Grant date fair value of stock and option award (e)	Market value of the securities underlying award one trading day before disclosure of material nonpublic information (f)	Market value of the securities underlying award one trading day after disclosure of material nonpublic information (g)
PEO						
PFO						
A						
B						
C						

[233] Public Law 104–121, Title II, 110 Stat. 857 (1996).

(ii) The Table shall include:

(A) The name of the executive officer (column (a));

(B) On an award-by-award basis, the grant date for option awards reported in the table (column (b));

(C) On an award-by-award basis, the number of securities underlying the options (column (c));

(D) The per-share exercise or strike price of the option award (column (d));

(E) On an award-by-award basis, the grant date fair value of each equity award computed in accordance with Financial Accounting Standards Board (FASB) Accounting Standards Codification (ASC) Topic 718 (column (e));

(F) If the award was made within 14 calendar days before the filing of a periodic report on Form 10–Q or Form 10–K, an issuer share repurchase, or the filing or furnishing of a current report on Form 8–K that discloses material nonpublic information (including earnings information), disclose for each instrument reported in column (c), the market value of the securities underlying the award the trading day before disclosure of material nonpublic information (column (f)); and

(G) If the award was made within 14 calendar days after the filing of a periodic report on Form 10–Q or Form 10–K, an issuer share repurchase, or the filing or furnishing of a current Form 8–K that discloses material nonpublic information, disclose for each instrument reported in column (c), the market value securities underlying the award the trading day after disclosure of material nonpublic information (column (g)).

Instruction 1 to Item 402(x)(2). 1. A registrant that is a smaller reporting company may limit the disclosures in the table to its PEO, the two most highly compensated executive officers other than the PEO who were serving as executive officers at the end of the last completed fiscal year, and up to two additional individuals who would have been the most highly compensated but for the fact that the individual was not serving as executive officers at the end of the last completed fiscal year.

2. Compute the market value of stock reported in column (f) by multiplying the closing market price of the registrant's stock at the end of the trading day before the disclosure of material nonpublic information by the number of shares or units of stock or the amount of equity incentive plan awards, respectively. Compute the market value of stock reported in column (g) by multiplying the closing market price of the registrant's stock at the end of the trading day after the disclosure of material nonpublic information by the number of shares or units of stock or the amount of equity incentive plan awards, respectively.

(3) Provide the disclosure required by this paragraph (x) in an Interactive Data File as required by 17 CFR 232.405 (Rule 405 of Regulation S–T) in accordance with the EDGAR Filer Manual.

* * * * *

■ 3. Add § 229.408 to read as follows:

§ 229.408 (Item 408) Insider trading arrangements and policies.

(a)(1) Disclose whether, during the registrant's last fiscal quarter (the registrant's fourth fiscal quarter in the case of an annual report), the registrant has adopted or terminated any contract, instruction or written plan for the purchase or sale of securities of the registrant whether or not intended to satisfy the affirmative defense conditions of § 240.10b5–1(c) of this chapter (Rule 10b5–1(c)), and provide a description of the material terms of the contract, instruction or written plan, including:

(i) The date of adoption or termination;

(ii) The duration of the contract, instruction or written plan; and

(iii) The aggregate amount of securities to be sold or purchased pursuant to the contract, instruction or written plan.

(2) Disclose whether, during the registrant's last fiscal quarter (the registrant's fourth fiscal quarter in the case of an annual report), any director or officer (as defined in § 240.16a–1(f) of this chapter) has adopted or terminated any contract, instruction or written plan for the purchase or sale of securities of the registrant whether or not intended to satisfy the affirmative defense conditions of Rule 10b5–1(c) and provide a description of the material terms the contract, instruction or written plan including:

(i) The name and title of the director or officer;

(ii) The date on which the director or officer adopted or terminated the contract, instruction or written plan;

(iii) The duration of the contract, instruction or written plan; and

(iv) The aggregate number of securities to be sold or purchased pursuant to the contract, instruction or written plan.

(3) Provide the disclosure required by this paragraph (a) in an Interactive Data File as required by 17 CFR 232.405 (Rule 405 of Regulation S–T) in accordance with the EDGAR Filer Manual.

Note 1 to paragraph (a). As specified in 17 CFR 240.10b5–1, any modification or amendment to a prior contract, instruction, or written plan is deemed to be the termination of such prior contract, instruction, or written plan, and the adoption of a new contract, instruction, or written plan.

(b)(1) Disclose whether the registrant has adopted insider trading policies and procedures governing the purchase, sale, and other dispositions of the registrant's securities by directors, officers and employees that are reasonably designed to promote compliance with insider trading laws, rules, and regulations, and any listing standards applicable to the registrant. If the registrant has not adopted such policies and procedures explain why it has not done so.

(2) If the registrant has adopted insider trading policies and procedures, disclose such policies and procedures.

(3) Provide the disclosure required by this paragraph (b) in an Interactive Data File as required by Rule 405 of Regulation S–T in accordance with the EDGAR Filer Manual.

PART 232—REGULATION S–T — GENERAL RULES AND REGULATIONS FOR ELECTRONIC FILINGS

■ 4. The general authority citation for part 232 continues to read as follows:

Authority: 15 U.S.C. 77c, 77f, 77g, 77h, 77j, 77s(a), 77z–3, 77sss(a), 78c(b), 78*l,* 78m, 78n, 78o(d), 78w(a), 78*ll,* 80a–6(c), 80a–8, 80a–29, 80a–30, 80a–37, 7201 *et seq.;* and 18 U.S.C. 1350, unless otherwise noted.

* * * * *

■ 5. Amend § 232.405 by:

■ a. Removing the word ''and'' at the end of paragraph (b)(1)(i);

■ b. In paragraph (b)(1)(ii), removing ''Article 12 of Regulation S–X (§§ 210.12–01–210.12–29)'' and the period at the end of the paragrpah and adding ''§§ 210.12–01 through 210.12–29 of this chapter (Article 12 of Regulation S–X)'' and ''; and'' in their places, respectively;

■ c. Adding paragraph (b)(1)(iii);

■ d. Removing the word ''and'' at the end of paragraph (b)(3)(i)(A);

■ e. Adding the word ''and'' at the end of paragraph (b)(3)(i)(B); and

■ f. Adding paragraphs (b)(3)(i)(C) and (b)(4).

The additions read as follows:

§ 232.405 Interactive Data File submissions.

* * * * *

(b) * * *

(1) * * *

(iii) The disclosure set forth in paragraph (b)(4) of this section.

* * * * *

(3) * * *

(i) * * *

(C) The disclosure set forth in paragraph (b)(4) of this section;

* * * * *

(4) An Interactive Data File must consist of the disclosures provided under 17 CFR part 229 (Regulation S–K) and related provisions that are required to be tagged, including, as applicable:

(i) Section 229.402(x)(2) of this chapter (Item 402(x)(b) of Regulation S–K);

(ii) Section 229.408(a)(3) of this chapter (Item 408(a)(3) of Regulation S–K); and

(iii) Section 229.408(b)(3) of this chapter (Item 408(b)(3) of Regulation S–K).

* * * * *

PART 240—GENERAL RULES AND REGULATIONS, SECURITIES EXCHANGE ACT OF 1934

■ 6. The general authority citation for part 240 continues to read as follows:

Authority: 15 U.S.C. 77c, 77d, 77g, 77j, 77s, 77z–2, 77z–3, 77eee, 77ggg, 77nnn, 77sss, 77ttt, 78c, 78c–3, 78c–5, 78d, 78e, 78f, 78g, 78i, 78j, 78j–1, 78k, 78k–1, 78*l,* 78m, 78n, 78n–1, 78o, 78o–4, 78o–10, 78p, 78q, 78q–1, 78s, 78u–5, 78w, 78x, 78dd, 78*ll,* 78mm, 80a–20, 80a–23, 80a–29, 80a–37, 80b–3, 80b–4, 80b–11, and 7201 *et seq.,* and 8302; 7 U.S.C. 2(c)(2)(E); 12 U.S.C. 5221(e)(3); 18 U.S.C. 1350; Pub. L. 111–203, 939A, 124 Stat. 1376 (2010); and Pub. L. 112–106, sec. 503 and 602, 126 Stat. 326 (2012), unless otherwise noted.

* * * * *

■ 7. Amend § 240.10b5–1 by:

■ a. Removing the Preliminary Note; and

■ b. Revising paragraphs (a), (b), and (c)(1).

The revisions read as follows:

§ 240.10b5–1 Trading "on the basis of" material nonpublic information in insider trading cases.

(a) *Manipulative or deceptive devices.* The ''manipulative or deceptive devices or contrivances'' prohibited by Section 10(b) of the Act (15 U.S.C. 78j) and § 240.10b–5 (Rule 10b–5) thereunder include, among other things, the purchase or sale of a security of any issuer, on the basis of material nonpublic information about that security or issuer, in breach of a duty of trust or confidence that is owed directly, indirectly, or derivatively, to the issuer of that security or the shareholders of that issuer, or to any other person who is the source of the material nonpublic information.

(b) *Awareness of material nonpublic information.* Subject to the affirmative defenses in paragraph (c) of this section, a purchase or sale of a security of an issuer is on the basis of material nonpublic information for purposes of Section 10(b) and Rule 10b–5 if the person making the purchase or sale was aware of the material nonpublic information when the person made the purchase or sale. The law of insider trading is otherwise defined by judicial opinions construing Rule 10b–5 and this section does not modify the scope of insider trading law in any other respect.

(c) *Affirmative defenses.* (1)(i) Subject to paragraph (c)(1)(ii) of this section, a person's purchase or sale is not ''on the basis of'' material nonpublic information if the person making the purchase or sale demonstrates that:

(A) Before becoming aware of the information, the person had:

(*1*) Entered into a binding contract to purchase or sell the security;

(*2*) Instructed another person to purchase or sell the security for the instructing person's account; or

(*3*) Adopted a written plan for trading securities;

(B) The contract, instruction, or plan described in paragraph (c)(1)(i)(A) of this section:

(*1*) Specified the amount of securities to be purchased or sold and the price at which and the date on which the securities were to be purchased or sold;

(*2*) Included a written formula or algorithm, or computer program, for determining the amount of securities to be purchased or sold and the price at which and the date on which the securities were to be purchased or sold; or

(*3*) Did not permit the person to exercise any subsequent influence over how, when, or whether to effect purchases or sales; provided, in addition, that any other person who, pursuant to the contract, instruction, or plan, did exercise such influence must not have been aware of the material nonpublic information when doing so; and

(C) The purchase or sale that occurred was pursuant to the contract, instruction, or plan. A purchase or sale is not ''pursuant to a contract, instruction, or plan'' if, among other things, the person who entered into the contract, instruction, or plan altered or deviated from the contract, instruction, or plan to purchase or sell securities (whether by changing the amount, price, or timing of the purchase or sale) or entered into or altered a corresponding or hedging transaction or position with respect to those securities.

(ii) Paragraph (c)(1)(i) of this section is applicable only when:

(A) The contract, instruction, or plan to purchase or sell securities was given or entered into and operated in good faith and not as part of a plan or scheme to evade the prohibitions of this section;

(B) If the person who entered into the contract, instruction, or plan is a director or officer (as defined in § 240.16a–1(f) (Rule 16a–1(f)) of the issuer, no purchases or sales occur until expiration of a cooling-off period of at least 120 days after the date of the adoption of the contract, instruction, or plan; if the person who entered into the contract, instruction, or plan is the issuer of the securities, no purchases or sales occur until expiration of a cooling-off period of at least 30 days after the date of the adoption of the contract, instruction, or plan;

(C) If the person who entered into the contract, instruction, or plan is a director or officer (as defined in Rule 16a–1(f) of the issuer (or a subsidiary of such issuer) of the securities, such director or officer on the date of adoption of the contract, instruction, or plan has promptly furnished to the issuer a written certification that they are not aware of any material nonpublic information about the security or issuer or any subsidiary of the issuer; and that they are adopting the contract, instruction, or plan in good faith and not as part of a plan or scheme to evade the prohibitions of this section;

Instruction 1 to paragraph (c)(1)(ii)(C). Officers and directors seeking to rely on the affirmative defense should retain a copy of the certification provided to the issuer for a period of ten years after providing such certification.

(D) The person who entered into the contract, instruction, or plan, has no outstanding (and does not subsequently enter into an additional) contract, instruction, or plan for open market purchases or sales of the same class of securities; and

(E) If the contract, instruction, or plan is designed to effect the purchase or sale of the total amount of securities as a single transaction, the person who entered into the contract, instruction, or plan has not during the prior 12-month period executed a contract, instruction, or plan that effected the purchase or sale of the total amount of securities in a single transaction.

Note 1 to paragraph (c)(1). For the purpose of this section, any modification or amendment to a prior contract, instruction, or written plan is deemed to be the termination of such prior contract, instruction, or written plan, and the adoption of a new contract, instruction, or written plan.

* * * * *

■ 8. Amend § 240.14a–101 by revising paragraph (b) introductory text of Item 7 to read as follows:

§ 240.14a–101 Schedule 14A. Information required in proxy statement.

* * * * *

Item 7. * * *

(b) The information required by Items 401, 404(a) and (b), 405, 407 and 408(b) of Regulation S–K (§§ 229.401, 229.404(a) and (b), 229.405, 229.407, and 229.408(b) of this chapter), other than the information required by:

* * * * *

■ 9. Amend § 240.16a–3 by revising paragraphs (f)(1)(i)(A) and (g)(1) to read as follows:

§ 240.16a–3 Reporting transactions and holdings.

* * * * *

(f) * * *

(1) * * *

(i) * * *

(A) Exercises and conversions of derivative securities exempt under either § 240.16b–3 or § 240.16b–6(b), dispositions by bona fide gifts exempt under § 240.16b–5, and any transaction exempt under § 240.16b–3(d), (e), or (f), (these are required to be reported on Form 4);

* * * * *

(g)(1) A Form 4 must be filed to report: All transactions not exempt from section 16(b) of the Act; all transactions exempt from section 16(b) of the Act pursuant to § 240.16b–3(d), (e), or (f); and dispositions by bona fide gifts and all exercises and conversions of derivative securities, regardless of whether exempt from section 16(b) of the Act. Form 4 must be filed before the end of the second business day following the day on which the subject transaction has been executed.

* * * * *

PART 249—FORMS, SECURITIES EXCHANGE ACT OF 1934

■ 10. The general authority citation for part 249 continues to read as follows:

Authority: 15 U.S.C. 78a *et seq.* and 7201 *et seq.*; 12 U.S.C. 5461 *et seq.*; 18 U.S.C. 1350; Sec. 953(b) Pub. L. 111–203, 124 Stat. 1904; Sec. 102(a)(3) Pub. L. 112–106, 126 Stat. 309 (2012), Sec. 107 Pub. L. 112–106, 126 Stat. 313 (2012), Sec. 72001 Pub. L. 114–94, 129 Stat. 1312 (2015), and secs. 2 and 3 Pub. L. 116–222, 134 Stat. 1063 (2020), unless otherwise noted.

* * * * *

■ 11. Amend Form 4 (referenced in § 249.104) by:

■ a. Adding new General Instruction 10; and

■ b. Adding text and two check boxes at the top of the first page immediately below the text ''Check this box if no longer subject to Section 16. Form 4 or Form 5 obligations may continue. *See* Instruction 1(b).''

The additions read as follows:

Note: The text of Form 4 does not, and this amendment will not, appear in the Code of Federal Regulations.

UNITED STATES SECURITIES AND EXCHANGE COMMISSION

Washington, DC 20549

FORM 4

* * * * *

General Instructions

* * * * *

Rule 10b5–1(c) and Non-Rule 10b5–1(c) Transaction Indication

Indicate by check mark whether a transaction was made pursuant to a contract, instruction or written plan for the purchase or sale of equity securities of the issuer that satisfies the conditions of Rule 10b5–1(c) under the Exchange Act [§ 240.10b5–1(c) of this chapter]. Provide the date of adoption of the Rule 10b5–1(c) plan in the ''Explanation of Responses'' portion of the Form.

If a transaction was made pursuant to a contract, instruction or written plan for the purchase or sale of equity securities of the issuer that did not satisfy the conditions of Rule 10b5–1(c), a reporting person may elect to check the optional non-Rule 10b5–1(c) box appearing on this Form.

* * * * *

☐ Check this box to indicate that a transaction was made pursuant to Rule 10b5–1(c). *See* Instruction 10.

☐ A reporting person may elect to check this box to indicate that a transaction was made pursuant to a contract, instruction or written plan for the purchase or sale of equity securities of the issuer that did not satisfy the conditions of Rule 10b5–1(c) under the Exchange Act. *See* Instruction 10.

* * * * *

■ 12. Amend Form 5 (referenced in § 249.105) by:

■ a. Adding new General Instruction 10; and

■ b. Adding text and two check boxes at the top of the first page immediately below the text ''Form 4 Transactions Reported''.

The additions read as follows:

Note: The text of Form 5 does not, and this amendment will not, appear in the Code of Federal Regulations.

UNITED STATES SECURITIES AND EXCHANGE COMMISSION

Washington, DC 20549

FORM 5

* * * * *

General Instructions

* * * * *

Rule 10b5–1(c) and Non-Rule 10b5–1(c) Transaction Indication

Indicate by check mark whether a transaction was made pursuant to a contract, instruction or written plan for the purchase or sale of equity securities of the issuer that satisfies the conditions of Rule 10b5–1(c) under the Exchange Act [§ 240.10b5–1(c) of this chapter]. Provide the date of adoption of the Rule 10b5–1(c) plan in the ''Explanation of Responses'' portion of the Form.

If a transaction was made pursuant to a contract, instruction or written plan for the purchase or sale of equity securities of the issuer that does not satisfy the conditions of Rule 10b5–1(c), a reporting person may elect to check the optional non-Rule 10b5–1(c) box appearing on this Form.

* * * * *

☐ Check this box to indicate that a transaction was made pursuant to Rule 10b5–1(c). *See* Instruction 10.

☐ A reporting person may elect to check this box to indicate that a transaction was made pursuant to a contract, instruction or written plan for the purchase or sale of equity securities of the issuer that did not satisfy the conditions of Rule 10b5–1(c) under the Exchange Act. *See* Instruction 10.

* * * * *

■ 13. Amend Form 20–F (referenced in § 249.220f) by adding new Item 16J to read as follows:

Note: The text of Form 20–F does not, and this amendment will not, appear in the Code of Federal Regulations.

UNITED STATES SECURITIES AND EXCHANGE COMMISSION

Washington, DC 20549

FORM 20–F

* * * * *

Item 16J. Insider trading policies

(a) Disclose whether the registrant has adopted insider trading policies and procedures governing the purchase, sale, and other dispositions of the registrant's securities by directors, senior management, and employees that are reasonably designed to promote compliance with applicable insider trading laws, rules and regulations, and listing standards. If the registrant has not adopted such policies and

procedures, explain why it has not done so.

(b) If the registrant has adopted insider trading policies and procedures, disclose such policies and procedures.

(c) Provide the disclosure required by Item 16J in an Interactive Data File as required by Rule 405 of Regulation S–T (17 CFR 232.405) in accordance with the EDGAR Filer Manual.

Instruction to Item 16J: Item 16J applies only to annual reports, and does not apply to registration statements, on Form 20–F.

* * * * *

■ 14. Amend Form 10–Q (referenced in § 249.308a) by adding paragraph (c) to Item 5 in Part II to read as follows:

Note: The text of Form 10–Q does not, and this amendment will not, appear in the Code of Federal Regulations.

UNITED STATES SECURITIES AND EXCHANGE COMMISSION

Washington, DC 20549

FORM 10–Q

* * * * *

Part II—Other Information

* * * * *

Item 5. Other Information.

* * * * *

(c) Furnish the information required by Item 408(a) of Regulation S–K (17 CFR 229.408(a)).

* * * * *

■ 15. Amend Form 10–K (referenced in § 249.310) by revising Item 10 in Part III to read as follows:

Note: The text of Form 10–K does not, and this amendment will not, appear in the Code of Federal Regulations.

UNITED STATES SECURITIES AND EXCHANGE COMMISSION

Washington, DC 20549

Form 10–K

* * * * *

Part III

* * * * *

Item 10. Directors, Executive Officers and Corporate Governance.

Furnish the information required by Items 401, 405, 406, 407(c)(3), (d)(4), (d)(5), and 408 of Regulation S–K (§ 229.401, § 229.405, § 229.406, § 229.407(c)(3), (d)(4), (d)(5), and § 229.408 of this chapter).

* * * * *

By the Commission.

Dated: January 13, 2022.

Vanessa A. Countryman,

Secretary.

[FR Doc. 2022–01140 Filed 2–14–22; 8:45 am]

BILLING CODE 8011–01–P

Reader Aids

Federal Register

Vol. 87, No. 31

Tuesday, February 15, 2022

CUSTOMER SERVICE AND INFORMATION

Federal Register/Code of Federal Regulations	
General Information, indexes and other finding aids	**202–741–6000**
Laws	**741–6000**
Presidential Documents	
Executive orders and proclamations	**741–6000**
The United States Government Manual	**741–6000**
Other Services	
Electronic and on-line services (voice)	**741–6020**
Privacy Act Compilation	**741–6050**

ELECTRONIC RESEARCH

World Wide Web

Full text of the daily Federal Register, CFR and other publications is located at: **www.govinfo.gov.**

Federal Register information and research tools, including Public Inspection List and electronic text are located at: **www.federalregister.gov.**

E-mail

FEDREGTOC (Daily Federal Register Table of Contents Electronic Mailing List) is an open e-mail service that provides subscribers with a digital form of the Federal Register Table of Contents. The digital form of the Federal Register Table of Contents includes HTML and PDF links to the full text of each document.

To join or leave, go to **https://public.govdelivery.com/accounts/USGPOOFR/subscriber/new**, enter your email address, then follow the instructions to join, leave, or manage your subscription.

PENS (Public Law Electronic Notification Service) is an e-mail service that notifies subscribers of recently enacted laws.

To subscribe, go to **http://listserv.gsa.gov/archives/publaws-l.html and select** *Join or leave the list (or change settings);* then follow the instructions.

FEDREGTOC and **PENS** are mailing lists only. We cannot respond to specific inquiries.

Reference questions. Send questions and comments about the Federal Register system to: **fedreg.info@nara.gov**

The Federal Register staff cannot interpret specific documents or regulations.

FEDERAL REGISTER PAGES AND DATE, FEBRUARY

5389–5654 1
5655–6016 2
6017–6402 3
6403–6758 4
6759–7024 7
7025–7356 8
7357–7678 9
7679–7926 10
7927–8138 11
8139–8390 14
8391–8732 15

CFR PARTS AFFECTED DURING FEBRUARY

At the end of each month the Office of the Federal Register publishes separately a List of CFR Sections Affected (LSA), which lists parts and sections affected by documents published since the revision date of each title.

3 CFR

Proclamations:
10336 6395
10337 6397
10338 6401
10339 7357

Executive Orders:
13502 (revoked by 14063) 7363
14063 7363
14064 8391

Administrative Orders:
Presidential Determinations:
Presidential Determination No. 2022–09 of Feb. 1, 2022 6759
Notices:
Notice of February 7, 2022 7677

5 CFR

Proposed Rules:
Ch. III 5409

6 CFR

5 6403

7 CFR

3 8395
210 6984
215 6984
220 6984
226 6984
460 7927
915 8139
944 8139
946 8399
3550 6761
3555 6773
5001 7367

Proposed Rules:
205 5424
985 8211
4284 8217

8 CFR

214 6017
274a 6017

10 CFR

Proposed Rules:
50 6434
429 .....5560, 6436, 6948, 7048
430 .....5742, 6786, 7396, 7758
431 .....5560, 6436, 6948, 7048

12 CFR

Proposed Rules:
701 6078

14 CFR

25 .....6017, 8143, 8145, 8147
39 .....5389, 5391, 6404, 6777, 7025, 7027, 7029, 7033, 7368, 7679, 7681, 7683, 7685, 7687, 7690, 7692, 7695, 7698, 7701, 7703, 7705, 7708, 7710, 7713, 7931, 8150, 8152, 8158, 8167, 8169, 8172, 8174, 8178, 8402, 8406
71 .....6406, 6408, 6409, 6410, 6412, 6413, 7715, 8408, 8410
97 .....6019, 6021
399 5655

Proposed Rules:
27 6437
39 .....5428, 6082, 6087, 6089, 6091, 6795, 6798, 6802, 7056, 7059, 7062, 7065, 7397, 7765, 7768, 7770, 7774, 7965, 8434, 8436, 8439
71 .....5747, 6439, 6804, 7400, 7776
183 7068
193 7968

15 CFR

734 6022
736 6022
744 .....6022, 7037, 8180
774 6022

Proposed Rules:
30 6440
Ch. VII 7777

16 CFR

1112 8640
1130 8640
1241 8640

Proposed Rules:
1112 .....6246, 8441, 8442
1260 8441
1261 6246
1262 8442

17 CFR

249 7934

Proposed Rules:
229 .....5751, 8443, 8686
232 .....8443, 8686
240 .....5751, 6652, 8443, 8686
249 .....5751, 8443, 8686
270 7248
274 .....7248, 8443

18 CFR

12 8411
381 5659

20 CFR

641 8186
655 6017

Proposed Rules:

220 6094
641 8218

21 CFR

1 5660
866 6415
870 ....6417, 8190
878 6419
880 ....6422, 8192

Proposed Rules:

10 6708
12 6708
16 6708
73 8222
203 ....6443, 6449
205 6708

22 CFR

Proposed Rules:

120 5759
126 5759
127 5759

24 CFR

14 8194
17 8194
20 8194
26 8194
28 8194
30 8194
81 8194
103 8194
180 8194
570 8194

23 CFR

1 8411

27 CFR

5 7526
7 7526

28 CFR

523 7938

29 CFR

2702 5393

31 CFR

501 7369
510 7369
535 7369
536 7369
539 7369
541 7369
542 7369
544 7369
546 7369
547 7369
548 7369
549 7369
550 7374
551 7369
552 7369
554 7943
560 7369
561 7369
566 7369
576 7369
583 7369
584 7369
588 7369
590 7369
592 7369
594 7369
597 7369
598 7369

Proposed Rules:

Ch. X 7068

32 CFR

313 7944

33 CFR

Ch. I 7716
Subchapter N 7716
100 ....6026, 7716, 8413
117 ....5401, 7945
127 5660
165 ....6031, 7042, 7382, 7384, 7946, 8413, 8416

Proposed Rules:

100 5430
165 ....6450, 8472

34 CFR

Proposed Rules:

Ch. III 5432

36 CFR

7 5402
251 7947
1155 5692
1195 6037

37 CFR

Proposed Rules:

201 6452
202 6452

38 CFR

1 5693
3 6038
17 6425
21 6427

Proposed Rules:

3 8474
4 ....8474, 8498
17 6456
38 7402

39 CFR

3040 6428

40 CFR

49 7718
52 ....7069, 7387, 7722, 7725, 7728, 8418
60 8197
62 8197
63 8197
80 5696
81 7734
180 ....5703, 5709, 6039, 6779, 7388, 7950, 7953

Proposed Rules:

52 ....5435, 5438, 5761, 6095, 6806, 7042, 7071, 7404, 7410, 7779, 7784, 7786, 7788, 7970, 7978, 8222
55 7790
63 ....6466, 7624
81 ....5438, 6806, 7978
87 6324
141 7412
171 6821
271 5450
1030 6324
1031 6324

41 CFR

102–35 6042
102–37 6042
102–77 5711

42 CFR

403 7746
405 7746
410 7746
411 7746
414 7746
415 7746
423 7746
424 7746
425 7746

43 CFR

2 8427

45 CFR

1167 8428
1173 8430

46 CFR

10 7716
11 7716
15 7716
107 7716

Proposed Rules:

Ch. 4 8506
Subch. B 8506

47 CFR

25 7748
54 ....8205, 8346
64 ....7044, 7955
73 ....6043, 7045, 7748
76 7748

Proposed Rules:

8 6827
11 7413
54 8385
73 ....6100, 6473, 8509

48 CFR

332 5717
352 5717
501 7393
502 7393
511 7393
538 6044
539 7393
552 ....6044, 7393
570 7393

49 CFR

219 5719
383 6045
391 7756
571 ....7956, 7964
659 6783

50 CFR

17 ....5737, 6046, 6063
300 7964
635 ....5737, 8432
648 ....5405, 5739, 7046
679 ....7756, 8433

Proposed Rules:

17 ....5767, 6101, 6118, 7077, 8509
20 5946
216 6474
300 6474
648 8543
665 6479
660 8224

LIST OF PUBLIC LAWS

Note: No public bills which have become law were received by the Office of the Federal Register for inclusion in today's **List of Public Laws**.

Last List February 4, 2022

Public Laws Electronic Notification Service (PENS)

PENS is a free email notification service of newly enacted public laws. To subscribe, go to *https://listserv.gsa.gov/cgi-bin/wa.exe?SUBED1=PUBLAWS-L&A=1*

Note: This service is strictly for email notification of new laws. The text of laws is not available through this service. **PENS** cannot respond to specific inquiries sent to this address.