AUTHENTICATED
U.S. GOVERNMENT
INFORMATION
GPO

FEDERAL REGISTER

Vol. 87 Friday

No. 14 January 21, 2022

Pages 3175–3420

OFFICE OF THE FEDERAL REGISTER

The **FEDERAL REGISTER** (ISSN 0097–6326) is published daily, Monday through Friday, except official holidays, by the Office of the Federal Register, National Archives and Records Administration, under the Federal Register Act (44 U.S.C. Ch. 15) and the regulations of the Administrative Committee of the Federal Register (1 CFR Ch. I). The Superintendent of Documents, U.S. Government Publishing Office, is the exclusive distributor of the official edition. Periodicals postage is paid at Washington, DC.

The **FEDERAL REGISTER** provides a uniform system for making available to the public regulations and legal notices issued by Federal agencies. These include Presidential proclamations and Executive Orders, Federal agency documents having general applicability and legal effect, documents required to be published by act of Congress, and other Federal agency documents of public interest.

Documents are on file for public inspection in the Office of the Federal Register the day before they are published, unless the issuing agency requests earlier filing. For a list of documents currently on file for public inspection, see *www.federalregister.gov.*

The seal of the National Archives and Records Administration authenticates the Federal Register as the official serial publication established under the Federal Register Act. Under 44 U.S.C. 1507, the contents of the **Federal Register** shall be judicially noticed.

The **Federal Register** is published in paper and on 24x microfiche. It is also available online at no charge at *www.govinfo.gov*, a service of the U.S. Government Publishing Office.

The online edition of the **Federal Register** is issued under the authority of the Administrative Committee of the Federal Register as the official legal equivalent of the paper and microfiche editions (44 U.S.C. 4101 and 1 CFR 5.10). It is updated by 6:00 a.m. each day the **Federal Register** is published and includes both text and graphics from Volume 1, 1 (March 14, 1936) forward. For more information, contact the GPO Customer Contact Center, U.S. Government Publishing Office. Phone 202-512-1800 or 866-512-1800 (toll free). E-mail, *gpocusthelp.com.*

The annual subscription price for the **Federal Register** paper edition is $860 plus postage, or $929, for a combined **Federal Register, Federal Register** Index and List of CFR Sections Affected (LSA) subscription; the microfiche edition of the **Federal Register** including the **Federal Register** Index and LSA is $330, plus postage. Six month subscriptions are available for one-half the annual rate. The prevailing postal rates will be applied to orders according to the delivery method requested. The price of a single copy of the daily **Federal Register,** including postage, is based on the number of pages: $11 for an issue containing less than 200 pages; $22 for an issue containing 200 to 400 pages; and $33 for an issue containing more than 400 pages. Single issues of the microfiche edition may be purchased for $3 per copy, including postage. Remit check or money order, made payable to the Superintendent of Documents, or charge to your GPO Deposit Account, VISA, MasterCard, American Express, or Discover. Mail to: U.S. Government Publishing Office—New Orders, P.O. Box 979050, St. Louis, MO 63197-9000; or call toll free 1-866-512-1800, DC area 202-512-1800; or go to the U.S. Government Online Bookstore site, see *bookstore.gpo.gov.*

There are no restrictions on the republication of material appearing in the **Federal Register.**

How To Cite This Publication: Use the volume number and the page number. Example: 87 FR 12345.

Postmaster: Send address changes to the Superintendent of Documents, Federal Register, U.S. Government Publishing Office, Washington, DC 20402, along with the entire mailing label from the last issue received.

SUBSCRIPTIONS AND COPIES

PUBLIC

Subscriptions:

Paper or fiche	**202–512–1800**
Assistance with public subscriptions	**202–512–1806**

General online information **202–512–1530; 1–888–293–6498**

Single copies/back copies:

Paper or fiche	**202–512–1800**
Assistance with public single copies	**1–866–512–1800 (Toll-Free)**

FEDERAL AGENCIES

Subscriptions:

Assistance with Federal agency subscriptions:

Email	*FRSubscriptions@nara.gov*
Phone	**202–741–6000**

The Federal Register Printing Savings Act of 2017 (Pub. L. 115-120) placed restrictions on distribution of official printed copies of the daily **Federal Register** to members of Congress and Federal offices. Under this Act, the Director of the Government Publishing Office may not provide printed copies of the daily **Federal Register** unless a Member or other Federal office requests a specific issue or a subscription to the print edition. For more information on how to subscribe use the following website link: *https://www.gpo.gov/frsubs.*

Printed on recycled paper.

Contents

Federal Register

Vol. 87, No. 14

Friday, January 21, 2022

Agriculture Department
See Forest Service

Alcohol, Tobacco, Firearms, and Explosives Bureau
NOTICES
Agency Information Collection Activities; Proposals, Submissions, and Approvals:
Office of Strategic Management Environmental Assessment Outreach, 3334–3335

Bonneville Power Administration
NOTICES
Bonneville Purchasing Instructions and Bonneville Financial Assistance Instructions; Availability, 3289–3290

Centers for Medicare & Medicaid Services
NOTICES
Agency Information Collection Activities; Proposals, Submissions, and Approvals, 3301–3302

Civil Rights Commission
NOTICES
Meetings:
Connecticut Advisory Committee, 3279
Kansas Advisory Committee, 3279–3280
Meetings; Sunshine Act, 3279

Coast Guard
RULES
Navigation and Navigable Waters, and Shipping, 3217–3225

Commerce Department
See National Oceanic and Atmospheric Administration
NOTICES
Identification of Federal Financial Assistance Infrastructure Programs Subject to the Build America, Buy America Provisions: of the Infrastructure Investment and Jobs Act, 3280
Tribal Consultation Policy and Procedures, 3280–3281

Committee for Purchase From People Who Are Blind or Severely Disabled
NOTICES
Procurement List; Additions and Deletions, 3285–3286

Defense Department
See Engineers Corps

Drug Enforcement Administration
NOTICES
Decision and Order:
Alex E. Torres, MD, 3352–3354
Daniel R. Nevarre, MD, 3340–3343
Stephen E. Owusu, DPM, 3343–3352
Exempt Chemical Preparations under the Controlled Substances Act, 3335–3340

Energy Department
See Bonneville Power Administration
See Federal Energy Regulatory Commission
PROPOSED RULES
Energy Conservation Program:
Energy Conservation Standards for Miscellaneous Refrigeration Products, Availability of the Preliminary Technical Support Document, 3229–3236
NOTICES
Agency Information Collection Activities; Proposals, Submissions, and Approvals:
Aircraft Services; Flight Request, 3291
Realty; Application for Proposed Use of Right-of-Way, 3290

Engineers Corps
PROPOSED RULES
Restricted Area:
Eagle River from Bravo Bridge to Eagle Bay in Knik Arm, Richardson Training Area on Joint Base Elmendorf-Richardson, AK, 3257–3259
NOTICES
Requests for Nominations:
Stakeholder Representative Members of the Committee on Levee Safety, 3286–3289

Environmental Protection Agency
PROPOSED RULES
Air Quality State Implementation Plans; Approvals and Promulgations:
Delaware; Philadelphia Area 2017 Base Year Inventory for the Ozone National Ambient Air Quality Standard, 3259–3262
NOTICES
Broadly Applicable Alternative Test Methods, 3296–3298
Environmental Impact Statements; Availability, etc., 3298
Meetings:
Science Advisory Committee on Chemicals; Toxic Substances Control Act Screening Level Approach for Assessing Ambient Air and Water Exposures to Fenceline Communities, 3294–3296

Federal Aviation Administration
RULES
Airworthiness Directives:
Bombardier, Inc., Airplanes, 3184–3188
General Electric Company Turbofan Engines, 3182–3184
Pilatus Aircraft Ltd. Airplanes, 3188–3190
Various Restricted Category Helicopters, 3176–3182
PROPOSED RULES
Airworthiness Directives:
Bell Textron Inc. Helicopters, 3244–3246
Leonardo S.p.a. Helicopters, 3241–3244
The Boeing Company Airplanes, 3246–3250
Viking Air Limited (Type Certificate Previously Held by Bombardier Inc. and de Havilland, Inc.) Airplanes, 3236–3241
NOTICES
Release of Airport Property for Land Disposal, 3377–3378

Federal Communications Commission
RULES
Television Broadcasting Services:
Fort Bragg, CA, 3226–3227

Henderson, NV, 3227–3228
NOTICES
Agency Information Collection Activities; Proposals, Submissions, and Approvals, 3298–3300

Federal Energy Regulatory Commission
RULES
Use of Government Lands by Hydropower Licensees: Annual Update to Fee Schedule, 3190–3203
NOTICES
Application:
Georgia Power Co., 3293–3294
Combined Filings, 3293–3294
Request under Blanket Authorization:
Columbia Gas Transmission, LLC, 3291–3293

Federal Maritime Commission
NOTICES
Agreement Filed, 3300

Federal Motor Carrier Safety Administration
RULES
Qualification of Drivers:
Vision Standard, 3390–3419

Fish and Wildlife Service
NOTICES
Permits, Applications, Issuances, etc.:
Habitat Conservation Plan for Warm Springs Natural Area and Hidden Valley Property, Clark County, NV, 3326–3327

Food and Drug Administration
RULES
Medical Devices:
Ophthalmic Devices; Classification of the Retinal Diagnostic Software Device, 3203–3205
PROPOSED RULES
Medical Devices:
Immunology and Microbiology Devices; Classification of Human Leukocyte, Neutrophil and Platelet Antigen and Antibody Tests, 3250–3257
NOTICES
Emergency Use Authorization:
In Vitro Diagnostic Devices for Detection and/or Diagnosis of COVID–19; Revocation, 3306–3313
Guidance:
Collecting and Providing Portions of Official Samples, 3302–3303
Coronavirus Disease 2019, 3303–3306

Foreign Assets Control Office
RULES
Applicable Schedule Amount, 3206–3207
Transnational Criminal Organizations Sanctions, 3207–3217

Forest Service
NOTICES
Land Management Plan:
Nantahala and Pisgah National Forests, NC; Revision, 3278–3279

Health and Human Services Department
See Centers for Medicare & Medicaid Services
See Food and Drug Administration
See Health Resources and Services Administration
NOTICES
Annual Update of the Health and Human Services Poverty Guidelines, 3315–3316
Meetings:
National Vaccine Advisory Committee, 3316–3317
Tick-Borne Disease Working Group, 3314
National Advisory Committee on Children and Disasters, 3314–3315

Health Resources and Services Administration
NOTICES
Agency Information Collection Activities; Proposals, Submissions, and Approvals:
Maternal and Child Health Bureau Performance Measures for Discretionary Grant Information System, 3313–3314

Homeland Security Department
See Coast Guard
See U.S. Citizenship and Immigration Services
NOTICES
Science, Technology, Engineering, or Mathematics Designated Degree Program List, 3317–3321

Housing and Urban Development Department
NOTICES
Agency Information Collection Activities; Proposals, Submissions, and Approvals:
Eviction Protection Grant Program, 3323–3324
Medical Exception or Delay to Covid Vaccination Requirement, 3324–3325
Section 3 Sample Certification Forms, 3322–3323
Section 3 Sample Utilization Plans, 3325–3326

Interior Department
See Fish and Wildlife Service
See Land Management Bureau
See National Park Service
See Office of Natural Resources Revenue

International Trade Commission
NOTICES
Antidumping or Countervailing Duty Investigations, Orders, or Reviews:
Sodium Nitrite from India and Russia, 3333–3334
Investigations; Determinations, Modifications, and Rulings, etc.:
Certain Refrigerator Water Filtration Devices and Components Thereof, 3331–3333

Justice Department
See Alcohol, Tobacco, Firearms, and Explosives Bureau
See Drug Enforcement Administration

Labor Department
See Labor Statistics Bureau
See Mine Safety and Health Administration
See Occupational Safety and Health Administration
NOTICES
Agency Information Collection Activities; Proposals, Submissions, and Approvals:
Request for Information on Earnings, Dual Benefits, Dependents and Third Party Settlement, 3355
Review Financial Assistance and the Requirements of Buy America, 3354

Labor Statistics Bureau
NOTICES
Agency Information Collection Activities; Proposals, Submissions, and Approvals, 3355–3356

Land Management Bureau
NOTICES
Environmental Assessments; Availability, etc.:
Intent to Amend the 1995 Florida Resource Management Plan, 3328–3329

Merit Systems Protection Board
RULES
Civil Monetary Penalty Inflation Adjustment, 3175–3176

Millennium Challenge Corporation
NOTICES
Compact with the Republic of Niger:
First Amendment, 3361–3363

Mine Safety and Health Administration
NOTICES
Agency Information Collection Activities; Proposals, Submissions, and Approvals:
Explosive Materials and Blasting Units (Pertains only to Underground Metal and Category III Nonmetal Mines Deemed to be Gassy), 3356–3357
Training Plans, New Miner Training, Newly-Hired Experienced Miner Training, 3357–3358

National Aeronautics and Space Administration
NOTICES
Meetings:
Planetary Science Advisory Committee, 3363

National Highway Traffic Safety Administration
NOTICES
Petition for Decision of Inconsequential Noncompliance:
Hankook Tire America Corp.; Approval, 3378–3380
Toyota Motor North America, Inc.; Approval, 3382–3384
Volkswagen Group of America, Inc.; Approval, 3380–3382

National Oceanic and Atmospheric Administration
PROPOSED RULES
Pacific Island Fisheries:
Amendment 5 to the Fishery Ecosystem Plan for the American Samoa Archipelago; American Samoa Bottomfish Fishery Rebuilding Plan, 3276–3277
Taking or Importing of Marine Mammals:
Russian River Estuary Management Activities, 3262–3276
NOTICES
Permits:
Marine Mammals, 3281–3283
Review of Nominations:
Hudson Canyon National Marine Sanctuary, 3283–3284
Mariana Trench National Marine Sanctuary, 3284–3285

National Park Service
NOTICES
Agency Information Collection Activities; Proposals, Submissions, and Approvals:
Nomination of Properties for Listing in the National Register of Historic Places, 3329–3330

National Science Foundation
NOTICES
Identification of Federal Financial Assistance Infrastructure Programs Subject to the Build America, Buy America Provisions of the Infrastructure Investment and Jobs Act, 3365–3367
Meetings:
Proposal Review Panel for Materials Research, 3363–3365, 3367–3371
Meetings; Sunshine Act, 3371–3372

Nuclear Regulatory Commission
NOTICES
Licenses; Exemptions, Applications, Amendments etc.:
Zion Nuclear Power Station, Units 1 and 2, Three Mile Island Nuclear Station, Unit 2, La Crosse Boiling Water Reactor, et al., 3372–3375
Meetings; Sunshine Act, 3372

Occupational Safety and Health Administration
NOTICES
Nationally Recognized Testing Laboratories:
MET Laboratories, Inc.; Applications for Expansion of Recognition, 3358–3359
Requests for Nominations:
Advisory Committee on Construction Safety and Health, 3359–3360

Office of Natural Resources Revenue
NOTICES
Agency Information Collection Activities; Proposals, Submissions, and Approvals:
Royalty and Production Reporting, 3330–3331

Securities and Exchange Commission
NOTICES
Meetings; Sunshine Act, 3375–3376

State Department
NOTICES
Imposition of Missile Proliferation Sanctions:
Three Entities in the People's Republic of China, 3376
Waiver of Missile Proliferation Sanctions against Foreign Persons, 3376

Surface Transportation Board
NOTICES
Exemption:
Continuance in Control; Watco Holdings, Inc., Verdigris Southern Railroad, LLC, 3377
Lease and Operation; Verdigris Southern Railroad, LLC, Track in Rogers County, OK, 3376–3377

Transportation Department
See Federal Aviation Administration
See Federal Motor Carrier Safety Administration
See National Highway Traffic Safety Administration

Treasury Department
See Foreign Assets Control Office
NOTICES
Agency Information Collection Activities; Proposals, Submissions, and Approvals:
Equal Employment Opportunity Complaint Forms, 3384–3385
Federal Financial Assistance Infrastructure Programs Subject to the Build America, Buy America Provisions of the Infrastructure Investment and Jobs Act, 3385–3388

U.S. Citizenship and Immigration Services
NOTICES
Agency Information Collection Activities; Proposals, Submissions, and Approvals:
H–1B Registration Tool, 3321–3322

Veterans Affairs Department
RULES
Civil Monetary Penalty Inflation Adjustment, 3225–3226
NOTICES
Agency Information Collection Activities; Proposals, Submissions, and Approvals:
Advertising, Sales, Enrollment Materials, and Candidate Handbooks, 3388

Separate Parts In This Issue

Part II
Transportation Department, Federal Motor Carrier Safety Administration, 3390–3419

Reader Aids

Consult the Reader Aids section at the end of this issue for phone numbers, online resources, finding aids, and notice of recently enacted public laws.

To subscribe to the Federal Register Table of Contents electronic mailing list, go to https://public.govdelivery.com/accounts/USGPOOFR/subscriber/new, enter your e-mail address, then follow the instructions to join, leave, or manage your subscription.

CFR PARTS AFFECTED IN THIS ISSUE

A cumulative list of the parts affected this month can be found in the Reader Aids section at the end of this issue.

5 CFR
1201 3175

10 CFR
Proposed Rules:
430 3229

14 CFR
39 (4 documents) ...3176, 3182, 3184, 3188
Proposed Rules:
39 (5 documents) ...3236, 3238, 3241, 3244, 3246

18 CFR
11 3190

21 CFR
886 3203
Proposed Rules:
866 3250

31 CFR
501 3206
590 3207

33 CFR
1 3217
6 3217
62 3217
151 3217
160 3217
173 3217
Proposed Rules:
334 3257

38 CFR
36 3225
42 3225

40 CFR
Proposed Rules:
52 3259

46 CFR
4 3217
5 3217
7 3217
11 3217
13 3217
15 3217
31 3217
67 3217
71 3217
91 3217
107 3217
126 3217
144 3217
147 3217
172 3217
189 3217

47 CFR
73 (2 documents) 3226, 3227

49 CFR
391 3390

50 CFR
Proposed Rules:
217 3262
665 3276

Rules and Regulations

Federal Register
Vol. 87, No. 14
Friday, January 21, 2022

This section of the FEDERAL REGISTER contains regulatory documents having general applicability and legal effect, most of which are keyed to and codified in the Code of Federal Regulations, which is published under 50 titles pursuant to 44 U.S.C. 1510.

The Code of Federal Regulations is sold by the Superintendent of Documents.

MERIT SYSTEMS PROTECTION BOARD

5 CFR Part 1201

Civil Monetary Penalty Inflation Adjustment

AGENCY: Merit Systems Protection Board.

ACTION: Final rule.

SUMMARY: This final rule adjusts the level of civil monetary penalties (CMPs) in regulations maintained and enforced by the Merit Systems Protection Board (MSPB) with an annual adjustment under the Federal Civil Penalties Inflation Adjustment Act Improvements Act of 2015 (the 2015 Act) and Office of Management and Budget (OMB) guidance.

DATES: This final rule is effective on January 21, 2022.

FOR FURTHER INFORMATION CONTACT: Jennifer Everling, Acting Clerk of the Board, Merit Systems Protection Board, 1615 M Street NW, Washington, DC 20419; phone: (202) 653–7200; Fax: (202) 653–7130; or email: *mspb@mspb.gov.*

SUPPLEMENTARY INFORMATION:

I. Background

The Federal Civil Penalties Inflation Adjustment Act of 1990 (the 1990 Act), Public Law 101–410, provides for the regular evaluation of CMPs by Federal agencies. Periodic inflationary adjustments of CMPs ensure that the consequences of statutory violations adequately reflect the gravity of such offenses and that CMPs are properly accounted for and collected by the Federal Government. In April 1996, the 1990 Act was amended by the Debt Collection Improvement Act of 1996 (the 1996 Act), Public Law 104–134, requiring Federal agencies to adjust their CMPs at least once every four years. However, because inflationary adjustments to CMPs were statutorily capped at ten percent of the maximum penalty amount, but only required to be calculated every four years, CMPs in many cases did not correspond with the true measure of inflation over the preceding four-year period, leading to a decline in the real value of the penalty. To remedy this decline, the 2015 Act (section 701 of Pub. L. 114–74) requires agencies to adjust CMP amounts with annual inflationary adjustments through a rulemaking using a methodology mandated by the legislation. The purpose of these adjustments is to maintain the deterrent effect of civil penalties.

A civil monetary penalty is ''any penalty, fine, or other sanction'' that: (1) ''is for a specific amount'' or ''has a maximum amount'' under Federal law; and (2) a Federal agency assesses or enforces ''pursuant to an administrative proceeding or a civil action in the Federal courts.'' 28 U.S.C. 2461 note.

The MSPB is authorized to assess CMPs pursuant to 5 U.S.C. 1215(a)(3) and 5 U.S.C. 7326 in disciplinary actions brought by the Special Counsel. The corresponding MSPB regulation for both CMPs is 5 CFR 1201.126(a). As required by the 2015 Act, and pursuant to guidance issued by OMB, MSPB is now making an annual adjustment for 2022, according to the prescribed formulas.

II. Calculation of Adjustment

The CMP listed in 5 U.S.C. 1215(a)(3) was established in 1978 with the enactment of the Civil Service Reform Act of 1978 (CSRA), Public Law 95–454, section 202(a), 92 Stat. 1121–30 (Oct. 13, 1978), and originally codified at 5 U.S.C. 1207(b). That CMP was last amended by section 106 of the Whistleblower Protection Enhancement Act of 2012, Public Law 112–199, 12 Stat. 1468 (Nov. 27, 2012), now codified at 5 U.S.C. 1215(a)(3), which provided for a CMP ''not to exceed $1,000.'' The CMP authorized in 5 U.S.C. 7326 was established in 2012 by section 4 of the Hatch Act Modernization Act of 2012 (Hatch Act), Public Law 112–230, 126 Stat. 1617 (Dec. 28, 2012), which provided for a CMP ''not to exceed $1,000.'' On February 2, 2021, MSPB issued a final rule which increased the maximum CMP allowed under both 5 U.S.C. 1215(a)(3) and 5 U.S.C. 7326 to $1,125 for the year 2021. *See* 86 FR 7797 (Feb. 2, 2021). This increase reflected the annual increase for the year 2021 mandated by the 2015 Act.

On December 15, 2021, OMB issued guidance on calculating the annual inflationary adjustment for 2022. *See* Memorandum from Shalanda D. Young, Acting Dir., OMB, to Heads of Executive Departments and Agencies re: Implementation of Penalty Inflation Adjustments for 2022, Pursuant to the Federal Civil Penalties Inflation Adjustment Act Improvements Act of 2015, M–22–07 (Dec. 15, 2021). Therein, OMB notified agencies that the annual adjustment multiplier for 2022, based on the Consumer Price Index for All Urban Consumers (CPI–U), is 1.06222 and that the 2022 annual adjustment amount is obtained by multiplying the 2021 penalty amount by the 2022 annual adjustment multiplier, and rounding to the nearest dollar. Therefore, the new maximum penalty under the CSRA and the Hatch Act is $1,125 × 1.06222 = $1,195.00.

III. Effective Date of Penalties

The revised CMP amounts will go into effect on January 21, 2022. All violations for which CMPs are assessed after the effective date of this rule will be assessed at the adjusted penalty level regardless of whether the violation occurred before the effective date.

IV. Procedural Requirements

A. Administrative Procedure Act

Pursuant to 5 U.S.C. 553(b), the MSPB has determined that good cause exists for waiving the general notice of proposed rulemaking and public comment procedures as to these technical amendments. The notice and comment procedures are being waived because Congress has specifically exempted agencies from these requirements when implementing the 2015 Act. The 2015 Act explicitly requires the agency to make subsequent annual adjustments notwithstanding 5 U.S.C. 553, the section of the Administrative Procedure Act that normally requires agencies to engage in notice and comment. It is also in the public interest that the adjusted rates for CMPs under the CSRA and the Hatch Act become effective as soon as possible to maintain their effective deterrent effect.

B. Regulatory Impact Analysis: E.O.12866

The MSPB has determined that this is not a significant regulatory action under E.O. 12866. Therefore, no regulatory impact analysis is required.

C. Regulatory Flexibility Act

The Regulatory Flexibility Act (RFA) requires an agency to prepare a regulatory flexibility analysis for rules unless the agency certifies that the rule will not have a significant economic impact on a substantial number of small entities. The RFA applies only to rules for which an agency is required to first publish a proposed rule. *See* 5 U.S.C. 603(a) and 604(a). As discussed above, the 2015 Act does not require agencies to first publish a proposed rule when adjusting CMPs within their jurisdiction. Thus, the RFA does not apply to this final rule.

D. Paperwork Reduction Act

This document does not contain information collection requirements subject to the Paperwork Reduction Act of 1995, Public Law 104–13 (44 U.S.C. Chapter 35).

E. Congressional Review Act

Pursuant to the Congressional Review Act (5 U.S.C. 801, *et seq.*), the Office of Information and Regulatory Affairs designated this rule as not a ''major rule'' as defined by 5 U.S.C. 804(2).

List of Subjects in 5 CFR Part 1201

Administrative practice and procedure, Civil rights, Government employees.

For the reasons set forth above, 5 CFR part 1201 is amended as follows:

PART 1201—PRACTICES AND PROCEDURES

■ 1. The authority citation for part 1201 continues to read as follows:

Authority: 5 U.S.C. 1204, 1305, and 7701, and 38 U.S.C. 4331, unless otherwise noted.

§ 1201.126 [Amended]

■ 2. Section 1201.126 is amended in paragraph (a) by removing ''$1,125'' and adding in its place ''$1,195.''

Jennifer Everling,

Acting Clerk of the Board.

[FR Doc. 2022–01122 Filed 1–20–22; 8:45 am]

BILLING CODE 7401–01–P

DEPARTMENT OF TRANSPORTATION

Federal Aviation Administration

14 CFR Part 39

[Docket No. FAA–2021–0189; Project Identifier AD–2020–00645–R; Amendment 39–21875; AD 2021–26–16]

RIN 2120–AA64

Airworthiness Directives; Various Restricted Category Helicopters

AGENCY: Federal Aviation Administration (FAA), DOT.

ACTION: Final rule.

SUMMARY: The FAA is adopting a new airworthiness directive (AD) for certain type certificated Model UH–1H restricted category helicopters. This AD was prompted by multiple reports of failure of the main driveshaft. This AD requires establishing a limit to replace certain main driveshafts, and a one-time and repetitive inspections of the main driveshafts. The FAA is issuing this AD to address the unsafe condition on these products.

DATES: This AD is effective February 25, 2022.

The Director of the Federal Register approved the incorporation by reference of certain publications listed in this AD as of February 25, 2022.

ADDRESSES: For service information identified in this final rule, contact U.S. Army Materiel Command Logistics Data Analysis Center (USAMC LDAC), ATTN: Equipment Publication Control Officers (EPCOs), Building 3305, Redeye Road, Redstone Arsenal, AL 35898–7466; telephone (256) 955–7716 or 1–866–211–3367; email *usarmy.redstone.ldac.mbx.logetm@mail.mil;* or at *https://enterprise.armyerp.army.mil.*

You may also contact the following as applicable:

Arrow Falcon Exporters Inc., 2081 S Wildcat Way, Porterville, CA 93257; telephone (559) 781–8604; fax (559) 781–9271; email *afe@arrowfalcon.com.*

Global Helicopter Technology, Inc., P.O. Box 180681, Arlington, Texas 76096; telephone (817) 557–3391; email *ghti@ghti.net.*

Hagglund Helicopters, LLC, 5101 NW A Avenue, Pendleton, OR 97801; telephone (800) 882–3554 or (541) 276–3554; fax (541) 276–1597.

JASPP Engineering Services, LLC., 511 Harmon Terrace, Arlington, TX 76010; telephone (817) 465–4495; or at *www.jjaspp.com.*

Northwest Rotorcraft, LLC, 1000 85th Ave. SE, Olympia, WA 98501; telephone (360) 754–7200; or at *www.nwhelicopters.com.*

Overseas Aircraft Support, Inc., P.O. Box 898, Lakeside, AZ 85929; telephone (928) 368–6965; fax (928) 368–6962.

Richards Heavylift Helo, Inc., 1181 Osprey Nest Point, Orange Park, FL 32073; (904) 472–1481; email *Glenn7444@msn.com.*

Rotorcraft Development Corporation, P.O. Box 430, Corvallis, MT 59828; telephone (207) 329–2518; email *administration@rotorcraftdevelopment.com.*

Southwest Florida Aviation International, Inc., 28000–A9 Airport Road, Bldg. 101, Punta Gorda, FL 33982–9587; telephone (941) 637–1161; fax (941) 637–6264; email *info@swfateam.org.*

Tamarack Helicopters, Inc., 2849 McIntyre Rd., Stevensville, MT 59870; telephone (406) 777–0144; or at *www.tamarackhelicopters.com.*

You may view the service information at the FAA, Office of the Regional Counsel, Southwest Region, 10101 Hillwood Pkwy., Room 6N–321, Fort Worth, TX 76177. For information on the availability of this material at the FAA, call (817) 222–5110. Service information that is incorporated by reference is also available at *https://www.regulations.gov* by searching for and locating Docket No. FAA–2021–0189.

Examining the AD Docket

You may examine the AD docket at *https://www.regulations.gov* by searching for and locating Docket No. FAA–2021–0189; or in person at Docket Operations between 9 a.m. and 5 p.m., Monday through Friday, except Federal holidays. The AD docket contains this final rule, any comments received, and other information. The address for Docket Operations is U.S. Department of Transportation, Docket Operations, M–30, West Building Ground Floor, Room W12–140, 1200 New Jersey Avenue SE, Washington, DC 20590.

FOR FURTHER INFORMATION CONTACT: Ameet Shrotriya, Aerospace Engineer, Delegation Oversight Section, DSCO Branch, Compliance & Airworthiness Division, FAA, 10101 Hillwood Pkwy., Fort Worth, TX 76177; telephone (817) 222–5525; email *ameet.shrotriya@faa.gov.*

SUPPLEMENTARY INFORMATION:

Background

The FAA issued a notice of proposed rulemaking (NPRM) to amend 14 CFR part 39 by adding an AD that would apply to restricted category Model UH–1H helicopters with KAflex main driveshaft part number (P/N) SKCP2180–1, SKCP2281–1,

SKCP2281–1R, or SKCP2281–103 installed. The NPRM published in the **Federal Register** on March 26, 2021 (86 FR 16126). The NPRM was prompted by multiple reports of failure of a main driveshaft. In the NPRM, the FAA proposed to require establishing a life limit for those part-numbered main driveshafts, removing and inspecting the main driveshaft, inspecting the alignment of the main driveshaft installation, and repetitive inspections of the main driveshaft. As an optional terminating action, the NPRM proposed to allow the installation of a certain part-numbered main driveshaft not affected by this unsafe condition. This condition, if not addressed, could result in loss of engine power to the transmission and subsequent loss of control of the helicopter.

Discussion of Final Airworthiness Directive

Comments

The FAA received comments from seven commenters. The commenters were Kamatics Corporation; Northwest Helicopters, LLC; Salmon River Helicopters; and four individuals. The following presents the comments received on the NPRM and the FAA's response to each comment.

Request Regarding the FAA's Justification of the Unsafe Condition

Salmon River Helicopters and two individual commenters requested information about the driveshaft failures and one individual commenter asked if the issue is unsafe.

The FAA utilized the FAA's Service Difficulty Reporting System (SDRS) database,[1] the National Transportation Safety Board (NTSB) database,[2] [3] manufacturer reports of failures, and other sources to identify seven failures. The seven failures are: 891 Total hours time-in-service (TIS) of the main driveshaft, 1997, source: NTSB Accident Number SEA97LA126; time in service not identified, 2005, source: FAA Service Difficult Report Unique Control #2005FA0000785; 3341 total hours TIS of the main driveshaft, 2007, source: Manufacturer; 2432 total hours TIS of the main driveshaft, 2010, source: Manufacturer; 7598.6 total hours TIS since last inspection, 2015, source NTSB Accident Number WPR15LA178; 4353 total hours TIS of the main driveshaft, 2016, source: Manufacturer; and time in service not identified, 2020, source: Australian Transport Safety Bureau. Based on recent review of collected data, which factored in the usage of the main driveshafts, the FAA has determined that an unsafe condition exists.

Requests Pertaining to the Applicability

An individual commenter asked for information about main driveshaft P/Ns SKCP2180–1 and SKCP2281–1R.

Main driveshaft P/Ns SKCP2180–1 and SKCP2281–1R are older P/Ns that currently have approval for installation in the domestic fleet and could be in service. Those two P/Ns are included in this AD due to design similarity and the determination that they are affected by the unsafe condition in this AD.

An individual commenter stated that National Stock Number (NSN) 615–01–072–5670 is used for both main driveshaft P/N CP2281–103, which is affected by this AD, and main driveshaft P/N SKCP3303–1, which is not affected by this AD. The commenter asked how main driveshaft P/N CP2281–103 is affected by this AD and not main driveshaft P/N SKCP3303–1 when, according to the NSN, they are built to the same standard.

An NSN is an identification label assigned to an item or a group of similar items, not limited to aircraft parts, and is used for procurement purposes in the Department of Defense (DOD) inventory. An NSN provides a common nomenclature of function, not a standard, and is used in a catalog system that is cross-compatible within multiple agencies under DOD. A P/N is assigned by the manufacturer. The applicability of this AD is narrowed down to any P/Ns that have an unsafe condition. Main driveshaft P/N SKCP3303–1 is an alternative part, and the FAA does not have information indicating that it is affected by the unsafe condition in this AD.

Requests Regarding Overhauling a Main Driveshaft

Northwest Helicopters, LLC, and an individual commenter asked if the 5,000 total hours TIS removal is a retirement life limit or an overhaul life limit. The individual commenter requested that if it is an overhaul life limit, the AD state that KAflex main driveshaft P/N SKCP2281–103 can be overhauled in accordance with the US Army, Depot Maintenance Work Requirement (DMWR) 55–1615–278.

The FAA partially agrees. The FAA agrees that a main driveshaft could be overhauled. Accordingly, the requirements proposed in paragraphs (g)(1) and (2) of the NPRM to remove the main driveshaft from service have been changed to replace the main driveshaft in this final rule. Additionally, clarification that the main driveshaft may be overhauled has been added to each instance to replace the main driveshaft in the Required Actions paragraph. The overhaul must be accomplished by following FAA-approved procedures. U.S. Army Aviation and Missile Command, DMWR for Main Drive Shaft DMWR 55–1615–278, Original Issuance, dated September 30, 2009 (DMWR 55–1615–278), specifies procedures that are not FAA-approved. The FAA disagrees with requiring DMWR 55–1615–278 to accomplish an overhaul as it requires specialized tooling to which owners/operators may not have access. Operators may, however, under the provisions of paragraph (h) of this AD, request approval of an alternative method of compliance (AMOC) to use DMWR 55–1615–278.

Kamatics Corporation stated that an older main driveshaft can be rebuilt or upgraded into main driveshaft P/N SKCP3303–1 at a lower cost than installing a new main driveshaft and requested the FAA add this alternative cost information.

The FAA agrees that some main driveshafts could be overhauled into main driveshaft P/N SKCP3303–1 and has updated the Costs of Compliance section accordingly.

Request Regarding Determining the Total Hours TIS of the Main Driveshaft

Kamatics Corporation stated that service hours for most of the fielded main driveshafts is often not known and an individual commenter asked what to do if the proof of time since new on the main drive shaft is not recorded in any aircraft logs.

The FAA recognizes that this situation could exist. In light of this, the FAA has determined to require using the helicopter's total hours TIS if the total hours TIS of the main driveshaft cannot be determined.

Request To Restrict Accomplishment of Certain AD Requirements

Kamatics Corporation requested the AD require that any main driveshaft teardown be accomplished by an FAA-approved facility. Kamatics Corporation stated that inspection for wear within critical bolt joints requires a teardown. Kamatics Corporation stated that UH–1H Technical Manual paragraph 6–24.5 of Change 13 states ''do not attempt to loosen or tighten any hardware (with respect to the drive shaft).''

The FAA disagrees. While the owner/operator may choose to have the actions

[1] *https://av-info.faa.gov/sdrx/Query.aspx.*

[2] To search for NTSB cases in 2008 and previous, go to: *https://www.ntsb.gov/Pages/AviationQuery.aspx.*

[3] To search for NTSB cases after 2008, go to: *https://data.ntsb.gov/carol-main-public/query-builder.*

required by this AD accomplished at an approved repair station, a mechanic that meets the requirements of 14 CFR part 65 subpart D is adequate to accomplish the actions required by this AD. Pertaining to paragraph 6–24.5 of the UH–1H Technical Manual, this AD does not require accomplishing the procedures specified in paragraph 6–24.5 of Headquarters, Department of the Army, Aviation Unit and Intermediate Maintenance Instructions Army Model UH–1H/V/EH–1H/X Helicopters, Technical Manual TM 55–1520–210–23–1, Change No. 42, dated April 14, 2003 (TM 55–1520–210–23–1 Change 42).

Requests Pertaining to Certain Service Information

An individual commenter requested the FAA revise the AD so actions that are required by following certain procedures in TM 55–1520–210–23–1 Change 42, would be required using Headquarters, Department of the Army, Aviation Unit and Intermediate Maintenance Instructions Army Model UH–1H/V/EH–1H/X Helicopters, Technical Manual TM 55–1520–210–23–1, Change No. 47, dated September 20, 2005 (TM 55–1520–210–23–1 Change 47), instead because TM 55–1520–210–23–1 Change 47 is the current change.

The FAA agrees to allow TM 55–1520–210–23–1 Change 47 as an option.

An individual commenter requested the FAA revise the AD to reference U.S. Army DMWR 55–1615–278 because this service information provides inspection and repair criteria for (main) driveshaft P/N SKCP2281–103 once it has been removed from the helicopter.

The FAA agrees. The FAA has reviewed this service information and added it to the Other Related Service Information section.

Request To Require Removal of Certain Part-Numbered Main Driveshafts From Service

Kamatics Corporation requested the FAA revise the AD to require removal of main driveshaft P/Ns SKCP2180–1, SKCP 2281–1, and SKCP2281–1R from service. According to Kamatics Corporation, those P/Ns were removed from service by the U.S. Army due to flex frame bolted joint deterioration.

The FAA disagrees because no data has been provided to substantiate the commenter's request.

Conclusion

The FAA reviewed the relevant data, considered any comments received, and determined that air safety requires adopting this AD as proposed. Accordingly, the FAA is issuing this AD to address the unsafe condition on these products. Except for minor editorial changes, including updating the contact information for the U.S. Army, clarifying the specific portions of TM 55–1520–210–23–1 Change 42 that are required to accomplish this Final rule, and the changes described previously, this AD is adopted as proposed in the NPRM. None of the changes will increase the economic burden on any operator.

Related Service Information Under 1 CFR Part 51

The FAA reviewed ''Figure 4–9. Engine Air Inlet Filter Installation'' on page 4–16; page 4–17; ''Figure 6–7. Transmission Positioning for Driveshaft Alignment'' on page 6–2; ''Figure 6–8. Tool Application—Use of Alignment Tool Set (T47)'' on page 6–3; and pages 6–21 through 6–24, of TM 55–1520–210–23–1 Change 42. This service information contains main driveshaft assembly figures and specifies procedures for the main driveshaft disassembly, and inspecting and correction of its alignment.

The FAA also reviewed ''Figure 4–9. Engine Air Inlet Filter Installation'' on page 4–16; page 4–17; ''Figure 6–7. Transmission Positioning for Driveshaft Alignment'' on page 6–2; ''Figure 6–8. Tool Application—Use of Alignment Tool Set (T47)'' on page 6–3; pages 6–21 through 6–24; and ''Figure 6–12.2. Main Driveshaft Installation & Removal Tool'' and ''Figure 6–12.3. Work Aid Tool Installed on Main Driveshaft'' on page 6–27, of TM 55–1520–210–23–1 Change 47. This service information specifies the same procedures as TM 55–1520–210–23–1 Change 42 with various updates throughout.

This service information is reasonably available because the interested parties have access to it through their normal course of business or by the means identified in **ADDRESSES**.

Other Related Service Information

The FAA reviewed DMWR 55–1615–278, for main driveshaft P/N SKCP2281–103, which specifies maintenance, overhaul, repair, assembly, and balance procedures.

Costs of Compliance

The FAA estimates that this AD affects 384 helicopters of U.S. registry. Labor rates are estimated at $85 per work-hour. Based on these numbers, the FAA estimates that operators may incur the following costs in order to comply with this AD.

Determining the total hours TIS of the main driveshaft takes about 0.5 work-hour for an estimated cost of about $43 per helicopter and $16,512 for the U.S. fleet. Removing and inspecting the main driveshaft takes about 4 work-hours for an estimated cost of $340 per helicopter and $130,560 for the U.S. fleet. Inspecting the installed main driveshaft takes about 1 work-hour for an estimated cost of about $85 per helicopter and $32,640 for the U.S. fleet, per inspection cycle. Inspecting the alignment of the main driveshaft installation takes about 2 work-hours for an estimated cost of $170 per helicopter and $65,280 for the U.S. fleet. If required, adjusting the alignment takes about 0.5 work-hour for an estimated cost of $43 per instance. Replacing a main driveshaft takes about 1 work-hour and parts cost about $54,000, for an estimated cost of $54,085 per replacement. Alternatively, overhauling a main driveshaft takes about 1 work-hour for removal and reinstallation and parts cost about $38,000, for an estimated cost of $38,085 per overhaul.

Authority for This Rulemaking

Title 49 of the United States Code specifies the FAA's authority to issue rules on aviation safety. Subtitle I, section 106, describes the authority of the FAA Administrator. Subtitle VII: Aviation Programs, describes in more detail the scope of the Agency's authority.

The FAA is issuing this rulemaking under the authority described in Subtitle VII, Part A, Subpart III, Section 44701: General requirements. Under that section, Congress charges the FAA with promoting safe flight of civil aircraft in air commerce by prescribing regulations for practices, methods, and procedures the Administrator finds necessary for safety in air commerce. This regulation is within the scope of that authority because it addresses an unsafe condition that is likely to exist or develop on products identified in this rulemaking action.

Regulatory Findings

This AD will not have federalism implications under Executive Order 13132. This AD will not have a substantial direct effect on the States, on the relationship between the national government and the States, or on the distribution of power and responsibilities among the various levels of government.

For the reasons discussed above, I certify that this AD:

(1) Is not a ''significant regulatory action'' under Executive Order 12866,

(2) Will not affect intrastate aviation in Alaska, and

(3) Will not have a significant economic impact, positive or negative, on a substantial number of small entities under the criteria of the Regulatory Flexibility Act.

List of Subjects in 14 CFR Part 39

Air transportation, Aircraft, Aviation safety, Incorporation by reference, Safety.

The Amendment

Accordingly, under the authority delegated to me by the Administrator, the FAA amends 14 CFR part 39 as follows:

PART 39—AIRWORTHINESS DIRECTIVES

■ 1. The authority citation for part 39 continues to read as follows:

Authority: 49 U.S.C. 106(g), 40113, 44701.

§ 39.13 [Amended]

■ 2. The FAA amends § 39.13 by adding the following new airworthiness directive:

2021–26–16 Various Restricted Category Helicopters: Amendment 39–21875; Docket No. FAA–2021–0189; Project Identifier AD–2020–00645–R.

(a) Effective Date

This airworthiness directive (AD) is effective February 25, 2022.

(b) Affected ADs

None.

(c) Applicability

This AD applies to restricted category Model UH–1H helicopters; current type certificate holders include but are not limited to Arrow Falcon Exporters Inc.; Global Helicopter Technology, Inc.; Hagglund Helicopters, LLC; JJASPP Engineering Services, LLC.; Northwest Rotorcraft, LLC; Overseas Aircraft Support, Inc.; Richards Heavylift Helo, Inc.; Rotorcraft Development Corporation; Southwest Florida Aviation International, Inc.; and Tamarack Helicopters, Inc., with KAflex main driveshaft part number (P/N) SKCP2180–1, SKCP2281–1, SKCP2281–1R, or SKCP2281–103 installed.

Note 1 to paragraph (c): Helicopters with an SW205 designation are Southwest Florida Aviation International, Inc., Model UH–1H helicopters.

(d) Subject

Joint Aircraft System Component (JASC) Code: 6310, Engine/Transmission Coupling.

(e) Unsafe Condition

This AD was prompted by multiple reports of failure of the main driveshaft. The unsafe condition, if not addressed, could result in loss of engine power to the transmission and subsequent loss of control of the helicopter.

(f) Compliance

Comply with this AD within the compliance times specified, unless already done.

(g) Required Actions

(1) Before further flight after the effective date of this AD, determine the total hours time-in-service (TIS) of the main driveshaft. If the total hours TIS of the main driveshaft cannot be determined, use the helicopter's total hours TIS as the total hours TIS of the main driveshaft for the action required by this paragraph.

(i) If the main driveshaft has accumulated less than 5,000 total hours TIS, before exceeding 5,000 total hours TIS, replace the main driveshaft. The main driveshaft may be overhauled in accordance with FAA-approved procedures to accomplish the replacement required by this paragraph.

Note 2 to paragraph (g)(1)(i): This note applies to paragraphs (g)(1)(i) and (ii), (g)(2), and (g)(3)(i) through (iv) of this AD. U.S. Army Aviation and Missile Command, Depot Maintenance Work Requirement for Main Drive Shaft DMWR 55–1615–278, Original Issuance, dated September 30, 2009, specifies procedures that are not FAA-approved.

(ii) If the main driveshaft has accumulated 5,000 or more total hours TIS, before further flight, replace the main driveshaft. The main drive shaft may be overhauled in accordance with FAA-approved procedures to accomplish the replacement required by this paragraph.

(2) Thereafter following paragraph (g)(1) of this AD, replace the main driveshaft before accumulating 5,000 total hours TIS. The main drive shaft may be overhauled in accordance with FAA-approved procedures to accomplish the replacement required by this paragraph.

(3) Within 25 hours TIS after the effective date of this AD, remove main driveshaft P/N SKCP2180–1, SKCP2281–1, SKCP2281–1R, or SKCP2281–103 by following ''6–24.3. Removal—Main Driveshaft P/N SKCP2281–103'' on page 6–24, including ''4–24. Removal—Air Inlet Filters'' on page 4–17 and ''Figure 4–9. Engine Air Inlet Filter Installation'' on page 4–16, of Headquarters, Department of the Army, Aviation Unit and Intermediate Maintenance Instructions Army Model UH–1H/V/EH–1H/X Helicopters, Technical Manual TM 55–1520–210–23–1, Change No. 42, dated April 14, 2003 (TM 55–1520–210–23–1 C 42), except where instructed to ''refer to figure 6–12.2'' in TM 55–1520–210–23–1 C 42, refer to Figure 1 to the introductory text of paragraph (g)(3) of this AD, and where instructed to ''see figure 6–12.3'' in TM 55–1520–210–23–1 C 42, see Figure 2 to the introductory text of paragraph (g)(3) of this AD, and:

Note 3 to the introductory text of paragraph (g)(3): Figures 6–12.2 and 6–12.3 are missing from TM 55–1520–210–23–1 C 42.

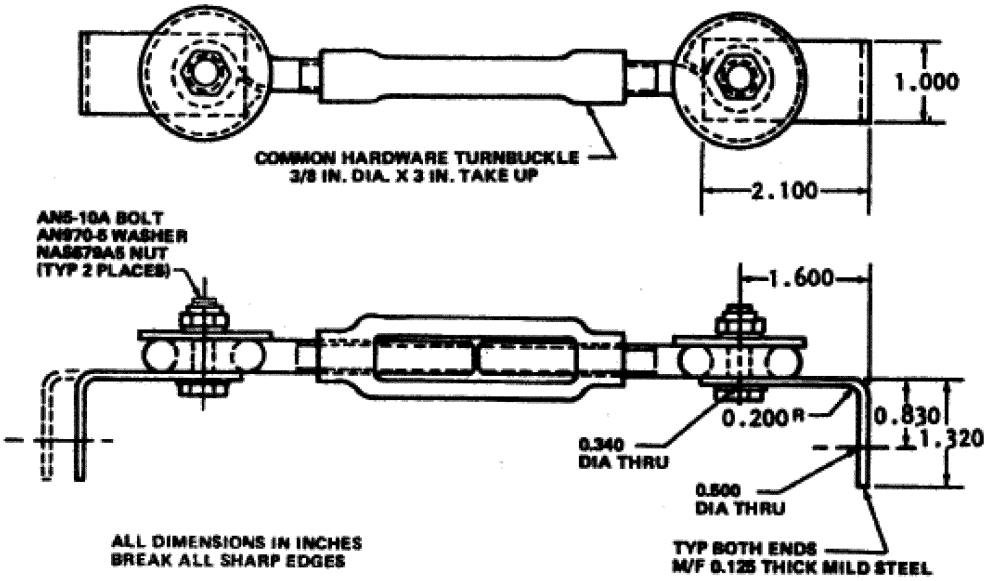

Figure 1 to the Introductory Text of Paragraph (g)(3) – Main Driveshaft Installation and Removal Tool

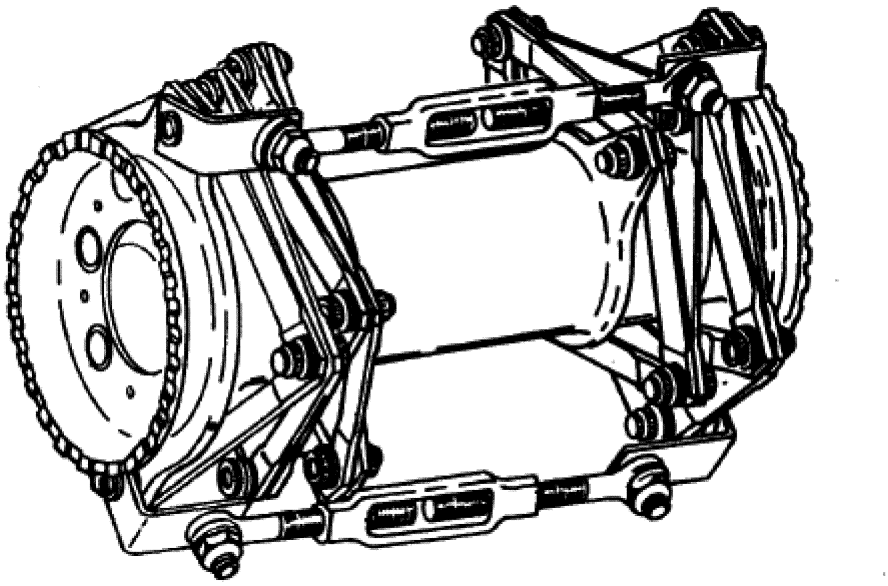

Figure 2 to the Introductory Text of Paragraph (g)(3) – Work Aid Tool Installed on Main Driveshaft

(i) Inspect for any broken, loose, or missing hardware. If there is broken or loose hardware, before further flight, remove the main driveshaft from service. If there is missing hardware, before further flight, replace the main driveshaft. The main drive shaft may be overhauled in accordance with FAA-approved procedures to accomplish the replacement required by this paragraph.

(ii) Visually inspect each flex frame and mount bolt torque stripe (red or yellow) for movement. If there is any torque stripe movement, before further flight, replace the main driveshaft. The main drive shaft may be overhauled in accordance with FAA-approved procedures to accomplish the replacement required by this paragraph.

(iii) Visually inspect each joint for fretting corrosion, which may be indicated by red metallic particles. If there is any grease, oil, or dirt covering a joint, clean the area and visually inspect again. If there is any fretting corrosion, before further flight, replace the main driveshaft. The main drive shaft may be overhauled in accordance with FAA-approved procedures to accomplish the replacement required by this paragraph.

(iv) Inspect the main driveshaft for mechanical damage, corrosion, an edge dent, and nick as shown in Figure 3 to paragraph (g)(3)(iv) of this AD. For the purposes of this inspection, mechanical damage may be indicated by a crack, scratch, or wear; and corrosion may be indicated by corrosion or pitting. If there is a scratch, wear, corrosion, pitting, an edge dent, or a nick within allowable limits, before further flight, repair the main driveshaft in accordance with FAA-approved procedures. If there is a crack, or a scratch, wear, corrosion, pitting, an edge dent, or a nick that exceeds allowable limits,

before further flight, replace the main driveshaft. The main drive shaft may be overhauled in accordance with FAA-approved procedures to accomplish the replacement required by this paragraph.

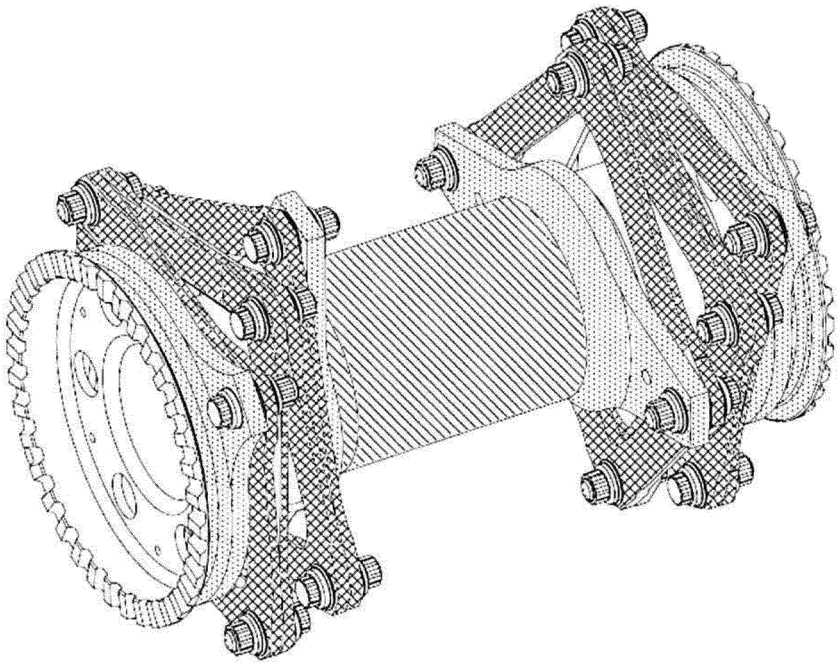

DAMAGE LOCATION SYMBOLS

Type of Damage	Maximum Damage and Repair Depth			
MECHANICAL	0.001" before and after repair	0.005" before and after repair	0.005" before and after repair	0.015" before and after repair
CORROSION	Surface, no pits	0.005" before and after repair	0.005" before and after repair	0.010" before and after repair
MAXIMUM AREA PER FULL DEPTH REPAIR	0.05 in^2	0.10 in^2	0.25 in^2	0.25 in^2
NUMBER OF REPAIRS	One per leg			
EDGE DENTS, NICKS	0.001 in	0.010 in	0.010 in	0.025 in

1. No cracks are permitted
2. Repairs must be no less than 1.000 inch apart.
3. Repairs not to be within 0.500 inches of bolt hole.
4. Faying surfaces must be free of any raised metal areas.
5. All repairs to be smooth at maximum depth and smoothly blended with surrounding surface.
6. Exposed bare metal may be touched up with Sermetel Product 1122 or 196. Zinc Chromate, primer color T, even though it does not blend cosmetically with Sermetel coating, can be used if Sermetel touch-up products are unavailable.
7. Sides and corners of flex frames are to be treated as areas.

Figure 3 to Paragraph (g)(3)(iv) – Damage Limits

(4) Before installing the main driveshaft following paragraph (g)(3) of this AD, and with the engine adapter installed in the end of the engine output shaft, inspect the alignment of the main driveshaft installation between the transmission input drive quill coupling and the engine output shaft adapter by following ''6–24. Alignment—Main Driveshaft,'' paragraphs c. through g. on pages 6–21 through 6–23, including ''Figure 6–7. Transmission Positioning for Driveshaft Alignment'' on page 6–2 (Figure 6–7), and ''Figure 6–8. Tool Application—Use of Alignment Tool Set (T47)'' on page 6–3 (Figure 6–8), of TM 55–1520–210–23–1 C 42. If there is misalignment, before further flight, adjust the alignment by following ''6–24. Alignment—Main Driveshaft,'' paragraphs h. through j. on page 6–23, including Figure 6–7 and Figure 6–8, of TM 55–1520–210–23–1 C 42.

(5) Within 300 hours TIS after the effective date of this AD, and thereafter within intervals not to exceed 300 hours TIS, with the main driveshaft installed, accomplish the actions in paragraphs (g)(3)(i) through (iv) of this AD.

(6) As an optional terminating action for the requirements of this AD, you may install KAflex main driveshaft P/N SKCP3303–1.

(7) As an option to accomplishing the actions by following the specified portions in TM 55–1520–210–23–1 C 42 in paragraphs (g)(3) and (4) of this AD, you may accomplish the actions by following those specified portions in Headquarters, Department of the Army, Aviation Unit and Intermediate Maintenance Instructions Army Model UH–1H/V/EH–1H/X Helicopters, Technical Manual TM 55–1520–210–23–1, Change No. 47, dated September 20, 2005 (TM 55–1520–210–23–1 C 47), and disregard exceptions to refer to Figure 1 and see Figure 2 to the introductory text of paragraph (g)(3) of this AD, instead refer to ''Figure 6–12.2. Main Driveshaft Installation & Removal Tool'' and see ''Figure 6–12.3. Work Aid Tool Installed on Main Driveshaft,'' on page 6–27 of TM 55–1520–210–23–1 C 47 as instructed in TM 55–1520–210–23–1 C 47.

(h) Alternative Methods of Compliance (AMOCs)

(1) The Manager, DSCO Branch, FAA, has the authority to approve AMOCs for this AD, if requested using the procedures found in 14 CFR 39.19. In accordance with 14 CFR 39.19, send your request to your principal inspector or local Flight Standards District Office, as appropriate. If sending information directly to the manager of the certification office, send it to the attention of the person identified in paragraph (i) of this AD. Information may be emailed to: *9-ASW-190-COS@faa.gov.*

(2) Before using any approved AMOC, notify your appropriate principal inspector, or lacking a principal inspector, the manager of the local flight standards district office/certificate holding district office.

(i) Related Information

For more information about this AD, contact Ameet Shrotriya, Aerospace Engineer, Delegation Oversight Section, DSCO Branch, Compliance & Airworthiness Division, FAA, 10101 Hillwood Pkwy., Fort Worth, TX 76177; telephone (817) 222–5525; email *ameet.shrotriya@faa.gov.*

(j) Material Incorporated by Reference

(1) The Director of the Federal Register approved the incorporation by reference (IBR) of the service information listed in this paragraph under 5 U.S.C. 552(a) and 1 CFR part 51.

(2) You must use this service information as applicable to do the actions required by this AD, unless the AD specifies otherwise.

(i) Headquarters, Department of the Army, Aviation Unit and Intermediate Maintenance Instructions Army Model UH–1H/V/EH–1H/X Helicopters, Technical Manual TM 55–1520–210–23–1, Change No. 42, dated April 14, 2003:

(A) ''Figure 4–9. Engine Air Inlet Filter Installation,'' page 4–16;

(B) Page 4–17;

(C) ''Figure 6–7. Transmission Positioning for Driveshaft Alignment,'' page 6–2;

(D) ''Figure 6–8. Tool Application—Use of Alignment Tool Set (T47),'' page 6–3; and

(E) Pages 6–21 through 6–24.

(ii) Headquarters, Department of the Army, Aviation Unit and Intermediate Maintenance Instructions Army Model UH–1H/V/EH–1H/X Helicopters, Technical Manual TM 55–1520–210–23–1, Change No. 47, dated September 20, 2005:

(A) ''Figure 4–9. Engine Air Inlet Filter Installation,'' page 4–16;

(B) Page 4–17;

(C) ''Figure 6–7. Transmission Positioning for Driveshaft Alignment,'' page 6–2;

(D) ''Figure 6–8. Tool Application—Use of Alignment Tool Set (T47),'' page 6–3;

(E) Pages 6–21 through 6–24; and

(F) ''Figure 6–12.2. Main Driveshaft Installation & Removal Tool'' and ''Figure 6–12.3. Work Aid Tool Installed on Main Driveshaft,'' page 6–27.

(3) For service information identified in this AD, contact U.S. Army Materiel Command Logistics Data Analysis Center (USAMC LDAC), ATTN: Equipment Publication Control Officers (EPCOs), Building 3305, Redeye Road, Redstone Arsenal, AL 35898–7466; telephone (256) 955–7716 or 1–866–211–3367; email *usarmy.redstone.ldac.mbx.logetm@mail.mil;* or at *https://enterprise.armyerp.army.mil.*

(4) You may view this service information at FAA, Office of the Regional Counsel, Southwest Region, 10101 Hillwood Pkwy., Room 6N–321, Fort Worth, TX 76177. For information on the availability of this material at the FAA, call (817) 222–5110.

(5) You may view this service information that is incorporated by reference at the National Archives and Records Administration (NARA). For information on the availability of this material at NARA, email: *fr.inspection@nara.gov,* or go to: *https://www.archives.gov/federal-register/cfr/ibr-locations.html.*

Issued on December 10, 2021.

Lance T. Gant,

Director, Compliance & Airworthiness Division, Aircraft Certification Service.

[FR Doc. 2022–00991 Filed 1–20–22; 8:45 am]

BILLING CODE 4910–13–P

DEPARTMENT OF TRANSPORTATION

Federal Aviation Administration

14 CFR Part 39

[Docket No. FAA–2021–0949; Project Identifier AD–2021–00115–E; Amendment 39–21915; AD 2022–02–18]

RIN 2120–AA64

Airworthiness Directives; General Electric Company Turbofan Engines

AGENCY: Federal Aviation Administration (FAA), DOT.

ACTION: Final rule.

SUMMARY: The FAA is adopting a new airworthiness directive (AD) for all General Electric Company (GE) CF6–80C2A1, CF6–80C2A2, CF6–80C2A3, CF6–80C2A5, CF6–80C2A5F, and CF6–80C2A8 model turbofan engines with an installed left-hand rear mount link assembly, part number (P/N) 1846M23G01. This AD was prompted by the manufacturer reducing the life limit for the affected left-hand rear mount link assembly. This AD requires revising the airworthiness limitations section (ALS) of the existing engine maintenance manual and the operator's existing approved continuous airworthiness maintenance program (CAMP). The FAA is issuing this AD to address the unsafe condition on these products.

DATES: This AD is effective February 25, 2022.

ADDRESSES: For service information identified in this final rule, contact General Electric Company, 1 Neumann Way, Cincinnati, OH 45215; phone: (513) 552–3272; email: *aviation.fleetsupport@ae.ge.com;* website: *https://www.ge.com.* You may view this service information at the FAA, Airworthiness Products Section, Operational Safety Branch, 1200 District Avenue, Burlington, MA 01803. For information on the availability of this material at the FAA, call (817) 222–5110. It is also available at *https://www.regulations.gov* by searching for and locating Docket No. FAA–2021–0949.

Examining the AD Docket

You may examine the AD docket at *https://www.regulations.gov* by searching for and locating Docket No. FAA–2021–0949; or in person at Docket Operations between 9 a.m. and 5 p.m., Monday through Friday, except Federal holidays. The AD docket contains this final rule, any comments received, and other information. The address for Docket Operations is U.S. Department of

Transportation, Docket Operations, M–30, West Building Ground Floor, Room W12–140, 1200 New Jersey Avenue SE, Washington, DC 20590.

FOR FURTHER INFORMATION CONTACT: Scott Stevenson, Aviation Safety Engineer, ECO Branch, FAA, 1200 District Avenue, Burlington, MA 01803; phone: (781) 238–7132; fax: (781) 238–7199; email: *Scott.M.Stevenson@faa.gov*.

SUPPLEMENTARY INFORMATION:

Background

The FAA issued a notice of proposed rulemaking (NPRM) to amend 14 CFR part 39 by adding an AD that would apply to all GE CF6–80C2A1, CF6–80C2A2, CF6–80C2A3, CF6–80C2A5, CF6–80C2A5F, and CF6–80C2A8 model turbofan engines with an installed left-hand rear mount link assembly, P/N 1846M23G01. The NPRM published in the **Federal Register** on November 5, 2021 (86 FR 61086). The NPRM was prompted by a report from the manufacturer reducing the life limit for the affected left-hand rear mount link assembly. The left-hand rear mount link assembly was redesigned and certified in 1999, and the FAA subsequently issued AD 2000–12–08 (65 FR 39536, June 27, 2000), mandating the replacement of the affected left-hand rear mount link assembly with a part eligible for installation. Later, analysis from the aircraft manufacturer of stress loads in their extended service goal mission profile revealed loads during the take-off phase that were not included at certification. These additional loads result in a reduced life limit on the left-hand rear mount link assembly. In the NPRM, the FAA proposed to require revising the ALS of the GE CF6–80C Engine Manual, GEK92451, as applicable to each affected engine model, and the operator's existing approved CAMP to incorporate a reduced life limit for the affected left-hand rear mount link assembly, P/N 1846M23G01. The FAA is issuing this AD to address the unsafe condition on these products.

Discussion of Final Airworthiness Directive

Comments

The FAA received comments from one commenter, FedEx Express, who supported the NPRM without change.

Conclusion

The FAA reviewed the relevant data, considered the comments received, and determined that air safety requires adopting the AD as proposed. Accordingly, the FAA is issuing this AD to address the unsafe condition on these products. Except for minor editorial changes, including the removal of the reference to GE CF6–80C2 Engine Manual, GEK92451, this AD is adopted as proposed in the NPRM.

Related Service Information

The FAA reviewed GE CF6–80C2 Temporary Revision (TR) 05–0276, dated July 13, 2021 (GE TR 05–0276), and GE CF6–80C2 TR 05–0277, dated July 9, 2021 (GE TR 05–0277). GE TR 05–0276 and GE TR 05–277 provide the new life limit to be updated into the ALS, for the affected left-hand rear mount link assembly, in the existing engine maintenance manual.

Costs of Compliance

The FAA estimates that this AD affects 220 engines installed on airplanes of U.S. registry.

The FAA estimates the following costs to comply with this AD:

ESTIMATED COSTS

Action	Labor cost	Parts cost	Cost per product	Cost on U.S. operators
Revise ALS of Engine Manual and the operator's existing approved CAMP.	2 work-hours × $85 per hour = $170	$0	$170	$37,400

Authority for This Rulemaking

Title 49 of the United States Code specifies the FAA's authority to issue rules on aviation safety. Subtitle I, section 106, describes the authority of the FAA Administrator. Subtitle VII: Aviation Programs, describes in more detail the scope of the Agency's authority.

The FAA is issuing this rulemaking under the authority described in Subtitle VII, Part A, Subpart III, Section 44701: General requirements. Under that section, Congress charges the FAA with promoting safe flight of civil aircraft in air commerce by prescribing regulations for practices, methods, and procedures the Administrator finds necessary for safety in air commerce. This regulation is within the scope of that authority because it addresses an unsafe condition that is likely to exist or develop on products identified in this rulemaking action.

Regulatory Findings

This AD will not have federalism implications under Executive Order 13132. This AD will not have a substantial direct effect on the States, on the relationship between the national government and the States, or on the distribution of power and responsibilities among the various levels of government.

For the reasons discussed above, I certify that this AD:

(1) Is not a ''significant regulatory action'' under Executive Order 12866,

(2) Will not affect intrastate aviation in Alaska, and

(3) Will not have a significant economic impact, positive or negative, on a substantial number of small entities under the criteria of the Regulatory Flexibility Act.

List of Subjects in 14 CFR Part 39

Air transportation, Aircraft, Aviation safety, Incorporation by reference, Safety.

The Amendment

Accordingly, under the authority delegated to me by the Administrator, the FAA amends 14 CFR part 39 as follows:

PART 39—AIRWORTHINESS DIRECTIVES

■ 1. The authority citation for part 39 continues to read as follows:

Authority: 49 U.S.C. 106(g), 40113, 44701.

§ 39.13 [Amended]

■ 2. The FAA amends § 39.13 by adding the following new airworthiness directive:

2022–02–18 General Electric Company: Amendment 39–21915; Docket No. FAA–2021–0949; Project Identifier AD–2021–00115–E.

(a) Effective Date

This airworthiness directive (AD) is effective February 25, 2022.

(b) Affected ADs

None.

(c) Applicability

This AD applies to General Electric Company (GE) CF6–80C2A1, CF6–80C2A2, CF6–80C2A3, CF6–80C2A5, CF6–80C2A5F, and CF6–80C2A8 model turbofan engines with an installed left-hand rear mount link assembly, part number (P/N) 1846M23G01.

(d) Subject

Joint Aircraft System Component (JASC) Code 7120, Engine Mount Section.

(e) Unsafe Condition

This AD was prompted by a report from the manufacturer on an updated analysis of stress loads during take-off, which revealed a stress increase with take-off phase loads that were not included at certification. The FAA is issuing this AD to lower the life limit of the left-hand rear mount link assembly and prevent the failure of the engine mount system. The unsafe condition, if not addressed, could result in separation of the engine from the airplane and loss of the airplane.

(f) Compliance

Comply with this AD within the compliance times specified, unless already done.

(g) Required Actions

Within 180 days after the effective date of this AD, revise the airworthiness limitations section of the existing engine maintenance manual, and the operator's existing approved continuous airworthiness maintenance program, by reducing the life limit of the left-hand rear mount link assembly, P/N 1846M23G01, from 50,000 flight cycles (FCs) to 23,800 FCs.

(h) Alternative Methods of Compliance (AMOCs)

(1) The Manager, ECO Branch, FAA, has the authority to approve AMOCs for this AD, if requested using the procedures found in 14 CFR 39.19. In accordance with 14 CFR 39.19, send your request to your principal inspector or local Flight Standards District Office, as appropriate. If sending information directly to the manager of the ECO Branch, send it to the attention of the person identified in paragraph (i) of this AD. You may email your request to: *ANE-AD-AMOC@faa.gov.*

(2) Before using any approved AMOC, notify your appropriate principal inspector, or lacking a principal inspector, the manager of the local flight standards district office/ certificate holding district office.

(i) Related Information

For more information about this AD, contact Scott Stevenson, Aviation Safety Engineer, ECO Branch, FAA, 1200 District Avenue, Burlington, MA 01803; phone: (781) 238–7132; fax: (781) 238–7199; email: *Scott.M.Stevenson@faa.gov.*

(j) Material Incorporated by Reference

None.

Issued on January 14, 2022.

Lance T. Gant,

Director, Compliance & Airworthiness Division, Aircraft Certification Service.

[FR Doc. 2022–01141 Filed 1–20–22; 8:45 am]

BILLING CODE 4910–13–P

DEPARTMENT OF TRANSPORTATION

Federal Aviation Administration

14 CFR Part 39

[Docket No. FAA–2021–0725; Project Identifier MCAI–2020–01402–T; Amendment 39–21882; AD 2021–26–23]

RIN 2120–AA64

Airworthiness Directives; Bombardier, Inc., Airplanes

AGENCY: Federal Aviation Administration (FAA), Department of Transportation (DOT).

ACTION: Final rule.

SUMMARY: The FAA is superseding Airworthiness Directive (AD) 2017–22–06, which applied to certain Bombardier, Inc., Model CL–600–2B16 (601–3A, 601–3R, and 604 Variants) airplanes. AD 2017–22–06 required repetitive inspections for fuel leakage at the engine and auxiliary power unit (APU) fuel pumps, and related investigative and corrective actions if necessary. This AD retains the requirements of AD 2017–22–06, and requires an inspection of the APU, repair if necessary, and modification of the engine electrical fuel pump (EFP) installation. This AD also adds airplanes to the applicability. This AD was prompted by reports of fuel leaks from the electrical connectors and conduits of the engine and APU EFP cartridge/ canister, and the development of additional actions to address the root cause of the fuel leaks. The FAA is issuing this AD to address the unsafe condition on these products.

DATES: This AD is effective February 25, 2022.

The Director of the Federal Register approved the incorporation by reference of certain publications listed in this AD as of February 25, 2022.

The Director of the Federal Register approved the incorporation by reference of certain other publications listed in this AD as of November 30, 2017 (82 FR 49498, October 26, 2017).

ADDRESSES: For service information identified in this final rule, contact Bombardier Business Aircraft Customer Response Center, 400 Côte-Vertu Road West, Dorval, Québec H4S 1Y9, Canada; telephone 514–855–2999; email *ac.yul@aero.bombardier.com;* internet *https://www.bombardier.com.* You may view this referenced service information at the FAA, Airworthiness Products Section, Operational Safety Branch, 2200 South 216th St., Des Moines, WA. For information on the availability of this material at the FAA, call 206–231–3195. It is also available on the internet at *https://www.regulations.gov* by searching for and locating Docket No. FAA–2021–0725.

Examining the AD Docket

You may examine the AD docket on the internet at *https://www.regulations.gov* by searching for and locating Docket No. FAA–2021–0725; or in person at Docket Operations between 9 a.m. and 5 p.m., Monday through Friday, except Federal holidays. The AD docket contains this final rule, any comments received, and other information. The address for Docket Operations is U.S. Department of Transportation, Docket Operations, M–30, West Building Ground Floor, Room W12–140, 1200 New Jersey Avenue SE, Washington, DC 20590.

FOR FURTHER INFORMATION CONTACT: Steven Dzierzynski, Aerospace Engineer, Avionics and Electrical Systems Section, FAA, New York ACO Branch, 1600 Stewart Avenue, Suite 410, Westbury, NY 11590; telephone 516–228–7367; fax 516–794–5531; email *9-avs-nyaco-cos@faa.gov.*

SUPPLEMENTARY INFORMATION:

Discussion

Transport Canada Civil Aviation (TCCA), which is the aviation authority for Canada, has issued TCCA AD CF–2016–32R4, dated October 13, 2020 (TCCA AD CF–2016–32R4); and TCCA AD CF–2020–38, dated October 13, 2020 (TCCA AD CF–2020–38); (also referred to as the Mandatory Continuing Airworthiness Information, or the MCAI), to correct an unsafe condition for certain Bombardier, Inc., Model CL–600–2B16 (601–3A, 601–3R, and 604 Variants) airplanes. You may examine the MCAI in the AD docket on the internet at *https://www.regulations.gov* by searching for and locating Docket No. FAA–2021–0725.

The FAA issued a notice of proposed rulemaking (NPRM) to amend 14 CFR part 39 to supersede AD 2017–22–06, Amendment 39–19086 (82 FR 49498, October 26, 2017) (AD 2017–22–06). AD 2017–22–06 applied to certain Bombardier, Inc., Model CL–600–2B16 (601–3A, 601–3R, and 604 Variants) airplanes. The NPRM published in the **Federal Register** on September 8, 2021 (86 FR 50291). The NPRM was

prompted by reports of fuel leaks from the electrical connectors and conduits of the engine APU EFP cartridge/canister, and the development of additional actions to address the root cause of the fuel leaks. The NPRM proposed to retain the requirements of AD 2017–22–06, and proposed to require an inspection of the APU, repair if necessary, and modification of the engine EFP installation. The NPRM also proposed to add airplanes to the applicability. The FAA is issuing this AD to address the potential for a fire hazard as a result of fuel leak from the APU EFP electrical conduit in the hot landing light compartment. See the MCAI for additional background information.

Comments

The FAA gave the public the opportunity to participate in developing this final rule. The following presents the comment received on the NPRM and the FAA's response to the comment.

Request To Use the Latest Service Information

An anonymous commenter requested that the FAA revise the NPRM to allow the use of the latest service bulletin. The commenter stated that the NPRM specifies the use of Bombardier Service Bulletin 604–28–024, dated June 16, 2020, for the actions specified in the NPRM, and that the service bulletin has since been revised to Bombardier Service Bulletin 604–28–024, Revision 1, dated May 28, 2021.

The FAA agrees with the commenter for the reasons provided above. Bombardier Service Bulletin 604–28–024, Revision 01, dated May 28, 2021, adds a figure to clarify the location of a certain drain hole. The service bulletin revision does not add work or affect the technical content of this AD. The FAA has revised the ''Related Service Information under 1 CFR part 51'' paragraph and figure 2 to paragraph (j) of this AD accordingly. The FAA also has also added paragraph (m)(4) of this AD to allow credit for actions required by paragraph (j) of this AD if those actions were performed before the effective date of this AD using Bombardier Service Bulletin 604–28–024, dated June 16, 2020.

Conclusion

The FAA reviewed the relevant data, considered the comment received, and determined that air safety and the public interest require adopting this final rule with the change described previously and minor editorial changes. The FAA has determined that these minor changes:

- Are consistent with the intent that was proposed in the NPRM for addressing the unsafe condition; and
- Do not add any additional burden upon the public than was already proposed in the NPRM.

The FAA also determined that these changes will not increase the economic burden on any operator or increase the scope of this final rule.

Related Service Information Under 1 CFR Part 51

Bombardier has issued the following service information, which describes procedures for repetitive general visual inspections and rectifications for any fuel leak from the engine and APU EFP electrical wiring conduit outlets. These documents are distinct since they apply to different airplane serial numbers.

- Bombardier Service Bulletin 604–28–022, Revision 3, dated August 31, 2018.
- Bombardier Service Bulletin 605–28–010, Revision 3, dated August 31, 2018.
- Bombardier Service Bulletin 650–28–001, Revision 3, dated January 3, 2019.

Bombardier has also issued the following service information, which describes procedures for a detailed visual inspection of the APU for any damage or deformations (*e.g.,* cut wires and a broken harness assembly of the fuel boost pump connector), modifying the engine EFP installation, and repair if necessary. These documents are distinct since they apply to different airplane serial numbers.

- Bombardier Service Bulletin 604–28–024, Revision 01, dated May 28, 2021.
- Bombardier Service Bulletin 605–28–012, dated June 16, 2020.
- Bombardier Service Bulletin 650–28–002, dated June 16, 2020.

This AD also requires Bombardier Service Bulletin 604–28–022, dated October 19, 2015, and Bombardier Service Bulletin 605–28–010, dated October 19, 2015, which the Director of the Federal Register approved for incorporation by reference as of November 30, 2017 (82 FR 49498, October 26, 2017).

This service information is reasonably available because the interested parties have access to it through their normal course of business or by the means identified in the **ADDRESSES** section.

Costs of Compliance

The FAA estimates that this AD affects 128 airplanes of U.S. registry.

The FAA estimates the following costs to comply with this AD:

ESTIMATED COSTS FOR REQUIRED ACTIONS

Action	Labor cost	Parts cost	Cost per product	Cost on U.S. operators
Retained actions from AD 2017–22–06 (for 121 airplanes).	1 work-hour × $85 per hour = $85.	$0	$85 per inspection cycle	$10,285 per inspection cycle.
New actions	20 work-hours × $85 per hour = $1,700.	1,768	$3,468	$443,904.

The FAA estimates the following costs to do any necessary repair that would be required based on the results of any required actions. The FAA has no way of determining the number of aircraft that might need this repair:

ESTIMATED COSTS OF ON-CONDITION ACTIONS

Labor cost	Parts cost	Cost per product
5 work-hours × $85 per hour = $425	$8,618	$9,043

According to the manufacturer, some or all of the costs of this AD may be covered under warranty, thereby reducing the cost impact on affected operators. The FAA does not control warranty coverage for affected operators. As a result, the FAA has included all known costs in the cost estimate.

Authority for This Rulemaking

Title 49 of the United States Code specifies the FAA's authority to issue rules on aviation safety. Subtitle I, section 106, describes the authority of the FAA Administrator. Subtitle VII: Aviation Programs, describes in more detail the scope of the Agency's authority.

The FAA is issuing this rulemaking under the authority described in Subtitle VII, Part A, Subpart III, Section 44701: General requirements. Under that section, Congress charges the FAA with promoting safe flight of civil aircraft in air commerce by prescribing regulations for practices, methods, and procedures the Administrator finds necessary for safety in air commerce. This regulation is within the scope of that authority because it addresses an unsafe condition that is likely to exist or develop on products identified in this rulemaking action.

Regulatory Findings

The FAA determined that this AD will not have federalism implications under Executive Order 13132. This AD will not have a substantial direct effect on the States, on the relationship between the national government and the States, or on the distribution of power and responsibilities among the various levels of government.

For the reasons discussed above, I certify that this AD:

(1) Is not a ''significant regulatory action'' under Executive Order 12866,

(2) Will not affect intrastate aviation in Alaska, and

(3) Will not have a significant economic impact, positive or negative, on a substantial number of small entities under the criteria of the Regulatory Flexibility Act.

List of Subjects in 14 CFR Part 39

Air transportation, Aircraft, Aviation safety, Incorporation by reference, Safety.

Adoption of the Amendment

Accordingly, under the authority delegated to me by the Administrator, the FAA amends 14 CFR part 39 as follows:

PART 39—AIRWORTHINESS DIRECTIVES

■ 1. The authority citation for part 39 continues to read as follows:

Authority: 49 U.S.C. 106(g), 40113, 44701.

§ 39.13 [Amended]

■ 2. The FAA amends § 39.13 by:

■ a. Removing Airworthiness Directive (AD) 2017–22–06, Amendment 39–19086 (82 FR 49498, October 26, 2017); and

■ b. Adding the following new AD:

2021–21–23 Bombardier, Inc.: Amendment 39–21882; Docket No. FAA–2021–0725; Project Identifier MCAI–2020–01402–T.

(a) Effective Date

This airworthiness directive (AD) is effective February 25, 2022.

(b) Affected ADs

This AD replaces AD 2017–22–06, Amendment 39–19086 (82 FR 49498, October 26, 2017) (AD 2017–22–06).

(c) Applicability

This AD applies to Bombardier, Inc., Model CL–600–2B16 (601–3A, 601–3R, and 604 Variants) airplanes, certificated in any category, serial numbers 5301 through 5665 inclusive, 5701 through 5990 inclusive, and 6050 through 6163 inclusive.

(d) Subject

Air Transport Association (ATA) of America Code 28, Fuel.

(e) Reason

This AD was prompted by reports of fuel leaks from the electrical connectors and conduits of the engine and auxiliary power unit (APU) electrical fuel pump (EFP) cartridge/canister, and the development of additional actions to address the root cause of the fuel leaks. The FAA is issuing this AD to address the potential for a fire hazard as a result of fuel leak from the APU EFP electrical conduit in the hot landing light compartment.

(f) Compliance

Comply with this AD within the compliance times specified, unless already done.

(g) Retained Actions for Certain Airplanes, With Revised Service Information and Method of Compliance Provisions

This paragraph restates the requirements of paragraph (g) of AD 2017–22–06, with revised service information and method of compliance provisions. For Model CL–600–2B16 airplanes having serial numbers 5301 through 5665 inclusive: Within 600 flight hours or 12 months, whichever occurs first after November 30, 2017 (the effective date of AD 2017–22–06), do the inspections specified in paragraphs (g)(1) through (3) of this AD, and do all applicable corrective actions, in accordance with the Accomplishment Instructions of Bombardier Service Bulletin 604–28–022, dated October 19, 2015, or Bombardier Service Bulletin 604–28–022, Revision 3, dated August 31, 2018. Do all applicable corrective actions before further flight. Repeat the inspections at intervals not to exceed 600 flight hours or 12 months, whichever occurs first. As the effective date of this AD, use Bombardier Service Bulletin 604–28–022, Revision 3, dated August 31, 2018, only.

(1) Do a general visual inspection for traces of fuel coming from the right-hand engine boost pump at the location of the belly fairing screw (FS412, BL 0.0).

(2) Do a general visual inspection for traces of fuel coming from the left-hand engine boost pump at the location of the belly fairing screw (FS412, BL 0.0).

(3) Do a general visual inspection for traces of fuel coming from the EFP electrical wiring conduit outlet at the lower body fairing area for engine EFPs and at the right-hand landing light compartment for the APU EFP.

(h) Retained Actions for Certain Other Airplanes, With Revised Service Information and Compliance Method Provisions

This paragraph restates the requirements of paragraph (h) of AD 2017–22–06, with revised service information and compliance method provisions. For Model CL–600–2B16 airplanes having serial numbers 5701 through 5955 inclusive, 5957, 5960 through 5966 inclusive, 5968 through 5971 inclusive, and 5981: Within 600 flight hours or 12 months, whichever occurs first after November 30, 2017 (the effective date of AD 2017–22–06), do the inspections specified in paragraphs (h)(1) through (3) of this AD, and do all applicable related investigative and corrective actions, in accordance with the Accomplishment Instructions in Bombardier Service Bulletin 605–28–010, dated October 19, 2015, or Bombardier Service Bulletin 605–28–010, Revision 3, dated August 31, 2018. Do all applicable related investigative and corrective actions before further flight. Repeat the inspections at intervals not to exceed 600 flight hours or 12 months, whichever occurs first. As of the effective date of this AD, use Bombardier Service Bulletin 605–28–010, Revision 3, dated August 31, 2018, only.

(1) Do a general visual inspection for traces of fuel coming from the right-hand engine boost pump at the location of the belly fairing screw (FS412, BL 0.0).

(2) Do a general visual inspection for traces of fuel coming from the left-hand engine boost pump at the location of the belly fairing screw (FS412, BL 0.0).

(3) Do a general visual inspection of the right-hand landing light compartment for traces of fuel coming from the APU EFP.

(i) New Requirements of This AD: Inspections and Rectifications

For the airplanes identified in figure 1 to paragraph (i) of this AD: At the applicable compliance time specified in figure 1 to paragraph (i) of this AD, do a general visual inspection for any fuel leak from the engine and APU EFP electrical wiring conduit outlets, in accordance with the Accomplishment Instructions of the applicable service information specified in figure 1 to paragraph (i) of this AD. If any fuel leak is found during the general visual

inspection, before further flight, correct the fuel leak in accordance with the Accomplishment Instructions of the applicable service information specified in figure 1 to paragraph (i) of this AD. Thereafter, repeat the general visual inspection at intervals not to exceed 600 flight hours or 12 months, whichever occurs first.

BILLING CODE 4910–13–P

Figure 1 to paragraph (i) – *Compliance Times and Service Information*

Serial numbers–	Compliance Time–	Bombardier Service Bulletin–
5956, 5958, 5959, 5967, 5972 through 5980 inclusive, and 5982 through 5990 inclusive	Within 600 flight hours or 12 months, whichever occurs first after the effective date of this AD	Bombardier Service Bulletin 605-28-010, Revision 3, dated August 31, 2018
6050 through 6163 inclusive	Within 600 flight hours or 12 months, whichever occurs first after the effective date of this AD	Bombardier Service Bulletin 650-28-001, Revision 3, dated January 3, 2019

(j) New Requirements of This AD: Inspection and Modification

Within 60 months after the effective date of this AD: Do a detailed visual inspection of the APU for any damage or deformations, and modify the engine EFP installation, in accordance with the Accomplishment Instructions of the applicable service information specified in figure 2 to paragraph (j) of this AD. If any damage or deformations are found during the detailed visual inspection, before further flight, do the repair in accordance with the Accomplishment Instructions of the applicable service information specified in figure 2 to paragraph (j) of this AD.

Figure 2 to paragraph (j) – *Service Information*

Serial numbers–	Bombardier Service Bulletin–
5301 through 5665 inclusive	Bombardier Service Bulletin 604-28-024, Revision 01, dated May 28, 2021
5701 through 5990 inclusive	Bombardier Service Bulletin 605-28-012, dated June 16, 2020
6050 through 6163 inclusive	Bombardier Service Bulletin 650-28-002, dated June 16, 2020

BILLING CODE 4910–13–C

(k) No Reporting Requirement

Where service information identified in this AD specifies to submit certain information to the manufacturer, this AD does not include that requirement.

(l) Terminating Actions

Accomplishing the actions required by paragraph (j) of this AD terminates all requirements of this AD.

(m) Credit for Previous Actions

(1) This paragraph provides credit for actions required by paragraph (g) of this AD, if those actions were performed before the effective date of this AD using Bombardier Service Bulletin 604–28–022, dated October 19, 2015, provided that within 4 months or 150 flight hours from the effective date of this AD or within 1 year from the last inspection, whichever occurs first, the actions specified in paragraph (g) are done using Bombardier Service Bulletin 604–28–022, Revision 3, dated August 31, 2018. Bombardier Service Bulletin 604–28–022, dated October 19, 2015, was incorporated by reference in AD 2017–22–06.

(2) This paragraph provides credit for actions required by paragraph (h) of this AD, if those actions were performed before the effective date of this AD using Bombardier Service Bulletin 605–28–010, dated October 19, 2015, provided that within 4 months or 150 flight hours from the effective date of this AD or within 1 year from the last inspection, whichever occurs first, the actions specified in paragraph (h) of this AD are done using Bombardier Service Bulletin 605–28–010, Revision 3, dated August 31, 2018. Bombardier Service Bulletin 605–28–010, dated October 19, 2015, was incorporated by reference in AD 2017–22–06.

(3) This paragraph provides credit for actions required by paragraph (i) of this AD, if those actions were performed before the effective date of this AD using the service information in paragraphs (m)(3)(i) through (iii) of this AD, provided that within 1 year from the last inspection, the actions accomplished in paragraph (i) of this AD are done using Bombardier Service Bulletin 650–28–001, Revision 3, dated January 3, 2019. This service information is not incorporated by reference in this AD.

(i) Bombardier Service Bulletin 650–28–001, dated November 3, 2017.

(ii) Bombardier Service Bulletin 650–28–001, Revision 1, dated May 14, 2018.

(iii) Bombardier Service Bulletin 650–28–001, Revision 2, dated August 31, 2018.

(4) This paragraph provides credit for actions required by paragraph (j) of this AD, if those actions were performed before the effective date of this AD using Bombardier Service Bulletin 604–28–024, dated June 16, 2020. This service information is not incorporated by reference in this AD.

(n) Other FAA AD Provisions

(1) *Alternative Methods of Compliance (AMOCs):* The Manager, New York ACO Branch, FAA, has the authority to approve AMOCs for this AD, if requested using the procedures found in 14 CFR 39.19. In accordance with 14 CFR 39.19, send your request to your principal inspector or responsible Flight Standards Office, as appropriate. If sending information directly to the manager of the certification office, send it to ATTN: Program Manager, Continuing Operational Safety, FAA, New York ACO Branch, 1600 Stewart Avenue, Suite 410, Westbury, NY 11590; telephone 516–228–7300; fax 516–794–5531. Before using any approved AMOC, notify your appropriate principal inspector, or lacking a principal inspector, the manager of the responsible Flight Standards Office.

(2) *Contacting the Manufacturer:* For any requirement in this AD to obtain instructions from a manufacturer, the instructions must be accomplished using a method approved by the Manager, New York ACO Branch, FAA; or Transport Canada Civil Aviation (TCCA); or Bombardier, Inc.'s TCCA Design Approval Organization (DAO). If approved by the DAO, the approval must include the DAO-authorized signature.

(o) Related Information

(1) Refer to Mandatory Continuing Airworthiness Information (MCAI) TCCA AD CF–2016–32R4, dated October 13, 2020; and TCCA AD CF–2020–38, dated October 13, 2020; for related information. This MCAI may be found in the AD docket on the internet at *https://www.regulations.gov* by searching for and locating Docket No. FAA–2021–0725.

(2) For more information about this AD, contact Steven Dzierzynski, Aerospace Engineer, Avionics and Electrical Systems Section, FAA, New York ACO Branch, 1600 Stewart Avenue, Suite 410, Westbury, NY 11590; telephone 516–228–7367; fax 516–794–5531; email *9-avs-nyaco-cos@faa.gov.*

(3) Service information identified in this AD that is not incorporated by reference is available at the addresses specified in paragraphs (p)(5) and (6) of this AD.

(p) Material Incorporated by Reference

(1) The Director of the Federal Register approved the incorporation by reference (IBR) of the service information listed in this paragraph under 5 U.S.C. 552(a) and 1 CFR part 51.

(2) You must use this service information as applicable to do the actions required by this AD, unless this AD specifies otherwise.

(3) The following service information was approved for IBR on February 25, 2022.

(i) Bombardier Service Bulletin 604–28–022, Revision 3, dated August 31, 2018.

(ii) Bombardier Service Bulletin 604–28–024, Revision 01, dated May 28, 2021.

(iii) Bombardier Service Bulletin 605–28–010, Revision 3, dated August 31, 2018.

(iv) Bombardier Service Bulletin 605–28–012, dated June 16, 2020.

(v) Bombardier Service Bulletin 650–28–001, Revision 3, dated January 3, 2019.

(vi) Bombardier Service Bulletin 650–28–002, dated June 16, 2020.

(4) The following service information was approved for IBR on November 30, 2017 (82 FR 49498, October 26, 2017).

(i) Bombardier Service Bulletin 604–28–022, dated October 19, 2015.

(ii) Bombardier Service Bulletin 605–28–010, dated October 19, 2015.

(5) For service information identified in this AD, contact Bombardier Business Aircraft Customer Response Center, 400 Côte-Vertu Road West, Dorval, Québec H4S 1Y9, Canada; telephone 1–514–855–2999; email *ac.yul@aero.bombardier.com;* internet *https://www.bombardier.com.*

(6) You may view this service information at the FAA, Airworthiness Products Section, Operational Safety Branch, 2200 South 216th St., Des Moines, WA. For information on the availability of this material at the FAA, call 206–231–3195.

(7) You may view this service information that is incorporated by reference at the National Archives and Records Administration (NARA). For information on the availability of this material at NARA, email *fr.inspection@nara.gov,* or go to: *https://www.archives.gov/federal-register/cfr/ibr-locations.html.*

Issued on December 17, 2021.

Lance T. Gant,

Director, Compliance & Airworthiness Division, Aircraft Certification Service.

[FR Doc. 2022–00993 Filed 1–20–22; 8:45 am]

BILLING CODE 4910–13–P

DEPARTMENT OF TRANSPORTATION

Federal Aviation Administration

14 CFR Part 39

[Docket No. FAA–2021–0218; Project Identifier MCAI–2020–01519–A; Amendment 39–21880; AD 2021–26–21]

RIN 2120–AA64

Airworthiness Directives; Pilatus Aircraft Ltd. Airplanes

AGENCY: Federal Aviation Administration (FAA), DOT.

ACTION: Final rule.

SUMMARY: The FAA is adopting a new airworthiness directive (AD) for certain Pilatus Aircraft Ltd. (Pilatus) Model PC–24 airplanes. This AD was prompted by mandatory continuing airworthiness information (MCAI) originated by an aviation authority of another country to identify and correct an unsafe condition on an aviation product. The MCAI describes the unsafe condition as insufficient performance of the fuel drain system that could lead to fire and damage of the airplane. This AD requires modifying the fuel drain pipe routing and installing a drain mast. The FAA is issuing this AD to address the unsafe condition on these products.

DATES: This AD is effective February 25, 2022.

The Director of the Federal Register approved the incorporation by reference of a certain publication listed in this AD as of February 25, 2022.

ADDRESSES: For service information identified in this final rule, contact Pilatus Aircraft Ltd., CH–6371, Stans, Switzerland; phone: +41 848 24 7 365; email: *techsupport.ch@pilatus-aircraft.com;* website: *https://www.pilatus-aircraft.com.* You may view this service information at the FAA, Airworthiness Products Section, Operational Safety Branch, 901 Locust, Kansas City, MO 64106. For information on the availability of this material at the FAA, call (817) 222–5110.

Examining the AD Docket

You may examine the AD docket at *https://www.regulations.gov* by searching for and locating Docket No. FAA–2021–0218; or in person at Docket Operations between 9 a.m. and 5 p.m., Monday through Friday, except Federal holidays. The AD docket contains this final rule, the MCAI, any comments received, and other information. The address for Docket Operations is U.S. Department of Transportation, Docket Operations, M–30, West Building Ground Floor, Room W12–140, 1200 New Jersey Avenue SE, Washington, DC 20590.

FOR FURTHER INFORMATION CONTACT: Doug Rudolph, Aviation Safety Engineer, FAA, General Aviation & Rotorcraft Section, International Validation Branch, 901 Locust, Room 301, Kansas City, MO 64106; phone: (816) 329–4059; fax: (816) 329–4090; email: *doug.rudolph@faa.gov.*

SUPPLEMENTARY INFORMATION:

Background

The FAA issued a notice of proposed rulemaking (NPRM) to amend 14 CFR part 39 by adding an AD that would apply to certain serial-numbered Pilatus Model PC–24 airplanes. The NPRM published in the **Federal Register** on October 8, 2021 (86 FR 56227). The NPRM was based on MCAI from the European Union Aviation Safety Agency

(EASA), which is the Technical Agent for the Member States of the European Union. EASA issued AD 2020–0252, dated November 12, 2020 (referred to after this as ''the MCAI'') to address the unsafe condition on these products. The MCAI states:

An occurrence was reported where an insufficient performance of the fuel drain system was detected on certain PC–24 aeroplanes.

This condition, if not corrected, could lead, in case of a fuel leak, to contamination of the inboard rear fuselage, creating a fuel vapour which, in combination with an ignition source, could possibly result in a fire and consequent damage to the aeroplane.

To address this potential unsafe condition, Pilatus Aircraft issued the [service bulletin] SB providing instructions to modify the fuel drain pipe routing and to install a drain mast.

For the reason described above, this [EASA] AD requires modification of the fuel drain system.

In the NPRM, the FAA proposed to require modifying the fuel drain pipe routing and installing a drain mast. The FAA is issuing this AD to address the unsafe condition on these products.

You may examine the MCAI in the AD docket at *https://www.regulations.gov* by searching for and locating Docket No. FAA–2021–0218.

Comments

The FAA received no comments on the NPRM or on the determination of the costs.

Conclusion

This product has been approved by the aviation authority of another country and is approved for operation in the United States. Pursuant to the FAA's bilateral agreement with this State of Design Authority, it has notified the FAA of the unsafe condition described in the MCAI referenced above. The FAA reviewed the relevant data and determined that air safety requires adopting this AD as proposed. Accordingly, the FAA is issuing this AD to address the unsafe condition on these products. This AD is adopted as proposed in the NPRM.

Related Service Information Under 1 CFR Part 51

The FAA reviewed Pilatus PC–24 Service Bulletin No. 28–003, Revision 1, dated January 23, 2020. This service information specifies procedures for modifying the fuel drain pipe routing and installing a drain mast.

This service information is reasonably available because the interested parties have access to it through their normal course of business or by the means identified in the **ADDRESSES** section.

Costs of Compliance

The FAA estimates that this AD will affect 36 airplanes of U.S. registry. The FAA also estimates that it would take about 12 work-hours per airplane to do the modification and installation of this AD. The average labor rate is $85 per work-hour. Required parts would cost about $1,950 per airplane.

Based on these figures, the FAA estimates the cost of this AD on U.S. operators would be $106,920 or $2,970 per airplane.

The FAA has included all known costs in its cost estimate. According to the manufacturer, however, some of the costs of this AD may be covered under warranty, thereby reducing the cost impact on affected operators.

Authority for This Rulemaking

Title 49 of the United States Code specifies the FAA's authority to issue rules on aviation safety. Subtitle I, section 106, describes the authority of the FAA Administrator. Subtitle VII: Aviation Programs, describes in more detail the scope of the Agency's authority.

The FAA is issuing this rulemaking under the authority described in Subtitle VII, Part A, Subpart III, Section 44701: General requirements. Under that section, Congress charges the FAA with promoting safe flight of civil aircraft in air commerce by prescribing regulations for practices, methods, and procedures the Administrator finds necessary for safety in air commerce. This regulation is within the scope of that authority because it addresses an unsafe condition that is likely to exist or develop on products identified in this rulemaking action.

Regulatory Findings

This AD will not have federalism implications under Executive Order 13132. This AD will not have a substantial direct effect on the States, on the relationship between the national government and the States, or on the distribution of power and responsibilities among the various levels of government.

For the reasons discussed above, I certify this AD:

(1) Is not a ''significant regulatory action'' under Executive Order 12866,

(2) Will not affect intrastate aviation in Alaska, and

(3) Will not have a significant economic impact, positive or negative, on a substantial number of small entities under the criteria of the Regulatory Flexibility Act.

List of Subjects in 14 CFR Part 39

Air transportation, Aircraft, Aviation safety, Incorporation by reference, Safety.

The Amendment

Accordingly, under the authority delegated to me by the Administrator, the FAA amends 14 CFR part 39 as follows:

PART 39—AIRWORTHINESS DIRECTIVES

■ 1. The authority citation for part 39 continues to read as follows:

Authority: 49 U.S.C. 106(g), 40113, 44701.

§ 39.13 [Amended]

■ 2. The FAA amends § 39.13 by adding the following new airworthiness directive:

2021–26–21 Pilatus Aircraft Ltd.: Amendment 39–21880; Docket No. FAA–2021–0218; Project Identifier MCAI–2020–01519–A.

(a) Effective Date

This airworthiness directive (AD) is effective February 25, 2022.

(b) Affected ADs

None.

(c) Applicability

This AD applies to Pilatus Aircraft Ltd. Model PC–24 airplanes, serial numbers 101 through 184, certificated in any category.

(d) Subject

Joint Aircraft System Component (JASC) Code 2830, Fuel Dump System.

(e) Reason

This AD was prompted by mandatory continuing airworthiness information (MCAI) originated by an aviation authority of another country to identify and correct an unsafe condition on an aviation product. The MCAI describes the unsafe condition as insufficient performance of the fuel drain system that could lead to fire and damage of the airplane. The FAA is issuing this AD to prevent fuel contamination of the inboard rear fuselage. If not addressed, this unsafe condition, in combination with an ignition source, could result in fire and loss of control of the airplane.

(f) Compliance

Comply with this AD within the compliance times specified, unless already done.

(g) Required Actions

Within 5 months after the effective date of this AD, modify the fuel drain pipe routing and install the drain mast by following paragraphs A. and B. of the Accomplishment Instructions in Pilatus PC–24 Service Bulletin No. 28–003, Revision 1, dated January 23, 2020.

(h) Alternative Methods of Compliance (AMOCs)

(1) The Manager, International Validation Branch, FAA, has the authority to approve AMOCs for this AD, if requested using the procedures found in 14 CFR 39.19. In accordance with 14 CFR 39.19, send your request to your principal inspector or local Flight Standards District Office, as appropriate. If sending information directly to the manager of the certification office, send it to the attention of the person identified in paragraph (i)(1) of this AD and email to: *9-AVS-AIR-730-AMOC@faa.gov.*

(2) Before using any approved AMOC, notify your appropriate principal inspector, or lacking a principal inspector, the manager of the local flight standards district office/ certificate holding district office.

(i) Related Information

(1) For more information about this AD, contact Doug Rudolph, Aviation Safety Engineer, General Aviation & Rotorcraft Section, FAA, General Aviation & Rotorcraft Section, International Validation Branch, 901 Locust, Room 301, Kansas City, MO 64106; phone: (816) 329–4059; fax: (816) 329–4090; email: *doug.rudolph@faa.gov.*

(2) Refer to European Union Aviation Safety Agency AD 2020–0252, dated November 12, 2020, for related information. You may examine the MCAI at *https://www.regulations.gov* by searching for and locating Docket No. FAA–2021–0218.

(j) Material Incorporated by Reference

(1) The Director of the Federal Register approved the incorporation by reference of the service information listed in this paragraph under 5 U.S.C. 552(a) and 1 CFR part 51.

(2) You must use this service information as applicable to do the actions required by this AD, unless the AD specifies otherwise.

(i) Pilatus PC–24 Service Bulletin No. 28–003, Revision 1, dated January 23, 2020.

(ii) [Reserved]

(3) For service information identified in this AD, contact Pilatus Aircraft Ltd., Customer Support General Aviation, CH–6371 Stans, Switzerland; phone: +41 848 24 7 365; email: *techsupport.ch@pilatus-aircraft.com;* website: *https://www.pilatus-aircraft.com.*

(4) You may review this referenced service information at the FAA, Airworthiness Products Section, Operational Safety Branch, 901 Locust, Kansas City, MO 64106. For information on the availability of this material at the FAA, call (817) 222–5110.

(5) You may view this service information that is incorporated by reference at the National Archives and Records Administration (NARA). For information on the availability of this material at NARA, email: *fr.inspection@nara.gov,* or go to: *https://www.archives.gov/federal-register/cfr/ibr-locations.html.*

Issued on December 16, 2021.

Lance T. Gant,

Director, Compliance & Airworthiness Division, Aircraft Certification Service.

[FR Doc. 2022–01160 Filed 1–20–22; 8:45 am]

BILLING CODE 4910–13–P

DEPARTMENT OF ENERGY

Federal Energy Regulatory Commission

18 CFR Part 11

[Docket No. RM11–6–000]

Annual Update to Fee Schedule for the Use of Government Lands by Hydropower Licensees

AGENCY: Federal Energy Regulatory Commission.

ACTION: Final rule.

SUMMARY: In accordance with the Commission's regulations, the Commission, by its designee, the Executive Director, issues this annual update to the fee schedule in the appendix to the part, which lists per-acre rental fees by county (or other geographic area) for use of government lands by hydropower licensees.

DATES: This rule is effective January 21, 2022. The updates to appendix A to part 11, with the fee schedule of per-acre rental fees by county (or other geographic area), are from October 1, 2021, through September 30, 2022 (Fiscal Year 2022).

FOR FURTHER INFORMATION CONTACT: Raven A. Rodriguez, Financial Management Division, Office of the Executive Director, Federal Energy Regulatory Commission, 888 First Street NE, Washington, DC 20426, (202) 502–6276, *Raven.Rodriguez@ferc.gov.*

SUPPLEMENTARY INFORMATION:

Annual Update to Fee Schedule

(Issued January 14, 2022)

Section 11.2 of the Commission's regulations provides a method for computing reasonable annual charges for recompensing the United States for the use, occupancy, and enjoyment of its lands by hydropower licensees.[1] Annual charges for the use of government lands are payable in advance, and are based on an annual schedule of per-acre rental fees published in appendix A to part 11 of the Commission's regulations.[2] This document updates the fee schedule in appendix A to part 11 for fiscal year 2022 (October 1, 2021, through September 30, 2022).

Effective Date

This final rule is effective January 21, 2022. The provisions of 5 U.S.C. 804, regarding Congressional review of final rules, do not apply to this final rule because the rule concerns agency procedure and practice and will not substantially affect the rights or obligations of non-agency parties. This final rule merely updates the fee schedule published in the Code of Federal Regulations to reflect scheduled adjustments, as provided for in § 11.2 of the Commission's regulations.

List of Subjects in 18 CFR Part 11

Public lands.

By the Executive Director.

Issued: January 14, 2022.

Anton C. Porter,

Executive Director, Office of the Executive Director.

In consideration of the foregoing, the Commission amends appendix A to part 11, chapter I, title 18, *Code of Federal Regulations,* as follows:

PART 11—[AMENDED]

■ 1. The authority citation for part 11 continues to read as follows:

Authority: 16 U.S.C. 792–828c; 42 U.S.C. 7101–7352.

■ 2. Appendix A to part 11 is revised to read as follows:

APPENDIX A TO PART 11—FEE SCHEDULE FOR FY 2022

State	County	Fee/acre/yr
Alabama	Autauga	$59.33
	Baldwin	156.65
	Barbour	60.08
	Bibb	75.52
	Blount	96.91
	Bullock	57.63
	Butler	66.02
	Calhoun	114.24
	Chambers	67.61
	Cherokee	85.21
	Chilton	94.95
	Choctaw	55.16
	Clarke	61.32
	Clay	75.52
	Cleburne	93.09
	Coffee	70.84
	Colbert	71.70
	Conecuh	57.63
	Coosa	61.67
	Covington	72.21
	Crenshaw	67.10
	Cullman	107.00
	Dale	80.96
	Dallas	50.45
	DeKalb	105.87
	Elmore	80.61
	Escambia	66.13
	Etowah	103.21
	Fayette	59.35
	Franklin	65.94
	Geneva	66.62
	Greene	52.49
	Hale	60.81
	Henry	69.41
	Houston	95.06
	Jackson	81.84
	Jefferson	118.73
	Lamar	50.02
	Lauderdale	97.56

[1] *Annual Charges for the Use of Government Lands,* Order No. 774, 78 FR 5256 (January 25, 2013), FERC Stats. & Regs. ¶ 31,341 (2013).

[2] 18 CFR part 11 (2018).

APPENDIX A TO PART 11—FEE SCHEDULE FOR FY 2022—Continued

State	County	Fee/acre/yr
	Lawrence	102.13
	Lee	111.66
	Limestone	111.17
	Lowndes	51.07
	Macon	63.15
	Madison	142.76
	Marengo	54.00
	Marion	62.93
	Marshall	119.22
	Mobile	127.48
	Monroe	64.46
	Montgomery	71.57
	Morgan	118.46
	Perry	59.41
	Pickens	68.02
	Pike	70.49
	Randolph	84.94
	Russell	68.37
	Shelby	106.97
	St. Clair	115.07
	Sumter	50.37
	Talladega	89.03
	Tallapoosa	76.81
	Tuscaloosa	90.51
	Walker	81.23
	Washington	54.51
	Wilcox	48.91
	Winston	74.39
Alaska	Aleutian Islands	0.90
	Statewide	48.23
Arizona	Apache	4.46
	Cochise	32.55
	Coconino	3.44
	Gila	6.31
	Graham	10.52
	Greenlee	25.31
	La Paz	32.73
	Maricopa	149.93
	Mohave	13.62
	Navajo	3.59
	Pima	8.55
	Pinal	44.87
	Santa Cruz	32.37
	Yavapai	26.80
	Yuma	149.91
Arkansas	Arkansas	63.19
	Ashley	58.03
	Baxter	53.94
	Benton	129.91
	Boone	52.86
	Bradley	65.92
	Calhoun	51.96
	Carroll	55.15
	Chicot	59.58
	Clark	48.55
	Clay	86.43
	Cleburne	58.92
	Cleveland	84.87
	Columbia	46.58
	Conway	50.96
	Craighead	92.51
	Crawford	61.52
	Crittenden	77.23
	Cross	67.58
	Dallas	39.08
	Desha	65.25
	Drew	58.01
	Faulkner	77.01
	Franklin	51.42
	Fulton	37.44
	Garland	104.80
	Grant	72.43
	Greene	85.01
	Hempstead	50.21
	Hot Spring	55.81
	Howard	57.25
	Independence	46.10
	Izard	41.05
	Jackson	67.56
	Jefferson	65.51

APPENDIX A TO PART 11—FEE SCHEDULE FOR FY 2022—Continued

State	County	Fee/acre/yr
	Johnson	55.99
	Lafayette	51.08
	Lawrence	71.91
	Lee	63.63
	Lincoln	61.81
	Little River	48.41
	Logan	50.11
	Lonoke	73.86
	Madison	62.83
	Marion	48.89
	Miller	51.70
	Mississippi	68.90
	Monroe	56.61
	Montgomery	52.12
	Nevada	47.45
	Newton	48.85
	Ouachita	44.74
	Perry	55.31
	Phillips	63.89
	Pike	52.30
	Poinsett	76.62
	Polk	59.34
	Pope	64.37
	Prairie	58.56
	Pulaski	78.79
	Randolph	58.88
	Saline	68.66
	Scott	49.21
	Searcy	37.76
	Sebastian	67.04
	Sevier	53.50
	Sharp	42.75
	St. Francis	62.33
	Stone	43.38
	Union	55.45
	Van Buren	55.23
	Washington	102.91
	White	55.73
	Woodruff	65.25
	Yell	54.04
California	Alameda	45.36
	Alpine	29.19
	Amador	28.43
	Butte	76.87
	Calaveras	22.69
	Colusa	50.85
	Contra Costa	44.18
	Del Norte	53.08
	El Dorado	63.36
	Fresno	72.51
	Glenn	56.91
	Humboldt	19.72
	Imperial	71.08
	Inyo	3.96
	Kern	47.11
	Kings	69.03
	Lake	41.84
	Lassen	13.65
	Los Angeles	118.60
	Madera	69.95
	Marin	37.42
	Mariposa	13.17
	Mendocino	24.44
	Merced	83.53
	Modoc	12.49
	Mono	12.26
	Monterey	47.03
	Napa	281.84
	Nevada	47.39
	Orange	121.88
	Placer	42.86
	Plumas	14.67
	Riverside	115.81
	Sacramento	64.14
	San Benito	22.78
	San Bernardino	127.00
	San Diego	148.14
	San Francisco	496.35
	San Joaquin	95.87
	San Luis Obispo	48.17

APPENDIX A TO PART 11—FEE SCHEDULE FOR FY 2022—Continued

State	County	Fee/acre/yr
	San Mateo	62.36
	Santa Barbara	66.26
	Santa Clara	51.93
	Santa Cruz	136.29
	Shasta	18.63
	Sierra	10.86
	Siskiyou	19.57
	Solano	58.39
	Sonoma	141.62
	Stanislaus	99.70
	Sutter	60.80
	Tehama	27.53
	Trinity	12.26
	Tulare	74.85
	Tuolumne	23.71
	Ventura	162.76
	Yolo	61.94
	Yuba	52.48
Colorado	Adams	27.50
	Alamosa	36.14
	Arapahoe	38.53
	Archuleta	52.92
	Baca	13.37
	Bent	11.76
	Boulder	214.32
	Broomfield	93.21
	Chaffee	86.52
	Cheyenne	14.29
	Clear Creek	53.82
	Conejos	28.76
	Costilla	20.71
	Crowley	8.68
	Custer	33.13
	Delta	82.06
	Denver	1,086.50
	Dolores	30.40
	Douglas	115.03
	Eagle	56.42
	El Paso	23.99
	Elbert	26.02
	Fremont	39.83
	Garfield	40.90
	Gilpin	72.05
	Grand	37.49
	Gunnison	43.76
	Hinsdale	31.39
	Huerfano	16.40
	Jackson	22.56
	Jefferson	131.53
	Kiowa	12.85
	Kit Carson	20.78
	La Plata	38.51
	Lake	35.04
	Larimer	79.06
	Las Animas	10.26
	Lincoln	12.00
	Logan	20.25
	Mesa	94.16
	Mineral	58.67
	Moffat	13.62
	Montezuma	20.65
	Montrose	52.73
	Morgan	29.58
	Otero	12.79
	Ouray	52.07
	Park	28.64
	Phillips	28.85
	Pitkin	129.86
	Prowers	13.74
	Pueblo	17.53
	Rio Blanco	23.41
	Rio Grande	53.24
	Routt	53.55
	Saguache	32.36
	San Juan	27.41
	San Miguel	25.40
	Sedgwick	23.07
	Summit	72.03
	Teller	34.49
	Washington	18.72

Appendix A to Part 11—Fee Schedule for FY 2022—Continued

State	County	Fee/acre/yr
	Weld	44.09
	Yuma	27.84
Connecticut	Fairfield	278.46
	Hartford	416.01
	Litchfield	292.08
	Middlesex	384.67
	New Haven	605.98
	New London	295.82
	Tolland	250.31
	Windham	243.84
Delaware	Kent	207.75
	New Castle	249.08
	Sussex	222.18
Florida	Alachua	153.18
	Baker	89.74
	Bay	40.11
	Bradford	93.43
	Brevard	98.32
	Broward	648.17
	Calhoun	42.13
	Charlotte	140.35
	Citrus	155.08
	Clay	111.99
	Collier	92.88
	Columbia	85.30
	Dade	732.47
	DeSoto	97.95
	Dixie	72.80
	Duval	147.14
	Escambia	121.38
	Flagler	108.84
	Franklin	115.42
	Gadsden	83.24
	Gilchrist	104.07
	Glades	84.26
	Gulf	28.07
	Hamilton	75.59
	Hardee	104.38
	Hendry	95.84
	Hernando	205.13
	Highlands	76.40
	Hillsborough	228.41
	Holmes	65.21
	Indian River	112.36
	Jackson	72.25
	Jefferson	67.83
	Lafayette	59.15
	Lake	155.14
	Lee	238.73
	Leon	83.44
	Levy	90.13
	Liberty	76.59
	Madison	68.98
	Manatee	152.24
	Marion	217.38
	Martin	85.98
	Monroe	115.42
	Nassau	73.23
	Okaloosa	93.16
	Okeechobee	82.60
	Orange	164.92
	Osceola	75.89
	Palm Beach	163.88
	Pasco	140.06
	Pinellas	1,123.92
	Polk	118.60
	Putnam	77.78
	Santa Rosa	104.87
	Sarasota	179.84
	Seminole	161.77
	St. Johns	166.39
	St. Lucie	116.88
	Sumter	117.84
	Suwannee	86.41
	Taylor	71.39
	Union	72.80
	Volusia	201.63
	Wakulla	66.89
	Walton	73.76
	Washington	74.71

Appendix A to Part 11—Fee Schedule for FY 2022—Continued

State	County	Fee/acre/yr
Georgia	Appling	81.60
	Atkinson	72.93
	Bacon	103.37
	Baker	55.80
	Baldwin	54.37
	Banks	135.14
	Barrow	164.67
	Bartow	151.31
	Ben Hill	62.01
	Berrien	78.56
	Bibb	100.61
	Bleckley	64.79
	Brantley	73.31
	Brooks	87.80
	Bryan	77.28
	Bulloch	71.93
	Burke	71.40
	Butts	97.87
	Calhoun	75.69
	Camden	71.95
	Candler	79.36
	Carroll	120.20
	Catoosa	138.20
	Charlton	60.95
	Chatham	127.53
	Chattahoochee	74.29
	Chattooga	88.95
	Cherokee	217.86
	Clarke	194.26
	Clay	59.44
	Clayton	209.83
	Clinch	100.03
	Cobb	286.93
	Coffee	75.74
	Colquitt	83.08
	Columbia	111.81
	Cook	76.30
	Coweta	121.18
	Crawford	101.18
	Crisp	76.97
	Dade	99.98
	Dawson	175.37
	Decatur	81.87
	DeKalb	1,178.68
	Dodge	65.30
	Dooly	73.38
	Dougherty	97.17
	Douglas	168.14
	Early	64.52
	Echols	70.09
	Effingham	81.62
	Elbert	98.57
	Emanuel	52.51
	Evans	67.78
	Fannin	148.22
	Fayette	136.65
	Floyd	122.21
	Forsyth	197.87
	Franklin	144.36
	Fulton	478.75
	Gilmer	192.30
	Glascock	39.98
	Glynn	387.03
	Gordon	164.37
	Grady	94.43
	Greene	90.06
	Gwinnett	234.54
	Habersham	179.82
	Hall	234.36
	Hancock	52.54
	Haralson	119.29
	Harris	108.54
	Hart	141.19
	Heard	90.69
	Henry	187.90
	Houston	100.98
	Irwin	81.60
	Jackson	159.98
	Jasper	87.42
	Jeff Davis	62.91

Appendix A to Part 11—Fee Schedule for FY 2022—Continued

State	County	Fee/acre/yr
	Jefferson	65.05
	Jenkins	65.80
	Johnson	52.56
	Jones	70.47
	Lamar	87.92
	Lanier	76.10
	Laurens	52.64
	Lee	84.99
	Liberty	132.83
	Lincoln	78.48
	Long	84.41
	Lowndes	136.90
	Lumpkin	148.80
	Macon	80.79
	Madison	142.25
	Marion	59.65
	McDuffie	75.19
	McIntosh	59.57
	Meriwether	81.92
	Miller	81.42
	Mitchell	92.97
	Monroe	82.35
	Montgomery	64.89
	Morgan	117.36
	Murray	127.28
	Muscogee	125.65
	Newton	112.39
	Oconee	181.70
	Oglethorpe	109.32
	Paulding	145.18
	Peach	144.81
	Pickens	214.20
	Pierce	72.25
	Pike	122.98
	Polk	90.81
	Pulaski	67.08
	Putnam	105.63
	Quitman	57.94
	Rabun	206.94
	Randolph	71.12
	Richmond	92.42
	Rockdale	177.31
	Schley	71.52
	Screven	55.25
	Seminole	78.88
	Spalding	128.61
	Stephens	145.01
	Stewart	51.96
	Sumter	71.80
	Talbot	68.69
	Taliaferro	82.68
	Tattnall	97.29
	Taylor	52.21
	Telfair	55.50
	Terrell	70.39
	Thomas	91.42
	Tift	79.71
	Toombs	69.82
	Towns	138.05
	Treutlen	47.29
	Troup	81.52
	Turner	77.45
	Twiggs	60.70
	Union	144.93
	Upson	99.30
	Walker	106.46
	Walton	142.25
	Ware	64.42
	Warren	74.89
	Washington	52.89
	Wayne	52.24
	Webster	61.33
	Wheeler	45.93
	White	204.08
	Whitfield	155.33
	Wilcox	65.50
	Wilkes	86.57
	Wilkinson	51.48
	Worth	75.42
Hawaii	Hawaii	150.06

APPENDIX A TO PART 11—FEE SCHEDULE FOR FY 2022—Continued

State	County	Fee/acre/yr
	Honolulu	536.57
	Kauai	194.38
	Maui	248.14
Idaho	Ada	123.18
	Adams	20.08
	Bannock	25.29
	Bear Lake	18.64
	Benewah	25.07
	Bingham	32.95
	Blaine	32.77
	Boise	18.56
	Bonner	65.22
	Bonneville	37.75
	Boundary	61.96
	Butte	26.59
	Camas	17.37
	Canyon	106.72
	Caribou	24.04
	Cassia	41.32
	Clark	22.73
	Clearwater	31.98
	Custer	35.31
	Elmore	32.28
	Franklin	30.11
	Fremont	35.84
	Gem	36.46
	Gooding	77.92
	Idaho	21.29
	Jefferson	45.62
	Jerome	78.22
	Kootenai	71.56
	Latah	32.92
	Lemhi	32.72
	Lewis	25.44
	Lincoln	47.29
	Madison	53.91
	Minidoka	58.79
	Nez Perce	26.93
	Oneida	21.47
	Owyhee	21.09
	Payette	45.40
	Power	31.95
	Shoshone	86.97
	Teton	51.21
	Twin Falls	57.49
	Valley	33.60
	Washington	17.54
Illinois	Adams	177.82
	Alexander	93.56
	Bond	187.88
	Boone	213.49
	Brown	153.01
	Bureau	224.64
	Calhoun	114.49
	Carroll	219.72
	Cass	174.87
	Champaign	254.65
	Christian	236.09
	Clark	156.01
	Clay	139.97
	Clinton	189.36
	Coles	215.24
	Cook	564.00
	Crawford	143.60
	Cumberland	173.39
	De Witt	229.23
	DeKalb	257.47
	Douglas	247.93
	DuPage	459.37
	Edgar	202.94
	Edwards	146.83
	Effingham	180.47
	Fayette	147.54
	Ford	212.34
	Franklin	121.90
	Fulton	169.27
	Gallatin	145.05
	Greene	169.02
	Grundy	242.38
	Hamilton	131.47

APPENDIX A TO PART 11—FEE SCHEDULE FOR FY 2022—Continued

State	County	Fee/acre/yr
	Hancock	193.81
	Hardin	89.68
	Henderson	190.26
	Henry	215.98
	Iroquois	200.84
	Jackson	147.21
	Jasper	153.99
	Jefferson	113.65
	Jersey	173.01
	Jo Daviess	167.00
	Johnson	101.16
	Kane	288.57
	Kankakee	213.79
	Kendall	247.60
	Knox	200.04
	La Salle	249.41
	Lake	332.06
	Lawrence	154.43
	Lee	236.91
	Livingston	224.94
	Logan	229.04
	Macon	252.82
	Macoupin	196.65
	Madison	237.95
	Marion	133.52
	Marshall	220.71
	Mason	190.86
	Massac	105.80
	McDonough	200.45
	McHenry	260.78
	McLean	269.06
	Menard	213.38
	Mercer	179.05
	Monroe	182.00
	Montgomery	198.87
	Morgan	225.41
	Moultrie	238.80
	Ogle	235.03
	Peoria	215.70
	Perry	130.70
	Piatt	253.10
	Pike	161.70
	Pope	95.42
	Pulaski	112.14
	Putnam	228.82
	Randolph	148.22
	Richland	144.31
	Rock Island	190.37
	Saline	131.85
	Sangamon	244.10
	Schuyler	149.89
	Scott	177.60
	Shelby	192.61
	St. Clair	202.72
	Stark	227.24
	Stephenson	230.25
	Tazewell	226.09
	Union	116.11
	Vermilion	224.21
	Wabash	151.23
	Warren	221.17
	Washington	175.53
	Wayne	130.21
	White	136.20
	Whiteside	215.70
	Will	242.93
	Williamson	108.04
	Winnebago	195.07
	Woodford	245.22
Indiana	Adams	225.39
	Allen	216.56
	Bartholomew	182.19
	Benton	210.68
	Blackford	179.93
	Boone	207.60
	Brown	119.59
	Carroll	205.37
	Cass	170.06
	Clark	150.23
	Clay	138.93

APPENDIX A TO PART 11—FEE SCHEDULE FOR FY 2022—Continued

State	County	Fee/acre/yr
	Clinton	195.29
	Crawford	84.28
	Daviess	207.57
	Dearborn	132.42
	Decatur	192.95
	DeKalb	151.10
	Delaware	180.69
	Dubois	148.60
	Elkhart	304.50
	Fayette	154.07
	Floyd	148.63
	Fountain	183.38
	Franklin	154.46
	Fulton	171.94
	Gibson	176.63
	Grant	192.29
	Greene	134.90
	Hamilton	238.36
	Hancock	205.48
	Harrison	124.63
	Hendricks	208.07
	Henry	163.09
	Howard	211.52
	Huntington	186.71
	Jackson	144.24
	Jasper	175.87
	Jay	206.62
	Jefferson	112.80
	Jennings	124.33
	Johnson	183.74
	Knox	169.55
	Kosciusko	193.95
	LaGrange	251.95
	Lake	189.76
	LaPorte	200.36
	Lawrence	101.23
	Madison	220.87
	Marion	287.77
	Marshall	170.50
	Martin	105.86
	Miami	183.88
	Monroe	178.94
	Montgomery	190.25
	Morgan	171.32
	Newton	183.41
	Noble	174.18
	Ohio	118.99
	Orange	122.28
	Owen	123.75
	Parke	159.09
	Perry	109.32
	Pike	134.32
	Porter	184.31
	Posey	165.43
	Pulaski	167.53
	Putnam	175.29
	Randolph	174.80
	Ripley	140.64
	Rush	197.63
	Scott	146.23
	Shelby	189.19
	Spencer	125.55
	St. Joseph	220.30
	Starke	136.31
	Steuben	150.83
	Sullivan	135.58
	Switzerland	111.63
	Tippecanoe	245.90
	Tipton	222.48
	Union	172.71
	Vanderburgh	215.37
	Vermillion	154.56
	Vigo	147.78
	Wabash	171.34
	Warren	184.86
	Warrick	147.89
	Washington	122.61
	Wayne	149.61
	Wells	205.50
	White	212.89

APPENDIX A TO PART 11—FEE SCHEDULE FOR FY 2022—Continued

State	County	Fee/acre/yr
	Whitley	172.79
Iowa	Adair	143.12
	Adams	136.47
	Allamakee	146.26
	Appanoose	111.24
	Audubon	187.88
	Benton	202.14
	Black Hawk	238.70
	Boone	217.99
	Bremer	218.67
	Buchanan	215.74
	Buena Vista	220.15
	Butler	196.18
	Calhoun	217.33
	Carroll	219.74
	Cass	161.31
	Cedar	215.03
	Cerro Gordo	200.88
	Cherokee	216.56
	Chickasaw	204.22
	Clarke	116.87
	Clay	218.51
	Clayton	151.74
	Clinton	206.44
	Crawford	185.37
	Dallas	223.54
	Davis	107.16
	Decatur	105.22
	Delaware	212.70
	Des Moines	189.09
	Dickinson	203.56
	Dubuque	236.24
	Emmet	196.53
	Fayette	196.37
	Floyd	201.38
	Franklin	213.83
	Fremont	164.24
	Greene	227.04
	Grundy	248.63
	Guthrie	172.42
	Hamilton	222.06
	Hancock	208.54
	Hardin	213.80
	Harrison	168.59
	Henry	171.49
	Howard	204.00
	Humboldt	221.32
	Ida	201.05
	Iowa	175.54
	Jackson	163.45
	Jasper	178.20
	Jefferson	151.54
	Johnson	219.93
	Jones	190.51
	Keokuk	159.73
	Kossuth	215.96
	Lee	141.36
	Linn	227.89
	Louisa	181.45
	Lucas	93.39
	Lyon	273.32
	Madison	155.10
	Mahaska	169.47
	Marion	157.92
	Marshall	207.97
	Mills	163.97
	Mitchell	215.22
	Monona	157.67
	Monroe	115.10
	Montgomery	155.43
	Muscatine	183.89
	O'Brien	266.17
	Osceola	239.77
	Page	146.95
	Palo Alto	219.30
	Plymouth	234.27
	Pocahontas	220.67
	Polk	241.93
	Pottawattamie	185.64
	Poweshiek	183.56

APPENDIX A TO PART 11—FEE SCHEDULE FOR FY 2022—Continued

State	County	Fee/acre/yr
	Ringgold	105.46
	Sac	217.36
	Scott	262.37
	Shelby	187.53
	Sioux	284.73
	Story	259.06
	Tama	198.56
	Taylor	131.68
	Union	121.99
	Van Buren	127.90
	Wapello	133.43
	Warren	154.23
	Washington	188.51
	Wayne	116.35
	Webster	217.49
	Winnebago	191.25
	Winneshiek	175.16
	Woodbury	201.81
	Worth	190.35
	Wright	207.23
Kansas	Allen	54.97
	Anderson	55.21
	Atchison	82.36
	Barber	38.90
	Barton	42.53
	Bourbon	54.40
	Brown	95.01
	Butler	61.44
	Chase	51.77
	Chautauqua	44.18
	Cherokee	59.90
	Cheyenne	40.01
	Clark	32.16
	Clay	73.47
	Cloud	62.36
	Coffey	49.44
	Comanche	31.40
	Cowley	50.09
	Crawford	54.56
	Decatur	39.50
	Dickinson	57.97
	Doniphan	92.95
	Douglas	110.31
	Edwards	49.93
	Elk	41.85
	Ellis	36.55
	Ellsworth	43.56
	Finney	42.40
	Ford	41.91
	Franklin	65.10
	Geary	62.34
	Gove	35.24
	Graham	34.81
	Grant	42.69
	Gray	43.24
	Greeley	38.36
	Greenwood	45.16
	Hamilton	28.88
	Harper	44.48
	Harvey	85.80
	Haskell	41.37
	Hodgeman	31.86
	Jackson	72.52
	Jefferson	78.67
	Jewell	55.81
	Johnson	102.21
	Kearny	39.06
	Kingman	43.86
	Kiowa	42.56
	Labette	57.46
	Lane	34.51
	Leavenworth	92.68
	Lincoln	46.79
	Linn	69.19
	Logan	36.46
	Lyon	53.86
	Marion	55.32
	Marshall	83.82
	McPherson	74.20
	Meade	39.99

APPENDIX A TO PART 11—FEE SCHEDULE FOR FY 2022—Continued

State	County	Fee/acre/yr
	Miami	83.85
	Mitchell	50.61
	Montgomery	54.45
	Morris	43.94
	Morton	27.74
	Nemaha	81.43
	Neosho	53.18
	Ness	29.37
	Norton	36.87
	Osage	53.96
	Osborne	38.20
	Ottawa	54.48
	Pawnee	44.92
	Phillips	39.06
	Pottawatomie	66.67
	Pratt	55.67
	Rawlins	41.77
	Reno	57.95
	Republic	70.06
	Rice	55.16
	Riley	81.87
	Rooks	33.89
	Rush	35.19
	Russell	36.27
	Saline	64.23
	Scott	41.04
	Sedgwick	93.84
	Seward	38.20
	Shawnee	81.08
	Sheridan	42.37
	Sherman	47.71
	Smith	51.72
	Stafford	48.84
	Stanton	28.82
	Stevens	37.57
	Sumner	49.79
	Thomas	47.33
	Trego	30.91
	Wabaunsee	52.20
	Wallace	36.63
	Washington	65.72
	Wichita	37.95
	Wilson	52.75
	Woodson	45.02
	Wyandotte	182.64
Kentucky	Adair	82.01
	Allen	94.39
	Anderson	101.23
	Ballard	98.53
	Barren	98.21
	Bath	64.34
	Bell	54.26
	Boone	163.70
	Bourbon	154.97
	Boyd	65.57
	Boyle	101.42
	Bracken	68.11
	Breathitt	42.78
	Breckinridge	84.17
	Bullitt	140.71
	Butler	72.20
	Caldwell	91.04
	Calloway	112.38
	Campbell	137.96
	Carlisle	103.55
	Carroll	92.51
	Carter	52.70
	Casey	63.88
	Christian	131.33
	Clark	120.81
	Clay	49.46
	Clinton	76.01
	Crittenden	74.90
	Cumberland	55.97
	Daviess	135.94
	Edmonson	86.65
	Elliott	44.14
	Estill	65.54
	Fayette	398.58
	Fleming	72.06

APPENDIX A TO PART 11—FEE SCHEDULE FOR FY 2022—Continued

State	County	Fee/acre/yr
	Floyd	84.19
	Franklin	108.16
	Fulton	100.17
	Gallatin	77.57
	Garrard	79.53
	Grant	90.22
	Graves	104.29
	Grayson	80.59
	Green	70.75
	Greenup	67.37
	Hancock	81.17
	Hardin	125.25
	Harlan	42.64
	Harrison	84.52
	Hart	83.92
	Henderson	138.94
	Henry	105.27
	Hickman	109.44
	Hopkins	91.94
	Jackson	64.23
	Jefferson	335.24
	Jessamine	181.04
	Johnson	81.82
	Kenton	152.60
	Knott	34.87
	Knox	65.27
	Larue	96.76
	Laurel	91.14
	Lawrence	43.60
	Lee	55.81
	Leslie	104.15
	Letcher	81.79
	Lewis	57.15
	Lincoln	88.50
	Livingston	76.67
	Logan	131.66
	Lyon	85.09
	Madison	94.55
	Magoffin	56.44
	Marion	94.93
	Marshall	103.50
	Martin	94.09
	Mason	80.62
	McCracken	121.49
	McCreary	66.93
	McLean	121.76
	Meade	118.00
	Menifee	52.70
	Mercer	107.01
	Metcalfe	72.99
	Monroe	77.62
	Montgomery	95.56
	Morgan	53.11
	Muhlenberg	81.68
	Nelson	110.72
	Nicholas	63.31
	Ohio	93.19
	Oldham	217.13
	Owen	77.19
	Owsley	36.59
	Pendleton	77.43
	Perry	31.24
	Pike	38.55
	Powell	63.63
	Pulaski	88.28
	Robertson	59.63
	Rockcastle	59.41
	Rowan	75.52
	Russell	84.33
	Scott	152.54
	Shelby	158.38
	Simpson	154.73
	Spencer	123.83
	Taylor	82.83
	Todd	141.37
	Trigg	112.06
	Trimble	88.47
	Union	137.38
	Warren	145.43
	Washington	87.57

APPENDIX A TO PART 11—FEE SCHEDULE FOR FY 2022—Continued

State	County	Fee/acre/yr
	Wayne	72.69
	Webster	100.41
	Whitley	69.03
	Wolfe	54.96
	Woodford	221.14
Louisiana	Acadia	68.97
	Allen	64.07
	Ascension	90.54
	Assumption	73.51
	Avoyelles	63.52
	Beauregard	75.88
	Bienville	63.60
	Bossier	77.96
	Caddo	74.48
	Calcasieu	86.89
	Caldwell	62.60
	Cameron	61.87
	Catahoula	67.47
	Claiborne	59.65
	Concordia	69.97
	De Soto	74.06
	East Baton Rouge.	206.03
	East Carroll	92.71
	East Feliciana	69.89
	Evangeline	60.95
	Franklin	70.81
	Grant	68.37
	Iberia	71.61
	Iberville	44.85
	Jackson	99.95
	Jefferson	58.28
	Jefferson Davis	55.61
	La Salle	79.53
	Lafayette	139.36
	Lafourche	72.39
	Lincoln	80.15
	Livingston	133.61
	Madison	68.64
	Morehouse	79.40
	Natchitoches	58.30
	Orleans	258.56
	Ouachita	106.40
	Plaquemines	35.23
	Pointe Coupee	77.18
	Rapides	93.56
	Red River	55.88
	Richland	70.69
	Sabine	94.36
	St. Bernard	43.75
	St. Charles	87.17
	St. Helena	103.85
	St. James	76.46
	St. John the Baptist.	87.39
	St. Landry	72.89
	St. Martin	80.03
	St. Mary	82.35
	St. Tammany	267.95
	Tangipahoa	126.37
	Tensas	69.99
	Terrebonne	102.83
	Union	76.01
	Vermilion	71.84
	Vernon	92.46
	Washington	90.19
	Webster	73.39
	West Baton Rouge.	70.41
	West Carroll	82.30
	West Feliciana	73.29
	Winn	70.02
Maine	Androscoggin	90.21
	Aroostook	44.54
	Cumberland	174.75
	Franklin	63.55
	Hancock	71.49
	Kennebec	77.34
	Knox	120.89
	Lincoln	118.82

APPENDIX A TO PART 11—FEE SCHEDULE FOR FY 2022—Continued

State	County	Fee/acre/yr
	Oxford	74.56
	Penobscot	63.09
	Piscataquis	36.02
	Sagadahoc	105.77
	Somerset	37.76
	Waldo	76.70
	Washington	39.25
	York	131.00
Maryland	Allegany	149.97
	Anne Arundel	276.56
	Baltimore	397.60
	Calvert	275.09
	Caroline	191.12
	Carroll	219.33
	Cecil	215.01
	Charles	253.66
	Dorchester	152.23
	Frederick	255.38
	Garrett	122.32
	Harford	292.49
	Howard	245.56
	Kent	177.25
	Montgomery	220.27
	Prince George's	218.10
	Queen Anne's	196.83
	Somerset	153.57
	St. Mary's	266.83
	Talbot	188.49
	Washington	216.09
	Wicomico	188.65
	Worcester	142.14
Massachusetts	Barnstable	735.95
	Berkshire	184.11
	Bristol	438.03
	Dukes	275.28
	Essex	420.30
	Franklin	154.61
	Hampden	249.12
	Hampshire	184.55
	Middlesex	384.03
	Nantucket	942.34
	Norfolk	413.08
	Plymouth	230.62
	Suffolk	5,537.36
	Worcester	296.19
Michigan	Alcona	68.95
	Alger	54.31
	Allegan	159.23
	Alpena	67.75
	Antrim	111.89
	Arenac	89.32
	Baraga	58.28
	Barry	127.81
	Bay	134.50
	Benzie	105.45
	Berrien	171.58
	Branch	112.77
	Calhoun	141.34
	Cass	123.05
	Charlevoix	100.37
	Cheboygan	68.21
	Chippewa	57.61
	Clare	80.16
	Clinton	150.55
	Crawford	93.23
	Delta	47.52
	Dickinson	72.60
	Eaton	111.17
	Emmet	100.29
	Genesee	140.09
	Gladwin	104.07
	Gogebic	69.24
	Grand Traverse	169.37
	Gratiot	144.61
	Hillsdale	114.72
	Houghton	62.67
	Huron	161.01
	Ingham	141.76
	Ionia	131.91
	Iosco	83.94

APPENDIX A TO PART 11—FEE SCHEDULE FOR FY 2022—Continued

State	County	Fee/acre/yr
	Iron	52.61
	Isabella	109.12
	Jackson	132.74
	Kalamazoo	187.82
	Kalkaska	70.66
	Kent	196.47
	Keweenaw	89.85
	Lake	65.54
	Lapeer	122.65
	Leelanau	194.90
	Lenawee	139.13
	Livingston	151.77
	Luce	67.11
	Mackinac	53.16
	Macomb	135.64
	Manistee	76.78
	Marquette	58.73
	Mason	82.82
	Mecosta	93.31
	Menominee	56.57
	Midland	147.54
	Missaukee	97.38
	Monroe	163.89
	Montcalm	106.25
	Montmorency	57.13
	Muskegon	171.05
	Newaygo	103.53
	Oakland	309.43
	Oceana	110.72
	Ogemaw	74.46
	Ontonagon	42.52
	Osceola	79.95
	Oscoda	72.97
	Otsego	74.01
	Ottawa	220.19
	Presque Isle	62.43
	Roscommon	65.25
	Saginaw	154.54
	Sanilac	131.25
	Schoolcraft	48.45
	Shiawassee	120.09
	St. Clair	139.87
	St. Joseph	152.20
	Tuscola	138.89
	Van Buren	154.12
	Washtenaw	208.27
	Wayne	307.78
	Wexford	89.66
Minnesota	Aitkin	57.49
	Anoka	206.91
	Becker	79.22
	Beltrami	53.60
	Benton	119.68
	Big Stone	118.53
	Blue Earth	196.34
	Brown	179.22
	Carlton	58.75
	Carver	183.80
	Cass	68.24
	Chippewa	160.68
	Chisago	124.72
	Clay	107.63
	Clearwater	55.23
	Cook	161.58
	Cottonwood	172.32
	Crow Wing	73.28
	Dakota	188.16
	Dodge	187.89
	Douglas	107.57
	Faribault	185.35
	Fillmore	151.41
	Freeborn	164.39
	Goodhue	169.13
	Grant	120.03
	Hennepin	367.05
	Houston	116.95
	Hubbard	72.13
	Isanti	105.97
	Itasca	77.48
	Jackson	175.51

APPENDIX A TO PART 11—FEE SCHEDULE FOR FY 2022—Continued

State	County	Fee/acre/yr
	Kanabec	72.30
	Kandiyohi	142.25
	Kittson	61.31
	Koochiching	39.34
	Lac qui Parle	122.08
	Lake	98.93
	Lake of the Woods.	46.26
	Le Sueur	168.34
	Lincoln	131.84
	Lyon	159.53
	Mahnomen	80.56
	Marshall	67.44
	Martin	182.98
	McLeod	156.04
	Meeker	141.49
	Mille Lacs	84.56
	Morrison	90.24
	Mower	185.73
	Murray	168.09
	Nicollet	190.88
	Nobles	188.40
	Norman	89.99
	Olmsted	181.48
	Otter Tail	80.94
	Pennington	52.56
	Pine	64.45
	Pipestone	159.02
	Polk	89.42
	Pope	112.97
	Ramsey	726.41
	Red Lake	64.61
	Redwood	170.08
	Renville	178.83
	Rice	186.93
	Rock	208.03
	Roseau	47.52
	Scott	206.91
	Sherburne	140.53
	Sibley	183.91
	St. Louis	54.30
	Stearns	140.37
	Steele	169.05
	Stevens	138.41
	Swift	137.48
	Todd	74.83
	Traverse	135.73
	Wabasha	150.46
	Wadena	59.98
	Waseca	180.50
	Washington	237.04
	Watonwan	193.47
	Wilkin	105.56
	Winona	156.83
	Wright	175.59
	Yellow Medicine	147.43
Mississippi	Adams	75.39
	Alcorn	54.46
	Amite	81.57
	Attala	47.18
	Benton	49.22
	Bolivar	77.31
	Calhoun	45.39
	Carroll	54.64
	Chickasaw	51.19
	Choctaw	47.05
	Claiborne	69.21
	Clarke	57.17
	Clay	47.97
	Coahoma	84.51
	Copiah	65.50
	Covington	92.13
	DeSoto	76.90
	Forrest	108.46
	Franklin	81.11
	George	95.35
	Greene	64.61
	Grenada	56.22
	Hancock	98.67
	Harrison	214.01

APPENDIX A TO PART 11—FEE SCHEDULE FOR FY 2022—Continued

State	County	Fee/acre/yr
	Hinds	84.13
	Holmes	61.97
	Humphreys	83.57
	Issaquena	69.95
	Itawamba	43.75
	Jackson	128.09
	Jasper	71.68
	Jefferson	64.40
	Jefferson Davis	65.68
	Jones	96.75
	Kemper	51.67
	Lafayette	70.02
	Lamar	90.67
	Lauderdale	52.52
	Lawrence	82.06
	Leake	77.36
	Lee	46.82
	Leflore	74.16
	Lincoln	78.48
	Lowndes	64.66
	Madison	67.16
	Marion	73.63
	Marshall	61.41
	Monroe	56.17
	Montgomery	51.09
	Neshoba	68.08
	Newton	60.59
	Noxubee	64.73
	Oktibbeha	71.45
	Panola	62.94
	Pearl River	90.60
	Perry	82.03
	Pike	95.22
	Pontotoc	50.29
	Prentiss	52.29
	Quitman	73.12
	Rankin	84.33
	Scott	65.07
	Sharkey	84.59
	Simpson	70.48
	Smith	73.42
	Stone	84.54
	Sunflower	81.37
	Tallahatchie	72.07
	Tate	72.20
	Tippah	52.95
	Tishomingo	48.30
	Tunica	75.52
	Union	51.09
	Walthall	79.33
	Warren	62.02
	Washington	94.76
	Wayne	79.12
	Webster	46.84
	Wilkinson	61.36
	Winston	58.19
	Yalobusha	47.64
	Yazoo	71.28
Missouri	Adair	74.73
	Andrew	102.86
	Atchison	131.24
	Audrain	113.92
	Barry	91.78
	Barton	73.69
	Bates	82.71
	Benton	73.26
	Bollinger	67.10
	Boone	151.34
	Buchanan	108.48
	Butler	125.67
	Caldwell	84.85
	Callaway	106.00
	Camden	59.10
	Cape Girardeau	116.25
	Carroll	95.82
	Carter	51.10
	Cass	100.62
	Cedar	66.62
	Chariton	92.05
	Christian	107.79

APPENDIX A TO PART 11—FEE SCHEDULE FOR FY 2022—Continued

State	County	Fee/acre/yr
	Clark	95.69
	Clay	111.59
	Clinton	99.60
	Cole	97.59
	Cooper	87.47
	Crawford	69.14
	Dade	75.13
	Dallas	67.93
	Daviess	87.39
	DeKalb	87.61
	Dent	55.97
	Douglas	56.21
	Dunklin	136.24
	Franklin	103.43
	Gasconade	74.60
	Gentry	82.92
	Greene	127.01
	Grundy	78.37
	Harrison	74.09
	Henry	72.00
	Hickory	56.42
	Holt	130.97
	Howard	80.92
	Howell	57.39
	Iron	55.27
	Jackson	155.62
	Jasper	86.21
	Jefferson	112.42
	Johnson	89.51
	Knox	81.42
	Laclede	67.37
	Lafayette	121.39
	Lawrence	85.60
	Lewis	88.65
	Lincoln	116.73
	Linn	77.17
	Livingston	90.26
	Macon	85.49
	Madison	56.18
	Maries	52.76
	Marion	106.16
	McDonald	71.79
	Mercer	72.08
	Miller	66.84
	Mississippi	156.24
	Moniteau	95.56
	Monroe	95.26
	Montgomery	100.94
	Morgan	102.70
	New Madrid	149.65
	Newton	97.40
	Nodaway	107.39
	Oregon	47.67
	Osage	64.64
	Ozark	57.09
	Pemiscot	140.12
	Perry	87.61
	Pettis	93.68
	Phelps	70.56
	Pike	94.11
	Platte	118.55
	Polk	67.59
	Pulaski	59.88
	Putnam	67.45
	Ralls	103.05
	Randolph	92.64
	Ray	94.11
	Reynolds	42.80
	Ripley	65.47
	Saline	107.33
	Schuyler	69.08
	Scotland	90.20
	Scott	136.16
	Shannon	52.54
	Shelby	99.81
	St Louis	116.38
	St. Charles	130.75
	St. Clair	65.66
	St. Francois	78.51
	Ste. Genevieve	78.99

APPENDIX A TO PART 11—FEE SCHEDULE FOR FY 2022—Continued

State	County	Fee/acre/yr
	Stoddard	143.28
	Stone	77.46
	Sullivan	62.58
	Taney	59.82
	Texas	55.30
	Vernon	76.04
	Warren	108.35
	Washington	63.49
	Wayne	62.90
	Webster	83.03
	Worth	76.12
	Wright	57.76
Montana	Beaverhead	27.17
	Big Horn	8.11
	Blaine	12.21
	Broadwater	24.13
	Carbon	30.61
	Carter	11.10
	Cascade	25.00
	Chouteau	19.25
	Custer	11.06
	Daniels	13.08
	Dawson	13.78
	Deer Lodge	40.08
	Fallon	12.46
	Fergus	22.57
	Flathead	131.79
	Gallatin	62.50
	Garfield	8.33
	Glacier	24.07
	Golden Valley	13.82
	Granite	33.38
	Hill	17.76
	Jefferson	35.11
	Judith Basin	19.16
	Lake	33.13
	Lewis and Clark	26.94
	Liberty	18.50
	Lincoln	108.30
	Madison	35.27
	McCone	10.89
	Meagher	18.73
	Mineral	103.18
	Missoula	57.68
	Musselshell	13.18
	Park	53.82
	Petroleum	13.99
	Phillips	10.93
	Pondera	24.90
	Powder River	11.37
	Powell	26.71
	Prairie	15.97
	Ravalli	118.28
	Richland	18.09
	Roosevelt	14.89
	Rosebud	8.87
	Sanders	20.38
	Sheridan	14.32
	Silver Bow	46.43
	Stillwater	27.72
	Sweet Grass	23.43
	Teton	24.46
	Toole	18.09
	Treasure	11.92
	Valley	13.28
	Wheatland	14.30
	Wibaux	12.73
	Yellowstone	20.69
Nebraska	Adams	131.97
	Antelope	113.75
	Arthur	19.86
	Banner	21.62
	Blaine	24.62
	Boone	110.30
	Box Butte	33.07
	Boyd	50.28
	Brown	29.06
	Buffalo	108.92
	Burt	152.72
	Butler	141.15

APPENDIX A TO PART 11—FEE SCHEDULE FOR FY 2022—Continued

State	County	Fee/acre/yr
	Cass	139.01
	Cedar	128.48
	Chase	51.69
	Cherry	23.13
	Cheyenne	25.29
	Clay	120.25
	Colfax	153.57
	Cuming	150.91
	Custer	61.36
	Dakota	140.23
	Dawes	22.04
	Dawson	84.59
	Deuel	32.35
	Dixon	115.93
	Dodge	158.97
	Douglas	189.52
	Dundy	37.93
	Fillmore	135.07
	Franklin	85.83
	Frontier	46.59
	Furnas	61.16
	Gage	109.76
	Garden	21.47
	Garfield	36.77
	Gosper	69.72
	Grant	20.75
	Greeley	73.51
	Hall	126.02
	Hamilton	157.21
	Harlan	71.35
	Hayes	35.08
	Hitchcock	39.02
	Holt	59.01
	Hooker	18.22
	Howard	86.55
	Jefferson	102.92
	Johnson	90.02
	Kearney	129.72
	Keith	40.31
	Keya Paha	35.11
	Kimball	26.65
	Knox	82.93
	Lancaster	138.79
	Lincoln	41.50
	Logan	29.75
	Loup	28.83
	Madison	144.27
	McPherson	20.31
	Merrick	125.80
	Morrill	28.39
	Nance	104.80
	Nemaha	112.76
	Nuckolls	88.96
	Otoe	122.90
	Pawnee	80.43
	Perkins	53.06
	Phelps	126.79
	Pierce	120.79
	Platte	156.89
	Polk	146.55
	Red Willow	48.27
	Richardson	105.79
	Rock	28.21
	Saline	116.92
	Sarpy	184.44
	Saunders	139.86
	Scotts Bluff	50.53
	Seward	141.57
	Sheridan	24.05
	Sherman	66.35
	Sioux	22.34
	Stanton	123.74
	Thayer	97.19
	Thomas	19.34
	Thurston	119.68
	Valley	71.35
	Washington	161.63
	Wayne	136.66
	Webster	67.91
	Wheeler	37.88

APPENDIX A TO PART 11—FEE SCHEDULE FOR FY 2022—Continued

State	County	Fee/acre/yr
	York	170.53
Nevada	Carson City	6.31
	Churchill	13.28
	Clark	21.57
	Douglas	14.26
	Elko	3.81
	Esmeralda	14.45
	Eureka	3.47
	Humboldt	6.15
	Lander	7.28
	Lincoln	17.87
	Lyon	15.86
	Mineral	2.03
	Nye	12.01
	Pershing	5.56
	Storey	6.31
	Washoe	7.12
	White Pine	9.20
New Hampshire	Belknap	127.84
	Carroll	102.21
	Cheshire	98.62
	Coos	66.70
	Grafton	101.64
	Hillsborough	202.27
	Merrimack	150.84
	Rockingham	293.48
	Strafford	168.92
	Sullivan	124.67
New Jersey	Atlantic	313.19
	Bergen	2,440.79
	Burlington	246.64
	Camden	402.87
	Cape May	357.28
	Cumberland	240.48
	Essex	2,071.66
	Gloucester	311.03
	Hudson	1,234.39
	Hunterdon	383.19
	Mercer	444.46
	Middlesex	534.24
	Monmouth	514.83
	Morris	525.72
	Ocean	466.96
	Passaic	784.02
	Salem	206.60
	Somerset	485.24
	Sussex	283.03
	Union	3,838.57
	Warren	298.96
New Mexico	Bernalillo	54.33
	Catron	8.27
	Chaves	9.31
	Cibola	6.24
	Colfax	9.94
	Curry	13.69
	De Baca	7.38
	Dona Ana	48.91
	Eddy	11.64
	Grant	9.59
	Guadalupe	6.12
	Harding	7.21
	Hidalgo	10.26
	Lea	8.11
	Lincoln	9.81
	Los Alamos	10.26
	Luna	10.14
	McKinley	8.43
	Mora	10.87
	Otero	8.64
	Quay	6.93
	Rio Arriba	16.90
	Roosevelt	9.00
	San Juan	10.52
	San Miguel	7.92
	Sandoval	8.84
	Santa Fe	17.35
	Sierra	7.11
	Socorro	12.37
	Taos	32.20
	Torrance	9.39

APPENDIX A TO PART 11—FEE SCHEDULE FOR FY 2022—Continued

State	County	Fee/acre/yr
	Union	8.13
	Valencia	22.88
New York	Albany	118.22
	Allegany	53.53
	Bronx	85.86
	Broome	82.14
	Cattaraugus	60.92
	Cayuga	105.16
	Chautauqua	70.33
	Chemung	69.64
	Chenango	54.67
	Clinton	70.33
	Columbia	111.36
	Cortland	61.69
	Delaware	76.58
	Dutchess	240.37
	Erie	121.67
	Essex	63.34
	Franklin	66.13
	Fulton	74.21
	Genesee	88.94
	Greene	83.92
	Hamilton	88.84
	Herkimer	60.86
	Jefferson	71.18
	Kings	11,795.34
	Lewis	53.42
	Livingston	98.70
	Madison	69.69
	Monroe	114.50
	Montgomery	66.08
	Nassau	461.65
	New York	85.86
	Niagara	81.63
	Oneida	70.70
	Onondaga	109.60
	Ontario	107.08
	Orange	184.43
	Orleans	84.37
	Oswego	58.84
	Otsego	70.89
	Putnam	159.57
	Queens	1,290.06
	Rensselaer	93.41
	Richmond	85.86
	Rockland	765.04
	Saratoga	156.61
	Schenectady	114.02
	Schoharie	64.75
	Schuyler	86.95
	Seneca	99.87
	St. Lawrence	48.71
	Steuben	55.81
	Suffolk	324.90
	Sullivan	112.02
	Tioga	60.76
	Tompkins	100.75
	Ulster	183.44
	Warren	110.99
	Washington	74.29
	Wayne	91.39
	Westchester	283.07
	Wyoming	92.08
	Yates	138.98
North Carolina	Alamance	160.19
	Alexander	150.37
	Alleghany	131.81
	Anson	109.09
	Ashe	140.38
	Avery	173.38
	Beaufort	91.31
	Bertie	80.95
	Bladen	89.01
	Brunswick	104.66
	Buncombe	265.63
	Burke	152.21
	Cabarrus	232.52
	Caldwell	121.16
	Camden	84.96
	Carteret	121.11

APPENDIX A TO PART 11—FEE SCHEDULE FOR FY 2022—Continued

State	County	Fee/acre/yr
	Caswell	86.53
	Catawba	174.69
	Chatham	146.98
	Cherokee	130.98
	Chowan	93.29
	Clay	167.59
	Cleveland	124.52
	Columbus	87.14
	Craven	105.11
	Cumberland	137.93
	Currituck	130.98
	Dare	112.32
	Davidson	154.77
	Davie	135.87
	Duplin	128.10
	Durham	284.50
	Edgecombe	81.40
	Forsyth	248.49
	Franklin	94.94
	Gaston	163.96
	Gates	96.78
	Graham	127.83
	Granville	93.02
	Greene	105.33
	Guilford	218.34
	Halifax	68.51
	Harnett	148.85
	Haywood	172.50
	Henderson	207.08
	Hertford	85.41
	Hoke	117.53
	Hyde	79.40
	Iredell	145.19
	Jackson	218.80
	Johnston	126.58
	Jones	108.24
	Lee	153.89
	Lenoir	106.26
	Lincoln	153.01
	Macon	212.68
	Madison	132.40
	Martin	71.50
	McDowell	140.38
	Mecklenburg	915.45
	Mitchell	155.25
	Montgomery	126.63
	Moore	136.19
	Nash	123.54
	New Hanover	908.80
	Northampton	74.68
	Onslow	167.78
	Orange	178.51
	Pamlico	97.50
	Pasquotank	106.37
	Pender	142.81
	Perquimans	95.05
	Person	100.87
	Pitt	102.66
	Polk	171.99
	Randolph	134.88
	Richmond	116.54
	Robeson	88.51
	Rockingham	103.40
	Rowan	156.19
	Rutherford	127.67
	Sampson	130.58
	Scotland	96.12
	Stanly	122.79
	Stokes	109.04
	Surry	119.37
	Swain	97.66
	Transylvania	206.52
	Tyrrell	110.75
	Union	142.46
	Vance	79.51
	Wake	311.25
	Warren	77.67
	Washington	97.93
	Watauga	171.91
	Wayne	133.23

APPENDIX A TO PART 11—FEE SCHEDULE FOR FY 2022—Continued

State	County	Fee/acre/yr
	Wilkes	136.80
	Wilson	101.03
	Yadkin	146.07
	Yancey	145.40
North Dakota	Adams	29.14
	Barnes	63.10
	Benson	37.35
	Billings	25.09
	Bottineau	42.21
	Bowman	28.07
	Burke	28.78
	Burleigh	51.88
	Cass	101.52
	Cavalier	56.80
	Dickey	64.85
	Divide	29.19
	Dunn	31.32
	Eddy	39.73
	Emmons	43.28
	Foster	54.83
	Golden Valley	28.73
	Grand Forks	93.14
	Grant	29.24
	Griggs	48.52
	Hettinger	38.36
	Kidder	34.35
	LaMoure	69.33
	Logan	32.52
	McHenry	29.74
	McIntosh	37.24
	McKenzie	28.02
	McLean	48.74
	Mercer	37.35
	Morton	38.34
	Mountrail	34.90
	Nelson	37.14
	Oliver	39.40
	Pembina	75.28
	Pierce	38.47
	Ramsey	49.40
	Ransom	54.94
	Renville	43.83
	Richland	87.08
	Rolette	34.95
	Sargent	76.10
	Sheridan	29.98
	Sioux	33.94
	Slope	28.86
	Stark	36.34
	Steele	59.99
	Stutsman	54.75
	Towner	37.82
	Traill	84.21
	Walsh	68.62
	Ward	44.59
	Wells	46.72
	Williams	29.93
Ohio	Adams	105.69
	Allen	197.55
	Ashland	165.40
	Ashtabula	119.06
	Athens	87.48
	Auglaize	221.65
	Belmont	104.25
	Brown	120.01
	Butler	224.75
	Carroll	128.23
	Champaign	195.21
	Clark	205.34
	Clermont	152.60
	Clinton	162.21
	Columbiana	157.07
	Coshocton	143.73
	Crawford	175.50
	Cuyahoga	444.17
	Darke	226.49
	Defiance	156.17
	Delaware	213.02
	Erie	178.17
	Fairfield	209.69

APPENDIX A TO PART 11—FEE SCHEDULE FOR FY 2022—Continued

State	County	Fee/acre/yr
	Fayette	194.45
	Franklin	218.92
	Fulton	190.17
	Gallia	85.57
	Geauga	197.25
	Greene	194.39
	Guernsey	101.34
	Hamilton	361.92
	Hancock	164.50
	Hardin	160.31
	Harrison	90.12
	Henry	178.33
	Highland	136.70
	Hocking	123.25
	Holmes	210.76
	Huron	165.62
	Jackson	76.61
	Jefferson	148.76
	Knox	164.64
	Lake	222.22
	Lawrence	89.49
	Licking	180.13
	Logan	164.74
	Lorain	203.76
	Lucas	225.35
	Madison	188.79
	Mahoning	180.40
	Marion	158.95
	Medina	213.26
	Meigs	94.39
	Mercer	263.36
	Miami	202.04
	Monroe	88.97
	Montgomery	196.41
	Morgan	94.15
	Morrow	163.41
	Muskingum	111.65
	Noble	83.80
	Ottawa	147.27
	Paulding	170.44
	Perry	124.53
	Pickaway	164.25
	Pike	113.15
	Portage	177.27
	Preble	174.16
	Putnam	182.25
	Richland	204.33
	Ross	124.78
	Sandusky	161.34
	Scioto	85.44
	Seneca	160.33
	Shelby	209.31
	Stark	251.68
	Summit	363.88
	Trumbull	117.92
	Tuscarawas	151.24
	Union	172.89
	Van Wert	204.03
	Vinton	86.20
	Warren	213.02
	Washington	86.82
	Wayne	243.40
	Williams	140.51
	Wood	181.30
	Wyandot	155.35
Oklahoma	Adair	64.17
	Alfalfa	45.69
	Atoka	49.20
	Beaver	24.09
	Beckham	35.74
	Blaine	43.68
	Bryan	60.82
	Caddo	46.47
	Canadian	63.02
	Carter	54.46
	Cherokee	66.61
	Choctaw	47.59
	Cimarron	22.13
	Cleveland	130.14
	Coal	48.85

APPENDIX A TO PART 11—FEE SCHEDULE FOR FY 2022—Continued

State	County	Fee/acre/yr
	Comanche	51.73
	Cotton	36.46
	Craig	56.47
	Creek	58.83
	Custer	38.95
	Delaware	73.21
	Dewey	36.78
	Ellis	26.67
	Garfield	46.57
	Garvin	51.43
	Grady	56.29
	Grant	43.06
	Greer	31.01
	Harmon	33.59
	Harper	29.54
	Haskell	51.03
	Hughes	42.79
	Jackson	37.51
	Jefferson	41.48
	Johnston	50.22
	Kay	44.13
	Kingfisher	51.59
	Kiowa	33.64
	Latimer	48.18
	Le Flore	58.00
	Lincoln	60.12
	Logan	60.10
	Love	65.86
	Major	39.81
	Marshall	64.98
	Mayes	74.58
	McClain	70.72
	McCurtain	57.44
	McIntosh	51.00
	Murray	57.36
	Muskogee	60.52
	Noble	47.73
	Nowata	55.35
	Okfuskee	45.96
	Oklahoma	173.85
	Okmulgee	59.34
	Osage	42.71
	Ottawa	74.48
	Pawnee	47.84
	Payne	64.95
	Pittsburg	47.00
	Pontotoc	58.16
	Pottawatomie	60.47
	Pushmataha	41.37
	Roger Mills	34.39
	Rogers	78.07
	Seminole	48.91
	Sequoyah	58.78
	Stephens	47.19
	Texas	27.18
	Tillman	35.60
	Tulsa	156.38
	Wagoner	76.00
	Washington	63.15
	Washita	39.87
	Woods	35.57
	Woodward	32.62
Oregon	Baker	23.74
	Benton	122.26
	Clackamas	408.55
	Clatsop	135.84
	Columbia	164.34
	Coos	57.88
	Crook	18.14
	Curry	67.24
	Deschutes	164.59
	Douglas	64.83
	Gilliam	13.67
	Grant	19.65
	Harney	12.95
	Hood River	264.46
	Jackson	161.30
	Jefferson	16.24
	Josephine	341.67
	Klamath	41.57

APPENDIX A TO PART 11—FEE SCHEDULE FOR FY 2022—Continued

State	County	Fee/acre/yr
	Lake	20.53
	Lane	162.48
	Lincoln	104.41
	Linn	134.68
	Malheur	28.26
	Marion	234.85
	Morrow	21.40
	Multnomah	396.50
	Polk	135.13
	Sherman	16.14
	Tillamook	148.05
	Umatilla	34.64
	Union	34.41
	Wallowa	30.99
	Wasco	17.30
	Washington	324.71
	Wheeler	17.19
	Yamhill	193.28
Pennsylvania	Adams	185.82
	Allegheny	236.55
	Armstrong	98.33
	Beaver	163.26
	Bedford	109.99
	Berks	302.47
	Blair	182.06
	Bradford	97.76
	Bucks	253.87
	Butler	142.78
	Cambria	124.97
	Cameron	76.74
	Carbon	178.61
	Centre	180.80
	Chester	327.59
	Clarion	86.62
	Clearfield	97.36
	Clinton	176.42
	Columbia	162.69
	Crawford	90.16
	Cumberland	205.43
	Dauphin	237.22
	Delaware	388.44
	Elk	113.28
	Erie	121.73
	Fayette	111.74
	Forest	132.22
	Franklin	203.14
	Fulton	112.66
	Greene	98.33
	Huntingdon	129.90
	Indiana	97.14
	Jefferson	89.43
	Juniata	175.99
	Lackawanna	143.04
	Lancaster	493.41
	Lawrence	118.41
	Lebanon	388.58
	Lehigh	211.80
	Luzerne	163.61
	Lycoming	138.13
	McKean	76.85
	Mercer	107.86
	Mifflin	166.74
	Monroe	158.99
	Montgomery	522.42
	Montour	173.83
	Northampton	202.49
	Northumberland	158.45
	Perry	178.88
	Philadelphia	1,584.29
	Pike	60.07
	Potter	92.53
	Schuylkill	179.31
	Snyder	197.85
	Somerset	86.97
	Sullivan	110.39
	Susquehanna	127.91
	Tioga	102.46
	Union	259.02
	Venango	102.46
	Warren	93.39

APPENDIX A TO PART 11—FEE SCHEDULE FOR FY 2022—Continued

State	County	Fee/acre/yr
	Washington	175.70
	Wayne	115.87
	Westmoreland	159.45
	Wyoming	111.82
	York	221.30
Puerto Rico	All Areas	146.16
Rhode Island	Bristol	1,028.81
	Kent	323.01
	Newport	556.95
	Providence	325.31
	Washington	310.53
South Carolina	Abbeville	82.04
	Aiken	99.82
	Allendale	58.46
	Anderson	150.38
	Bamberg	77.69
	Barnwell	73.80
	Beaufort	95.98
	Berkeley	70.83
	Calhoun	80.85
	Charleston	248.26
	Cherokee	89.14
	Chester	88.05
	Chesterfield	78.22
	Clarendon	60.26
	Colleton	80.29
	Darlington	68.79
	Dillon	60.71
	Dorchester	74.49
	Edgefield	93.46
	Fairfield	75.97
	Florence	83.89
	Georgetown	54.14
	Greenville	243.47
	Greenwood	90.52
	Hampton	64.63
	Horry	119.51
	Jasper	97.01
	Kershaw	81.85
	Lancaster	104.72
	Laurens	101.60
	Lee	64.02
	Lexington	146.62
	Marion	61.77
	Marlboro	51.06
	McCormick	53.10
	Newberry	87.82
	Oconee	169.19
	Orangeburg	79.97
	Pickens	186.81
	Richland	127.11
	Saluda	81.96
	Spartanburg	218.11
	Sumter	79.36
	Union	67.15
	Williamsburg	59.49
	York	184.93
South Dakota	Aurora	72.16
	Beadle	73.22
	Bennett	25.89
	Bon Homme	108.33
	Brookings	125.13
	Brown	91.42
	Brule	70.10
	Buffalo	42.01
	Butte	26.08
	Campbell	49.79
	Charles Mix	75.81
	Clark	85.65
	Clay	127.85
	Codington	94.27
	Corson	24.99
	Custer	43.40
	Davison	92.39
	Day	71.92
	Deuel	93.75
	Dewey	26.37
	Douglas	101.18
	Edmunds	66.89
	Fall River	19.47

APPENDIX A TO PART 11—FEE SCHEDULE FOR FY 2022—Continued

State	County	Fee/acre/yr
	Faulk	69.25
	Grant	101.39
	Gregory	51.09
	Haakon	25.10
	Hamlin	106.75
	Hand	55.90
	Hanson	117.52
	Harding	18.08
	Hughes	51.42
	Hutchinson	122.22
	Hyde	41.52
	Jackson	23.79
	Jerauld	65.01
	Jones	31.08
	Kingsbury	103.60
	Lake	139.24
	Lawrence	48.64
	Lincoln	187.78
	Lyman	44.89
	Marshall	76.51
	McCook	118.74
	McPherson	58.57
	Meade	25.86
	Mellette	26.24
	Miner	96.06
	Minnehaha	175.35
	Moody	158.25
	Pennington	18.32
	Perkins	28.77
	Potter	22.60
	Roberts	57.48
	Sanborn	81.76
	Shannon	77.68
	Spink	85.16
	Stanley	25.04
	Sully	58.57
	Todd	23.11
	Tripp	44.05
	Turner	136.47
	Union	159.75
	Walworth	53.84
	Yankton	120.24
	Ziebach	23.25
Tennessee	Anderson	148.77
	Bedford	113.44
	Benton	67.76
	Bledsoe	93.78
	Blount	175.21
	Bradley	165.11
	Campbell	112.65
	Cannon	97.65
	Carroll	74.46
	Carter	141.53
	Cheatham	124.06
	Chester	69.15
	Claiborne	85.15
	Clay	90.73
	Cocke	120.52
	Coffee	111.75
	Crockett	91.61
	Cumberland	110.06
	Davidson	244.41
	Decatur	60.14
	DeKalb	92.12
	Dickson	114.36
	Dyer	91.58
	Fayette	91.82
	Fentress	94.52
	Franklin	111.64
	Gibson	96.40
	Giles	89.16
	Grainger	103.39
	Greene	122.31
	Grundy	94.16
	Hamblen	149.92
	Hamilton	268.15
	Hancock	72.47
	Hardeman	62.31
	Hardin	60.76
	Hawkins	101.46

APPENDIX A TO PART 11—FEE SCHEDULE FOR FY 2022—Continued

State	County	Fee/acre/yr
	Haywood	90.35
	Henderson	68.66
	Henry	90.49
	Hickman	85.86
	Houston	88.01
	Humphreys	75.76
	Jackson	84.53
	Jefferson	140.17
	Johnson	108.16
	Knox	268.01
	Lake	95.58
	Lauderdale	92.15
	Lawrence	89.73
	Lewis	77.83
	Lincoln	99.72
	Loudon	154.90
	Macon	102.44
	Madison	88.83
	Marion	88.58
	Marshall	95.23
	Maury	109.90
	McMinn	127.02
	McNairy	59.97
	Meigs	90.57
	Monroe	115.75
	Montgomery	133.86
	Moore	98.57
	Morgan	83.25
	Obion	97.98
	Overton	91.85
	Perry	60.33
	Pickett	95.31
	Polk	111.97
	Putnam	126.56
	Rhea	117.36
	Roane	143.36
	Robertson	143.87
	Rutherford	200.39
	Scott	72.71
	Sequatchie	105.19
	Sevier	166.44
	Shelby	142.57
	Smith	93.95
	Stewart	72.14
	Sullivan	192.33
	Sumner	144.61
	Tipton	89.56
	Trousdale	93.43
	Unicoi	194.51
	Union	111.40
	Van Buren	91.20
	Warren	94.08
	Washington	214.27
	Wayne	64.44
	Weakley	98.44
	White	103.88
	Williamson	165.00
	Wilson	133.69
Texas	Anderson	73.70
	Andrews	20.45
	Angelina	94.69
	Aransas	43.76
	Archer	38.62
	Armstrong	24.14
	Atascosa	59.33
	Austin	101.50
	Bailey	22.14
	Bandera	65.77
	Bastrop	106.91
	Baylor	26.82
	Bee	53.19
	Bell	85.29
	Bexar	154.33
	Blanco	77.49
	Borden	22.95
	Bosque	64.52
	Bowie	78.04
	Brazoria	121.64
	Brazos	147.83
	Brewster	17.70

APPENDIX A TO PART 11—FEE SCHEDULE FOR FY 2022—Continued

State	County	Fee/acre/yr
	Briscoe	23.21
	Brooks	40.33
	Brown	62.65
	Burleson	89.05
	Burnet	77.02
	Caldwell	99.29
	Calhoun	55.71
	Callahan	45.01
	Cameron	92.51
	Camp	85.60
	Carson	35.31
	Cass	60.94
	Castro	35.86
	Chambers	61.51
	Cherokee	80.74
	Childress	24.04
	Clay	50.00
	Cochran	24.06
	Coke	25.00
	Coleman	42.69
	Collin	258.46
	Collingsworth	26.35
	Colorado	78.19
	Comal	88.74
	Comanche	68.58
	Concho	38.33
	Cooke	85.94
	Coryell	67.72
	Cottle	28.84
	Crane	22.04
	Crockett	21.10
	Crosby	25.21
	Culberson	19.13
	Dallam	29.47
	Dallas	210.41
	Dawson	27.03
	Deaf Smith	29.31
	Delta	51.14
	Denton	248.17
	DeWitt	79.83
	Dickens	27.68
	Dimmit	36.64
	Donley	22.48
	Duval	44.10
	Eastland	51.04
	Ector	30.09
	Edwards	30.40
	El Paso	104.33
	Ellis	83.44
	Erath	82.27
	Falls	65.30
	Fannin	74.66
	Fayette	104.78
	Fisher	29.39
	Floyd	26.14
	Foard	29.00
	Fort Bend	80.63
	Franklin	80.56
	Freestone	66.65
	Frio	48.02
	Gaines	30.01
	Galveston	137.70
	Garza	26.12
	Gillespie	78.97
	Glasscock	23.88
	Goliad	69.07
	Gonzales	82.64
	Gray	29.73
	Grayson	175.92
	Gregg	146.79
	Grimes	99.97
	Guadalupe	101.16
	Hale	33.81
	Hall	23.88
	Hamilton	65.22
	Hansford	34.87
	Hardeman	27.13
	Hardin	81.26
	Harris	224.39
	Harrison	68.29

APPENDIX A TO PART 11—FEE SCHEDULE FOR FY 2022—Continued

State	County	Fee/acre/yr
	Hartley	32.25
	Haskell	27.34
	Hays	253.96
	Hemphill	28.95
	Henderson	82.84
	Hidalgo	112.23
	Hill	65.72
	Hockley	26.19
	Hood	89.08
	Hopkins	75.83
	Houston	72.53
	Howard	24.04
	Hudspeth	23.47
	Hunt	80.40
	Hutchinson	25.15
	Irion	25.86
	Jack	60.63
	Jackson	75.62
	Jasper	83.34
	Jeff Davis	17.85
	Jefferson	61.20
	Jim Hogg	45.14
	Jim Wells	53.76
	Johnson	102.67
	Jones	29.65
	Karnes	63.56
	Kaufman	78.22
	Kendall	80.45
	Kenedy	19.15
	Kent	22.27
	Kerr	64.89
	Kimble	51.76
	King	18.01
	Kinney	32.25
	Kleberg	34.30
	Knox	28.95
	La Salle	41.16
	Lamar	65.15
	Lamb	32.38
	Lampasas	73.49
	Lavaca	91.24
	Lee	95.52
	Leon	78.92
	Liberty	78.17
	Limestone	47.87
	Lipscomb	29.21
	Live Oak	56.10
	Llano	68.08
	Loving	4.96
	Lubbock	44.23
	Lynn	26.17
	Madison	77.85
	Marion	52.05
	Martin	23.13
	Mason	60.24
	Matagorda	62.29
	Maverick	36.51
	McCulloch	51.22
	McLennan	93.76
	McMullen	47.19
	Medina	69.49
	Menard	38.51
	Midland	41.81
	Milam	82.19
	Mills	65.20
	Mitchell	25.91
	Montague	70.99
	Montgomery	296.60
	Moore	29.47
	Morris	59.33
	Motley	22.01
	Nacogdoches	75.23
	Navarro	61.04
	Newton	57.71
	Nolan	28.64
	Nueces	79.31
	Ochiltree	32.01
	Oldham	21.18
	Orange	120.03
	Palo Pinto	63.41

APPENDIX A TO PART 11—FEE SCHEDULE FOR FY 2022—Continued

State	County	Fee/acre/yr
	Panola	69.38
	Parker	111.64
	Parmer	29.23
	Pecos	17.98
	Polk	78.24
	Potter	26.40
	Presidio	20.35
	Rains	90.41
	Randall	41.11
	Reagan	21.78
	Real	49.92
	Red River	50.07
	Reeves	13.67
	Refugio	32.48
	Roberts	19.78
	Robertson	75.07
	Rockwall	143.86
	Runnels	35.94
	Rusk	66.55
	Sabine	58.62
	San Augustine	73.28
	San Jacinto	106.54
	San Patricio	68.86
	San Saba	63.64
	Schleicher	30.69
	Scurry	27.18
	Shackelford	33.52
	Shelby	91.13
	Sherman	37.19
	Smith	136.37
	Somervell	81.41
	Starr	47.66
	Stephens	45.45
	Sterling	17.62
	Stonewall	23.75
	Sutton	33.00
	Swisher	27.18
	Tarrant	158.62
	Taylor	53.35
	Terrell	19.52
	Terry	26.48
	Throckmorton	36.59
	Titus	65.48
	Tom Green	40.85
	Travis	162.57
	Trinity	68.71
	Tyler	88.66
	Upshur	89.47
	Upton	21.00
	Uvalde	33.76
	Val Verde	26.19
	Van Zandt	95.45
	Victoria	75.88
	Walker	95.60
	Waller	121.35
	Ward	27.65
	Washington	124.24
	Webb	44.51
	Wharton	75.41
	Wheeler	28.30
	Wichita	38.30
	Wilbarger	33.24
	Willacy	45.66
	Williamson	96.72
	Wilson	82.48
	Winkler	29.13
	Wise	101.24
	Wood	87.36
	Yoakum	24.40
	Young	43.94
	Zapata	36.69
	Zavala	45.24
Utah	Beaver	25.35
	Box Elder	17.46
	Cache	55.04
	Carbon	14.10
	Daggett	31.62
	Davis	106.19
	Duchesne	11.11
	Emery	23.93

APPENDIX A TO PART 11—FEE SCHEDULE FOR FY 2022—Continued

State	County	Fee/acre/yr
	Garfield	35.61
	Grand	9.38
	Iron	22.26
	Juab	15.11
	Kane	20.66
	Millard	23.26
	Morgan	25.05
	Piute	23.70
	Rich	9.94
	Salt Lake	110.26
	San Juan	4.18
	Sanpete	32.11
	Sevier	48.76
	Summit	37.18
	Tooele	15.66
	Uintah	7.17
	Utah	99.46
	Wasatch	63.28
	Washington	42.56
	Wayne	51.69
	Weber	106.12
Vermont	Addison	89.60
	Bennington	128.05
	Caledonia	85.73
	Chittenden	171.60
	Essex	52.55
	Franklin	83.80
	Grand Isle	115.63
	Lamoille	93.66
	Orange	98.90
	Orleans	72.75
	Rutland	74.18
	Washington	115.07
	Windham	134.63
	Windsor	103.84
Virginia	Accomack	115.64
	Albemarle	268.01
	Alleghany	114.20
	Amelia	83.83
	Amherst	126.09
	Appomattox	83.83
	Arlington	8,073.86
	Augusta	189.63
	Bath	99.62
	Bedford	119.18
	Bland	93.36
	Botetourt	113.74
	Brunswick	68.11
	Buchanan	65.51
	Buckingham	101.09
	Campbell	83.61
	Caroline	100.14
	Carroll	87.21
	Charles City	91.39
	Charlotte	71.01
	Chesapeake City	158.44
	Chesterfield	249.69
	Clarke	190.90
	Craig	81.01
	Culpeper	155.71
	Cumberland	103.12
	Dickenson	76.40
	Dinwiddie	83.12
	Essex	86.54
	Fairfax	455.33
	Fauquier	199.38
	Floyd	103.01
	Fluvanna	116.91
	Franklin	97.59
	Frederick	195.70
	Giles	83.26
	Gloucester	127.80
	Goochland	147.12
	Grayson	112.57
	Greene	176.95
	Greensville	73.48
	Halifax	71.82
	Hanover	136.42
	Henrico	164.35
	Henry	80.22

APPENDIX A TO PART 11—FEE SCHEDULE FOR FY 2022—Continued

State	County	Fee/acre/yr
	Highland	86.64
	Isle of Wight	100.63
	James City	274.00
	King and Queen	91.49
	King George	138.47
	King William	109.62
	Lancaster	114.80
	Lee	71.69
	Loudoun	265.95
	Louisa	134.19
	Lunenburg	72.18
	Madison	161.18
	Mathews	115.91
	Mecklenburg	74.89
	Middlesex	107.48
	Montgomery	131.19
	Nelson	137.45
	New Kent	145.03
	Northampton	124.22
	Northumberland	81.44
	Nottoway	85.99
	Orange	170.61
	Page	176.51
	Patrick	75.18
	Pittsylvania	76.81
	Powhatan	143.57
	Prince Edward	77.16
	Prince George	103.14
	Prince William	289.74
	Pulaski	95.31
	Rappahannock	186.70
	Richmond	107.15
	Roanoke	155.60
	Rockbridge	133.25
	Rockingham	239.61
	Russell	78.30
	Scott	71.45
	Shenandoah	159.42
	Smyth	79.38
	Southampton	83.64
	Spotsylvania	152.73
	Stafford	355.03
	Suffolk	111.81
	Surry	91.55
	Sussex	75.18
	Tazewell	74.13
	Virginia Beach City.	261.40
	Warren	204.50
	Washington	136.50
	Westmoreland	101.11
	Wise	83.91
	Wythe	106.23
	York	327.70
Washington	Adams	25.31
	Asotin	23.44
	Benton	69.08
	Chelan	272.90
	Clallam	226.27
	Clark	158.53
	Columbia	28.85
	Cowlitz	158.69
	Douglas	20.91
	Ferry	9.18
	Franklin	81.43
	Garfield	27.87
	Grant	60.62
	Grays Harbor	42.44
	Island	194.55
	Jefferson	134.87
	King	624.62
	Kitsap	623.13
	Kittitas	73.13
	Klickitat	31.51
	Lewis	106.34
	Lincoln	21.65
	Mason	151.72
	Okanogan	21.39
	Pacific	61.38
	Pend Oreille	47.23

APPENDIX A TO PART 11—FEE SCHEDULE FOR FY 2022—Continued

State	County	Fee/acre/yr
	Pierce	380.82
	San Juan	167.58
	Skagit	179.51
	Skamania	214.10
	Snohomish	342.58
	Spokane	66.06
	Stevens	27.80
	Thurston	210.52
	Wahkiakum	85.15
	Walla Walla	44.85
	Whatcom	297.60
	Whitman	30.94
	Yakima	48.82
West Virginia	Barbour	63.52
	Berkeley	145.52
	Boone	63.63
	Braxton	55.88
	Brooke	76.86
	Cabell	96.96
	Calhoun	49.60
	Clay	46.85
	Doddridge	57.92
	Fayette	79.25
	Gilmer	35.83
	Grant	71.33
	Greenbrier	70.90
	Hampshire	81.73
	Hancock	124.44
	Hardy	87.41
	Harrison	68.12
	Jackson	60.15
	Jefferson	159.78
	Kanawha	105.58
	Lewis	58.76
	Lincoln	50.14
	Logan	67.31
	Marion	80.64
	Marshall	70.38
	Mason	66.11
	McDowell	168.56
	Mercer	68.42
	Mineral	75.85
	Mingo	30.36
	Monongalia	123.24
	Monroe	72.42
	Morgan	142.39
	Nicholas	71.14
	Ohio	98.59
	Pendleton	61.21
	Pleasants	62.79
	Pocahontas	51.01
	Preston	74.73
	Putnam	77.97
	Raleigh	100.90
	Randolph	65.97
	Ritchie	49.11
	Roane	52.51
	Summers	61.81
	Taylor	83.66
	Tucker	77.89
	Tyler	52.04
	Upshur	71.96
	Wayne	54.66
	Webster	62.55
	Wetzel	52.42
	Wirt	49.19
	Wood	90.68
	Wyoming	91.06
Wisconsin	Adams	120.55
	Ashland	59.99
	Barron	91.82
	Bayfield	58.84
	Brown	228.13
	Buffalo	105.81
	Burnett	73.13
	Calumet	211.46
	Chippewa	95.58
	Clark	108.98
	Columbia	156.51
	Crawford	85.40

APPENDIX A TO PART 11—FEE SCHEDULE FOR FY 2022—Continued

State	County	Fee/acre/yr
	Dane	221.26
	Dodge	156.94
	Door	127.75
	Douglas	52.66
	Dunn	96.70
	Eau Claire	122.65
	Florence	67.86
	Fond du Lac	195.37
	Forest	65.15
	Grant	126.67
	Green	145.74
	Green Lake	153.61
	Iowa	130.62
	Iron	91.33
	Jackson	102.05
	Jefferson	165.27
	Juneau	99.47
	Kenosha	203.43
	Kewaunee	150.92
	La Crosse	133.93
	Lafayette	160.51
	Langlade	87.87
	Lincoln	87.04
	Manitowoc	183.26
	Marathon	127.59
	Marinette	104.12
	Marquette	112.15
	Menominee	46.62
	Milwaukee	239.76
	Monroe	106.53
	Oconto	111.88
	Oneida	109.17
	Outagamie	193.54
	Ozaukee	176.01
	Pepin	104.04
	Pierce	124.07
	Polk	94.99
	Portage	110.11
	Price	66.04
	Racine	206.30
	Richland	90.13
	Rock	176.95
	Rusk	66.73
	Sauk	112.98
	Sawyer	69.63
	Shawano	125.20
	Sheboygan	177.08
	St. Croix	125.90
	Taylor	78.82
	Trempealeau	106.29
	Vernon	104.30
	Vilas	158.79
	Walworth	186.19
	Washburn	84.00
	Washington	189.41
	Waukesha	147.89
	Waupaca	121.28
	Waushara	113.62
	Winnebago	187.21
	Wood	88.92
Wyoming	Albany	10.74
	Big Horn	23.35
	Campbell	8.32
	Carbon	8.08
	Converse	7.77
	Crook	14.38
	Fremont	18.72
	Goshen	12.67
	Hot Springs	9.12
	Johnson	8.64
	Laramie	12.46
	Lincoln	26.86
	Natrona	6.67
	Niobrara	9.21
	Park	21.95
	Platte	12.90
	Sheridan	17.98
	Sublette	24.26
	Sweetwater	4.35
	Teton	59.49

APPENDIX A TO PART 11—FEE SCHEDULE FOR FY 2022—Continued

State	County	Fee/acre/yr
	Uinta	15.75
	Washakie	17.18
	Weston	9.83

[FR Doc. 2022–01105 Filed 1–20–22; 8:45 am]

BILLING CODE 6717–01–P

DEPARTMENT OF HEALTH AND HUMAN SERVICES

Food and Drug Administration

21 CFR Part 886

[Docket No. FDA–2021–N–0993]

Medical Devices; Ophthalmic Devices; Classification of the Retinal Diagnostic Software Device

AGENCY: Food and Drug Administration, Department of Health and Human Services (HHS).

ACTION: Final amendment; final order.

SUMMARY: The Food and Drug Administration (FDA, Agency, or we) is classifying the retinal diagnostic software device into class II (special controls). The special controls that apply to the device type are identified in this order and will be part of the codified language for the retinal diagnostic software device's classification. We are taking this action because we have determined that classifying the device into class II (special controls) will provide a reasonable assurance of safety and effectiveness of the device. We believe this action will also enhance patients' access to beneficial innovative devices.

DATES: This order is effective January 21, 2022. The classification was applicable on April 11, 2018.

FOR FURTHER INFORMATION CONTACT: Elvin Ng, Center for Devices and Radiological Health, Food and Drug Administration, 10903 New Hampshire Ave., Bldg. 66, Rm. 1304, Silver Spring, MD 20993–0002, 240–402–4662, *Elvin.Ng@fda.hhs.gov.*

SUPPLEMENTARY INFORMATION:

I. Background

Upon request, FDA has classified the retinal diagnostic software device as class II (special controls), which we have determined will provide a reasonable assurance of safety and effectiveness. In addition, we believe this action will enhance patients' access to beneficial innovation, by placing the device into a lower device class than the automatic class III assignment.

The automatic assignment of class III occurs by operation of law and without any action by FDA, regardless of the level of risk posed by the new device. Any device that was not in commercial distribution before May 28, 1976, is automatically classified as, and remains within, class III and requires premarket approval unless and until FDA takes an action to classify or reclassify the device (see 21 U.S.C. 360c(f)(1)). We refer to these devices as ''postamendments devices'' because they were not in commercial distribution prior to the date of enactment of the Medical Device Amendments of 1976, which amended the Federal Food, Drug, and Cosmetic Act (FD&C Act).

FDA may take a variety of actions in appropriate circumstances to classify or reclassify a device into class I or II. We may issue an order finding a new device to be substantially equivalent under section 513(i) of the FD&C Act (see 21 U.S.C. 360c(i)) to a predicate device that does not require premarket approval. We determine whether a new device is substantially equivalent to a predicate device by means of the procedures for premarket notification under section 510(k) of the FD&C Act (21 U.S.C. 360(k)) and part 807 (21 CFR part 807).

FDA may also classify a device through ''De Novo'' classification, a common name for the process authorized under section 513(f)(2) of the FD&C Act. Section 207 of the Food and Drug Administration Modernization Act of 1997 established the first procedure for De Novo classification (Pub. L. 105–115). Section 607 of the Food and Drug Administration Safety and Innovation Act modified the De Novo application process by adding a second procedure (Pub. L. 112–144). A device sponsor may utilize either procedure for De Novo classification.

Under the first procedure, the person submits a 510(k) for a device that has not previously been classified. After receiving an order from FDA classifying the device into class III under section 513(f)(1) of the FD&C Act, the person then requests a classification under section 513(f)(2).

Under the second procedure, rather than first submitting a 510(k) and then a request for classification, if the person determines that there is no legally marketed device upon which to base a determination of substantial equivalence, that person requests a classification under section 513(f)(2) of the FD&C Act.

Under either procedure for De Novo classification, FDA shall classify the device by written order within 120 days. The classification will be according to the criteria under section 513(a)(1) of the FD&C Act. Although the device was automatically placed within class III, the De Novo classification is considered to be the initial classification of the device.

We believe this De Novo classification will enhance patients' access to beneficial innovation. When FDA classifies a device into class I or II via the De Novo process, the device can serve as a predicate for future devices of that type, including for 510(k)s (see section 513(f)(2)(B)(i)) of the FD&C Act). As a result, other device sponsors do not have to submit a De Novo request or premarket approval application to market a substantially equivalent device (see section 513(i) of the FD&C Act, defining ''substantial equivalence''). Instead, sponsors can use the less-burdensome 510(k) process, when necessary, to market their device.

II. De Novo Classification

On January 12, 2018, FDA received IDx, LLC's request for De Novo classification of the IDx-DR. FDA reviewed the request in order to classify the device under the criteria for classification set forth in section 513(a)(1) of the FD&C Act.

We classify devices into class II if general controls by themselves are insufficient to provide reasonable assurance of safety and effectiveness, but there is sufficient information to establish special controls that, in combination with the general controls, provide reasonable assurance of the safety and effectiveness of the device for its intended use (see 21 U.S.C. 360c(a)(1)(B)). After review of the information submitted in the request, we determined that the device can be classified into class II with the establishment of special controls. FDA has determined that these special controls, in addition to the general controls, will provide reasonable assurance of the safety and effectiveness of the device.

Therefore, on April 11, 2018, FDA issued an order to the requester classifying the device into class II. In this final order, FDA is codifying the classification of the device by adding 21 CFR 886.1100.[1] We have named the generic type of device retinal diagnostic software device, and it is identified as a prescription software device that incorporates an adaptive algorithm to evaluate ophthalmic images for diagnostic screening to identify retinal diseases or conditions.

FDA has identified the following risks to health associated specifically with this type of device and the measures required to mitigate these risks in table 1.

TABLE 1—RETINAL DIAGNOSTIC SOFTWARE DEVICE RISKS AND MITIGATION MEASURES

Identified risks	Mitigation measures
False positive results leading to additional unnecessary medical procedures. • Diagnostic software failure • Software failure	Clinical performance testing; Software verification, validation, and hazard analysis; and Protocol for technical specification changes.
False negative results leading to delay of further evaluation or treatment. • Diagnostic software failure • Software failure	Clinical performance testing; Software verification, validation, and hazard analysis; Protocol for technical specification changes; and Labeling.
Operator failure to provide images that meet input quality specifications.	Labeling, Training, and Human factors validation testing.

[1] FDA notes that the ACTION caption for this final order is styled as ''Final amendment; final order,'' rather than ''Final order.'' Beginning in December 2019, this editorial change was made to indicate that the document ''amends'' the Code of Federal Regulations. The change was made in accordance with the Office of Federal Register's (OFR) interpretations of the Federal Register Act (44 U.S.C. chapter 15), its implementing regulations (1 CFR 5.9 and parts 21 and 22), and the Document Drafting Handbook.

FDA has determined that special controls, in combination with the general controls, address these risks to health and provide reasonable assurance of safety and effectiveness. For a device to fall within this classification, and thus avoid automatic classification in class III, it would have to comply with the special controls named in this final order. The necessary special controls appear in the regulation codified by this order. This device is subject to premarket notification requirements under section 510(k) of the FD&C Act.

At the time of classification, retinal diagnostic software devices are for prescription use only. Prescription devices are exempt from the requirement for adequate directions for use for the layperson under section 502(f)(1) of the FD&C Act (21 U.S.C. 352(f)(1)) and 21 CFR 801.5, as long as the conditions of 21 CFR 801.109 are met.

III. Analysis of Environmental Impact

The Agency has determined under 21 CFR 25.34(b) that this action is of a type that does not individually or cumulatively have a significant effect on the human environment. Therefore, neither an environmental assessment nor an environmental impact statement is required.

IV. Paperwork Reduction Act of 1995

This final order establishes special controls that refer to previously approved collections of information found in other FDA regulations and guidance. These collections of information are subject to review by the Office of Management and Budget (OMB) under the Paperwork Reduction Act of 1995 (44 U.S.C. 3501–3521). The collections of information in the guidance document ''De Novo Classification Process (Evaluation of Automatic Class III Designation)'' have been approved under OMB control number 0910–0844; the collections of information in 21 CFR part 814, subparts A through E, regarding premarket approval, have been approved under OMB control number 0910–0231; the collections of information in part 807, subpart E, regarding premarket notification submissions, have been approved under OMB control number 0910–0120; the collections of information in 21 CFR part 820, regarding quality system regulation, have been approved under OMB control number 0910–0073; and the collections of information in 21 CFR part 801, regarding labeling, have been approved under OMB control number 0910–0485.

List of Subjects in 21 CFR Part 886

Medical devices, Ophthalmic goods and services.

Therefore, under the Federal Food, Drug, and Cosmetic Act and under authority delegated to the Commissioner of Food and Drugs, 21 CFR part 886 is amended as follows:

PART 886—OPHTHALMIC DEVICES

■ 1. The authority citation for part 886 continues to read as follows:

Authority: 21 U.S.C. 351, 360, 360c, 360e, 360j, 360*l*, 371.

■ 2. Add § 886.1100 to subpart B to read as follows:

§ 886.1100 Retinal diagnostic software device.

(a) *Identification.* A retinal diagnostic software device is a prescription software device that incorporates an adaptive algorithm to evaluate ophthalmic images for diagnostic screening to identify retinal diseases or conditions.

(b) *Classification.* Class II (special controls). The special controls for this device are:

(1) Software verification and validation documentation, based on a comprehensive hazard analysis, must fulfill the following:

(i) Software documentation must provide a full characterization of technical parameters of the software, including algorithm(s).

(ii) Software documentation must describe the expected impact of applicable image acquisition hardware characteristics on performance and associated minimum specifications.

(iii) Software documentation must include a cybersecurity vulnerability and management process to assure software functionality.

(iv) Software documentation must include mitigation measures to manage failure of any subsystem components with respect to incorrect patient reports and operator failures.

(2) Clinical performance data supporting the indications for use must be provided, including the following:

(i) Clinical performance testing must evaluate sensitivity, specificity, positive predictive value, and negative predictive value for each endpoint reported for the indicated disease or condition across the range of available device outcomes.

(ii) Clinical performance testing must evaluate performance under anticipated conditions of use.

(iii) Statistical methods must include the following:

(A) Where multiple samples from the same patient are used, statistical analysis must not assume statistical independence without adequate justification.

(B) Statistical analysis must provide confidence intervals for each performance metric.

(iv) Clinical data must evaluate the variability in output performance due to both the user and the image acquisition device used.

(3) A training program with instructions on how to acquire and process quality images must be provided.

(4) Human factors validation testing that evaluates the effect of the training program on user performance must be provided.

(5) A protocol must be developed that describes the level of change in device technical specifications that could significantly affect the safety or effectiveness of the device.

(6) Labeling must include:

(i) Instructions for use, including a description of how to obtain quality images and how device performance is affected by user interaction and user training;

(ii) The type of imaging data used, what the device outputs to the user, and whether the output is qualitative or quantitative;

(iii) Warnings regarding image acquisition factors that affect image quality;

(iv) Warnings regarding interpretation of the provided outcomes, including:

(A) A warning that the device is not to be used to screen for the presence of diseases or conditions beyond its indicated uses;

(B) A warning that the device provides a screening diagnosis only and that it is critical that the patient be advised to receive followup care; and

(C) A warning that the device does not treat the screened disease;

(v) A summary of the clinical performance of the device for each output, with confidence intervals; and

(vi) A summary of the clinical performance testing conducted with the device, including a description of the patient population and clinical environment under which it was evaluated.

Dated: January 14, 2022.

Lauren K. Roth,

Associate Commissioner for Policy.

[FR Doc. 2022–01147 Filed 1–20–22; 8:45 am]

BILLING CODE 4164–01–P

DEPARTMENT OF THE TREASURY

Office of Foreign Assets Control

31 CFR Part 501

Amendment of Applicable Schedule Amount

AGENCY: Office of Foreign Assets Control, Treasury.

ACTION: Final rule.

SUMMARY: The Department of the Treasury's Office of Foreign Assets Control (OFAC) is issuing this final rule to make a technical amendment to the definition of the term ''applicable schedule amount'' in its regulations. In recent years, OFAC has adjusted its civil monetary penalties (CMPs) as required by the Federal Civil Penalties Inflation Adjustment Act, as amended by the Federal Civil Penalties Inflation Adjustment Act Improvements Act of 2015. While OFAC's ''applicable schedule amount'' values are not civil monetary penalties that are required to be adjusted pursuant to such statute, OFAC is updating the definition of the term ''applicable schedule amount'' so that it will automatically rise with OFAC's CMPs, removing the necessity of updating the applicable schedule amount on an annual basis.

DATES: This rule is effective January 21, 2022.

FOR FURTHER INFORMATION CONTACT: OFAC: Assistant Director for Licensing, tel.: 202–622–2480; Assistant Director for Regulatory Affairs, tel.: 202–622–4855; or Assistant Director for Sanctions Compliance & Evaluation, tel.: 202–622–2490.

SUPPLEMENTARY INFORMATION:

Electronic Availability

This document and additional information concerning OFAC are available on OFAC's website: *www.treas.gov/ofac.*

Background

On September 8, 2008, OFAC issued as an interim final rule the ''Economic Sanctions Enforcement Guidelines'' (Enforcement Guidelines) as appendix A to the Reporting, Procedures and Penalties Regulations at 31 CFR part 501 (73 FR 51933, September 8, 2008). On November 9, 2009, OFAC re-issued as a final rule the Enforcement Guidelines (74 FR 57593, November 9, 2009). OFAC's Enforcement Guidelines provide a general framework for the enforcement of all economic sanctions programs administered by OFAC. Section V.B.2.a.ii. of the Enforcement Guidelines states that the base amount of a proposed civil penalty in a Pre-Penalty Notice shall be the ''applicable schedule amount,'' subject to certain caps noted in that section, where the case is deemed non-egregious and the apparent violation has come to OFAC's attention by means other than a voluntary self-disclosure. Section I.B. of the Enforcement Guidelines provides a definition of ''applicable schedule amount.''

Separately, as required by the Federal Civil Penalties Inflation Adjustment Act (1990 Pub. L. 101–410, 104 Stat. 890; 28 U.S.C. 2461 note), as amended by the Federal Civil Penalties Inflation Adjustment Act Improvements Act of 2015 (Pub. L. 114–74, 129 Stat. 599, 28 U.S.C. 2461 note) (the FCPIA Act), OFAC has adjusted its CMPs seven times since the FCPIA Act went into effect on November 2, 2015: An initial catch-up adjustment on August 1, 2016 (81 FR 43070, July 1, 2016); an additional initial catch-up adjustment related to CMPs for failure to comply with a requirement to furnish information, the late filing of a required report, and failure to maintain records that were inadvertently omitted from the August 1, 2016 initial catch-up adjustment on October 5, 2020 (85 FR 54911, September 3, 2020); and annual adjustments on February 10, 2017 (82 FR 10434, February 10, 2017); March 19, 2018 (83 FR 11876, March 19, 2018); June 14, 2019 (84 FR 27714, June 14, 2019); April 9, 2020 (85 FR 19884, April 9, 2020); and March 17, 2021 (86 FR 14534, March 17, 2021).

OFAC's applicable schedule amount values in the Enforcement Guidelines, while not required to be adjusted pursuant to the FCPIA Act, correspond in certain ways with OFAC's CMPs. As a result, OFAC issued final rules on August 11, 2020 (85 FR 48474, August 11, 2020) and April 12, 2021 (86 FR 18895, April 12, 2021) amending the definition of ''applicable schedule amount'' in section I.B. of appendix A to 31 CFR part 501 to adjust applicable schedule amount values for transactions valued at $200,000 or more to correspond with recent CMP adjustments required by the FCPIA Act.

By a separate rule, OFAC will publish its annual adjustment of CMPs pursuant to the FCPIA Act for 2022. Today, OFAC is amending the definition of ''applicable schedule amount'' in section I.B. of appendix A to 31 CFR part 501 to automatically adjust the applicable schedule amount value for transactions valued at $200,000 or more as new CMP adjustments are published. Specifically, OFAC is amending section I.B.7. such that in the case of transactions valued at $200,000 or more, the applicable schedule amount is equivalent to the statutory maximum civil penalty per violation of the International Emergency Economic Powers Act (50 U.S.C. 1701–1706, at 1705) listed in section V.B.2.a.v of appendix A to 31 CFR part 501. This change is not required pursuant to the FCPIA Act; however, OFAC is making this change to ensure the applicable schedule amount value continues to correspond appropriately to OFAC's CMPs as the CMPs are adjusted annually pursuant to the FCPIA Act. In addition, OFAC is making technical edits to the authority citation to conform to **Federal Register** guidance.

Public Participation

Because this final rule imposes no obligations on any person, but only amends OFAC's enforcement policy and procedures based on existing substantive rules, provisions of the Administrative Procedure Act (5 U.S.C. 553) requiring notice of proposed rulemaking, opportunity for public participation, and delay in effective date are inapplicable. Further, this final rule is not a significant regulatory action for purposes of Executive Order 12866 of September 30, 1993, ''Regulatory Planning and Review'' (58 FR 51735, October 4, 1993). Because no notice of proposed rulemaking is required for this rule, the Regulatory Flexibility Act (5 U.S.C. 601–612) does not apply.

Paperwork Reduction Act

The Paperwork Reduction Act does not apply because this rule does not impose information collection requirements that would require the approval of the Office of Management and Budget under 44 U.S.C. 3501 *et seq.*

List of Subjects in 31 CFR Part 501

Administrative practice and procedure, Banks, Banking, Blocking of assets, Exports, Foreign trade, Licensing, Penalties, Sanctions.

For the reasons set forth in the preamble, OFAC amends 31 CFR part 501 as follows:

PART 501—REPORTING, PROCEDURES AND PENALTIES REGULATIONS

■ 1. The authority citation for part 501 is revised to read as follows:

Authority: 8 U.S.C. 1189; 18 U.S.C. 2332d, 2339B; 19 U.S.C. 3901–3913; 21 U.S.C. 1901–1908; 22 U.S.C. 287c, 2370(a), 6009, 6032, 7205, 8501–8551; 31 U.S.C. 321(b); 50 U.S.C. 1701–1706, 4301–4341; Pub. L. 101–410, 104 Stat. 890, as amended (28 U.S.C. 2461 note).

■ 2. In appendix A to part 501, revise section I.B.7. to read as follows:

Appendix A to Part 501—Economic Sanctions Enforcement Guidelines.

* * * * *

1. Definitions

* * * * *

B. * * *

7. The statutory maximum civil penalty per violation of IEEPA listed in section V.B.2.a.v. of this appendix with respect to a transaction valued at $200,000 or more.

* * * * *

Andrea M. Gacki,

Director, Office of Foreign Assets Control.

[FR Doc. 2022–01081 Filed 1–20–22; 8:45 am]

BILLING CODE 4810–AL–P

DEPARTMENT OF THE TREASURY

Office of Foreign Assets Control

31 CFR Part 590

Transnational Criminal Organizations Sanctions Regulations

AGENCY: Office of Foreign Assets Control, Treasury.

ACTION: Final rule.

SUMMARY: The Department of the Treasury's Office of Foreign Assets Control (OFAC) is amending the Transnational Criminal Organizations Sanctions Regulations and reissuing them in their entirety to further implement a July 24, 2011 Executive order and a March 15, 2019 Executive order related to transnational criminal organizations. This final rule replaces the regulations that were published in abbreviated form on January 12, 2012 and amended on July 23, 2019, and includes additional interpretive guidance, definitions, general licenses, and other regulatory provisions that will provide further guidance to the public. Due to the number of regulatory sections being updated or added, OFAC is amending and reissuing the Transnational Criminal Organizations Sanctions Regulations in their entirety.

DATES: This rule is effective January 21, 2022.

FOR FURTHER INFORMATION CONTACT: OFAC: Assistant Director for Licensing, 202–622–2480; Assistant Director for Regulatory Affairs, 202–622–4855; or Assistant Director for Sanctions Compliance & Evaluation, 202–622–2490.

SUPPLEMENTARY INFORMATION:

Electronic Availability

This document and additional information concerning OFAC are available on OFAC's website: *www.treas.gov/ofac.*

Background

On January 12, 2012, OFAC issued the Transnational Criminal Organizations Sanctions Regulations, 31 CFR part 590 (77 FR 1864, January 12, 2012) (the ''Regulations''), to implement Executive Order (E.O.) 13581 of July 24, 2011, ''Blocking Property of Transnational Criminal Organizations'' (76 FR 44757, July 27, 2011), pursuant to authorities delegated to the Secretary of the Treasury in E.O. 13581. The Regulations were initially issued in abbreviated form for the purpose of providing immediate guidance to the public. OFAC amended the Regulations on July 23, 2019 (84 FR 35307, July 23, 2019) to implement E.O. 13863 of March 15, 2019, ''Taking Additional Steps to Address the National Emergency With Respect to Significant Transnational Criminal Organizations'' (84 FR 10255, March 19, 2019), which amended E.O. 13581. OFAC is amending and reissuing the Regulations as a more comprehensive set of regulations that includes additional interpretive guidance and definitions, general licenses, and other regulatory provisions that will provide further guidance to the public. Due to the number of regulatory sections being updated or added, OFAC is reissuing the Regulations in their entirety.

E.O. 13581

On July 24, 2011, the President, invoking the authority of, *inter alia,* the International Emergency Economic Powers Act (50 U.S.C. 1701 *et seq.*) (IEEPA), issued E.O. 13581. In E.O. 13581, the President found that the activities of significant transnational criminal organizations, such as those listed in the Annex to E.O. 13581, have reached such scope and gravity that they threaten the stability of international political and economic systems. The President further found that such organizations are becoming increasingly sophisticated and dangerous to the United States; they are increasingly entrenched in the operations of foreign governments and the international financial system, thereby weakening democratic institutions, degrading the rule of law, and undermining economic markets. The President stated these organizations facilitate and aggravate violent civil conflicts and increasingly facilitate the activities of other dangerous persons. The President determined that the activities of significant transnational criminal organizations constitute an unusual and extraordinary threat to the national security, foreign policy, and economy of the United States and declared a national emergency to deal with that threat.

Section 1(a) of E.O. 13581 blocks, with certain exceptions, all property and interests in property that are in the United States, that come within the United States, or that are or come within the possession or control of any United States person of: (i) The persons listed in the Annex to E.O. 13581; and (ii) any person determined by the Secretary of the Treasury, in consultation with the Attorney General and the Secretary of State: (A) To be a foreign person that constitutes a significant transnational criminal organization; (B) to have materially assisted, sponsored, or provided financial, material, or technological support for, or goods or services to or in support of any person whose property and interests in property are blocked pursuant to E.O. 13581; or (C) to be owned or controlled by, or to have acted or purported to act for or on behalf of, directly or indirectly, any person whose property and interests in property are blocked pursuant to E.O. 13581. The property and interests in property of the persons described above may not be transferred, paid, exported, withdrawn, or otherwise dealt in.

In Section 1(b) of E.O. 13581, the President determined that the making of donations of certain articles, such as food, clothing, and medicine, intended to be used to relieve human suffering, as specified in section 203(b)(2) of IEEPA (50 U.S.C. 1702(b)(2)), by, to, or for the benefit of any person whose property and interests in property are blocked pursuant to E.O. 13581 would seriously impair the President's ability to deal with the national emergency declared in E.O. 13581. The President therefore prohibited the donation of such items except to the extent provided by statutes, or in regulations, orders, directives, or licenses that may be issued pursuant to E.O. 13581.

Section 1(c) of E.O. 13581 provides that the prohibition on any transaction or dealing in blocked property or interests in property includes the making of any contribution or provision of funds, goods, or services by, to, or for the benefit of any person whose property and interests in property are blocked pursuant to E.O. 13581, and the receipt of any contribution or provision of funds, goods, or services from any such person.

Section 2 of E.O. 13581 prohibits any transaction by a United States person or within the United States that evades or avoids, has the purpose of evading or avoiding, causes a violation of, or attempts to violate any of the prohibitions set forth in E.O. 13581, as

well as any conspiracy formed to violate such prohibitions.

Section 3 of E.O. 13581 provides definitions for certain terms used in the order. As discussed further below, section 3 of E.O. 13581 was amended by E.O. 13863.

Section 5 of E.O. 13581 authorizes the Secretary of the Treasury, in consultation with the Attorney General and the Secretary of State, to take such actions, including the promulgation of rules and regulations, and to employ all powers granted to the President by IEEPA, as may be necessary to carry out the purposes of E.O. 13581. Section 5 of E.O. 13581 also provides that the Secretary of the Treasury may redelegate any of these functions to other officers and agencies of the U.S. Government.

E.O. 13863

On March 15, 2019, pursuant to, *inter alia,* IEEPA, the President issued E.O. 13863. In E.O. 13863, the President took additional steps to deal with the national emergency with respect to significant transnational criminal organizations declared in E.O. 13581, in view of the evolution of these organizations as well as the increasing sophistication of their activities, which threaten international political and economic systems and pose a direct threat to the safety and welfare of the United States and its citizens, and given the ability of these organizations to derive revenue through widespread illegal conduct, including acts of violence and abuse that exhibit a wanton disregard for human life as well as many other crimes enriching and empowering these organizations. E.O. 13863 amended E.O. 13581 by replacing subsection (3)(e) of E.O. 13581 in its entirety with a new definition of the term ''significant transnational criminal organization.'' OFAC incorporated this definition into the Regulations on July 23, 2019 (84 FR 35307, July 27, 2019). E.O. 13863 did not amend the Annex to E.O. 13581.

Current Regulatory Action

In furtherance of the purpose of E.O. 13581, as amended by E.O. 13863 (''amended E.O. 13581''), OFAC is reissuing the Regulations. The Regulations implement targeted sanctions that are directed at persons determined to meet the criteria set forth in § 590.201 of the Regulations, as well as sanctions that may be set forth in any future Executive orders issued pursuant to the national emergency declared in E.O. 13581.

Subpart A of the Regulations clarifies the relation of this part to other laws and regulations. Subpart B of the Regulations implements the prohibitions contained in sections 1 and 2 of amended E.O. 13581, as well as the prohibitions contained in any further Executive orders issued pursuant to the national emergency declared in E.O. 13581. *See, e.g.,* §§ 590.201 and 590.205. Persons subject to the blocking provisions of amended E.O. 13581, or any further Executive order issued pursuant to the national emergency declared in E.O. 13581, are referred to throughout the Regulations as ''persons whose property and interests in property are blocked pursuant to § 590.201'' and their names are published on OFAC's Specially Designated Nationals and Blocked Persons List (SDN List), which is accessible via OFAC's website. Those names also are published in the **Federal Register** as they are added to the SDN List.

Sections 590.202 and 590.203 of subpart B detail the effect of transfers of blocked property in violation of the Regulations and set forth the requirement to hold blocked funds, such as currency, bank deposits, or liquidated financial obligations, in interest-bearing blocked accounts. Section 590.204 of subpart B provides that all expenses incident to the maintenance of blocked tangible property shall be the responsibility of the owners and operators of such property, and that such expenses shall not be met from blocked funds, unless otherwise authorized. The section further provides that blocked property may, in OFAC's discretion, be sold or liquidated and the net proceeds placed in a blocked interest-bearing account in the name of the owner of the property.

Section 590.205 of subpart B prohibits any transaction by a U.S. person or within the United States that evades or avoids, has the purpose of evading or avoiding, causes a violation of, or attempts to violate any of the prohibitions set forth in § 590.201 of the Regulations, and any conspiracy formed to violate such prohibitions.

Section 590.206 of subpart B details transactions that are exempt from the prohibitions of the Regulations pursuant to section 203(b)(1) of IEEPA (50 U.S.C. 1702(b)(1)), which relates to personal communications.

In subpart C of the Regulations, new definitions are being added to other key terms used throughout the Regulations. Because these new definitions were inserted in alphabetical order, the definitions that were in the prior abbreviated set of regulations have been renumbered. The definition previously in § 590.316, as incorporated into the Regulations on July 23, 2019 (84 FR 35307, July 23, 2019), is being removed because the term is not used in the Regulations.

Similarly, in subpart D, which contains interpretive sections regarding the Regulations, certain provisions have been renumbered and others added to those in the prior abbreviated set of regulations. Section 590.411 of subpart D explains that the property and interests in property of an entity are blocked if the entity is directly or indirectly owned, whether individually or in the aggregate, 50 percent or more by one or more persons whose property and interests in property are blocked, whether or not the entity itself is incorporated into OFAC's SDN List.

Transactions otherwise prohibited by the Regulations but found to be consistent with U.S. policy may be authorized by one of the general licenses contained in subpart E of the Regulations or by a specific license issued pursuant to the procedures described in subpart E of 31 CFR part 501. General licenses and statements of licensing policy relating to this part also may be available through the Transnational Criminal Organizations sanctions page on OFAC's website: *www.treas.gov/ofac.*

OFAC is also incorporating several new general licenses into the Regulations, renumbering existing general licenses, and making technical edits to certain existing general licenses. Sections 590.506, 590.508, 590.510, and 590.11 authorize, respectively, certain transactions relating to the investment of certain funds, payments for legal services from funds originating outside the United States, official business of the United States Government, and official activities of certain international organizations and other international entities. Section 590.506 was renumbered as § 590.507 and § 590.507 was renumbered as § 590.509. In § 590.509, OFAC has removed the requirement that the receipt of payment for emergency medical services be specifically licensed.

Subpart F of the Regulations refers to subpart C of part 501 for recordkeeping and reporting requirements. Subpart G of the Regulations describes the civil and criminal penalties applicable to violations of the Regulations, as well as the procedures governing the potential imposition of a civil monetary penalty or issuance of a Finding of Violation. Subpart G also refers to appendix A of part 501 for a more complete description of these procedures.

Subpart H of the Regulations refers to subpart E of part 501 for applicable provisions relating to administrative procedures and contains a delegation of

certain authorities of the Secretary of the Treasury. Subpart I of the Regulations sets forth a Paperwork Reduction Act notice. Additionally, OFAC is removing from the authority citation the Hizballah International Financing Prevention Amendments Act of 2018, Public Law 115–272, 132 Stat. 4144 (50 U.S.C. 1701 note) (HIFPAA), as it is implemented in other parts of 31 CFR Chapter V.

Public Participation

Because the Regulations involve a foreign affairs function, the provisions of E.O. 12866 of September 30, 1993, ''Regulatory Planning and Review'' (58 FR 51735, October 4, 1993), and the Administrative Procedure Act (5 U.S.C. 553) requiring notice of proposed rulemaking, opportunity for public participation, and delay in effective date are inapplicable. Because no notice of proposed rulemaking is required for this rule, the Regulatory Flexibility Act (5 U.S.C. 601–612) does not apply.

Paperwork Reduction Act

The collections of information related to the Regulations are contained in 31 CFR part 501 (the ''Reporting, Procedures and Penalties Regulations''). Pursuant to the Paperwork Reduction Act of 1995 (44 U.S.C. 3507), those collections of information have been approved by the Office of Management and Budget under control number 1505–0164. An agency may not conduct or sponsor, and a person is not required to respond to, a collection of information unless the collection of information displays a valid control number.

List of Subjects in 31 CFR Part 590

Administrative practice and procedure, Banks, banking, Blocking of assets, Credit, Foreign trade, Penalties, Reporting and recordkeeping requirements, Transnational Criminal Organizations, Sanctions, Securities, Services.

■ For the reasons set forth in the preamble, OFAC revises 31 CFR part 590 to read as follows:

PART 590—TRANSNATIONAL CRIMINAL ORGANIZATIONS SANCTIONS REGULATIONS

Subpart A—Relation of This Part to Other Laws and Regulations

Sec.
590.101 Relation of this part to other laws and regulations.

Subpart B—Prohibitions

590.201 Prohibited transactions.
590.202 Effect of transfers violating the provisions of this part.
590.203 Holding of funds in interest-bearing accounts; investment and reinvestment.
590.204 Expenses of maintaining blocked tangible property; liquidation of blocked property.
590.205 Evasions; attempts; causing violations; conspiracies.
590.206 Exempt transactions.

Subpart C—General Definitions

590.300 Applicability of definitions.
590.301 Blocked account; blocked property.
590.302 Effective date.
590.303 Entity.
590.304 Financial, material, or technological support.
590.305 Foreign person.
590.306 [Reserved]
590.307 Interest.
590.308 Licenses; general and specific.
590.309 OFAC.
590.310 Person.
590.311 Property; property interest.
590.312 Significant transnational criminal organization.
590.313 Transfer.
590.314 United States.
590.315 United States person; U.S. person.
590.316 U.S. financial institution.

Subpart D—Interpretations

590.401 Reference to amended sections.
590.402 Effect of amendment.
590.403 Termination and acquisition of an interest in blocked property.
590.404 Transactions ordinarily incident to a licensed transaction.
590.405 Provision and receipt of services.
590.406 Offshore transactions involving blocked property.
590.407 Payments from blocked accounts to satisfy obligations prohibited.
590.408 Charitable contributions.
590.409 Credit extended and cards issued by financial institutions to a person whose property and interests in property are blocked.
590.410 Setoffs prohibited.
590.411 Entities owned by one or more persons whose property and interests in property are blocked.

Subpart E—Licenses, Authorizations, and Statements of Licensing Policy

590.501 General and specific licensing procedures.
590.502 Effect of license or other authorization.
590.503 Exclusion from licenses.
590.504 Payments and transfers to blocked accounts in U.S. financial institutions.
590.505 Entries in certain accounts for normal service charges.
590.506 Investment and reinvestment of certain funds.
590.507 Provision of certain legal services.
590.508 Payments for legal services from funds originating outside the United States.
590.509 Emergency medical services.
590.510 Official business of the United States Government.
590.511 Official business of certain international organizations and entities.

Subpart F—Reports

590.601 Records and reports.

Subpart G—Penalties and Findings of Violation

590.701 Penalties.
590.702 Pre-Penalty Notice; settlement.
590.703 Penalty imposition.
590.704 Administrative collection; referral to United States Department of Justice.
590.705 Findings of Violation.

Subpart H—Procedures

590.801 Procedures.
590.802 Delegation of certain authorities of the Secretary of the Treasury.

Subpart I—Paperwork Reduction Act

590.901 Paperwork Reduction Act notice.

Authority: 3 U.S.C. 301; 31 U.S.C. 321(b); 50 U.S.C. 1601–1651, 1701–1706; Pub. L. 101–410, 104 Stat. 890, as amended (28 U.S.C. 2461 note); E.O. 13581, 76 FR 44757, 3 CFR, 2011 Comp., p. 260; E.O. 13863, 84 FR 10255, 3 CFR, 2019 Comp., p. 267.

Subpart A—Relation of This Part to Other Laws and Regulations

§ 590.101 Relation of this part to other laws and regulations.

This part is separate from, and independent of, the other parts of this chapter, with the exception of part 501 of this chapter, the recordkeeping and reporting requirements and license application and other procedures of which apply to this part. Actions taken pursuant to part 501 of this chapter with respect to the prohibitions contained in this part are considered actions taken pursuant to this part. Differing foreign policy and national security circumstances may result in differing interpretations of similar language among the parts of this chapter. No license or authorization contained in or issued pursuant to those other parts authorizes any transaction prohibited by this part. No license or authorization contained in or issued pursuant to any other provision of law or regulation authorizes any transaction prohibited by this part. No license or authorization contained in or issued pursuant to this part relieves the involved parties from complying with any other applicable laws or regulations.

Subpart B—Prohibitions

§ 590.201 Prohibited transactions.

(a) All property and interests in property that are in the United States, that come within the United States, or that are or come within the possession or control of any U.S. person of the following persons are blocked and may not be transferred, paid, exported, withdrawn, or otherwise dealt in:

(1) The persons listed in the Annex to E.O. 13581 of July 24, 2011;

(2) Any person determined by the Secretary of the Treasury, in consultation with the Attorney General and the Secretary of State:

(i) To be a foreign person that constitutes a significant transnational criminal organization;

(ii) To have materially assisted, sponsored, or provided financial, material, or technological support for, or goods or services to or in support of, any person whose property and interests in property are blocked pursuant to paragraph (a) of this section; or

(iii) To be owned or controlled by, or to have acted or purported to act for or on behalf of, directly or indirectly, any person whose property and interests in property are blocked pursuant to paragraph (a) of this section.

(b) The prohibitions in paragraph (a) of this section include prohibitions on the following transactions:

(1) The making of any contribution or provision of funds, goods, or services by, to, or for the benefit of any person whose property and interests in property are blocked pursuant to paragraph (a) of this section; and

(2) The receipt of any contribution or provision of funds, goods, or services from any person whose property and interests in property are blocked pursuant to paragraph (a) of this section.

(c) Unless authorized by this part or by a specific license expressly referring to this part, any dealing in securities (or evidence thereof) held within the possession or control of a U.S. person and either registered or inscribed in the name of, or known to be held for the benefit of, or issued by, any person whose property and interests in property are blocked pursuant to paragraph (a) of this section is prohibited. This prohibition includes the transfer (including the transfer on the books of any issuer or agent thereof), disposition, transportation, importation, exportation, or withdrawal of, or the endorsement or guaranty of signatures on, any securities on or after the effective date. This prohibition applies irrespective of the fact that at any time (whether prior to, on, or subsequent to the effective date) the registered or inscribed owner of any such securities may have or might appear to have assigned, transferred, or otherwise disposed of the securities.

(d) The prohibitions in paragraph (a) of this section apply except to the extent provided by statutes, or in regulations, orders, directives, or licenses that may be issued pursuant to this part, and notwithstanding any contract entered into or any license or permit granted prior to the effective date.

(e) All transactions prohibited pursuant to any Executive order issued after March 15, 2019 pursuant to the national emergency declared in E.O. 13581 of July 24, 2011, are prohibited pursuant to this part.

Note 1 to § 590.201. The names of persons listed in, or designated or identified pursuant to, E.O. 13581; E.O. 13581, as amended by E.O. 13863 of March 15, 2019 (''amended E.O. 13581''); or any further Executive orders issued pursuant to the national emergency declared in E.O. 13581, whose property and interests in property therefore are blocked pursuant to this section, are published in the **Federal Register** and incorporated into OFAC's Specially Designated Nationals and Blocked Persons List (SDN List) using the following identifiers: For E.O. 13581 or amended E.O. 13581: ''[TCO]''; and for any further Executive orders issued pursuant to the national emergency declared in E.O. 13581: Using the identifier formulation ''[TCO–E.O.[E.O. number pursuant to which the person's property and interests in property are blocked]].'' The SDN List is accessible through the following page on OFAC's website: *www.treas.gov/sdn.* Additional information pertaining to the SDN List can be found in appendix A to this chapter. *See* § 590.411 concerning entities that may not be listed on the SDN List but whose property and interests in property are nevertheless blocked pursuant to this section.

Note 2 to § 590.201. The International Emergency Economic Powers Act (50 U.S.C. 1701–1706), in Section 203 (50 U.S.C. 1702), authorizes the blocking of property and interests in property of a person during the pendency of an investigation. The names of persons whose property and interests in property are blocked pending investigation pursuant to this section also are published in the **Federal Register** and incorporated into the SDN List using the following identifiers: For E.O. 13581 or amended E.O. 13581: ''[BPI–TCO]''; and for any further Executive orders issued pursuant to the national emergency declared in E.O. 13581: Using the identifier formulation ''[BPI–TCO–[E.O. number pursuant to which the person's property and interests in property are blocked pending investigation]].''

Note 3 to § 590.201. Sections 501.806 and 501.807 of this chapter describe the procedures to be followed by persons seeking, respectively, the unblocking of funds that they believe were blocked due to mistaken identity, or administrative reconsideration of their status as persons whose property and interests in property are blocked pursuant to this section.

§ 590.202 Effect of transfers violating the provisions of this part.

(a) Any transfer after the effective date that is in violation of any provision of this part or of any regulation, order, directive, ruling, instruction, or license issued pursuant to this part, and that involves any property or interest in property blocked pursuant to § 590.201, is null and void and shall not be the basis for the assertion or recognition of any interest in or right, remedy, power, or privilege with respect to such property or interest in property.

(b) No transfer before the effective date shall be the basis for the assertion or recognition of any right, remedy, power, or privilege with respect to, or any interest in, any property or interest in property blocked pursuant to § 590.201, unless the person who holds or maintains such property, prior to that date, had written notice of the transfer or by any written evidence had recognized such transfer.

(c) Unless otherwise provided, a license or other authorization issued by OFAC before, during, or after a transfer shall validate such transfer or make it enforceable to the same extent that it would be valid or enforceable but for the provisions of this part and any regulation, order, directive, ruling, instruction, or license issued pursuant to this part.

(d) Transfers of property that otherwise would be null and void or unenforceable by virtue of the provisions of this section shall not be deemed to be null and void or unenforceable as to any person with whom such property is or was held or maintained (and as to such person only) in cases in which such person is able to establish to the satisfaction of OFAC each of the following:

(1) Such transfer did not represent a willful violation of the provisions of this part by the person with whom such property is or was held or maintained (and as to such person only);

(2) The person with whom such property is or was held or maintained did not have reasonable cause to know or suspect, in view of all the facts and circumstances known or available to such person, that such transfer required a license or authorization issued pursuant to this part and was not so licensed or authorized, or, if a license or authorization did purport to cover the transfer, that such license or authorization had been obtained by misrepresentation of a third party or withholding of material facts or was otherwise fraudulently obtained; and

(3) The person with whom such property is or was held or maintained filed with OFAC a report setting forth in full the circumstances relating to such transfer promptly upon discovery that:

(i) Such transfer was in violation of the provisions of this part or any regulation, ruling, instruction, license, or other directive or authorization issued pursuant to this part;

(ii) Such transfer was not licensed or authorized by OFAC; or

(iii) If a license did purport to cover the transfer, such license had been obtained by misrepresentation of a third party or withholding of material facts or was otherwise fraudulently obtained.

(e) The filing of a report in accordance with the provisions of paragraph (d)(3) of this section shall not be deemed evidence that the terms of paragraphs (d)(1) and (2) of this section have been satisfied.

(f) Unless licensed pursuant to this part, any attachment, judgment, decree, lien, execution, garnishment, or other judicial process is null and void with respect to any property or interest in property blocked pursuant to § 590.201.

§ 590.203 Holding of funds in interest-bearing accounts; investment and reinvestment.

(a) Except as provided in paragraph (e) or (f) of this section, or as otherwise directed or authorized by OFAC, any U.S. person holding funds, such as currency, bank deposits, or liquidated financial obligations, subject to § 590.201 shall hold or place such funds in a blocked interest-bearing account located in the United States.

(b)(1) For the purposes of this section, the term *blocked interest-bearing account* means a blocked account:

(i) In a federally insured U.S. bank, thrift institution, or credit union, provided the funds are earning interest at rates that are commercially reasonable; or

(ii) With a broker or dealer registered with the Securities and Exchange Commission under the Securities Exchange Act of 1934 (15 U.S.C. 78a *et seq.*), provided the funds are invested in a money market fund or in U.S. Treasury bills.

(2) Funds held or placed in a blocked account pursuant to paragraph (a) of this section may not be invested in instruments the maturity of which exceeds 180 days.

(c) For the purposes of this section, a rate is commercially reasonable if it is the rate currently offered to other depositors on deposits or instruments of comparable size and maturity.

(d) For the purposes of this section, if interest is credited to a separate blocked account or subaccount, the name of the account party on each account must be the same.

(e) Blocked funds held in instruments the maturity of which exceeds 180 days at the time the funds become subject to § 590.201 may continue to be held until maturity in the original instrument, provided any interest, earnings, or other proceeds derived therefrom are paid into a blocked interest-bearing account in accordance with paragraph (a) or (f) of this section.

(f) Blocked funds held in accounts or instruments outside the United States at the time the funds become subject to § 590.201 may continue to be held in the same type of accounts or instruments, provided the funds earn interest at rates that are commercially reasonable.

(g) This section does not create an affirmative obligation for the holder of blocked tangible property, such as real or personal property, or of other blocked property, such as debt or equity securities, to sell or liquidate such property. However, OFAC may issue licenses permitting or directing such sales or liquidation in appropriate cases.

(h) Funds blocked pursuant to § 590.201 may not be held, invested, or reinvested in a manner that provides financial or economic benefit or access to any person whose property and interests in property are blocked pursuant to § 590.201, nor may their holder cooperate in or facilitate the pledging or other attempted use as collateral of blocked funds or other assets.

§ 590.204 Expenses of maintaining blocked tangible property; liquidation of blocked property.

(a) Except as otherwise authorized, and notwithstanding the existence of any rights or obligations conferred or imposed by any international agreement or contract entered into or any license or permit granted prior to the effective date, all expenses incident to the maintenance of tangible property blocked pursuant to § 590.201 shall be the responsibility of the owners or operators of such property, which expenses shall not be met from blocked funds.

(b) Property blocked pursuant to § 590.201 may, in the discretion of OFAC, be sold or liquidated and the net proceeds placed in a blocked interest-bearing account in the name of the owner of the property.

§ 590.205 Evasions; attempts; causing violations; conspiracies.

(a) Any transaction on or after the effective date that evades or avoids, has the purpose of evading or avoiding, causes a violation of, or attempts to violate any of the prohibitions set forth in this part is prohibited.

(b) Any conspiracy formed to violate the prohibitions set forth in this part is prohibited.

§ 590.206 Exempt transactions.

The prohibitions contained in this part do not apply to any postal, telegraphic, telephonic, or other personal communication that does not involve the transfer of anything of value.

Subpart C—General Definitions

§ 590.300 Applicability of definitions.

The definitions in this subpart apply throughout the entire part.

§ 590.301 Blocked account; blocked property.

The terms *blocked account* and *blocked property* mean any account or property subject to the prohibitions in § 590.201 held in the name of a person whose property and interests in property are blocked pursuant to § 590.201, or in which such person has an interest, and with respect to which payments, transfers, exportations, withdrawals, or other dealings may not be made or effected except pursuant to a license or other authorization from OFAC expressly authorizing such action.

Note 1 to § 590.301. *See* § 590.411 concerning the blocked status of property and interests in property of an entity that is directly or indirectly owned, whether individually or in the aggregate, 50 percent or more by one or more persons whose property and interests in property are blocked pursuant to § 590.201.

§ 590.302 Effective date.

(a) The term *effective date* refers to the effective date of the applicable prohibitions and directives contained in this part as follows:

(1) With respect to a person whose property and interests in property are blocked pursuant to § 590.201(a)(1), 12:01 a.m. eastern daylight time July 25, 2011; and

(2) With respect to a person whose property and interests in property are otherwise blocked pursuant to § 590.201, the earlier of the date of actual or constructive notice that such person's property and interests in property are blocked.

(b) For the purposes of this section, *constructive notice* is the date that a notice of the blocking of the relevant person's property and interests in property is published in the **Federal Register**.

§ 590.303 Entity.

The term *entity* means a partnership, association, trust, joint venture, corporation, group, subgroup, or other organization.

§ 590.304 Financial, material, or technological support.

The term *financial, material, or technological support,* as used in this part, means any property, tangible or intangible, including currency, financial

instruments, securities, or any other transmission of value; weapons or related materiel; chemical or biological agents; explosives; false documentation or identification; communications equipment; computers; electronic or other devices or equipment; technologies; lodging; safe houses; facilities; vehicles or other means of transportation; or goods. ''Technologies'' as used in this section means specific information necessary for the development, production, or use of a product, including related technical data such as blueprints, plans, diagrams, models, formulae, tables, engineering designs and specifications, manuals, or other recorded instructions.

§ 590.305 Foreign person.

The term *foreign person* means any citizen or national of a foreign state, or any entity organized under the laws of a foreign state or existing in a foreign state, including any such individual or entity who is also a United States person.

§ 590.306 [Reserved]

§ 590.307 Interest.

Except as otherwise provided in this part, the term *interest,* when used with respect to property (*e.g.,* ''an interest in property''), means an interest of any nature whatsoever, direct or indirect.

§ 590.308 Licenses; general and specific.

(a) Except as otherwise provided in this part, the term *license* means any license or authorization contained in or issued pursuant to this part.

(b) The term *general license* means any license or authorization the terms of which are set forth in subpart E of this part or made available on OFAC's website: *www.treas.gov/ofac.*

(c) The term *specific license* means any license or authorization issued pursuant to this part but not set forth in subpart E of this part or made available on OFAC's website: *www.treas.gov/ofac.*

Note 1 to § 590.306. *See* § 501.801 of this chapter on licensing procedures.

§ 590.309 OFAC.

The term *OFAC* means the Department of the Treasury's Office of Foreign Assets Control.

§ 590.310 Person.

The term *person* means an individual or entity.

§ 590.311 Property; property interest.

The terms *property* and *property interest* include money, checks, drafts, bullion, bank deposits, savings accounts, debts, indebtedness, obligations, notes, guarantees, debentures, stocks, bonds, coupons, any other financial instruments, bankers acceptances, mortgages, pledges, liens or other rights in the nature of security, warehouse receipts, bills of lading, trust receipts, bills of sale, any other evidences of title, ownership, or indebtedness, letters of credit and any documents relating to any rights or obligations thereunder, powers of attorney, goods, wares, merchandise, chattels, stocks on hand, ships, goods on ships, real estate mortgages, deeds of trust, vendors' sales agreements, land contracts, leaseholds, ground rents, real estate and any other interest therein, options, negotiable instruments, trade acceptances, royalties, book accounts, accounts payable, judgments, patents, trademarks or copyrights, insurance policies, safe deposit boxes and their contents, annuities, pooling agreements, services of any nature whatsoever, contracts of any nature whatsoever, and any other property, real, personal, or mixed, tangible or intangible, or interest or interests therein, present, future, or contingent.

§ 590.312 Significant transnational criminal organization.

The term *significant transnational criminal organization* means a group of persons that includes one or more foreign persons; that engages in or facilitates an ongoing pattern of serious criminal activity involving the jurisdictions of at least two foreign states, or one foreign state and the United States; and that threatens the national security, foreign policy, or economy of the United States.

§ 590.313 Transfer.

The term *transfer* means any actual or purported act or transaction, whether or not evidenced by writing, and whether or not done or performed within the United States, the purpose, intent, or effect of which is to create, surrender, release, convey, transfer, or alter, directly or indirectly, any right, remedy, power, privilege, or interest with respect to any property. Without limitation on the foregoing, it shall include the making, execution, or delivery of any assignment, power, conveyance, check, declaration, deed, deed of trust, power of attorney, power of appointment, bill of sale, mortgage, receipt, agreement, contract, certificate, gift, sale, affidavit, or statement; the making of any payment; the setting off of any obligation or credit; the appointment of any agent, trustee, or fiduciary; the creation or transfer of any lien; the issuance, docketing, filing, or levy of or under any judgment, decree, attachment, injunction, execution, or other judicial or administrative process or order, or the service of any garnishment; the acquisition of any interest of any nature whatsoever by reason of a judgment or decree of any foreign country; the fulfillment of any condition; the exercise of any power of appointment, power of attorney, or other power; or the acquisition, disposition, transportation, importation, exportation, or withdrawal of any security.

§ 590.314 United States.

The term *United States* means the United States, its territories and possessions, and all areas under the jurisdiction or authority thereof.

§ 590.315 United States person; U.S. person.

The term *United States person* or *U.S. person* means any United States citizen, permanent resident alien, entity organized under the laws of the United States or any jurisdiction within the United States (including foreign branches), or any person in the United States.

§ 590.316 U.S. financial institution.

The term *U.S. financial institution* means any U.S. entity (including its foreign branches) that is engaged in the business of accepting deposits, making, granting, transferring, holding, or brokering loans or other extensions of credit, or purchasing or selling foreign exchange, securities, commodity futures or options, or procuring purchasers and sellers thereof, as principal or agent. It includes depository institutions, banks, savings banks, trust companies, securities brokers and dealers, futures and options brokers and dealers, forward contract and foreign exchange merchants, securities and commodities exchanges, clearing corporations, investment companies, employee benefit plans, and U.S. holding companies, U.S. affiliates, or U.S. subsidiaries of any of the foregoing. This term includes those branches, offices, and agencies of foreign financial institutions that are located in the United States, but not such institutions' foreign branches, offices, or agencies.

Subpart D—Interpretations

§ 590.401 Reference to amended sections.

(a) Reference to any section in this part is a reference to the same as currently amended, unless the reference includes a specific date. *See* 44 U.S.C. 1510.

(b) Reference to any ruling, order, instruction, direction, or license issued pursuant to this part is a reference to the

same as currently amended unless otherwise so specified.

§ 590.402 Effect of amendment.

Unless otherwise specifically provided, any amendment, modification, or revocation of any provision in or appendix to this part or chapter or of any order, regulation, ruling, instruction, or license issued by OFAC does not affect any act done or omitted, or any civil or criminal proceeding commenced or pending, prior to such amendment, modification, or revocation. All penalties, forfeitures, and liabilities under any such order, regulation, ruling, instruction, or license continue and may be enforced as if such amendment, modification, or revocation had not been made.

§ 590.403 Termination and acquisition of an interest in blocked property.

(a) Whenever a transaction licensed or authorized by or pursuant to this part results in the transfer of property (including any property interest) away from a person whose property and interests in property are blocked pursuant to § 590.201, such property shall no longer be deemed to be property blocked pursuant to § 590.201, unless there exists in the property another interest that is blocked pursuant to § 590.201, the transfer of which has not been effected pursuant to license or other authorization.

(b) Unless otherwise specifically provided in a license or authorization issued pursuant to this part, if property (including any property interest) is transferred or attempted to be transferred to a person whose property and interests in property are blocked pursuant to § 590.201, such property shall be deemed to be property in which such person has an interest and therefore blocked.

§ 590.404 Transactions ordinarily incident to a licensed transaction.

(a) Any transaction ordinarily incident to a licensed transaction and necessary to give effect thereto is also authorized, except:

(1) An ordinarily incident transaction, not explicitly authorized within the terms of the license, by or with a person whose property and interests in property are blocked pursuant to § 590.201; or

(2) An ordinarily incident transaction, not explicitly authorized within the terms of the license, involving a debit to a blocked account or a transfer of blocked property.

(b) For example, a license authorizing a person to complete a securities sale involving Company A, whose property and interests in property are blocked pursuant to § 590.201, also authorizes other persons to engage in activities that are ordinarily incident and necessary to complete the sale, including transactions by the buyer, broker, transfer agents, and banks, provided that such other persons are not themselves persons whose property and interests in property are blocked pursuant to § 590.201.

§ 590.405 Provision and receipt of services.

(a) The prohibitions contained in § 590.201 apply to services performed in the United States or by U.S. persons, wherever located:

(1) On behalf of or for the benefit of any person whose property and interests in property are blocked pursuant to § 590.201; or

(2) With respect to property interests of any person whose property and interests in property are blocked pursuant to § 590.201.

(b) The prohibitions on transactions contained in § 590.201 apply to services received in the United States or by U.S. persons, wherever located, where the service is performed by or at the direction of, any person whose property and interests in property are blocked pursuant to § 590.201.

(c) For example, U.S. persons may not, except as authorized by or pursuant to this part, provide legal, accounting, financial, brokering, freight forwarding, transportation, public relations, or other services to a person whose property and interests in property are blocked pursuant to § 590.201, or negotiate with or enter into contracts signed by a person whose property and interests in property are blocked pursuant to § 590.201.

Note 1 to § 590.405. *See* §§ 590.507 and 590.509 for general licenses authorizing the provision of certain legal and emergency medical services.

§ 590.406 Offshore transactions involving blocked property.

The prohibitions in § 590.201 on transactions or dealings involving blocked property, as defined in § 590.301, apply to transactions by any U.S. person in a location outside the United States.

§ 590.407 Payments from blocked accounts to satisfy obligations prohibited.

Pursuant to § 590.201, no debits may be made to a blocked account to pay obligations to U.S. persons or other persons, except as authorized by or pursuant to this part.

Note 1 to § 590.407. *See also* § 590.502(e), which provides that no license or other authorization contained in or issued pursuant to this part authorizes transfers of or payments from blocked property or debits to blocked accounts unless the license or other authorization explicitly authorizes the transfer of or payment from blocked property or the debit to a blocked account.

§ 590.408 Charitable contributions.

Unless specifically authorized by OFAC pursuant to this part, no charitable contribution of funds, goods, services, or technology, including contributions to relieve human suffering, such as food, clothing, or medicine, may be made by, to, or for the benefit of, or received from, a person whose property and interests in property are blocked pursuant to § 590.201. For the purposes of this part, a contribution is made by, to, or for the benefit of, or received from, a person whose property and interests in property are blocked pursuant to § 590.201 if made by, to, or in the name of, or received from or in the name of, such a person; if made by, to, or in the name of, or received from or in the name of, an entity or individual acting for or on behalf of, or owned or controlled by, such a person; or if made in an attempt to violate, to evade, or to avoid the bar on the provision of contributions by, to, or for the benefit of such a person, or the receipt of contributions from such a person.

§ 590.409 Credit extended and cards issued by financial institutions to a person whose property and interests in property are blocked.

The prohibition in § 590.201 on dealing in property subject to that section prohibits U.S. financial institutions from performing under any existing credit agreements, including charge cards, debit cards, or other credit facilities issued by a financial institution to a person whose property and interests in property are blocked pursuant to § 590.201.

§ 590.410 Setoffs prohibited.

A setoff against blocked property (including a blocked account), whether by a U.S. financial institution or other U.S. person, is a prohibited transfer under § 590.201 if effected after the effective date.

§ 590.411 Entities owned by one or more persons whose property and interests in property are blocked.

Persons whose property and interests in property are blocked pursuant to § 590.201 have an interest in all property and interests in property of an entity in which such persons directly or indirectly own, whether individually or in the aggregate, a 50 percent or greater

interest. The property and interests in property of such an entity, therefore, are blocked, and such an entity is a person whose property and interests in property are blocked pursuant to § 590.201, regardless of whether the name of the entity is incorporated into OFAC's Specially Designated Nationals and Blocked Persons List (SDN List).

Subpart E—Licenses, Authorizations, and Statements of Licensing Policy

§ 590.501 General and specific licensing procedures.

For provisions relating to licensing procedures, see part 501, subpart E, of this chapter. Licensing actions taken pursuant to part 501 of this chapter with respect to the prohibitions contained in this part are considered actions taken pursuant to this part. General licenses and statements of licensing policy relating to this part also may be available through the Transnational Criminal Organizations sanctions page on OFAC's website: *www.treas.gov/ofac.*

§ 590.502 Effect of license or other authorization.

(a) No license or other authorization contained in this part, or otherwise issued by OFAC, authorizes or validates any transaction effected prior to the issuance of such license or other authorization, unless specifically provided in such license or authorization.

(b) No regulation, ruling, instruction, or license authorizes any transaction prohibited under this part unless the regulation, ruling, instruction, or license is issued by OFAC and specifically refers to this part. No regulation, ruling, instruction, or license referring to this part shall be deemed to authorize any transaction prohibited by any other part of this chapter unless the regulation, ruling, instruction, or license specifically refers to such part.

(c) Any regulation, ruling, instruction, or license authorizing any transaction prohibited under this part has the effect of removing a prohibition contained in this part from the transaction, but only to the extent specifically stated by its terms. Unless the regulation, ruling, instruction, or license otherwise specifies, such an authorization does not create any right, duty, obligation, claim, or interest in, or with respect to, any property that would not otherwise exist under ordinary principles of law.

(d) Nothing contained in this part shall be construed to supersede the requirements established under any other provision of law or to relieve a person from any requirement to obtain a license or other authorization from another department or agency of the U.S. Government in compliance with applicable laws and regulations subject to the jurisdiction of that department or agency. For example, exports of goods, services, or technical data that are not prohibited by this part or that do not require a license by OFAC nevertheless may require authorization by the U.S. Department of Commerce, the U.S. Department of State, or other agencies of the U.S. Government.

(e) No license or other authorization contained in or issued pursuant to this part authorizes transfers of or payments from blocked property or debits to blocked accounts unless the license or other authorization explicitly authorizes the transfer of or payment from blocked property or the debit to a blocked account.

(f) Any payment relating to a transaction authorized in or pursuant to this part that is routed through the U.S. financial system should reference the relevant OFAC general or specific license authorizing the payment to avoid the blocking or rejection of the transfer.

§ 590.503 Exclusion from licenses.

OFAC reserves the right to exclude any person, property, transaction, or class thereof from the operation of any license or from the privileges conferred by any license. OFAC also reserves the right to restrict the applicability of any license to particular persons, property, transactions, or classes thereof. Such actions are binding upon actual or constructive notice of the exclusions or restrictions.

§ 590.504 Payments and transfers to blocked accounts in U.S. financial institutions.

Any payment of funds or transfer of credit in which a person whose property and interests in property are blocked pursuant to § 590.201 has any interest that comes within the possession or control of a U.S. financial institution must be blocked in an account on the books of that financial institution. A transfer of funds or credit by a U.S. financial institution between blocked accounts in its branches or offices is authorized, provided that no transfer is made from an account within the United States to an account held outside the United States, and further provided that a transfer from a blocked account may be made only to another blocked account held in the same name.

Note 1 to § 590.504. *See* § 501.603 of this chapter for mandatory reporting requirements regarding financial transfers. *See also* § 590.203 concerning the obligation to hold blocked funds in interest-bearing accounts.

§ 590.505 Entries in certain accounts for normal service charges.

(a) A U.S. financial institution is authorized to debit any blocked account held at that financial institution in payment or reimbursement for normal service charges owed it by the owner of that blocked account.

(b) As used in this section, the term *normal service charges* shall include charges in payment or reimbursement for interest due; cable, telegraph, internet, or telephone charges; postage costs; custody fees; small adjustment charges to correct bookkeeping errors; and, but not by way of limitation, minimum balance charges, notary and protest fees, and charges for reference books, photocopies, credit reports, transcripts of statements, registered mail, insurance, stationery and supplies, and other similar items.

§ 590.506 Investment and reinvestment of certain funds.

Subject to the requirements of § 590.203, U.S. financial institutions are authorized to invest and reinvest assets blocked pursuant to § 590.201, subject to the following conditions:

(a) The assets representing such investments and reinvestments are credited to a blocked account or subaccount that is held in the same name at the same U.S. financial institution, or within the possession or control of a U.S. person, but funds shall not be transferred outside the United States for this purpose;

(b) The proceeds of such investments and reinvestments shall not be credited to a blocked account or subaccount under any name or designation that differs from the name or designation of the specific blocked account or subaccount in which such funds or securities were held; and

(c) No immediate financial or economic benefit accrues (*e.g.,* through pledging or other use) to a person whose property and interests in property are blocked pursuant to § 590.201.

§ 590.507 Provision of certain legal services.

(a) The provision of the following legal services to or on behalf of persons whose property and interests in property are blocked pursuant to § 590.201 is authorized, provided that any receipt of payment of professional fees and reimbursement of incurred expenses must be authorized pursuant to § 590.508, which authorizes certain payments for legal services from funds originating outside the United States; via specific license; or otherwise pursuant to this part:

(1) Provision of legal advice and counseling on the requirements of and

compliance with the laws of the United States or any jurisdiction within the United States, provided that such advice and counseling are not provided to facilitate transactions in violation of this part;

(2) Representation of persons named as defendants in or otherwise made parties to legal, arbitration, or administrative proceedings before any U.S. federal, state, or local court or agency;

(3) Initiation and conduct of legal, arbitration, or administrative proceedings before any U.S. federal, state, or local court or agency;

(4) Representation of persons before any U.S. federal, state, or local court or agency with respect to the imposition, administration, or enforcement of U.S. sanctions against such persons; and

(5) Provision of legal services in any other context in which prevailing U.S. law requires access to legal counsel at public expense.

(b) The provision of any other legal services to or on behalf of persons whose property and interests in property are blocked pursuant to § 590.201, not otherwise authorized in this part, requires the issuance of a specific license.

(c) U.S. persons do not need to obtain specific authorization to provide related services, such as making filings and providing other administrative services, that are ordinarily incident to the provision of services authorized by paragraph (a) of this section. Additionally, U.S. persons who provide services authorized by paragraph (a) of this section do not need to obtain specific authorization to contract for related services that are ordinarily incident to the provision of those legal services, such as those provided by private investigators or expert witnesses, or to pay for such services. *See* § 590.404.

(d) Entry into a settlement agreement or the enforcement of any lien, judgment, arbitral award, decree, or other order through execution, garnishment, or other judicial process purporting to transfer or otherwise alter or affect property or interests in property blocked pursuant to § 590.201 is prohibited unless licensed pursuant to this part.

Note 1 to § 590.507. Pursuant to part 501, subpart E, of this chapter, U.S. persons seeking administrative reconsideration or judicial review of their designation or the blocking of their property and interests in property may apply for a specific license from OFAC to authorize the release of certain blocked funds for the payment of professional fees and reimbursement of incurred expenses for the provision of such legal services where alternative funding sources are not available.

§ 590.508 Payments for legal services from funds originating outside the United States.

(a) *Professional fees and incurred expenses.* (1) Receipt of payment of professional fees and reimbursement of incurred expenses for the provision of legal services authorized pursuant to § 590.507(a) to or on behalf of any person whose property and interests in property are blocked pursuant to § 590.201, is authorized from funds originating outside the United States, provided that the funds do not originate from:

(i) A source within the United States;

(ii) Any source, wherever located, within the possession or control of a U.S. person; or

(iii) Any individual or entity, other than the person on whose behalf the legal services authorized pursuant to § 590.507(a) are to be provided, whose property and interests in property are blocked pursuant to any part of this chapter or any Executive order or statute.

(2) Nothing in paragraph (a) of this section authorizes payments for legal services using funds in which any other person whose property and interests in property are blocked pursuant to § 590.201, any other part of this chapter, or any Executive order or statute has an interest.

(b) *Reports.* (1) U.S. persons who receive payments pursuant to paragraph (a) of this section must submit annual reports no later than 30 days following the end of the calendar year during which the payments were received providing information on the funds received. Such reports shall specify:

(i) The individual or entity from whom the funds originated and the amount of funds received; and

(ii) If applicable:

(A) The names of any individuals or entities providing related services to the U.S. person receiving payment in connection with authorized legal services, such as private investigators or expert witnesses;

(B) A general description of the services provided; and

(C) The amount of funds paid in connection with such services.

(2) The reports, which must reference this section, are to be submitted to OFAC using one of the following methods:

(i) *Email (preferred method): OFACReport@treasury.gov;* or

(ii) *U.S. mail:* OFAC Regulations Reports, Office of Foreign Assets Control, U.S. Department of the Treasury, 1500 Pennsylvania Avenue NW, Freedman's Bank Building, Washington, DC 20220.

§ 590.509 Emergency medical services.

The provision and receipt of nonscheduled emergency medical services that are prohibited by this part are authorized.

§ 590.510 Official business of the United States Government.

All transactions prohibited by this part that are for the conduct of the official business of the United States Government by employees, grantees, or contractors thereof are authorized.

§ 590.511 Official business of certain international organizations and entities.

All transactions prohibited by this part that are for the conduct of the official business of the following entities by employees, grantees, or contractors thereof are authorized:

(a) The United Nations, including its Programmes, Funds, and Other Entities and Bodies, as well as its Specialized Agencies and Related Organizations;

(b) The International Centre for Settlement of Investment Disputes (ICSID) and the Multilateral Investment Guarantee Agency (MIGA);

(c) The African Development Bank Group, the Asian Development Bank, the European Bank for Reconstruction and Development, and the Inter-American Development Bank Group (IDB Group), including any fund entity administered or established by any of the foregoing; and

(d) The International Committee of the Red Cross and the International Federation of Red Cross and Red Crescent Societies.

Subpart F—Reports

§ 590.601 Records and reports.

For provisions relating to required records and reports, see part 501, subpart C, of this chapter. Recordkeeping and reporting requirements imposed by part 501 of this chapter with respect to the prohibitions contained in this part are considered requirements arising pursuant to this part.

Subpart G—Penalties and Findings of Violation

§ 590.701 Penalties.

(a) Section 206 of the International Emergency Economic Powers Act (50 U.S.C. 1705) (IEEPA) is applicable to violations of the provisions of any license, ruling, regulation, order, directive, or instruction issued by or pursuant to the direction or authorization of the Secretary of the

Treasury pursuant to this part or otherwise under IEEPA.

(1) A civil penalty not to exceed the amount set forth in section 206 of IEEPA may be imposed on any person who violates, attempts to violate, conspires to violate, or causes a violation of any license, order, regulation, or prohibition issued under IEEPA.

(2) IEEPA provides for a maximum civil penalty not to exceed the greater of $311,562 or an amount that is twice the amount of the transaction that is the basis of the violation with respect to which the penalty is imposed.

(3) A person who willfully commits, willfully attempts to commit, willfully conspires to commit, or aids or abets in the commission of a violation of any license, order, regulation, or prohibition may, upon conviction, be fined not more than $1,000,000, or if a natural person, be imprisoned for not more than 20 years, or both.

(b)(1) The civil penalties provided in IEEPA are subject to adjustment pursuant to the Federal Civil Penalties Inflation Adjustment Act of 1990 (Pub. L. 101–410, as amended, 28 U.S.C. 2461 note).

(2) The criminal penalties provided in IEEPA are subject to adjustment pursuant to 18 U.S.C. 3571.

(c) Pursuant to 18 U.S.C. 1001, whoever, in any matter within the jurisdiction of the executive, legislative, or judicial branch of the Government of the United States, knowingly and willfully falsifies, conceals, or covers up by any trick, scheme, or device a material fact; or makes any materially false, fictitious, or fraudulent statement or representation; or makes or uses any false writing or document knowing the same to contain any materially false, fictitious, or fraudulent statement or entry shall be fined under title 18, United States Code, imprisoned, or both.

(d) Violations of this part may also be subject to other applicable laws.

§ 590.702 Pre-Penalty Notice; settlement.

(a) *When required.* If OFAC has reason to believe that there has occurred a violation of any provision of this part or a violation of the provisions of any license, ruling, regulation, order, directive, or instruction issued by or pursuant to the direction or authorization of the Secretary of the Treasury pursuant to this part or otherwise under the International Emergency Economic Powers Act (50 U.S.C. 1701 *et seq.*) and determines that a civil monetary penalty is warranted, OFAC will issue a Pre-Penalty Notice informing the alleged violator of the agency's intent to impose a monetary penalty. A Pre-Penalty Notice shall be in writing. The Pre-Penalty Notice may be issued whether or not another agency has taken any action with respect to the matter. For a description of the contents of a Pre-Penalty Notice, see appendix A to part 501 of this chapter.

(b) *Response*—(1) *Right to respond.* An alleged violator has the right to respond to a Pre-Penalty Notice by making a written presentation to OFAC. For a description of the information that should be included in such a response, see appendix A to part 501 of this chapter.

(2) *Deadline for response.* A response to a Pre-Penalty Notice must be made within 30 days as set forth in paragraphs (b)(2)(i) and (ii) of this section. The failure to submit a response within 30 days shall be deemed to be a waiver of the right to respond.

(i) *Computation of time for response.* A response to a Pre-Penalty Notice must be postmarked or date-stamped by the U.S. Postal Service (or foreign postal service, if mailed abroad) or courier service provider (if transmitted to OFAC by courier), or dated if sent by email, on or before the 30th day after the postmark date on the envelope in which the Pre-Penalty Notice was mailed or date the Pre-Penalty Notice was emailed. If the Pre-Penalty Notice was personally delivered by a non-U.S. Postal Service agent authorized by OFAC, a response must be postmarked or date-stamped on or before the 30th day after the date of delivery.

(ii) *Extensions of time for response.* If a due date falls on a federal holiday or weekend, that due date is extended to include the following business day. Any other extensions of time will be granted, at the discretion of OFAC, only upon specific request to OFAC.

(3) *Form and method of response.* A response to a Pre-Penalty Notice need not be in any particular form, but it must be typewritten and signed by the alleged violator or a representative thereof (electronic signature is acceptable), contain information sufficient to indicate that it is in response to the Pre-Penalty Notice, and include the OFAC identification number listed on the Pre-Penalty Notice. The response must be sent to OFAC's Office of Compliance and Enforcement by mail or courier or email and must be postmarked or date-stamped in accordance with paragraph (b)(2) of this section.

(c) *Settlement.* Settlement discussion may be initiated by OFAC, the alleged violator, or the alleged violator's authorized representative. For a description of practices with respect to settlement, see appendix A to part 501 of this chapter.

(d) *Guidelines.* Guidelines for the imposition or settlement of civil penalties by OFAC are contained in appendix A to part 501 of this chapter.

(e) *Representation.* A representative of the alleged violator may act on behalf of the alleged violator, but any oral communication with OFAC prior to a written submission regarding the specific allegations contained in the Pre-Penalty Notice must be preceded by a written letter of representation, unless the Pre-Penalty Notice was served upon the alleged violator in care of the representative.

§ 590.703 Penalty imposition.

If, after considering any written response to the Pre-Penalty Notice and any relevant facts, OFAC determines that there was a violation by the alleged violator named in the Pre-Penalty Notice and that a civil monetary penalty is appropriate, OFAC may issue a Penalty Notice to the violator containing a determination of the violation and the imposition of the monetary penalty. For additional details concerning issuance of a Penalty Notice, see appendix A to part 501 of this chapter. The issuance of the Penalty Notice shall constitute final agency action. The violator has the right to seek judicial review of that final agency action in federal district court.

§ 590.704 Administrative collection; referral to United States Department of Justice.

In the event that the violator does not pay the penalty imposed pursuant to this part or make payment arrangements acceptable to OFAC, the matter may be referred for administrative collection measures by the Department of the Treasury or to the United States Department of Justice for appropriate action to recover the penalty in a civil suit in a federal district court.

§ 590.705 Findings of Violation.

(a) *When issued.* (1) OFAC may issue an initial Finding of Violation that identifies a violation if OFAC:

(i) Determines that there has occurred a violation of any provision of this part, or a violation of the provisions of any license, ruling, regulation, order, directive, or instruction issued by or pursuant to the direction or authorization of the Secretary of the Treasury pursuant to this part or otherwise under the International Emergency Economic Powers Act (50 U.S.C. 1701 *et seq.*);

(ii) Considers it important to document the occurrence of a violation; and

(iii) Based on the Guidelines contained in appendix A to part 501 of this chapter, concludes that an administrative response is warranted but that a civil monetary penalty is not the most appropriate response.

(2) An initial Finding of Violation shall be in writing and may be issued whether or not another agency has taken any action with respect to the matter. For additional details concerning issuance of a Finding of Violation, see appendix A to part 501 of this chapter.

(b) *Response*—(1) *Right to respond.* An alleged violator has the right to contest an initial Finding of Violation by providing a written response to OFAC.

(2) *Deadline for response; Default determination.* A response to an initial Finding of Violation must be made within 30 days as set forth in paragraphs (b)(2)(i) and (ii) of this section. The failure to submit a response within 30 days shall be deemed to be a waiver of the right to respond, and the initial Finding of Violation will become final and will constitute final agency action. The violator has the right to seek judicial review of that final agency action in federal district court.

(i) *Computation of time for response.* A response to an initial Finding of Violation must be postmarked or date-stamped by the U.S. Postal Service (or foreign postal service, if mailed abroad) or courier service provider (if transmitted to OFAC by courier), or dated if sent by email, on or before the 30th day after the postmark date on the envelope in which the initial Finding of Violation was served or date the Finding of Violation was sent by email. If the initial Finding of Violation was personally delivered by a non-U.S. Postal Service agent authorized by OFAC, a response must be postmarked or date-stamped on or before the 30th day after the date of delivery.

(ii) *Extensions of time for response.* If a due date falls on a federal holiday or weekend, that due date is extended to include the following business day. Any other extensions of time will be granted, at the discretion of OFAC, only upon specific request to OFAC.

(3) *Form and method of response.* A response to an initial Finding of Violation need not be in any particular form, but it must be typewritten and signed by the alleged violator or a representative thereof (electronic signature is acceptable), contain information sufficient to indicate that it is in response to the initial Finding of Violation, and include the OFAC identification number listed on the initial Finding of Violation. The response must be sent to OFAC's Office of Compliance and Enforcement by mail or courier or email and must be postmarked or date-stamped in accordance with paragraph (b)(2) of this section.

(4) *Information that should be included in response.* Any response should set forth in detail why the alleged violator either believes that a violation of the regulations did not occur and/or why a Finding of Violation is otherwise unwarranted under the circumstances, with reference to the General Factors Affecting Administrative Action set forth in the Guidelines contained in appendix A to part 501 of this chapter. The response should include all documentary or other evidence available to the alleged violator that supports the arguments set forth in the response. OFAC will consider all relevant materials submitted in the response.

(c) *Determination*—(1) *Determination that a Finding of Violation is warranted.* If, after considering the response, OFAC determines that a final Finding of Violation should be issued, OFAC will issue a final Finding of Violation that will inform the violator of its decision. A final Finding of Violation shall constitute final agency action. The violator has the right to seek judicial review of that final agency action in federal district court.

(2) *Determination that a Finding of Violation is not warranted.* If, after considering the response, OFAC determines a Finding of Violation is not warranted, then OFAC will inform the alleged violator of its decision not to issue a final Finding of Violation.

Note 1 to paragraph (c)(2). A determination by OFAC that a final Finding of Violation is not warranted does not preclude OFAC from pursuing other enforcement actions consistent with the Guidelines contained in appendix A to part 501 of this chapter.

(d) *Representation.* A representative of the alleged violator may act on behalf of the alleged violator, but any oral communication with OFAC prior to a written submission regarding the specific alleged violations contained in the initial Finding of Violation must be preceded by a written letter of representation, unless the initial Finding of Violation was served upon the alleged violator in care of the representative.

Subpart H—Procedures

§ 590.801 Procedures.

For license application procedures and procedures relating to amendments, modifications, or revocations of licenses; administrative decisions; rulemaking; and requests for documents pursuant to the Freedom of Information and Privacy Acts (5 U.S.C. 552 and 552a), see part 501, subpart E, of this chapter.

§ 590.802 Delegation of certain authorities of the Secretary of the Treasury.

Any action that the Secretary of the Treasury is authorized to take pursuant to E.O. 13581 of July 24, 2011, as amended by E.O. 13863 of March 15, 2019, and any further Executive orders relating to the national emergency declared in E.O. 13581, may be taken by the Director of OFAC or by any other person to whom the Secretary of the Treasury has delegated authority so to act.

Subpart I—Paperwork Reduction Act

§ 590.901 Paperwork Reduction Act notice.

For approval by the Office of Management and Budget (OMB) under the Paperwork Reduction Act of 1995 (44 U.S.C. 3507) of information collections relating to recordkeeping and reporting requirements, licensing procedures, and other procedures, see § 501.901 of this chapter. An agency may not conduct or sponsor, and a person is not required to respond to, a collection of information unless it displays a valid control number assigned by OMB.

Andrea M. Gacki,

Director, Office of Foreign Assets Control.

[FR Doc. 2022–01072 Filed 1–20–22; 8:45 am]

BILLING CODE 4810–AL–P

DEPARTMENT OF HOMELAND SECURITY

Coast Guard

33 CFR Parts 1, 6, 62, 151, 160, and 173

46 CFR Parts 4, 5, 7, 11, 13, 15, 31, 67, 71, 91, 107, 126, 144, 147, 172, and 189

[Docket No. USCG–2021–0348]

Navigation and Navigable Waters, and Shipping; Technical, Organizational, and Conforming Amendments

AGENCY: Coast Guard, Department of Homeland Security (DHS).

ACTION: Final rule.

SUMMARY: This final rule makes non-substantive technical, organizational, and conforming amendments to existing Coast Guard regulations. This rule is a continuation of our practice of periodically issuing rules to keep our regulations up-to-date and accurate.

This rule will have no substantive effect on the regulated public.

DATES: This final rule is effective January 21, 2022.

ADDRESSES: To view documents mentioned in this preamble as being available in the docket, go to *https://www.regulations.gov,* type USCG–2021–0348 in the search box and click ''Search.'' Next, in the Document Type column, select ''Supporting & Related Material.''

FOR FURTHER INFORMATION CONTACT: For information about this document call or email Victoria Phoenix, Coast Guard; telephone 202–372–3744, email *victoria.phoenix@uscg.mil.*

SUPPLEMENTARY INFORMATION:

Table of Contents for Preamble

I. Abbreviations
II. Regulatory History
III Basis and Purpose
IV. Discussion of the Rule
V. Regulatory Analyses
A. Regulatory Planning and Review
B. Small Entities
C. Assistance for Small Entities
D. Collection of Information
E. Federalism
F. Unfunded Mandates
G. Taking of Private Property
H. Civil Justice Reform
I. Protection of Children
J. Indian Tribal Governments
K. Energy Effects
L. Technical Standards
M. Environment

I. Abbreviations

AIS Automatic Identification System
AtoN Aids to Navigation
Authorization Act Frank LoBiondo Coast Guard Authorization Act of 2018
CFR Code of Federal Regulations
COMDTINST Commandant Instruction
DHS Department of Homeland Security
FR Federal Register
GRT Gross Register Tonnage
GT Gross Tonnage
ICGB International Cargo Gear Bureau
IMO International Maritime Organization
NCB National Cargo Bureau
NOV Notice of Violation
NVDC National Vessel Documentation Center
OMB Office of Management and Budget
RO Code Code for Recognized Organizations
§ Section
S&R NCOE Suspension and Revocation National Center of Expertise
SNPRM Supplemental notice of public rulemaking
STCW final rule Implementation of the Amendments to the International Convention on Standards of Training, Certification, and Watchkeeping for Seafarers, 1978, and Changes to National Endorsements final rule (78 FR 77796, December 24, 2013)
U.S.C. United States Code

II. Regulatory History

We did not publish a notice of proposed rulemaking for this rule. Under Title 5 of the United States Code (U.S.C.), Section 553(b)(A), the Coast Guard finds that this final rule is exempt from notice and public comment rulemaking requirements because these changes involve rules of agency organization, procedure, or practice. In addition, the Coast Guard finds that notice and comment procedures are unnecessary for this final rule under 5 U.S.C. 553(b)(B), as this rule consists of only technical and editorial corrections and these changes will have no substantive effect on the public. Under 5 U.S.C. 553(d)(3), the Coast Guard finds that, for the same reasons, good cause exists for making this final rule effective upon publication in the **Federal Register**.

III. Basis and Purpose

This final rule, which becomes effective on January 21, 2022, makes technical and editorial corrections throughout titles 33 and 46 of the Code of Federal Regulations (CFR). These changes are necessary to update authority citations, correct errors, update contact information, and make other non-substantive amendments that improve the clarity of the CFR. This rule does not create or change any substantive requirements.

This final rule is issued under the authority of 5 U.S.C. 552(a), 14 U.S.C. 102 and 503; the Department of Homeland Security's (DHS) DHS Delegation No. 00170.1, Revision No. 01.2; and authorities listed at the end of this rule for each CFR part this rule amends.

IV. Discussion of the Rule

The Coast Guard periodically issues technical, organizational, and conforming amendments to existing regulations in titles 33 and 46 of the CFR. These technical amendments provide the public with accurate and current regulatory information, but do not change the effect of any Coast Guard regulations on the public.

A. Authority Citation Updates

This rule updates the authority citations in 33 CFR parts 6, 62, 151, 160, and 173, and 46 CFR parts 4, 5, 7, 11, 13, 15, 31, 67, 71, 91, 107, 126, 144, 147, 172, and 189. On December 4, 2018, Congress enacted the Frank LoBiondo Coast Guard Authorization Act of 2018 (Authorization Act), Public Law 115–282, 132 Stat. 4192. The Authorization Act redesignated multiple provisions within Titles 14, 33, 46, and 50 of the U.S. Code (U.S.C.), without substantive change, in an effort to reorganize these titles. The Coast Guard often uses the affected statutory provisions as authority for issuing regulations related to maritime safety and security. This rule updates statutory authority citations that were inadvertently omitted from updating when the Coast Guard redesignated statutory authorities throughout titles 33 and 46 of the CFR in response to the Authorization Act (85 FR 58268, Sept. 18, 2020).

This rule also corrects errors in the authority citations for 33 CFR part 160 and 46 CFR part 67. The updates will correct the omission in 33 CFR part 160 of the word ''Chapter'' when referring to authority deriving from Title 46 U.S.C Chapter 701 (46 U.S.C. 70101–70132). Also, we are moving the reference to ''46 U.S.C. 70011'' in the first sentence of the part 160 citation to the second sentence, where it was meant to replace ''33 U.S.C. 1225,'' which previously appeared in the second sentence. The second sentence listed additional authorities for subpart C of part 160. For 46 CFR part 67, we are correcting a reference to ''4 U.S.C. 664'' that was intended to reference 14 U.S.C. 664.

Finally, this rule updates the authority citations in 33 CFR subpart 1.07, 33 CFR parts 62, 151, 160, and 173, and 46 CFR parts 4, 5, 7, 11, 13, 15, 31, 67, 71, 91, 107, 126, 144, 147, 172, and 189 to reflect the adoption of Revision No. 01.2 for DHS Delegation 00170.1 and to use the preferred terminology for this delegation.

B. Technical Amendments to Title 33 of the CFR

In § 1.07–5(c), this rule amends the definition of ''issuing officer'' by adding qualified civilians to the list of Coast Guard personnel who may issue a notice of violation (NOV). Previously, the definition only provided that Coast Guard commissioned, warrant, or petty officers could issue NOVs. These officers do investigate potential violations; however, an increasing number of investigating officers are civilian employees of the Coast Guard. These civilians have the same training and apply the same policies as uniformed issuing officers. Adding qualified civilians to the definition of ''issuing officer'' will not change the frequency or type of NOV issued. Revising the CFR to add qualified civilians is a matter of agency

management and personnel as described in 5 U.S.C. 553(a)(2). It is therefore exempt from 5 U.S.C. 553 procedures, and requires no prior notice or opportunity for public comment and no delay of effective date.

In § 6.04–1, this rule adds new paragraph (d) to direct readers to the appeal mechanism for decisions and actions by a Captain of the Port in 33 CFR 160.7. This provision does not modify the appeal mechanism in any way, but is intended as a convenience for readers who may not expect the appeals process for 33 CFR part 6 actions to be located in 33 CFR 160.7.

In § 62.52(b), this rule updates the reference to ''real'' Automatic Identification System (AIS) Aids to Navigation (AtoN) ''physically fitted to the AtoN'' to a ''physical'' AIS ''fitted to the AtoN,'' in keeping with an internationally agreed upon lexicon change.

In § 151.66(c)(3)(iv), this rule removes the entire paragraph governing keeping records and reporting of the discharge of bulk dry cargo residue on the Great Lakes using Coast Guard Form CG–33. The requirement to use Form CG–33 and submit quarterly reports to the Coast Guard expired on February 28, 2015, but unclear wording caused confusion and unnecessary reporting burdens on Great Lakes vessel owners and operators. There is no longer a requirement to use this specific form or submit it to the Coast Guard, but the recordkeeping requirement remains in force. The Coast Guard's Office of Operating and Environmental Standards has published a Maritime Commons blog post and worked with the Coast Guard's Ninth District to remind U.S. and Canadian vessel owners to communicate this to their employees. This rule also redesignates existing § 151.66(c)(3)(v) as § 151.66(c)(3)(iv), and amends it to remove the reference to Form CG–33. The required record may be in any written format.

In § 173.57, this rule removes paragraph (b) governing the required content of a casualty report filed prior to January 1, 2017, as that date has passed and the paragraph is no longer relevant. Additionally, we have removed the January 1, 2017, date from the existing paragraph (c) and redesignated that paragraph as paragraph (b).

C. Technical Amendments to Title 46 of the CFR

In § 4.40–5(d)(3), this rule revises the definition of ''major marine casualty'' to apply to property damage initially estimated at $2,000,000 or more, rather than $500,000 as provided in the current regulations. This new language reflects Section 211 of the Save Our Seas Act of 2018 (Pub. L. 115–265, 132 Stat. 3742), which amended section 6101(i)(3) of Title 46, U.S.C., to increase the dollar amount for property damage to qualify a casualty involving a vessel as a ''major marine casualty'' from $500,000 to $2,000,000.

In § 5.713(b), this rule amends the mailing address for appeals to the National Transportation Safety Board to allow appeal briefs and communications to be sent directly to the Suspension and Revocation National Center of Expertise (S&R NCOE) office located in Martinsburg, West Virginia. The address change will not impact the designation of the Chief Counsel of the Coast Guard as the Commandant's representative in these matters. In accordance with Coast Guard policy, the Chief Counsel has attorneys detailed to the S&R NCOE office in Martinsburg, West Virginia office as primary contacts for suspension and revocation appellate matters. Changing the address to the Martinsburg, West Virginia office will ensure all written and electronic correspondence is received in a timely manner.

In § 7.30, this rule reflects the disestablishment of Ambrose Light and the conversion of Highlands Light to a Private Aid. Additionally, this rule provides specific coordinates and (where applicable) Light List Numbers for East Rockaway Inlet Breakwater Light, the former Ambrose Light, and Highlands Light.

In § 11.410(c), this rule corrects an error introduced in the 2013 Implementation of the Amendments to the International Convention on Standards of Training, Certification, and Watchkeeping for Seafarers, 1978, and Changes to National Endorsements final rule (78 FR 77796, December 24, 2013) (STCW final rule) to limiting an officer's endorsement obtained with an orally assisted examination to vessels of 200 gross register tonnage (GRT), rather than 500 GRT as currently indicated in paragraph (c). The Coast Guard's intent can be clearly seen in current § 11.201(j)(i), which provides that ''any applicant for a deck or engineer officer endorsement limited to vessels less than 200 GRT, or an officer endorsement limited to uninspected fishing industry vessels, may request an orally assisted examination instead of any written or other textual examination.'' Conforming § 11.401(c) with § 11.201(j)(i) will eliminate any confusion with the endorsements.

In § 11.711(c), this rule replaces references to required pilot experience on vessels of 1,600 GRT or 3,000 ''gross tonnage'' (GT) with reference to 1,600 ''gross register tonnage'' (GRT) only. In the STCW final rule, the Coast Guard adopted the convention that it would use GRT when discussing national endorsements and GT when discussing Standards of Training, Certification, and Watchkeeping for Seafarers endorsements. In the Correcting Amendments to the STCW final rule, the Coast Guard decided to revert to the prior text of the 2013 rule, but omitted the convention of solely using GRT for national endorsements and reverted to the prior text without editing the tonnage to 1,600 GRT. As a result, the requirement for GRT remained, causing confusion in the industry. This change conforms paragraph (c), which refers to not having sufficient experience, with paragraphs (a), (b), and (d), which all use 1,600 GRT as the standard to determine whether the applicant has sufficient experience.

In §§ 13.201(c)(3), 13.301(c)(3), 13.401(d), and 13.501(c)(3), this rule changes references to Table 1 to § 13.121(g) to the correct reference of Table 3 to § 13.121(e). In the 2013 STCW final rule, § 13.121 was revised, and what had been Table 13.121(g) (''Course topics'' for firefighting) was renamed Table 3 to § 13.121(e). While in that same final rule, §§ 13.201(c)(3), 13.301(c)(3), 13.401(d), and 13.501(c)(3), all referenced ''Table 1 to § 13.121(g),'' when identifying an approved firefighting course, § 13.121(e)(1) and (3) make clear that ''course curricula for firefighting courses must consist of the topics identified in Table 3 to § 13.121(e),'' and that Table 1 to § 13.121(e) consists of course curricula topics for Tankship Familiarization.

In § 15.105(f), this rule corrects the cross-references defining the terms ''fishing vessel'' and ''fish-tender vessel'' from 46 U.S.C. 2101(11)(a) and (11)(c) to 46 U.S.C. 2101(12) and (14), respectively.

In § 15.812(e)(2), this rule corrects an error in the tables for the 2013 STCW final rule indicating that a Master, Mate, or Mate (Pilot) could serve as a pilot of a tank barge of greater than 10,000 GRT/GT, authorized to proceed beyond the Boundary Line or operate on the Great Lakes and on a route where a First Class Pilot's license or MMC officer endorsement is required. This is only true for tank barges of less than 10,000 GRT/GT; only individuals with an endorsement as First Class Pilot may pilot tank barges greater than 10,000 GRT/GT under such circumstances. The entry in Table 1 to § 15.812(e)(2) to the contrary is the result of a printing error; the Coast Guard's intent in this matter can be seen in current § 15.812(b)(3),

which contains the correct requirements. Furthermore, this provision did not appear in the supplemental notice of proposed rulemaking [1] (SNPRM) that preceded the STCW final rule, nor was it discussed as a difference between the SNPRM and the final rule in the STCW final rule's table of changes.[2]

In § 31.10–16(e)(1), this rule updates the address for the National Cargo Bureau (NCB), as the organization relocated its New York offices.

In § 31.10–16(e)(2), this rule updates the address for the International Cargo Gear Bureau (ICGB), as the organization relocated its New York offices.

In § 71.30–10(a), this rule updates language referring to a Coast Guard inspector as ''he.'' Other regulations referencing Coast Guard inspectors have already been updated or were written with ''he or she.''

In § 71.65–1(c), this rule updates the address for the ICGB, as the organization relocated its New York offices.

In §§ 91.25–50(a) and 91.27–15(a), this rule updates language referring to a Coast Guard inspector as ''he.'' Other regulations referencing Coast Guard inspectors have already been updated or were written with ''he or she.''

In § 107.317(d), this rule updates the address for the ICGB, as the organization relocated its New York offices.

In § 126.100, this rule updates language referring to a Coast Guard inspector as ''he.'' Other regulations referencing Coast Guard inspectors have already been updated or were written with ''he or she.''

In § 144.105, this rule removes an erroneous reference to the applicability of a nonexistent § 144.910 to the construction of new towing vessels, resulting from an editorial error in the 2016 Inspection of Towing Vessels final rule (81 FR 40101, June 20, 2016). In an earlier in-house draft of that rule, there were two sections addressing operating station visibility (§ 144.905 for existing vessels, and § 144.910 for new vessels). Since both sections had paragraphs that were nearly identical, the rule drafters merged the requirements into § 144.905 for the final rule, but overlooked the mention of § 144.910 in this section. There is no need to add a new reference to this section, since the requirements for new vessels are specifically identified in § 144.905(d) and (e).

In §§ 147.5 and 147.40, this rule changes references in the section titles from ''Commandant (CG–OES)'' to ''Commandant (CG–ENG)'' to match the contact information given in these sections.

In § 172.040(b), this rule updates the address for the NCB, as the organization relocated its New York offices.

In § 189.25–50(a), this rule updates language referring to a Coast Guard inspector as ''he.'' Other regulations referencing Coast Guard inspectors have already been updated or were written with ''he or she.''

V. Regulatory Analyses

We developed this rule after considering numerous statutes and Executive orders related to rulemaking. Below we summarize our analyses based on these statutes or Executive orders.

A. Regulatory Planning and Review

Executive Orders 12866 (Regulatory Planning and Review) and 13563 (Improving Regulation and Regulatory Review) direct agencies to assess the costs and benefits of available regulatory alternatives and, if regulation is necessary, to select regulatory approaches that maximize net benefits (including potential economic, environmental, public health and safety effects, distributive impacts, and equity). Executive Order 13563 emphasizes the importance of quantifying both costs and benefits, of reducing costs, of harmonizing rules, and of promoting flexibility. Two additional Executive orders were recently published to promote the goals of Executive Order 13563: Executive Order 13609 (Promoting International Regulatory Cooperation) and Executive Order 13610 (Identifying and Reducing Regulatory Burdens). Executive Order 13609 targets international regulatory cooperation to reduce, eliminate, or prevent unnecessary differences in regulatory requirements. Executive Order 13610 aims to modernize the regulatory systems and to reduce unjustified regulatory burdens and costs on the public.

The Office of Management and Budget (OMB) has not designated this rule a significant regulatory action under section 3(f) of Executive Order 12866. Accordingly, OMB has not reviewed it. A regulatory analysis follows.

This rule involves non-substantive technical amendments and internal agency practices and procedures; it will not impose any additional costs. The technical amendments in this rule fit into categories that involve (1) correcting inadvertent typographical errors in the CFR; (2) modifying existing language in the CFR by addition or subtraction to improve the readability or clarity of regulations; (3) removing irrelevant information, such as expired regulatory provisions or cancelled reference material, and replacing outdated regulatory information with current information where applicable; and (4) revising office contact information and mailing addresses. The Coast Guard does not expect that there will be any additional costs conferred on the public or the Federal Government because none of the technical and editorial changes included in this rule will change existing regulatory requirements. A summary of these amendments by category and by CFR title and section are presented below in table 1.

TABLE 1—SUMMARY OF REGULATORY CHANGES BY CFR TITLE AND SECTION

Title	Section	Description of changes	Economic impact
46	§§ 4.40–5(d)(3), 11.410(c), 13.201(c)(3), 13.301(c)(3), 13.401(d), 13.501(c)(3), 15.105(f), 15.812(e)(2), part 67,* and 144.105.	Improves the accuracy of regulatory information by correcting erroneous information.	Corrects various typographical errors.
33	§§ 1.07–5(c), 6.04–1, 62.52(b), and part 160 *.	Adds clarifying language and removes redundant, confusing, or incorrect language.	Improves readability and clarity of regulations.
46	§§ 7.30, 11.711(c), 71.30–10(a), 91.25–50(a), 91.27–15(a), 126.100, and 189.25–50(a).		

[1] 76 FR 45907 (August 1, 2011).

[2] The Coast Guard did make an amendment to § 15.812 in the STCW final rule that was not contemplated in the SNPRM, but only to clarify, in response to public comment, that an annual physical examination is required for a pilot only if serving on a vessel greater than 1,600 GRT.

TABLE 1—SUMMARY OF REGULATORY CHANGES BY CFR TITLE AND SECTION—Continued

Title	Section	Description of changes	Economic impact
33	§§ 151.66(c)(3)(iv) and 173.57(b) and (c) introductory text.	Removes or replaces expired or cancelled references or provisions.	Improves readability by removing or replacing irrelevant information.
46	§§ 5.713(b), 31.10–16(e)(1) and (2), 71.65–1(c), 107.317(d), 147.5 section heading, 147.40, and 172.040(b).	Updates office contact information or mailing addresses.	Improves the accuracy of regulatory information through administrative changes.

* 46 CFR part 67 and 33 CFR part 160 contain editorial errors in the authority citation. This rule resolves these errors.

The unquantified benefits of the non-substantive technical amendments are increased accuracy of regulatory information by correcting erroneous information, improved readability and clarity of regulations by removing redundant or confusing language and by removing expired or cancelled provisions that are no longer relevant. In addition, the correction of technical items such as office mailing addresses and location coordinates will improve the accuracy of regulatory information and the ability to reference and contact the correct entities.

B. Small Entities

Under the Regulatory Flexibility Act, 5 U.S.C. 601–612, we have considered whether this rule would have a significant economic impact on a substantial number of small entities. The term ''small entities'' comprises small businesses, not-for-profit organizations that are independently owned and operated and are not dominant in their fields, and governmental jurisdictions with populations of less than 50,000.

This rule is not preceded by a notice of proposed rulemaking. The Regulatory Flexibility Act does not apply when notice and comment rulemaking is not required. Therefore, this rule is exempt from the requirements of the Regulatory Flexibility Act. This rule consists of technical, organizational, and conforming amendments and does not have any substantive effect on the regulated industry or small businesses.

C. Assistance for Small Entities

Under section 213(a) of the Small Business Regulatory Enforcement Fairness Act of 1996, Public Law 104–121, we offer to assist small entities in understanding this rule so that they can better evaluate its effects on them and participate in the rulemaking. The Coast Guard will not retaliate against small entities that question or complain about this rule or any policy or action of the Coast Guard.

D. Collection of Information

This rule calls for no new collection of information under the Paperwork Reduction Act of 1995, 44 U.S.C. 3501–3520.

E. Federalism

A rule has implications for federalism under Executive Order 13132 (Federalism) if it has a substantial direct effect on States, on the relationship between the National Government and the States, or on the distribution of power and responsibilities among the various levels of government. We have analyzed this rule under Executive Order 13132 and have determined that it is consistent with the fundamental federalism principles and preemption requirements described in Executive Order 13132.

F. Unfunded Mandates

The Unfunded Mandates Reform Act of 1995, 2 U.S.C. 1531–1538, requires Federal agencies to assess the effects of their discretionary regulatory actions. In particular, the Act addresses actions that may result in the expenditure by a State, local, or tribal government, in the aggregate, or by the private sector of $100,000,000 (adjusted for inflation) or more in any one year. Although this rule will not result in such expenditure, we do discuss the effects of this rule elsewhere in this preamble.

G. Taking of Private Property

This rule will not cause a taking of private property or otherwise have taking implications under Executive Order 12630 (Governmental Actions and Interference with Constitutionally Protected Property Rights).

H. Civil Justice Reform

This rule meets applicable standards in sections 3(a) and 3(b)(2) of Executive Order 12988 (Civil Justice Reform) to minimize litigation, eliminate ambiguity, and reduce burden.

I. Protection of Children

We have analyzed this rule under Executive Order 13045 (Protection of Children from Environmental Health Risks and Safety Risks). This rule is not an economically significant rule and will not create an environmental risk to health or risk to safety that might disproportionately affect children.

J. Indian Tribal Governments

This rule does not have tribal implications under Executive Order 13175 (Consultation and Coordination with Indian Tribal Governments), because it will not have a substantial direct effect on one or more Indian tribes, on the relationship between the Federal Government and Indian tribes, or on the distribution of power and responsibilities between the Federal Government and Indian tribes.

K. Energy Effects

We have analyzed this rule under Executive Order 13211 (Actions Concerning Regulations That Significantly Affect Energy Supply, Distribution, or Use). We have determined that it is not a ''significant energy action'' under that order because it is not a ''significant regulatory act ion'' under Executive Order 12866 and is not likely to have a significant adverse effect on the supply, distribution, or use of energy.

L. Technical Standards

The National Technology Transfer and Advancement Act, codified as a note to 15 U.S.C. 272, directs agencies to use voluntary consensus standards in their regulatory activities unless the agency provides Congress, through OMB, with an explanation of why using these standards would be inconsistent with applicable law or otherwise impractical. Voluntary consensus standards are technical standards (for example, specifications of materials, performance, design, or operation; test methods; sampling procedures; and related management systems practices) that are developed or adopted by voluntary consensus standards bodies.

This rule does not use technical standards. Therefore, we did not consider the use of voluntary consensus standards.

M. Environment

We have analyzed this rule under Department of Homeland Security Management Directive 023–01, Rev. 1, associated implementing instructions, and Environmental Planning COMDTINST 5090.1 (series), which

guide the Coast Guard in complying with the National Environmental Policy Act of 1969 (42 U.S.C. 4321–4370f), and have made a determination that this action is one of a category of actions that do not individually or cumulatively have a significant effect on the human environment. A Record of Environmental Consideration supporting this determination is available in the docket. For instructions on locating the docket, see the **ADDRESSES** section of this preamble.

This rule is categorically excluded under paragraphs A3 and L54 of Appendix A, Table 1 of DHS Instruction Manual 023–01–001–01, Rev. 1. Paragraph A3 pertains to the promulgation of rules, issuance of rulings or interpretations, and the development and publication of policies, orders, directives, notices, procedures, manuals, advisory circulars, and other guidance documents of the following nature: (a) Those of a strictly administrative or procedural nature; (b) those that implement, without substantive change, statutory or regulatory requirements; (c) those that implement, without substantive change, procedures, manuals, and other guidance documents; and (d) those that interpret or amend an existing regulation without changing its environmental effect. Paragraph L54 pertains to regulations which are editorial or procedural. This final rule involves non-substantive technical, organizational, and conforming amendments to existing Coast Guard regulations.

List of Subjects

33 CFR Part 1

Administrative practice and procedure, Authority delegations (Government agencies), Freedom of information, Penalties.

33 CFR Part 6

Harbors, Security measures, Vessels.

33 CFR Part 62

Navigation (water).

33 CFR Part 151

Administrative practice and procedure, Oil pollution, Penalties, Reporting and recordkeeping requirements, Water pollution control.

33 CFR Part 160

Administrative practice and procedure, Harbors, Hazardous materials transportation, Marine safety, Navigation (water), Personally identifiable information, Reporting and recordkeeping requirements, Seamen, Vessels, Waterways.

33 CFR Part 173

Marine safety, Reporting and recordkeeping requirements.

46 CFR Part 4

Administrative practice and procedure, Drug testing, Investigations, Marine safety, National Transportation Safety Board, Nuclear vessels, Radiation protection, Reporting and recordkeeping requirements, Safety, Transportation.

46 CFR Part 5

Administrative practice and procedure, Alcohol abuse, Drug abuse, Investigations, Seamen.

46 CFR Part 7

Law enforcement, Vessels.

46 CFR Part 11

Penalties, Reporting and recordkeeping requirements, Schools, Seamen.

46 CFR Part 13

Cargo vessels, Reporting and recordkeeping requirements, Seamen.

46 CFR Part 15

Reporting and recordkeeping requirements, Seamen, Vessels.

46 CFR Part 31

Cargo vessels, Marine safety, Reporting and recordkeeping requirements.

46 CFR Part 67

Reporting and recordkeeping requirements, Vessels.

46 CFR Part 71

Marine safety, Passenger vessels, Reporting and recordkeeping requirements.

46 CFR Part 91

Cargo vessels, Marine safety, Reporting and recordkeeping requirements.

46 CFR Part 107

Marine safety, Oil and gas exploration, Reporting and recordkeeping requirements, Vessels.

46 CFR Part 126

Cargo Vessels, Marine safety, Reporting and recordkeeping requirements.

46 CFR Part 144

Cargo vessels, Incorporation by reference, Marine safety, Oil and gas exploration, Passenger vessels, Reporting and recordkeeping requirements, Towing vessels.

46 CFR Part 147

Hazardous materials transportation, Labeling, Marine safety, Packaging and containers, Reporting and recordkeeping requirements.

46 CFR Part 172

Cargo vessels, Hazardous materials transportation, Marine safety.

46 CFR Part 189

Marine safety, Oceanographic research vessels, Reporting and recordkeeping requirements.

For the reasons discussed in the preamble, the Coast Guard amends 33 CFR parts 1, 6, 62, 151, 160, and 173 and 46 CFR parts 4, 5, 7, 11, 13, 15, 31, 67, 71, 91, 107, 126, 144, 147, 172, and 189 as follows:

Title 33—Navigation and Navigable Waters

PART 1—GENERAL PROVISIONS

Subpart 1.07—Enforcement; Civil and Criminal Penalty Proceedings

■ 1. Revise the authority citation for part 1, subpart 1.07, to read as follows:

Authority: 14 U.S.C. 503; 14 U.S.C 501; 33 U.S.C. 1321(b)(6)(B); 46 U.S.C. 2103; DHS Delegation 00170.1, Revision No. 01.2.

§ 1.07–5 [Amended]

■ 2. In § 1.07–5(c), remove the text ''petty officer.'' and add, in its place, the text ''petty officer, or qualified civilian.''.

PART 6—PROTECTION AND SECURITY OF VESSELS, HARBORS, AND WATERFRONT FACILITIES

■ 3. The authority citation for part 6 continues to read as follows:

Authority: 40 Stat. 220, as amended; 50 U.S.C. 70051.

■ 4. In § 6.04–1, add paragraph (d) to read as follows:

§ 6.04–1 Enforcement.

* * * * *

(d) Actions taken and decisions made under this part can be appealed through the procedures outlined in 33 CFR 160.7.

PART 62—UNITED STATES AIDS TO NAVIGATION SYSTEM

■ 5. Revise the authority citation for part 62 to read as follows:

Authority: 14 U.S.C. 544; 43 U.S.C. 1333; 46 U.S.C. 70031, 70041; DHS Delegation 00170.1, Revision No. 01.2.

§ 62.52 [Amended]

■ 6. In § 62.52(b), remove the text ''real (physically'' and add, in its place, the text ''physical (''.

PART 151—VESSELS CARRYING OIL, NOXIOUS LIQUID SUBSTANCES, GARBAGE MUNICIPAL OR COMMERCIAL WASTE, AND BALLAST WATER

■ 7. Revise the authority citation for part 151 to read as follows:

Authority: 33 U.S.C. 1902, 1903, 1908; 46 U.S.C. 6101; 46 U.S.C. 70034; Pub. L. 104–227, 110 Stat. 3034; sec. 623, Pub. L. 108–293, 118 Stat. 1063; E.O. 12777, 56 FR 54757, 3 CFR, 1991 Comp., p. 351; DHS Delegation 00170.1, Revision No. 01.2, paragraph (II)(77).

§ 151.66 [Amended]

■ 8. Amend § 151.66 as follows:
■ a. Remove paragraph (c)(3)(iv);
■ b. Redesignate paragraph (c)(3)(v) as paragraph (c)(3)(iv); and
■ c. In newly redesignated paragraph (c)(3)(iv):
■ i. Remove the first sentence; and
■ ii. Remove ''However, records must still'' and add, in its place, the words ''Records must''.

PART 160—PORTS AND WATERWAYS SAFETY—GENERAL

■ 9. Revise the authority citation for part 160 to read as follows:

Authority: 46 U.S.C. 70001–70003, 70034, and Chapter 701; DHS Delegation 00170.1, Revision No. 01.2. Subpart C is also issued under the authority of 46 U.S.C. 3715 and 46 U.S.C. 70011.

PART 173—VESSEL NUMBERING AND CASUALTY AND ACCIDENT REPORTING

■ 10. Revise the authority citation for part 173 to read as follows:

Authority: 31 U.S.C. 9701; 46 U.S.C. 2110, 6101, 12301, 12302; OMB Circular A–25; DHS Delegation 00170.1, Revision No. 01.2.

§ 173.57 [Amended]

■ 11. Amend § 173.57 as follows:
■ a. Remove paragraph (b);
■ b. Redesignate paragraph (c) as paragraph (b); and
■ c. In the introductory text of newly redesignated paragraph (b), remove the text ''As of January 1, 2017, each'' and add, in its place, the word ''Each''.

Title 46—Shipping

PART 4—MARINE CASUALTIES AND INVESTIGATIONS

■ 12. Revise the authority citation for part 4 to read as follows:

Authority: 43 U.S.C. 1333; 46 U.S.C. 2103, 2303A, 2306, 6101, 6301, 6305, 70034; 50 U.S.C. 198; DHS Delegation 00170.1, Revision No. 01.2. Subpart 4.40 issued under 49 U.S.C. 1903(a)(1)(E).

§ 4.40–5 [Amended]

■ 13. In § 4.40–5(d)(3), remove the text ''$500,000'' and add, in its place, the text ''$2,000,000''.

PART 5—MARINE INVESTIGATION REGULATIONS—PERSONNEL ACTION

■ 14. Revise the authority citation for part 5 to read as follows:

Authority: 46 U.S.C. 2103, 7101, 7301, 7701; DHS Delegation 00170.1, Revision No. 01.2.

§ 5.713 [Amended]

■ 15. Amend § 5.713(b) by removing the text ''Commandant (CG–094), Attn: Judge Advocate General (JAG) and Chief Counsel, U.S. Coast Guard Stop 7213, 2703 Martin Luther King Jr. Avenue SE, Washington, DC 20593–7213'' and adding, in its place, the text ''Suspension and Revocation National Center of Expertise (S&R NCOE): by mail to U.S. Coast Guard National Maritime Center, S&R National Center of Expertise, 100 Forbes Drive, Martinsburg, WV 25404–7213 or electronically to *SR-NCOE@uscg.mil*''.

PART 7—BOUNDARY LINES

■ 16. Revise the authority citation for part 7 to read as follows:

Authority: 14 U.S.C. 503; 33 U.S.C. 151; DHS Delegation 00170.1, Revision No. 01.2.

■ 17. Revise § 7.30 to read as follows:

§ 7.30 New York Harbor, NY.

A line drawn from East Rockaway Inlet Breakwater Light (LLNR 31500) at 40°34′56.600″ N, 073°45′17.200″ W to 40°27′00″ N, 073°48′00″ W (former Ambrose Light position); thence to Highlands Light (LLNR 35025) (Private aid) (north tower) at 40°23′47.640″ N, 073°59′09.000″ W.

PART 11—REQUIREMENTS FOR OFFICER ENDORSEMENTS

■ 18. Revise the authority citation for part 11 to read as follows:

Authority: 14 U.S.C. 503; 31 U.S.C. 9701; 46 U.S.C. 2101, 2103, and 2110; 46 U.S.C. chapter 71; 46 U.S.C. 7502, 7505, 7701, 8906, and 70105; E.O. 10173, 15 FR 7005, 3 CFR, 1949–1953 Comp., p.356; DHS Delegation 00170.1, Revision No. 01.2. Section 11.107 is also issued under the authority of 44 U.S.C. 3507.

§ 11.410 [Amended]

■ 19. In § 11.410(c), remove the text ''500'' and add, in its place, the text ''200''.

§ 11.711 [Amended]

■ 20. In § 11.711(c), remove the text ''1,600 GRT/3,000 GT'' wherever it appears and add, in its place, the text ''1,600 GRT'' and remove ''of this subpart''.

PART 13—CERTIFICATION OF TANKERMEN

■ 21. Revise the authority citation for part 13 to read as follows:

Authority: 46 U.S.C. 3703, 7317, 8105, 8703, 9102; DHS Delegation 00170.1, Revision No. 01.2.

§ 13.201 [Amended]

■ 22. In § 13.201(c)(3), remove the text ''Table 1 to § 13.121(g) of this part'' and add, in its place, the text ''Table 3 to § 13.121(e)''.

§ 13.301 [Amended]

■ 23. In § 13.301(c)(3), remove the text ''Table 1 to § 13.121(g) of this part'' and add, in its place, the text ''Table 3 to § 13.121(e)''.

§ 13.401 [Amended]

■ 24. In § 13.401(d), remove the text ''Table 1 to § 13.121(g) of this part'' and add, in its place, the text ''Table 3 to § 13.121(e)''.

§ 13.501 [Amended]

■ 25. In § 13.501(c)(3), remove the text ''Table 1 to § 13.121(g) of this part'' and add, in its place, the text ''Table 3 to § 13.121(e)''.

PART 15—MANNING REQUIREMENTS

■ 26. Revise the authority citation for part 15 to read as follows:

Authority: 46 U.S.C. 2101, 2103, 3306, 3703, 8101, 8102, 8103, 8104, 8105, 8301, 8304, 8502, 8503, 8701, 8702, 8901, 8902, 8903, 8904, 8905(b), 8906 and 9102; sec. 617, Pub. L. 111–281, 124 Stat. 2905; and DHS Delegation 00170.1, Revision No. 01.2.

§ 15.105 [Amended]

■ 27. Amend § 15.105 as follows:
■ a. In paragraph (f)(1), remove the text ''2101(11)(a)'' and add, in its place, the text ''2101(12)''; and
■ b. In paragraph (f)(2), remove the text ''2101(11)(c)'' and add, in its place, the text ''2101(14)''.

■ 28. In § 15.812, amend Table 1 to paragraph (e)(2) by revising the first entry to read as follows:

§ 15.812 Pilots.

* * * * *

(e) * * * (2) * * *

TABLE 1 TO § 15.812(e)(2)—QUICK REFERENCE TABLE FOR FEDERAL PILOTAGE REQUIREMENTS FOR U.S.-INSPECTED TANK BARGES, NOT SAILING ON REGISTER

	Designated areas of pilotage waters (routes for which First-Class Pilot's licenses or MMC officer endorsements are issued)	Non-designated areas of pilotage waters (between the 3-mile line and the start of traditional pilotage routes)
Tank Barges greater than 10,000 GRT/GT, authorized by their COI to proceed beyond the Boundary Line, or operating on the Great Lakes.	First Class Pilot	Master, Mate, or Master, Mate (Pilot) of towing vessels may serve as pilot if he or she: 1. Is at least 21 years old; 2. Has an annual physical exam; [2] 3. Maintains current knowledge of the waters to be navigated; [1] and 4. Has at least 6 months' service in the deck department on towing vessels engaged in towing operations
* * *	* * *	* * *

[1] One roundtrip within the past 60 months.
[2] Annual physical exam does not apply to an individual who will serve as a pilot of a tank barge of less than 1,600 GRT.

* * * * *

PART 31—INSPECTION AND CERTIFICATION

■ 29. Revise the authority citation for part 31 to read as follows:

Authority: 46 U.S.C. 2103, 3205, 3306, 3307, 3703, 70034; 46 U.S.C. Chapter 701; 49 U.S.C. 5103, 5106; E.O. 12234, 45 FR 58801, 3 CFR, 1980 Comp., p. 277; E.O. 12777, 56 FR 54757, 3 CFR, 1991 Comp., p. 351; DHS Delegation 00170.1, Revision No. 01.2. Section 31.10–21 is also issued under the authority of sec. 4109, Pub. L. 101–380, 104 Stat. 515.

§ 31.10–16 [Amended]

■ 30. Amend § 31.10–16 as follows:
■ a. In paragraph (e)(1), remove the text ''17 Battery Place, Suite 1232, New York, NY 10004'' and add, in its place, the text ''180 Maiden Lane, Suite 903, New York, NY 10038''; and
■ b. In paragraph (e)(2), remove the text ''321 West 44th Street, New York, NY 10036'' and add, in its place, the text ''481 Eighth Avenue, New York, NY 10001''.

PART 67—DOCUMENTATION OF VESSELS

■ 31. Revise the authority citation for part 67 to read as follows:

Authority: 14 U.S.C. 664; 31 U.S.C. 9701; 42 U.S.C. 9118; 46 U.S.C. 2103, 2104, 2107, 12102, 12103, 12104, 12105, 12106, 12113, 12133, 12139; DHS Delegation 00170.1, Revision No. 01.2.

PART 71—INSPECTION AND CERTIFICATION

■ 32. Revise the authority citation for part 71 to read as follows:

Authority: 46 U.S.C. 2113, 3205, 3306, 3307, 70034; E.O. 12234, 45 FR 58801, 3 CFR, 1980 Comp., p. 277; E.O. 12777, 56 FR 54757, 3 CFR, 1991 Comp., p. 351; DHS Delegation 00170.1, Revision No. 01.2.

§ 71.30–10 [Amended]

■ 33. In § 71.30–10(a), after the word ''he'', add the words ''or she''.

§ 71.65–1 [Amended]

■ 34. In § 71.65–1(c), remove the text ''321 West 44th Street, New York, NY 10036'' and add, in its place, the text ''481 Eighth Avenue, New York, NY 10001''.

PART 91—INSPECTION AND CERTIFICATION

■ 35. Revise the authority citation for part 91 to read as follows:

Authority: 46 U.S.C. 3205, 3306, 3307, 70034; 46 U.S.C. Chapter 701; E.O. 12234, 45 FR 58801, 3 CFR, 1980 Comp., p. 277; E.O. 12777, 56 FR 54757, 3 CFR, 1991 Comp., p. 351; DHS Delegation 00170.1, Revision No. 01.2.

§ 91.25–50 [Amended]

■ 36. In § 91.25–50:
■ a. In paragraph (a), after the word ''he'', add the words ''or she''.
■ b. Add reserved paragraph (b).

§ 91.27–15 [Amended]

■ 37. In § 91.27–15:
■ a. In paragraph (a), after the word ''he'', add the words ''or she''.
■ b. Add reserved paragaph (b).

PART 107—INSPECTION AND CERTIFICATION

■ 38. Revise the authority citation for part 107 to read as follows:

Authority: 43 U.S.C. 1333; 46 U.S.C. 3306, 3307; 46 U.S.C. 3316; DHS Delegation 00170.1, Revision No. 01.2. Section 107.05 is also issued under the authority of 44 U.S.C. 3507.

§ 107.317 [Amended]

■ 39. In § 107.317(d), remove the text ''321 West 44th Street, New York, NY 10036'' and add, in its place, the text ''481 Eighth Avenue, New York, NY 10001''.

PART 126—INSPECTION AND CERTIFICATION

■ 40. Revise the authority citation for part 126 to read as follows:

Authority: 46 U.S.C. 3205, 3306, 3307, 70034; 46 U.S.C. Chapter 701; sec. 617, Pub. L. 111–281, 124 Stat. 2905; E.O. 11735, 38 FR 21243, 3 CFR 1971–1975 Comp., p. 793; DHS Delegation 00170.1, Revision No. 01.2.

§ 126.100 [Amended]

■ 41. In § 126.100, after the word ''he'', add the words ''or she''.

PART 144—CONSTRUCTION AND ARRANGEMENT

■ 42. Revise the authority citation for part 144 to read as follows:

Authority: 46 U.S.C. 3103, 3301, 3306, 3308, 3316, 8104, 8904; 33 CFR 1.05; DHS Delegation 00170.1, Revision No. 01.2.

§ 144.105 [Amended]

■ 43. In the introductory text of § 144.105, remove the text '', 144.910''.

PART 147—HAZARDOUS SHIPS' STORES

■ 44. Revise the authority citation for part 147 to read as follows:

Authority: 46 U.S.C. 3306; E.O. 12234, 45 FR 58801, 3 CFR, 1980 Comp., p. 277; DHS Delegation 00170.1, Revision No. 01.2.

■ 45. Revise the section heading to § 147.5 to read as follows:

§ 147.5 Commandant (CG–ENG); address.

* * * * *

■ 46. Revise the section heading to § 147.40 to read as follows:

§ 147.40 Materials requiring Commandant (CG–ENG) approval.

* * * * *

PART 172—SPECIAL RULES PERTAINING TO BULK CARGOES

■ 47. Revise the authority citation for part 172 to read as follows:

Authority: 46 U.S.C. 3306, 3703, 5115; E.O. 12234, 45 FR 58801, 3 CFR, 1980 Comp., p. 277; DHS Delegation 00170.1, Revision No. 01.2.

§ 172.040 [Amended]

■ 48. In § 172.040(b), remove the text ''17 Battery Place, Suite 1232, New York, New York 10004–1110'' and add, in its place, the text ''180 Maiden Lane, Suite 903, New York, NY 10038''.

PART 189—INSPECTION AND CERTIFICATION

■ 49. Revise the authority citation for part 189 to read as follows:

Authority: 46 U.S.C. 2113, 3306, 3307, 70034; E.O. 12234, 45 FR 58801, 3 CFR, 1980 Comp., p. 277; E.O. 12777, 56 FR 54757, 3 CFR, 1991 Comp., p. 351; DHS Delegation 00170.1, Revision No. 01.2.

§ 189.25–50 [Amended]

■ 50. In § 189.25–50:

■ a. In paragraph (a), after the word ''he'', add the words ''or she''.

■ b. Add reserved paragraph (b).

Michael Cunningham,

Chief, Office of Regulations and Administrative Law.

[FR Doc. 2022–00804 Filed 1–20–22; 8:45 am]

BILLING CODE 9110–04–P

DEPARTMENT OF VETERANS AFFAIRS

38 CFR Parts 36 and 42

RIN 2900–AR41

Federal Civil Penalties Inflation Adjustment Act Amendments

AGENCY: Department of Veterans Affairs.

ACTION: Final rule.

SUMMARY: The Department of Veterans Affairs (VA) is providing public notice of inflationary adjustments to the maximum civil monetary penalties assessed or enforced by VA, as implemented by the Federal Civil Penalties Inflation Adjustment Act Improvements Act of 2015, for calendar year 2022. VA may impose civil monetary penalties for false loan guaranty certifications. Also, VA may impose civil monetary penalties for fraudulent claims or written statements made in connection with VA programs generally. The Federal Civil Penalties Inflation Adjustment Act of 1990, as amended by the Federal Civil Penalties Inflation Adjustment Act Improvements Act of 2015, sets forth a formula that increases the maximum statutory amounts for civil monetary penalties and directs VA to give public notice of the new maximum amounts by regulation.

DATES: *Effective Date:* This rule is effective January 21, 2022.

FOR FURTHER INFORMATION CONTACT: Stephanie Li, Chief, Regulations Team, Loan Guaranty Service, Department of Veterans Affairs, 810 Vermont Avenue NW, Washington, DC 20420, (202) 632–8862. (This is not a toll-free number.)

SUPPLEMENTARY INFORMATION: On November 2, 2015, the President signed into law the Federal Civil Penalties Inflation Adjustment Act Improvements Act of 2015 (2015 Act) (Pub. L. 114–74, sec. 701, 129 Stat. 599), which amended the Federal Civil Penalties Inflation Adjustment Act of 1990 (Pub. L. 101–410, 104 Stat. 890), to improve the effectiveness of civil monetary penalties and to maintain their deterrent effect. The 2015 Act was codified in a note following 28 U.S.C. 2461. The 2015 Act requires agencies to publish annual adjustments for inflation, based on the percentage change between the Consumer Price Index (defined in the Act as the Consumer Price Index for all-urban consumers (CPI–U) published by the Department of Labor) for the month of October preceding the date of the adjustment and the prior year's October CPI–U. 28 U.S.C. 2461 note, secs. 4(a) and (b) and 5(b)(1). This rule implements the 2022 calendar year inflation adjustment amounts.

Under 38 U.S.C. 3710(g)(4)(B), VA is authorized to levy civil monetary penalties against private lenders that originate VA-guaranteed loans if a lender falsely certifies that they have complied with certain credit information and loan processing standards, as set forth by chapter 37, title 38 U.S.C. and part 36, title 38 CFR. Under section 3710(g)(4)(B), any lender who knowingly and willfully makes such a false certification shall be liable to the United States Government for a civil penalty equal to two times the amount of the Secretary's loss on the loan involved or to another appropriate amount, not to exceed $10,000, whichever is greater. VA implemented the penalty amount in 38 CFR 36.4340(k)(1)(i) and (k)(3). On December 15, 2021, the Office of Management and Budget (OMB) issued Circular M–22–07. This circular reflects that the October 2020 CPI–U was 260.388 and the October 2021 CPI–U was 276.589, resulting in an inflation adjustment multiplier of 1.06222. Accordingly, the calendar year 2022 inflation revision imposes an adjustment from $23,607 to $25,076.

Under 31 U.S.C. 3802, VA can impose monetary penalties against any person who makes, presents, or submits a claim or written statement to VA that the person knows or has reason to know is false, fictitious, or fraudulent, or who engages in other covered conduct. The statute permits, in addition to any other remedy that may be prescribed by law, a civil penalty of not more than $5,000 for each claim. 31 U.S.C. 3802(a)(1) and (2). VA implemented the penalty amount in 38 CFR 42.3(a)(1) and (b)(1). As previously noted, OMB Circular M–22–07 reflects an inflation adjustment multiplier of 1.06222. Therefore, the calendar year 2022 inflation revision imposes an adjustment from $11,803 to $12,537.

Accordingly, VA is revising 38 CFR 36.4340(k)(1)(i) and (3) and 38 CFR 42.3(a)(1) and (b)(1) to reflect the 2022 inflationary adjustments for civil monetary penalties assessed or enforced by VA.

Administrative Procedure Act

The Secretary of Veterans Affairs finds that there is good cause under 5 U.S.C. 553(b)(B) and (d)(3) to dispense with the opportunity for prior notice and public comment and to publish this rule with an immediate effective date. The 2015 Act requires agencies to make annual adjustments for inflation to the allowed amounts of civil monetary penalties ''notwithstanding section 553 of title 5, United States Code.'' 28 U.S.C. 2461 note, sec. 4(a) and (b). The penalty adjustments, and the methodology used to determine the adjustments, are set by the terms of the 2015 Act. VA has no discretion to make changes in those areas. Therefore, an opportunity for prior notice and public comment and a delayed effective date are unnecessary.

Executive Orders 12866 and 13563

Executive Orders 12866 and 13563 direct agencies to assess the costs and benefits of available regulatory

alternatives and, when regulation is necessary, to select regulatory approaches that maximize net benefits (including potential economic, environmental, public health and safety effects, and other advantages; distributive impacts; and equity). Executive Order 13563 (Improving Regulation and Regulatory Review) emphasizes the importance of quantifying both costs and benefits, reducing costs, harmonizing rules, and promoting flexibility. The Office of Information and Regulatory Affairs has determined that this rule is not a significant regulatory action under Executive Order 12866. The Regulatory Impact Analysis associated with this rulemaking can be found as a supporting document at *www.regulations.gov.*

Regulatory Flexibility Act

The Regulatory Flexibility Act, 5 U.S.C. 601 *et seq.* (RFA), imposes certain requirements on Federal agency rules that are subject to the notice and comment requirements of the Administrative Procedure Act (APA), 5 U.S.C. 553(b). This final rule is exempt from the notice and comment requirements of the APA because the 2015 Act directed the Department to issue the annual adjustments without regard to section 553 of the APA. Therefore, the requirements of the RFA applicable to notice and comment rulemaking do not apply to this rule. Accordingly, the Department is not required either to certify that the final rule would not have a significant economic impact on a substantial number of small entities or to conduct a regulatory flexibility analysis.

Unfunded Mandates

The Unfunded Mandates Reform Act of 1995 requires, at 2 U.S.C. 1532, that agencies prepare an assessment of anticipated costs and benefits before issuing any rule that may result in the expenditure by State, local, and tribal governments, in the aggregate, or by the private sector, of $100 million or more (adjusted annually for inflation) in any one year. This final rule will have no such effect on State, local, and tribal governments, or on the private sector.

Paperwork Reduction Act

This final rule contains no provisions constituting a collection of information under the Paperwork Reduction Act of 1995 (44 U.S.C. 3501–3521).

Assistance Listing

The Assistance Listing number and title for the program affected by this document is 64.114, Veterans Housing Guaranteed and Insured Loans.

Congressional Review Act

Pursuant to Subtitle E of the Small Business Regulatory Enforcement Fairness Act of 1996 (known as the Congressional Review Act) (5 U.S.C. 801 *et seq.*), the Office of Information and Regulatory Affairs designated this rule as not a major rule, as defined by 5 U.S.C. 804(2).

List of Subjects

38 CFR Part 36

Condominiums, Housing, Individuals with disabilities, Loan programs-housing and community development, Loan programs-veterans, Manufactured homes, Mortgage insurance, Reporting and recordkeeping requirements, Veterans.

38 CFR Part 42

Administrative practice and procedure, Claims, Fraud, Penalties.

Signing Authority

Denis McDonough, Secretary of Veterans Affairs, approved this document on January 14, 2022, and authorized the undersigned to sign and submit the document to the Office of the Federal Register for publication electronically as an official document of the Department of Veterans Affairs.

Jeffrey M. Martin,

Assistant Director, Office of Regulation Policy & Management, Office of General Counsel, Department of Veterans Affairs.

For the reasons stated in the preamble, the Department of Veterans Affairs amends 38 CFR parts 36 and 42 as set forth below:

PART 36—LOAN GUARANTY

■ 1. The authority citation for part 36 continues to read as follows:

Authority: 38 U.S.C. 501 and 3720.

§ 36.4340 [Amended]

■ 2. In § 36.4340, amend paragraphs (k)(1)(i) introductory text and (k)(3) by removing ''$23,607'' and adding in its place ''$25,076''.

PART 42—STANDARDS IMPLEMENTING THE PROGRAM FRAUD CIVIL REMEDIES ACT

■ 3. The authority citation for part 42 continues to read as follows:

Authority: Pub. L. 99–509, secs. 6101–6104, 100 Stat. 1874, codified at 31 U.S.C. 3801–3812.

§ 42.3 [Amended]

■ 4. In § 42.3, amend paragraphs (a)(1)(iv) and (b)(1)(ii) by removing ''$11,803'' and adding in its place ''$12,537''.

[FR Doc. 2022–01135 Filed 1–20–22; 8:45 am]

BILLING CODE 8320–01–P

FEDERAL COMMUNICATIONS COMMISSION

47 CFR Part 73

[MB Docket No. 21–123; RM–11890; DA 22–26; FR ID 67332]

Television Broadcasting Services Fort Bragg, California

AGENCY: Federal Communications Commission.

ACTION: Final rule.

SUMMARY: On September 20, 2021, the Media Bureau, Video Division (Bureau) issued a *Notice of Proposed Rulemaking* (*NPRM*) in response to a petition for rulemaking filed by One Ministries, Inc. (Petitioner), requesting the allotment of reserved noncommercial educational channel *4 to Fort Bragg, California, in the Table of Allotments as the community's second local service. For the reasons set forth in the *Report and Order* referenced below, the Bureau amends FCC regulations to allot channel *4 at Fort Bragg. The newly allotted channel will be authorized pursuant to the Commission's application and selection procedures for reserved noncommercial educational television stations.

DATES: Effective January 21, 2022.

FOR FURTHER INFORMATION CONTACT: Joyce Bernstein, Media Bureau, at (202) 418–1647 or *Joyce.Bernstein@fcc.gov.*

SUPPLEMENTARY INFORMATION: The proposed rule was published at 86 FR 54144 on September 30, 2021. The Petitioner filed comments in support of the petition, as required by the Commission's rules, reaffirming its commitment to apply for channel *4 and if authorized, to build a station promptly. No other comments were filed. We believe the public interest would be served by allotting channel *4 at Fort Bragg, California. Fort Bragg (population 7,179) clearly qualifies for community of license status for allotment purposes. In addition, the proposal would result in a second local service to Fort Bragg under the Commission's third allotment priority. Moreover, the allotment is consistent with the minimum geographic spacing requirements for new DTV allotments in

the Commission's rules, and the allotment point complies with the rules as the entire community of Fort Bragg is encompassed by the 35 dBμ contour.

This is a synopsis of the Commission's *Report and Order,* MB Docket No. 21–123; RM–11890; DA 22–26, adopted January 11, 2022, and released January 11, 2022. The full text of this document is available for download at *https://www.fcc.gov/edocs.* To request materials in accessible formats for people with disabilities (braille, large print, electronic files, audio format), send an email to *fcc504@fcc.gov* or call the Consumer & Governmental Affairs Bureau at 202–418–0530 (voice), 202–418–0432 (tty).

This document does not contain information collection requirements subject to the Paperwork Reduction Act of 1995, Public Law 104–13. In addition, therefore, it does not contain any proposed information collection burden ''for small business concerns with fewer than 25 employees,'' pursuant to the Small Business Paperwork Relief Act of 2002, Public Law 107–198, *see* 44 U.S.C. 3506(c)(4). Provisions of the Regulatory Flexibility Act of 1980, 5 U.S.C. 601–612, do not apply to this proceeding.

The Commission will send a copy of this *Report and Order* in a report to be sent to Congress and the Government Accountability Office pursuant to the Congressional Review Act, *see* 5 U.S.C. 801(a)(1)(A).

List of Subjects in 47 CFR Part 73

Television.

Federal Communications Commission.

Thomas Horan,

Chief of Staff, Media Bureau.

Final Rule

For the reasons discussed in the preamble, the Federal Communications Commission amends 47 CFR part 73 as follows:

PART 73—RADIO BROADCAST SERVICE

■ 1. The authority citation for part 73 continues to read as follows:

Authority: 47 U.S.C. 154, 155, 301, 303, 307, 309, 310, 334, 336, 339.

■ 2. In § 73.622(j), amend the Table of Allotments, under California, by revising the entry for Fort Bragg to read as follows:

§ 73.622 Table of Allotments.

* * * * *

(j) * * *

Community	Channel No.
* * * * *	
CALIFORNIA	
* * * * *	
Fort Bragg	*4, 8
* * * * *	

[FR Doc. 2022–01153 Filed 1–20–22; 8:45 am]

BILLING CODE 6712–01–P

FEDERAL COMMUNICATIONS COMMISSION

47 CFR Part 73

[MB Docket No. 21–124; RM–11891; DA 22–32; FR ID 67662]

Television Broadcasting Services Henderson, Nevada

AGENCY: Federal Communications Commission.

ACTION: Final rule.

SUMMARY: On July 28, 2021, the Media Bureau, Video Division (Bureau) issued a *Notice of Proposed Rulemaking* (*NPRM*) in response to a petition for rulemaking filed by KVUU–TV Broadcasting Corporation (Petitioner), the licensee of KVUU, channel 9, Henderson, Nevada, requesting the substitution of channel 24 for channel 9 at Henderson in the Table of Allotments. For the reasons set forth in the *Report and Order* referenced below, the Bureau amends FCC regulations to substitute channel 24 for channel 9 at Henderson.

DATES: Effective January 21, 2022.

FOR FURTHER INFORMATION CONTACT: Joyce Bernstein, Media Bureau, at (202) 418–1647 or *Joyce.Bernstein@fcc.gov.*

SUPPLEMENTARY INFORMATION: The proposed rule was published at 86 FR 41916 on August 4, 2021. The Petitioner filed comments in support of the petition reaffirming its commitment to apply for channel 24. Gray Television, LLC, which acquired the station, also filed comments in support of the petition and stating its commitment to apply for channel 24. In support of its channel substitution request, the Petitioner states that the Commission has recognized that VHF channels have certain characteristics that pose challenges for their use in providing digital television service, and that KVVU–TV has received numerous complaints of poor or no reception from viewers within its noise limited contour. While the channel 24 noise limited contour will not fully encompass the existing channel 9 contour, only 152 persons would lose service from KVVU, and no viewers would lose access to their first or second over-the-air television service. While 152 persons are predicted to lose service from KVVU, the Commission considers such a loss to be *de minimis.*

This is a synopsis of the Commission's *Report and Order,* MB Docket No. 21–124; RM–11891; DA 22–32, adopted January 12, 2022, and released January 12, 2022. The full text of this document is available for download at *https://www.fcc.gov/edocs.* To request materials in accessible formats for people with disabilities (braille, large print, electronic files, audio format), send an email to *fcc504@fcc.gov* or call the Consumer & Governmental Affairs Bureau at 202–418–0530 (voice), 202–418–0432 (tty).

This document does not contain information collection requirements subject to the Paperwork Reduction Act of 1995, Public Law 104–13. In addition, therefore, it does not contain any proposed information collection burden ''for small business concerns with fewer than 25 employees,'' pursuant to the Small Business Paperwork Relief Act of 2002, Public Law 107–198, *see* 44 U.S.C. 3506(c)(4). Provisions of the Regulatory Flexibility Act of 1980, 5 U.S.C. 601–612, do not apply to this proceeding.

The Commission will send a copy of this *Report and Order* in a report to be sent to Congress and the Government Accountability Office pursuant to the Congressional Review Act, *see* 5 U.S.C. 801(a)(1)(A).

List of Subjects in 47 CFR Part 73

Television.

Federal Communications Commission.

Thomas Horan,

Chief of Staff, Media Bureau.

Final Rule

For the reasons discussed in the preamble, the Federal Communications Commission amends 47 CFR part 73 as follows:

PART 73—RADIO BROADCAST SERVICE

■ 1. The authority citation for part 73 continues to read as follows:

Authority: 47 U.S.C. 154, 155, 301, 303, 307, 309, 310, 334, 336, 339.

■ 2. In § 73.622(j), amend the Table of Allotments, under Nevada, by revising the entry for Henderson to read as follows:

§ 73.622 Digital television table of allotments.

* * * * *

(j) * * *

Community	Channel No.
* * * * *	
NEVADA	
* * * * *	
Henderson	24
* * * * *	

[FR Doc. 2022–01088 Filed 1–20–22; 8:45 am]

BILLING CODE 6712–01–P

Proposed Rules

Federal Register
Vol. 87, No. 14
Friday, January 21, 2022

This section of the FEDERAL REGISTER contains notices to the public of the proposed issuance of rules and regulations. The purpose of these notices is to give interested persons an opportunity to participate in the rule making prior to the adoption of the final rules.

DEPARTMENT OF ENERGY

10 CFR Part 430

[EERE–2020–BT–STD–0039]

RIN 1904–AF00

Energy Conservation Program: Energy Conservation Standards for Miscellaneous Refrigeration Products, Webinar and Availability of the Preliminary Technical Support Document

AGENCY: Office of Energy Efficiency and Renewable Energy, Department of Energy.

ACTION: Notification of a webinar and availability of preliminary technical support document.

SUMMARY: The U.S. Department of Energy (''DOE'' or ''the Department'') will hold a webinar to discuss and receive comments on the preliminary analysis it has conducted for purposes of evaluating energy conservation standards for miscellaneous refrigeration products (''MREFs''). The meeting will cover the analytical framework, models, and tools that DOE is using to evaluate potential standards for these products; the results of preliminary analyses performed by DOE; the potential energy conservation standard levels derived from these analyses that DOE could consider for this product should it determine that proposed amendments are necessary; and any other issues relevant to the evaluation of energy conservation standards for MREFs. In addition, DOE encourages written comments on these subjects. To inform interested parties and to facilitate this process, DOE has prepared an agenda, a preliminary technical support document (''TSD''), and briefing materials, which are available on the DOE website at: *www1.eere.energy.gov/buildings/appliance_standards/standards.aspx?productid=39&action=viewlive.*

DATES:

Meeting: DOE will hold a webinar on Thursday, February 17, 2022, from 12:30 p.m. to 4:00 p.m. See section IV, ''Public Participation,'' for webinar registration information, participant instructions and information about the capabilities available to webinar participants.

Comments: Written comments and information will be accepted on or before, March 22, 2022.

ADDRESSES: Interested persons are encouraged to submit comments using the Federal eRulemaking Portal at *www.regulations.gov.* Follow the instructions for submitting comments. Alternatively, interested persons may submit comments, identified by docket number EERE–2020–BT–STD–0039, by any of the following methods:

1. *Federal eRulemaking Portal: www.regulations.gov.* Follow the instructions for submitting comments.

2. *Email:* To *MRP2020STD0039@ee.doe.gov.* Include docket number EERE–2020–BT–STD–0039 in the subject line of the message.

No telefacsimiles (''faxes'') will be accepted. For detailed instructions on submitting comments and additional information on this process, see section IV of this document.

Although DOE has routinely accepted public comment submissions through a variety of mechanisms, including postal mail and hand delivery/courier, the Department has found it necessary to make temporary modifications to the comment submission process in light of the ongoing corona virus 2019 (''COVID–19'') pandemic. DOE is currently suspending receipt of public comments via postal mail and hand delivery/courier. If a commenter finds that this change poses an undue hardship, please contact Appliance Standards Program staff at (202) 586–1445 to discuss the need for alternative arrangements. Once the COVID–19 pandemic health emergency is resolved, DOE anticipates resuming all of its regular options for public comment submission, including postal mail and hand delivery/courier.

Docket: The docket for this activity, which includes **Federal Register** notices, comments, public meeting transcripts, and other supporting documents/materials, is available for review at *www.regulations.gov.* All documents in the docket are listed in the *www.regulations.gov* index. However, some documents listed in the index, such as those containing information that is exempt from public disclosure, may not be publicly available.

The docket web page can be found at *www.regulations.gov/docket/EERE-2020-BT-STD-0039.* The docket web page contains instructions on how to access all documents, including public comments in the docket. See section IV for information on how to submit comments through *www.regulations.gov.*

FOR FURTHER INFORMATION CONTACT:

Dr. Stephanie Johnson, U.S. Department of Energy, Office of Energy Efficiency and Renewable Energy, Building Technologies, EE–2J, 1000 Independence Avenue SW, Washington, DC 20585–0121. Telephone: (202) 287–1943. Email: *ApplianceStandardsQuestions@ee.doe.gov.*

Mr. Michael Kido, U.S. Department of Energy, Office of the General Counsel, GC–33, 1000 Independence Avenue SW, Washington, DC 20585–0121. Telephone: (202) 586–8145. Email: *Michael.Kido@hq.doe.gov.*

For further information on how to submit a comment, review other public comments and the docket, contact the Appliance and Equipment Standards Program staff at (202) 287–1445 or by email: *ApplianceStandardsQuestions@ee.doe.gov.*

SUPPLEMENTARY INFORMATION:

Table of Contents

I. Introduction
  A. Authority
  B. Rulemaking Process
  C. Deviation from Appendix A
II. Background
  A. Current Standards
  B. Current Process
III. Summary of the Analyses Performed by DOE
  A. Market and Technology Assessment
  B. Screening Analysis
  C. Engineering Analysis
  D. Markups Analysis
  E. Energy Use Analysis
  F. Life-Cycle Cost and Payback Period Analyses
  G. National Impact Analysis
IV. Public Participation
  A. Participation in the Webinar
  B. Procedure for Submitting Prepared General Statements for Distribution
  C. Conduct of the Webinar
  D. Submission of Comments
V. Approval of the Office of the Secretary

I. Introduction

A. Authority

The Energy Policy and Conservation Act, as amended (''EPCA''),[1] authorizes DOE to regulate the energy efficiency of a number of consumer products and certain industrial equipment. (42 U.S.C. 6291–6317) Title III, Part B [2] of EPCA established the Energy Conservation Program for Consumer Products Other Than Automobiles, which, in addition to identifying particular consumer products and commercial equipment as covered under the statute, permits the Secretary of Energy to classify additional types of consumer products as covered products. (42 U.S.C. 6292(a)(20)) DOE added MREFs as covered products through a final determination of coverage published in the **Federal Register** on July 18, 2016 (the ''July 2016 Final Coverage Determination''). 81 FR 46768. MREFs are consumer refrigeration products other than refrigerators, refrigerator-freezers, or freezers, which include coolers and combination cooler refrigeration products. 10 CFR 430.2. MREFs include refrigeration products such as coolers (*e.g.,* wine chillers and other specialty products) and combination cooler refrigeration products (*e.g.,* wine chillers and other specialty compartments combined with a refrigerator, freezer, or refrigerator-freezer).

EPCA further provides that, not later than 6 years after the issuance of any final rule establishing or amending a standard, DOE must publish either a notification of determination that standards for the product do not need to be amended, or a notice of proposed rulemaking (''NOPR'') including new proposed energy conservation standards (proceeding to a final rule, as appropriate). (42 U.S.C. 6295(m)(1)) Not later than three years after issuance of a final determination not to amend standards, DOE must publish either a notice of determination that standards for the product do not need to be amended, or a NOPR including new proposed energy conservation standards (proceeding to a final rule, as appropriate). (42 U.S.C. 6295(m)(3)(B))

Under EPCA, any new or amended energy conservation standard must be designed to achieve the maximum improvement in energy efficiency that DOE determines is technologically feasible and economically justified. (42 U.S.C. 6295(o)(2)(A)) Furthermore, the new or amended standard must result in a significant conservation of energy. (42 U.S.C. 6295(o)(3)(B))

DOE is publishing this Preliminary Analysis to collect data and information to inform its decision consistent with its obligations under EPCA.

B. Rulemaking Process

DOE must follow specific statutory criteria for prescribing new or amended standards for covered products, including MREFs. As noted, EPCA requires that any new or amended energy conservation standard prescribed by the Secretary of Energy (''Secretary'') be designed to achieve the maximum improvement in energy efficiency (or water efficiency for certain products specified by EPCA) that is technologically feasible and economically justified. (42 U.S.C. 6295(o)(2)(A)) Furthermore, DOE may not adopt any standard that would not result in the significant conservation of energy. (42 U.S.C. 6295(o)(3)) The Secretary may not prescribe an amended or new standard that will not result in significant conservation of energy, or is not technologically feasible or economically justified. (42 U.S.C. 6295(o)(3))

To adopt any new or amended standards for a covered product, DOE must determine that such action would result in significant energy savings. (42 U.S.C. 6295(o)(3)(B)) Although the term ''significant'' is not defined in the EPCA, the U.S. Court of Appeals, for the District of Columbia Circuit in *Natural Resources Defense Council* v. *Herrington,* 768 F.2d 1355, 1373 (D.C. Cir. 1985), opined that Congress intended ''significant'' energy savings in the context of EPCA to be savings that were not ''genuinely trivial.''

The significance of energy savings offered by a new or amended energy conservation standard cannot be determined without knowledge of the specific circumstances surrounding a given rulemaking.[3] For example, the United States rejoined the Paris Agreement on February 19, 2021. As part of that agreement, the United States has committed to reducing GHG emissions in order to limit the rise in mean global temperature. As such, energy savings that reduce GHG emissions have taken on greater importance. Additionally, some covered products and equipment have most of their energy consumption occur during periods of peak energy demand. The impacts of these products on the energy infrastructure can be more pronounced than products with relatively constant demand. In evaluating the significance of energy savings, DOE considers differences in primary energy and FFC effects for different covered products and equipment when determining whether energy savings are significant. Primary energy and FFC effects include the energy consumed in electricity production (depending on load shape), in distribution and transmission, and in extracting, processing, and transporting primary fuels (*i.e.,* coal, natural gas, petroleum fuels), and thus present a more complete picture of the impacts of energy conservation standards.

Accordingly, DOE evaluates the significance of energy savings on a case-by-case basis. DOE estimates a combined total of 0.45 quads of FFC energy savings at the max-tech efficiency levels for MREFs. This represents 44.4 percent energy savings relative to the no-new-standards case energy consumption for MREFs. DOE has initially determined the energy savings for the candidate standard levels considered in this preliminary analysis are ''significant'' within the meaning of 42 U.S.C. 6295(o)(3)(B).

To determine whether a standard is economically justified, EPCA requires that DOE determine whether the benefits of the standard exceed its burdens by considering, to the greatest extent practicable, the following seven factors:

(1) The economic impact of the standard on the manufacturers and consumers of the products subject to the standard;

(2) The savings in operating costs throughout the estimated average life of the covered products in the type (or class) compared to any increase in the price, initial charges, or maintenance expenses for the covered products that are likely to result from the standard;

(3) The total projected amount of energy (or as applicable, water) savings likely to result directly from the standard;

(4) Any lessening of the utility or the performance of the products likely to result from the standard;

(5) The impact of any lessening of competition, as determined in writing by the Attorney General, that is likely to result from the standard;

(6) The need for national energy and water conservation; and

(7) Other factors the Secretary of Energy (Secretary) considers relevant.
(42 U.S.C. 6295(o)(2)(B)(i)(I)–(VII))

DOE fulfills these and other applicable requirements by conducting a series of analyses throughout the rulemaking process. Table I.1 shows the individual analyses that are performed

[1] All references to EPCA in this document refer to the statute as amended through the Energy Act of 2020, Public Law 116–260 (Dec. 27, 2020).

[2] For editorial reasons, upon codification in the U.S. Code, Part B was redesignated Part A.

[3] *See* 86 FR 70892, 70901 (Dec. 13, 2021).

to satisfy each of the requirements within EPCA.

TABLE I.1—EPCA REQUIREMENTS AND CORRESPONDING DOE ANALYSIS

EPCA requirement	Corresponding DOE analysis
Significant Energy Savings	• Shipments Analysis. • National Impact Analysis. • Energy Use Analysis.
Technological Feasibility	• Market and Technology Assessment. • Screening Analysis. • Engineering Analysis.
Economic Justification:	
1. Economic impact on manufacturers and consumers	• Manufacturer Impact Analysis. • Life-Cycle Cost and Payback Period Analysis. • Life-Cycle Cost Subgroup Analysis.
2. Lifetime operating cost savings compared to increased cost for the product.	• Shipments Analysis. • Markups for Product Price Analysis. • Energy Use Analysis. • Life-Cycle Cost and Payback Period Analysis.
3. Total projected energy savings	• Shipments Analysis. • National Impact Analysis.
4. Impact on utility or performance	• Screening Analysis. • Engineering Analysis.
5. Impact of any lessening of competition	• Manufacturer Impact Analysis
6. Need for national energy and water conservation	• Shipments Analysis. • National Impact Analysis.
7. Other factors the Secretary considers relevant	• Employment Impact Analysis. • Utility Impact Analysis. • Emissions Analysis. • Monetization of Emission Reductions Benefits. • Regulatory Impact Analysis.

Further, EPCA establishes a rebuttable presumption that a standard is economically justified if the Secretary finds that the additional cost to the consumer of purchasing a product complying with an energy conservation standard level will be less than three times the value of the energy savings during the first year that the consumer will receive as a result of the standard, as calculated under the applicable test procedure. (42 U.S.C. 6295(o)(2)(B)(iii))

EPCA also contains what is known as an ''anti-backsliding'' provision, which prevents the Secretary from prescribing any amended standard that either increases the maximum allowable energy use or decreases the minimum required energy efficiency of a covered product. (42 U.S.C. 6295(o)(1)) Also, the Secretary may not prescribe an amended or new standard if interested persons have established by a preponderance of the evidence that the standard is likely to result in the unavailability in the United States in any covered product type (or class) of performance characteristics (including reliability), features, sizes, capacities, and volumes that are substantially the same as those generally available in the United States. (42 U.S.C. 6295(o)(4))

Additionally, EPCA specifies requirements when promulgating an energy conservation standard for a covered product that has two or more subcategories. DOE must specify a different standard level for a type or class of product that has the same function or intended use, if DOE determines that products within such group: (A) Consume a different kind of energy from that consumed by other covered products within such type (or class); or (B) have a capacity or other performance-related feature which other products within such type (or class) do not have and such feature justifies a higher or lower standard. (42 U.S.C. 6295(q)(1)) In determining whether a performance-related feature justifies a different standard for a group of products, DOE must consider such factors as the utility to the consumer of the feature and other factors DOE deems appropriate. *Id.* Any rule prescribing such a standard must include an explanation of the basis on which such higher or lower level was established. (42 U.S.C. 6295(q)(2))

Finally, pursuant to the amendments contained in the Energy Independence and Security Act of 2007 (EISA 2007), Public Law 110–140, any final rule for new or amended energy conservation standards promulgated after July 1, 2010, is required to address standby mode and off mode energy use. (42 U.S.C. 6295(gg)(3)) Specifically, when DOE adopts a standard for a covered product after that date, it must, if justified by the criteria for adoption of standards under EPCA (42 U.S.C. 6295(o)), incorporate standby mode and off mode energy use into a single standard, or, if that is not feasible, adopt a separate standard for such energy use for that product. (42 U.S.C. 6295(gg)(3)(A)–(B)) DOE's current test procedure for MREFs measures the energy use of these products during extended time periods that include periods when the compressor and other key components are cycled off. All of the energy these products use during the ''off cycles'' is already included in the measurements. By measuring the energy use during ''off cycles,'' the current test procedure already addresses EPCA's requirement to include standby mode and off mode energy consumption in the overall energy descriptor for MREFs. See 86 FR 56790 (October 12, 2021) (final rule amending the test procedures for consumer refrigeration products). As a result, DOE's current energy conservation standards and any amended energy conservation standards account for such energy use.

Before proposing a standard, DOE typically seeks public input on the analytical framework, models, and tools that DOE intends to use to evaluate standards for the product at issue and the results of the preliminary analyses DOE performed for the product.

DOE is examining whether to amend the current standards pursuant to its

obligations under EPCA. This document announces the availability of the preliminary technical support document (''TSD''), which details the preliminary analyses and summarizes the preliminary results of DOE's analyses. In addition, DOE is announcing a public meeting to solicit feedback from interested parties on its analytical framework, models, and preliminary results.

C. Deviation From Appendix A

In accordance with section 3(a) of 10 CFR part 430, subpart C, appendix A (''appendix A''), DOE notes that it is deviating from the provision in appendix A regarding the pre-NOPR stages for an energy conservation standards rulemaking. (*See* 86 FR 70892 (Dec. 13, 2021) (effective January 12, 2022)) Section 6(a)(2) of appendix A states that if the Department determines it is appropriate to proceed with a rulemaking (after initiating the rulemaking process through an early assessment), the preliminary stages of a rulemaking to issue or amend an energy conservation standard that DOE will undertake will be a framework document and preliminary analysis, or an advance notice of proposed rulemaking (''ANOPR''). DOE is opting to deviate from this step by publishing a preliminary analysis without a framework document. A framework document is intended to introduce and summarize the various analyses DOE conducts during the rulemaking process and requests initial feedback from interested parties. As discussed further in the following section, prior to this notification of the preliminary analysis, DOE issued an early assessment request for information (''RFI'') in which DOE identified and sought comment on the analyses conducted in support of the most recent energy conservation standards rulemaking (81 FR 75194; Oct. 28, 2016 (the ''October 2016 Direct Final Rule'')). 85 FR 78964, 78965–78966 (Dec. 8, 2020) (the ''December 2020 Early Assessment Review RFI''). DOE provided a 75-day comment period for the early assessment RFI. 85 FR 78964. As DOE is intending to rely on substantively the same analytical methods as in the most recent rulemaking, publication of a framework document would be largely redundant with the published early assessment RFI. As such, DOE is not publishing a framework document.

Section 6(d)(2) of appendix A specifies that the length of the public comment period for pre-NOPR rulemaking documents will vary depending upon the circumstances of the particular rulemaking, but will not be less than 75 calendar days. For this preliminary analysis, DOE has opted to instead provide a 60-day comment period. As stated, DOE requested comment in the December 2020 Early Assessment Review RFI on the analysis conducted in support of the October 2016 Direct Final Rule and provided stakeholders a 75-day comment period. For this preliminary analysis, DOE has relied on many of the same analytical assumptions and approaches as used in the previous rulemaking and has determined that a 60-day comment period in conjunction with the prior 75-day comment period provides sufficient time for interested parties to review the preliminary analysis and develop comments.

II. Background

A. Current Standards

As noted, DOE added MREFs as covered products through its July 2016 Final Coverage Determination. 81 FR 46768. In that determination, DOE noted that MREFs, on average, consume more than 150 kilowatt hours per year (''kWh/yr'') and that the aggregate annual national energy use of these products exceeds 4.2 terawatt hours (''TWh''). 81 FR 46768, 46775. In addition to establishing coverage, the July 2016 Final Coverage Determination established definitions for ''miscellaneous refrigeration products,'' ''coolers,'' and ''combination cooler refrigeration products'' in 10 CFR 430.2. 81 FR 46768, 46791–46792.

In the October 2016 Direct Final Rule, DOE adopted energy conservation standards for MREFs consistent with the recommendations from a negotiated rulemaking working group established under the Appliance Standards and Rulemaking Federal Advisory Committee. 81 FR 75194. Concurrent with the October 2016 Direct Final Rule, DOE published a NOPR in which it proposed and requested comments on the standards set forth in the direct final rule. 81 FR 74950. On May 26, 2017, DOE published a notice in the **Federal Register** in which it determined that the comments received in response to the October 2016 Direct Final Rule did not provide a reasonable basis for withdrawing the rule and, therefore, confirmed the adoption of the energy conservation standards established in that direct final rule. 82 FR 24214.

These current standards for MREFs are set forth in DOE's regulations at 10 CFR 430.32(aa)(1)–(2) and are repeated solely for reference in Table II.1 to aid the reader.

TABLE II.1—FEDERAL ENERGY CONSERVATION STANDARDS FOR MREFS

Product class	Equations for maximum energy use (kWh/yr)
1. Built-in compact coolers	7.88AV + 155.8.
2. Built-in coolers	7.88AV + 155.8.
3. Freestanding compact coolers	7.88AV + 155.8.
4. Freestanding coolers	7.88AV + 155.8.
C–3A. Cooler with all-refrigerator—automatic defrost	4.57AV + 130.4.
C–3A–BI. Built-in cooler with all-refrigerator—automatic defrost	5.19AV + 147.8.
C–9. Cooler with upright freezer with automatic defrost without an automatic icemaker	5.58AV + 147.7.
C–9–BI. Built-in cooler with upright freezer with automatic defrost without an automatic icemaker	6.38AV + 168.8.
C–9I. Cooler with upright freezer with automatic defrost with an automatic icemaker	5.58AV + 231.7.
C–9I–BI. Built-in cooler with upright freezer with automatic defrost with an automatic icemaker	6.38AV + 252.8.
C–13A. Compact cooler with all-refrigerator—automatic defrost	5.93AV + 193.7.
C–13A–BI. Built-in compact cooler with all-refrigerator—automatic defrost	6.52AV + 213.1.

AV = Total adjusted volume, expressed in ft^3, as determined in appendix A to subpart B of 10 CFR part 430.

B. Current Process

In the December 2020 Early Assessment Review RFI, DOE published a notice that it was initiating an early assessment review to determine whether any new or amended standards would satisfy the relevant requirements of EPCA for a new or amended energy conservation standard for MREFs and a request for information. 85 FR 78964.

Comments received to date as part of the current process have helped DOE identify and resolve issues related to the preliminary analyses. Chapter 2 of the preliminary TSD summarizes and addresses the comments received.

III. Summary of the Analyses Performed by DOE

For the products covered in this preliminary analysis, DOE conducted in-depth technical analyses in the following areas: (1) Engineering; (2) markups to determine product price; (3) energy use; (4) life cycle cost (''LCC'') and payback period (''PBP''); and (5) national impacts. The preliminary TSD that presents the methodology and results of each of these analyses is available at *www.regulations.gov/docket/EERE-2020-BT-STD-0039.*

DOE also conducted, and has included in the preliminary TSD, several other analyses that support the major analyses or are preliminary analyses that will be expanded if DOE determines that a NOPR is warranted to propose amended energy conservation standards. These analyses include: (1) The market and technology assessment; (2) the screening analysis, which contributes to the engineering analysis; and (3) the shipments analysis, which contributes to the LCC and PBP analysis and the national impact analysis (''NIA''). In addition to these analyses, DOE has begun preliminary work on the manufacturer impact analysis and has identified the methods to be used for the consumer subgroup analysis, the emissions analysis, the employment impact analysis, the regulatory impact analysis, and the utility impact analysis. DOE will expand on these analyses in a NOPR, should one be issued.

A. Market and Technology Assessment

DOE develops information in the market and technology assessment that provides an overall picture of the market for the products concerned, including general characteristics of the products, the industry structure, manufacturers, market characteristics, and technologies used in the products. This activity includes both quantitative and qualitative assessments, based primarily on publicly available information. The subjects addressed in the market and technology assessment include: (1) A determination of the scope of the rulemaking and product classes, (2) manufacturers and industry structure, (3) existing efficiency programs, (4) shipments information, (5) market and industry trends, and (6) technologies or design options that could improve the energy efficiency of the product.

See chapter 3 of the preliminary TSD for further discussion of the market and technology assessment.

B. Screening Analysis

DOE uses the following five screening criteria to determine which technology options are suitable for further consideration in an energy conservation standards rulemaking:

(1) *Technological feasibility.* Technologies that are not incorporated in commercial products or in working prototypes will not be considered further.

(2) *Practicability to manufacture, install, and service.* If it is determined that mass production and reliable installation and servicing of a technology in commercial products could not be achieved on the scale necessary to serve the relevant market at the time of the projected compliance date of the standard, then that technology will not be considered further.

(3) *Impacts on product utility or product availability.* If it is determined that a technology would have a significant adverse impact on the utility of the product for significant subgroups of consumers or would result in the unavailability of any covered product type with performance characteristics (including reliability), features, sizes, capacities, and volumes that are substantially the same as products generally available in the United States at the time, it will not be considered further.

(4) *Adverse impacts on health or safety.* If it is determined that a technology would have significant adverse impacts on health or safety, it will not be considered further.

(5) *Unique-pathway proprietary technologies.* If a design option utilizes proprietary technology that represents a unique pathway to achieving a given efficiency level, that technology will not be considered further due to the potential for monopolistic concerns.

10 CFR part 430, subpart C, appendix A, sections 6(c)(3) and 7(b).

If DOE determines that a technology, or a combination of technologies, fails to meet one or more of the listed five criteria, it will be excluded from further consideration in the engineering analysis.

See chapter 4 of the preliminary TSD for further discussion of the screening analysis.

C. Engineering Analysis

The purpose of the engineering analysis is to establish the relationship between the efficiency and cost of MREFs. There are two elements to consider in the engineering analysis; the selection of efficiency levels to analyze (*i.e.,* the ''efficiency analysis'') and the determination of product cost at each efficiency level (*i.e.,* the ''cost analysis''). In determining the performance of higher-efficiency products, DOE considers technologies and design option combinations not eliminated by the screening analysis. For each product class, DOE estimates the manufacturer production cost (''MPC'') for the baseline as well as higher efficiency levels. The output of the engineering analysis is a set of cost-efficiency ''curves'' that are used in downstream analyses (*i.e.,* the LCC and PBP analyses and the NIA).

DOE converts the MPC to the manufacturer selling price (''MSP'') by applying a manufacturer markup. The MSP is the price the manufacturer charges its first customer, when selling into the product distribution channels. The manufacturer markup accounts for manufacturer non-production costs and profit margin. DOE developed the manufacturer markup by examining publicly available financial information for manufacturers of the covered product.

See Chapter 5 of the preliminary TSD for additional detail on the engineering analysis.

D. Markups Analysis

The markups analysis develops appropriate markups (*e.g.,* retailer markups, distributor markups, contractor markups) in the distribution chain and sales taxes to convert MSP estimates derived in the engineering analysis to consumer prices, which are then used in the LCC and PBP analysis. At each step in the distribution channel, companies mark up the price of the product to cover business costs and profit margin.

DOE develops baseline and incremental markups for each actor in the distribution chain (after the product leaves the manufacturer). Baseline markups are applied to the price of products with baseline efficiency, while incremental markups are applied to the difference in price between baseline and higher-efficiency models (the incremental cost increase). The

incremental markup is typically less than the baseline markup and is designed to maintain similar per-unit operating profit before and after new or amended standards.[4]

Chapter 6 of the preliminary TSD provides details on DOE's development of markups for MREFs. Chapter 12 of the preliminary TSD provides additional detail on the manufacturer markup.

E. Energy Use Analysis

The purpose of the energy use analysis is to determine the annual energy consumption of MREFs at different efficiencies in representative U.S. single-family homes, and multi-family residences, and to assess the energy savings potential of increased MREF efficiency. The energy use analysis estimates the range of energy use of MREFs in the field (*i.e.,* as they are actually used by consumers). The energy use analysis provides the basis for other analyses DOE performed, particularly assessments of the energy savings and the savings in consumer operating costs that could result from adoption of amended or new standards.

Chapter 7 of the preliminary TSD addresses the energy use analysis.

F. Life-Cycle Cost and Payback Period Analyses

The effect of new or amended energy conservation standards on individual consumers usually involves a reduction in operating cost and an increase in purchase cost. DOE used the following two metrics to measure consumer impacts:

- The LCC is the total consumer expense of an appliance or product over the life of that product, consisting of total installed cost (manufacturer selling price, distribution chain markups, sales tax, and installation costs) plus operating costs (expenses for energy use, maintenance, and repair). To compute the operating costs, DOE discounts future operating costs to the time of purchase and sums them over the lifetime of the product.
- The PBP is the estimated amount of time (in years) it takes consumers to recover the increased purchase cost (including installation) of a more-efficient product through lower operating costs. DOE calculates the PBP by dividing the change in purchase cost at higher efficiency levels by the change in annual operating cost for the year that amended or new standards are assumed to take effect.

Chapter 8 of the preliminary TSD addresses the LCC and PBP analyses.

G. National Impact Analysis

The NIA estimates the national energy savings (''NES'') and the net present value (''NPV'') of total consumer costs and savings expected to result from amended standards at specific efficiency levels (referred to as candidate standard levels).[5] DOE calculates the NES and NPV for the potential standard levels considered based on projections of annual product shipments, along with the annual energy consumption and total installed cost data from the energy use and LCC analyses. For the present analysis, DOE projected the energy savings, operating cost savings, product costs, and NPV of consumer benefits over the lifetime of MREFs sold from 2029 through 2058.

DOE evaluates the impacts of new or amended standards by comparing a case without such standards with standards-case projections (''no-new-standards case''). The no-new-standards case characterizes energy use and consumer costs for each product class in the absence of new or amended energy conservation standards. For this projection, DOE considers historical trends in efficiency and various forces that are likely to affect the mix of efficiencies over time. DOE compares the no-new-standards case with projections characterizing the market for each product class if DOE adopted new or amended standards at specific energy efficiency levels for that class. For each efficiency level, DOE considers how a given standard would likely affect the market shares of those products with efficiencies greater than the standard.

DOE uses a spreadsheet model to calculate the energy savings and the national consumer costs and savings from each efficiency level. Interested parties can review DOE's analyses by changing various input quantities within the spreadsheet. The NIA spreadsheet model uses typical values (as opposed to probability distributions) as inputs. Critical inputs to this analysis include shipments projections, estimated product lifetimes, product installed costs and operating costs, product annual energy consumption, the base case efficiency projection, and discount rates.

DOE estimates a combined total of 0.16 quads of site energy savings at the max-tech efficiency levels for MREFs. This represents 44.4 percent energy savings relative to the no-new-standards case energy consumption for MREFs.

Chapter 10 of the preliminary TSD addresses the NIA.

IV. Public Participation

DOE invites public participation in this process through participation in the webinar and submission of written comments and information. After the webinar and the closing of the comment period, DOE will consider all timely-submitted comments and additional information obtained from interested parties, as well as information obtained through further analyses. Following such consideration, the Department will publish either a determination that the standards for MREFs need not be amended or a NOPR proposing to amend those standards. The NOPR, should one be issued, would include proposed energy conservation standards for the products covered by that rulemaking, and members of the public would be given an opportunity to submit written and oral comments on the proposed standards.

A. Participation in the Webinar

The time and date for the webinar meeting are listed in the **DATES** section at the beginning of this document. Webinar registration information, participant instructions, and information about the capabilities available to webinar participants will be published on DOE's website: *www.energy.gov/eere/buildings/public-meetings-and-comment-deadlines.* Participants are responsible for ensuring their systems are compatible with the webinar software.

B. Procedure for Submitting Prepared General Statements for Distribution

Any person who has an interest in the topics addressed in this document, or who is representative of a group or class of persons that has an interest in these issues, may request an opportunity to make an oral presentation at the webinar. Such persons may submit such request to *ApplianceStandardsQuestions@ee.doe.gov.* Persons who wish to speak should include with their request a computer file in Microsoft Word, PDF, or text (ASCII) file format that briefly describes the nature of their interest in this rulemaking and the topics they wish to discuss. Such persons should also provide a daytime telephone number where they can be reached.

[4] Because the projected price of standards-compliant products is typically higher than the price of baseline products, using the same markup for the incremental cost and the baseline cost would result in higher per-unit operating profit. While such an outcome is possible, DOE maintains that in markets that are reasonably competitive it is unlikely that standards would lead to a sustainable increase in profitability in the long run.

[5] The NIA accounts for impacts in the 50 states and U.S. territories.

C. Conduct of the Webinar

DOE will designate a DOE official to preside at the webinar and may also use a professional facilitator to aid discussion. The webinar will not be a judicial or evidentiary-type public hearing, but DOE will conduct it in accordance with section 336 of EPCA (42 U.S.C. 6306). A court reporter will be present to record the proceedings and prepare a transcript. DOE reserves the right to schedule the order of presentations and to establish the procedures governing the conduct of the webinar. There shall not be discussion of proprietary information, costs or prices, market share, or other commercial matters regulated by U.S. anti-trust laws. After the webinar and until the end of the comment period, interested parties may submit further comments on the proceedings and any aspect of the rulemaking.

The webinar will be conducted in an informal, conference style. DOE will present summaries of comments received before the webinar, allow time for prepared general statements by participants, and encourage all interested parties to share their views on issues affecting this rulemaking. Each participant will be allowed to make a general statement (within time limits determined by DOE), before the discussion of specific topics. DOE will permit, as time permits, other participants to comment briefly on any general statements.

At the end of all prepared statements on a topic, DOE will permit participants to clarify their statements briefly. Participants should be prepared to answer questions by DOE and by other participants concerning these issues. DOE representatives may also ask questions of participants concerning other matters relevant to this rulemaking. The official conducting the webinar will accept additional comments or questions from those attending, as time permits. The presiding official will announce any further procedural rules or modification of the above procedures that may be needed for the proper conduct of the webinar.

A transcript of the webinar will be included in the docket, which can be viewed as described in the *Docket* section at the beginning of this document. In addition, any person may buy a copy of the transcript from the transcribing reporter.

D. Submission of Comments

DOE invites all interested parties, regardless of whether they participate in the public meeting, to submit in writing by March 22, 2022, comments and information on matters addressed in this notification and on other matters relevant to DOE's consideration of amended energy conservations standards for MREFs. Interested parties may submit comments, data, and other information using any of the methods described in the **ADDRESSES** section at the beginning of this document.

Submitting comments via www.regulations.gov. The *www.regulations.gov* web page will require you to provide your name and contact information. Your contact information will be viewable to DOE Building Technologies staff only. Your contact information will not be publicly viewable except for your first and last names, organization name (if any), and submitter representative name (if any). If your comment is not processed properly because of technical difficulties, DOE will use this information to contact you. If DOE cannot read your comment due to technical difficulties and cannot contact you for clarification, DOE may not be able to consider your comment.

However, your contact information will be publicly viewable if you include it in the comment itself or in any documents attached to your comment. Any information that you do not want to be publicly viewable should not be included in your comment, nor in any document attached to your comment. If this instruction is followed, persons viewing comments will see only first and last names, organization names, correspondence containing comments, and any documents submitted with the comments.

Do not submit to *www.regulations.gov* information for which disclosure is restricted by statute, such as trade secrets and commercial or financial information (hereinafter referred to as Confidential Business Information (CBI)). Comments submitted through *www.regulations.gov* cannot be claimed as CBI. Comments received through the website will waive any CBI claims for the information submitted. For information on submitting CBI, see the Confidential Business Information section.

DOE processes submissions made through *www.regulations.gov* before posting. Normally, comments will be posted within a few days of being submitted. However, if large volumes of comments are being processed simultaneously, your comment may not be viewable for up to several weeks. Please keep the comment tracking number that *www.regulations.gov* provides after you have successfully uploaded your comment.

Submitting comments via email. Comments and documents submitted via email also will be posted to *www.regulations.gov.* If you do not want your personal contact information to be publicly viewable, do not include it in your comment or any accompanying documents. Instead, provide your contact information in a cover letter. Include your first and last names, email address, telephone number, and optional mailing address. The cover letter will not be publicly viewable as long as it does not include any comments.

Include contact information each time you submit comments, data, documents, and other information to DOE. No faxes will be accepted.

Comments, data, and other information submitted to DOE electronically should be provided in PDF (preferred), Microsoft Word or Excel, or text (ASCII) file format. Provide documents that are not secured, that are written in English, and that are free of any defects or viruses. Documents should not contain special characters or any form of encryption and, if possible, they should carry the electronic signature of the author.

Campaign form letters. Please submit campaign form letters by the originating organization in batches of between 50 to 500 form letters per PDF or as one form letter with a list of supporters' names compiled into one or more PDFs. This reduces comment processing and posting time.

Confidential Business Information. Pursuant to 10 CFR 1004.11, any person submitting information that he or she believes to be confidential and exempt by law from public disclosure should submit via email two well-marked copies: One copy of the document marked ''confidential'' including all the information believed to be confidential, and one copy of the document marked ''non-confidential'' with the information believed to be confidential deleted. DOE will make its own determination about the confidential status of the information and treat it according to its determination.

It is DOE's policy that all comments may be included in the public docket, without change and as received, including any personal information provided in the comments (except information deemed to be exempt from public disclosure).

V. Approval of the Office of the Secretary

The Secretary of Energy has approved publication of this notification of a webinar and availability of preliminary technical support document.

Signing Authority

This document of the Department of Energy was signed on January 12, 2022, by Kelly J. Speakes-Backman, Principal Deputy Assistant Secretary for Energy Efficiency and Renewable Energy, pursuant to delegated authority from the Secretary of Energy. That document with the original signature and date is maintained by DOE. For administrative purposes only, and in compliance with requirements of the Office of the Federal Register, the undersigned DOE Federal Register Liaison Officer has been authorized to sign and submit the document in electronic format for publication, as an official document of the Department of Energy. This administrative process in no way alters the legal effect of this document upon publication in the **Federal Register**.

Signed in Washington, DC, on January 12, 2022.

Treena V. Garrett,

Federal Register Liaison Officer, U.S. Department of Energy.

[FR Doc. 2022–00848 Filed 1–20–22; 8:45 am]

BILLING CODE 6450–01–P

DEPARTMENT OF TRANSPORTATION

Federal Aviation Administration

14 CFR Part 39

[Docket No. FAA–2020–1003; Project Identifier MCAI–2020–00962–A]

RIN 2120–AA64

Airworthiness Directives; Viking Air Limited (Type Certificate Previously Held by Bombardier Inc. and de Havilland, Inc.) Airplanes

AGENCY: Federal Aviation Administration (FAA), DOT.

ACTION: Notice of proposed rulemaking (NPRM).

SUMMARY: The FAA proposes to adopt a new airworthiness directive (AD) for all Viking Air Limited (Viking) (type certificate previously held by Bombardier Inc. and de Havilland, Inc.) Model DHC–6–1, DHC–6–100, DHC–6–200, DHC–6–300, and DHC–6–400 airplanes. This proposed AD results from mandatory continuing airworthiness information (MCAI) originated by an aviation authority of another country to identify and correct an unsafe condition on an aviation product. The MCAI identifies the unsafe condition as cracks and corrosion damage to the aileron internal structure. This proposed AD would require visually inspecting the entire aileron internal structure, correcting any damage found, and reporting the inspection results to Viking. The FAA is proposing this AD to address the unsafe condition on these products.

DATES: The FAA must receive comments on this proposed AD by March 7, 2022.

ADDRESSES: You may send comments, using the procedures found in 14 CFR 11.43 and 11.45, by any of the following methods:

- *Federal eRulemaking Portal:* Go to *https://www.regulations.gov.* Follow the instructions for submitting comments.
- *Fax:* (202) 493–2251.
- *Mail:* U.S. Department of Transportation, Docket Operations, M–30, West Building Ground Floor, Room W12 140, 1200 New Jersey Avenue SE, Washington, DC 20590.
- *Hand Delivery:* Deliver to Mail address above between 9 a.m. and 5 p.m., Monday through Friday, except Federal holidays.

For service information identified in this NPRM, contact Viking Air Ltd., 1959 de Havilland Way, Sidney British Columbia, Canada V8L 5V5; phone: (800) 663–8444; email: *continuing.airworthiness@vikingair.com;* website: *https://www.vikingair.com.* You may view this service information at the FAA, Airworthiness Products Section, Operational Safety Branch, 901 Locust, Kansas City, MO 64106. For information on the availability of this material at the FAA, call (817) 222–5110.

Examining the AD Docket

You may examine the AD docket at *https://www.regulations.gov* by searching for and locating Docket No. FAA–2020–1003; or in person at Docket Operations between 9 a.m. and 5 p.m., Monday through Friday, except Federal holidays. The AD docket contains this NPRM, the MCAI, any comments received, and other information. The street address for Docket Operations is listed above.

FOR FURTHER INFORMATION CONTACT: Deep Gaurav, Aviation Safety Engineer, New York ACO Branch, FAA, 1515 Stewart Avenue, Westbury, NY 11590; phone: (516) 228–7300; fax: (516) 794–5331; email: *deep.gaurav@faa.gov.*

SUPPLEMENTARY INFORMATION:

Comments Invited

The FAA invites you to send any written relevant data, views, or arguments about this proposal. Send your comments to an address listed under **ADDRESSES**. Include ''Docket No. FAA–2020–1003; Project Identifier MCAI–2020–00962–A'' at the beginning of your comments. The most helpful comments reference a specific portion of the proposal, explain the reason for any recommended change, and include supporting data. The FAA will consider all comments received by the closing date and may amend this proposal because of those comments.

Except for Confidential Business Information (CBI) as described in the following paragraph, and other information as described in 14 CFR 11.35, the FAA will post all comments received, without change, to *https://www.regulations.gov,* including any personal information you provide. The agency will also post a report summarizing each substantive verbal contact received about this NPRM.

Confidential Business Information

CBI is commercial or financial information that is both customarily and actually treated as private by its owner. Under the Freedom of Information Act (FOIA) (5 U.S.C. 552), CBI is exempt from public disclosure. If your comments responsive to this NPRM contain commercial or financial information that is customarily treated as private, that you actually treat as private, and that is relevant or responsive to this NPRM, it is important that you clearly designate the submitted comments as CBI. Please mark each page of your submission containing CBI as ''PROPIN.'' The FAA will treat such marked submissions as confidential under the FOIA, and they will not be placed in the public docket of this NPRM. Submissions containing CBI should be sent to Deep Gaurav, Aviation Safety Engineer, New York ACO Branch, FAA, 1515 Stewart Avenue, Westbury, NY 11590. Any commentary that the FAA receives which is not specifically designated as CBI will be placed in the public docket for this rulemaking.

Background

Transport Canada, which is the aviation authority for Canada, has issued Transport Canada AD CF–2020–05, dated March 13, 2020 (referred to after this as ''the MCAI''), to address the unsafe condition on Viking Model DHC–6 series 1, DHC–6 series 100, DHC–6 series 110, DHC–6 series 200, DHC–6 series 210, DHC–6 series 300, DHC–6 series 310, DHC–6 series 320, and DHC–6 series 400 airplanes. The MCAI states:

> Viking Air Ltd. (Viking) received reports of cracks and corrosion damage to the aileron internal structure. During a repair of an in-service aeroplane, an aileron hinge support rib was found cracked at the lower flange along the bend radius near the hinge fitting attachment at wing station 247.29. Preliminary investigation by Viking

determined that the observed crack was the result of fatigue. During an inspection of another in-service aeroplane, the aileron inboard rib and the vertical flange of the inboard aileron forward spar near a fastener hole were also found cracked.

The current inspection requirements of the affected aeroplanes do not include a direct inspection of the aileron internal structure. Cracks or other damage to the aileron ribs or to the aileron spar flanges are not detectable from the aileron exterior surfaces. Undetected cracks or other damage to the aileron internal structure could lead to progressive looseness of the aileron at the hinge support rib push-pull rod attachment and subsequent flutter condition and degraded or loss of aileron control.

To detect and correct any cracking or other damage to the aileron internal structure, this [Transport Canada] AD mandates a one-time Special Detailed Inspection (SDI) of all aileron internal structure, including front and rear spars, all aileron ribs and upper and lower skins for cracks, corrosion or other damage, and rectification, as required, of the damaged parts.

This [Transport Canada] AD also mandates reporting of all inspection results to Viking. The reporting of the inspection results is necessary to assess the overall aileron internal structural condition on in-service aeroplanes and to determine additional corrective action based on the results of the inspections.

Viking has published Service Bulletin (SB) V6/0066 Revision A, dated 9 December 2019, (referred to as ''the SB'' in this AD) providing accomplishment instructions for the inspection, rectification of the damaged parts, and reporting requirements.

You may examine the MCAI in the AD docket at *https://www.regulations.gov* by searching for and locating Docket No. FAA–2020–1003.

Related Service Information Under 1 CFR Part 51

The FAA reviewed Viking DHC–6 Twin Otter Service Bulletin V6/0066, Revision A, dated December 9, 2019. The service information specifies procedures for visually inspecting the entire aileron internal structure, including front and rear spars, all aileron ribs, and upper and lower skins; repairing or replacing any damaged part; and reporting inspection results to Viking Air Limited technical support. This service information is reasonably available because the interested parties have access to it through their normal course of business or by the means identified in the **ADDRESSES** section.

Other Related Service Information

The FAA reviewed Viking DHC–6 Twin Otter Service Bulletin V6/0066, Revision NC, dated August 29, 2019. The service information specifies procedures for visually inspecting the aileron ribs, including ribs and both sides of the hinge arm; repairing or replacing any damaged part; and reporting inspection results to Viking Air Limited technical support.

FAA's Determination

This product has been approved by the aviation authority of another country, and is approved for operation in the United States. Pursuant to the FAA's bilateral agreement with this State of Design Authority, it has notified the FAA of the unsafe condition described in the MCAI and service information referenced above. The FAA is issuing this NPRM after determining the unsafe condition described previously is likely to exist or develop in other products of the same type design.

Proposed AD Requirements in This NPRM

This proposed AD would require accomplishing the actions specified in the service information described previously.

Interim Action

The FAA considers that this proposed AD would be an interim action. The inspection reports will provide the FAA and Viking Air Limited additional data for determining the damage present in the fleet. After analyzing the data, the FAA may take further rulemaking action.

Differences Between This Proposed AD and the MCAI

The MCAI applies to Viking Air Limited Model DHC–6 series 110, DHC–6 series 210, DHC–6 series 310, and DHC–6 series 320, and this proposed AD would not because these models do not have an FAA type certificate. Transport Canada Model DHC–6 series 1, DHC–6 series 100, DHC–6 series 200, DHC–6 series 300, and DHC–6 series 400 airplanes correspond to FAA Model DHC–6–1, DHC–6–100, DHC–6–200, DHC–6–300, and DHC–6–400 airplanes, respectively.

Costs of Compliance

The FAA estimates that this AD, if adopted as proposed, would affect 33 airplanes of U.S. registry. The FAA also estimates that it would take about 3 work-hours per airplane to comply with the inspection and 1 hour to comply with the reporting requirement of this proposed AD. The average labor rate is $85 per work-hour.

Based on these figures, the FAA estimates the cost of the proposed AD on U.S. operators would be $11,220 or $340 per airplane.

In addition, the FAA estimates that any necessary follow-on actions to replace an aileron would take 6 work-hours and require parts costing $52,243, for a cost of $52,753 per airplane. The FAA has no way of determining the number of airplanes that may need these actions.

Paperwork Reduction Act

A federal agency may not conduct or sponsor, and a person is not required to respond to, nor shall a person be subject to a penalty for failure to comply with a collection of information subject to the requirements of the Paperwork Reduction Act unless that collection of information displays a currently valid OMB Control Number. The OMB Control Number for this information collection is 2120–0056. Public reporting for this collection of information is estimated to take approximately 1 hour per response, including the time for reviewing instructions, searching existing data sources, gathering and maintaining the data needed, and completing and reviewing the collection of information. All responses to this collection of information are mandatory. Send comments regarding this burden estimate or any other aspect of this collection of information, including suggestions for reducing this burden to: Information Collection Clearance Officer, Federal Aviation Administration, 10101 Hillwood Parkway, Fort Worth, TX 76177–1524.

Authority for This Rulemaking

Title 49 of the United States Code specifies the FAA's authority to issue rules on aviation safety. Subtitle I, section 106, describes the authority of the FAA Administrator. Subtitle VII: Aviation Programs describes in more detail the scope of the Agency's authority.

The FAA is issuing this rulemaking under the authority described in Subtitle VII, Part A, Subpart III, Section 44701: General requirements. Under that section, Congress charges the FAA with promoting safe flight of civil aircraft in air commerce by prescribing regulations for practices, methods, and procedures the Administrator finds necessary for safety in air commerce. This regulation is within the scope of that authority because it addresses an unsafe condition that is likely to exist or develop on products identified in this rulemaking action.

Regulatory Findings

The FAA determined that this proposed AD would not have federalism implications under Executive Order

13132. This proposed AD would not have a substantial direct effect on the States, on the relationship between the national Government and the States, or on the distribution of power and responsibilities among the various levels of government.

For the reasons discussed above, I certify this proposed regulation:

(1) Is not a ''significant regulatory action'' under Executive Order 12866,

(2) Will not affect intrastate aviation in Alaska, and

(3) Will not have a significant economic impact, positive or negative, on a substantial number of small entities under the criteria of the Regulatory Flexibility Act.

List of Subjects in 14 CFR Part 39

Air transportation, Aircraft, Aviation safety, Incorporation by reference, Safety.

The Proposed Amendment

Accordingly, under the authority delegated to me by the Administrator, the FAA proposes to amend 14 CFR part 39 as follows:

PART 39—AIRWORTHINESS DIRECTIVES

■ 1. The authority citation for part 39 continues to read as follows:

Authority: 49 U.S.C. 106(g), 40113, 44701.

§ 39.13 [Amended]

■ 2. The FAA amends § 39.13 by adding the following new airworthiness directive:

Viking Air Limited (Type Certificate Previously Held by Bombardier Inc. and de Havilland, Inc.): Docket No. FAA–2020–1003; Project Identifier MCAI–2020–00962–A.

(a) Comments Due Date

The FAA must receive comments on this airworthiness directive (AD) by March 7, 2022.

(b) Affected ADs

None.

(c) Applicability

This AD applies to Viking Air Limited (type certificate previously held by Bombardier Inc. and de Havilland, Inc.) Model DHC–6–1, DHC–6–100, DHC–6–200, DHC–6–300, and DHC–6–400 airplanes, all serial numbers, certificated in any category.

(d) Subject

Joint Aircraft System Component (JASC) Code 5700, Wing Structure.

(e) Unsafe Condition

This AD was prompted by mandatory continuing airworthiness information (MCAI) originated by an aviation authority of another country to identify and correct an unsafe condition on an aviation product. The MCAI identifies the unsafe condition as cracks and corrosion damage to the aileron internal structure. The FAA is issuing this AD to detect and correct cracks and other damage to the aileron internal structure. The unsafe condition, if not addressed, could result in progressive looseness of the aileron at the hinge support rib push-pull rod attachment, flutter condition, and degraded or loss of aileron control, which could lead to loss of control of the airplane.

(f) Compliance

Comply with this AD within the compliance times specified, unless already done.

(g) Inspection and Replacement of the Aileron

At the compliance time specified in paragraph (g)(1) or (2) of this AD, inspect the left-hand (LH) and right-hand (RH) aileron internal structures for cracks, corrosion, and other damage and take any necessary corrective actions in accordance with the Accomplishment Instructions, steps II.A. through II.A.3. of Viking DHC–6 Twin Otter Service Bulletin V6/0066, Revision A, dated December 9, 2019 (Viking SB V6/0066, Revision A).

(1) For each LH or RH aileron that has accumulated 16,000 or more hours time-in-service (TIS), 32,000 or more flight cycles (FC), or 10 or more years since first installation on an airplane, whichever occurs first: Within 6 months after the effective date of this AD.

(2) For each LH or RH aileron that has accumulated less than 16,000 hours TIS, less than 32,000 FC, and less than 10 years since first installation on an airplane: Within 6 months after accumulating 16,000 hours TIS, 32,000 FC, or 10 years, whichever occurs first.

(h) Reporting Requirement

Within 30 days after the inspection required by paragraph (g)(1) or (2) of this AD or within 30 days after the effective date of this AD, whichever occurs later, report to Viking the information requested on the Inspection Reply Form, page 7, of Viking SB V6/0066, Revision A.

(i) Credit for Previous Actions

You may take credit for the actions required by paragraphs (g)(1) and (2) of this AD if you performed those actions before the effective date of this AD using Viking DHC–6 Twin Otter Service Bulletin V6/0066, Revision NC, dated August 29, 2019.

(j) Alternative Methods of Compliance (AMOCs)

(1) The Manager, New York ACO Branch, FAA, has the authority to approve AMOCs for this AD, if requested using the procedures found in 14 CFR 39.19. In accordance with 14 CFR 39.19, send your request to your principal inspector or local Flight Standards District Office, as appropriate. If sending information directly to the manager of the certification office, send it to the attention of the person identified in paragraph (k)(1) of this AD.

(2) Before using any approved AMOC, notify your appropriate principal inspector, or lacking a principal inspector, the manager of the local flight standards district office/certificate holding district office.

(k) Related Information

(1) For more information about this AD, contact Deep Gaurav, Aviation Safety Engineer, New York ACO Branch, FAA, 1515 Stewart Avenue, Westbury, NY 11590; phone: (516) 228–7300; fax: (516) 794–5331; email: *deep.gaurav@faa.gov.*

(2) Refer to Transport Canada AD CF–2020–05, dated March 13, 2020, for more information. You may examine the Transport Canada AD in the AD docket at *https://www.regulations.gov* by searching for and locating Docket No. FAA–2020–1003.

(3) For service information identified in this AD, contact Viking Air Ltd., 1959 de Havilland Way, Sidney British Columbia, Canada V8L 5V5; phone: (800) 663–8444; email: *continuing.airworthiness@vikingair.com;* website: *https://www.vikingair.com.* You may review this referenced service information at the FAA, Airworthiness Products Section, Operational Safety Branch, 901 Locust, Kansas City, MO 64106. For information on the availability of this material at the FAA, call (817) 222–5110.

Issued on January 13, 2022.

Lance T. Gant,

Director, Compliance & Airworthiness Division, Aircraft Certification Service.

[FR Doc. 2022–00994 Filed 1–20–22; 8:45 am]

BILLING CODE 4910–13–P

DEPARTMENT OF TRANSPORTATION

Federal Aviation Administration

14 CFR Part 39

[Docket No. FAA–2022–0007; Project Identifier 2018–CE–048–AD]

RIN 2120–AA64

Airworthiness Directives; Viking Air Limited (Type Certificate Previously Held by Bombardier Inc. and de Havilland, Inc.) Airplanes

AGENCY: Federal Aviation Administration (FAA), DOT.

ACTION: Notice of proposed rulemaking (NPRM).

SUMMARY: The FAA proposes to adopt a new airworthiness directive (AD) for certain Viking Air Limited (type certificate previously held by Bombardier Inc. and de Havilland, Inc.) Model DHC–6–400 airplanes. This proposed AD results from mandatory continuing airworthiness information (MCAI) originated by an aviation authority of another country to identify and correct an unsafe condition on an aviation product. The MCAI describes the unsafe condition as corrosion of the

fuel system components located in the fuel gallery due to inadequate corrosion protection. The FAA is proposing this AD to address the unsafe condition on these products.

DATES: The FAA must receive comments on this proposed AD by March 7, 2022.

ADDRESSES: You may send comments, using the procedures found in 14 CFR 11.43 and 11.45, by any of the following methods:

- *Federal eRulemaking Portal:* Go to *https://www.regulations.gov.* Follow the instructions for submitting comments.
- *Fax:* (202) 493–2251.
- *Mail:* U.S. Department of Transportation, Docket Operations, M–30, West Building Ground Floor, Room W12–140, 1200 New Jersey Avenue SE, Washington, DC 20590.
- *Hand Delivery:* Deliver to Mail address above between 9 a.m. and 5 p.m., Monday through Friday, except Federal holidays.

For service information identified in this proposed AD, contact Viking Air Limited Technical Support, 1959 de Havilland Way, Sidney, British Columbia, Canada, V8L 5V5; phone: (North America) (800) 663–8444; fax: (250) 656–0673; email: *technical.support@vikingair.com;* website: *https://www.vikingair.com/support/service-bulletins.* You may view this service information at the FAA, Airworthiness Products Section, Operational Safety Branch, 901 Locust, Kansas City, MO 64106. For information on the availability of this material at the FAA, call (817) 222–5110.

Examining the AD Docket

You may examine the AD docket at *https://www.regulations.gov* by searching for and locating Docket No. FAA–2022–0007; or in person at the Docket Operations between 9 a.m. and 5 p.m., Monday through Friday, except Federal holidays. The AD docket contains this NPRM, the MCAI, any comments received, and other information. The street address for Docket Operations is listed above.

FOR FURTHER INFORMATION CONTACT: Joseph Catanzaro, Aviation Safety Engineer, FAA, New York ACO Branch, 1600 Stewart Avenue, Suite 410, Westbury, NY 11590; phone: (516) 228–7366; fax: (516) 794–5531; email: *joseph.catanzaro@faa.gov.*

SUPPLEMENTARY INFORMATION:

Comments Invited

The FAA invites you to send any written relevant data, views, or arguments about this proposed AD. Send your comments to an address listed under the **ADDRESSES** section. Include ''Docket No. FAA–2022–0007; Project Identifier 2018–CE–048–AD'' at the beginning of your comments. The most helpful comments reference a specific portion of the proposal, explain the reason for any recommended change, and include supporting data. The FAA will consider all comments received by the closing date and may amend this proposal because of those comments.

Except for Confidential Business Information (CBI) as described in the following paragraph, and other information as described in 14 CFR 11.35, the FAA will post all comments received, without change, to *https://www.regulations.gov,* including any personal information you provide. The agency will also post a report summarizing each substantive verbal contact received about this NPRM.

Confidential Business Information

CBI is commercial or financial information that is both customarily and actually treated as private by its owner. Under the Freedom of Information Act (FOIA) (5 U.S.C. 552), CBI is exempt from public disclosure. If your comments responsive to this NPRM contain commercial or financial information that is customarily treated as private, that you actually treat as private, and that is relevant or responsive to this NPRM, it is important that you clearly designate the submitted comments as CBI. Please mark each page of your submission containing CBI as ''PROPIN.'' The FAA will treat such marked submissions as confidential under the FOIA, and they will not be placed in the public docket of this NPRM. Submissions containing CBI should be sent to Joseph Catanzaro, Aviation Safety Engineer, FAA, New York ACO Branch, 1600 Stewart Avenue, Suite 410, Westbury, NY 11590. Any commentary that the FAA receives which is not specifically designated as CBI will be placed in the public docket for this rulemaking.

Background

Transport Canada, which is the aviation authority for Canada, has issued Canadian AD CF–2018–07, dated February 23, 2018 (referred to after this as ''the MCAI''), to correct an unsafe condition on certain serial-numbered Viking Air Limited Model DHC–6–400 airplanes. The MCAI states:

> There have been reports of corrosion affecting components of the fuel system that are located in the fuel gallery because of inadequate corrosion protection. This condition affects only aeroplanes operating on floats.
>
> The effects of corrosion-related damage to fuel system components have included fuel leaks, electrical arcing, loss of fuel boost pump function and erroneous fuel quantity readings. Inaccurate fuel quantity indication and loss of fuel boost pump function can lead to fuel starvation followed by loss of engine power. Electrical arcing in the fuel gallery and loss of electrical bonding between fuel system components increases the risk of fire.

The MCAI requires repetitively inspecting the fuel gallery for corrosion, rectifying any deficiencies, and accomplishing modifications to the fuel gallery system. You may examine the MCAI in the AD docket at *https://www.regulations.gov* by searching for and locating Docket No. FAA–2022–0007.

FAA's Determination and Requirements of the Proposed AD

This product has been approved by the aviation authority of another country, and is approved for operation in the United States. Pursuant to the FAA's bilateral agreement with this State of Design Authority, it has notified the FAA of the unsafe condition described in the MCAI referenced above. The FAA is issuing this NPRM after determining the unsafe condition described previously is likely to exist or develop on other products of the same type design.

Related Service Information Under 1 CFR Part 51

The FAA reviewed Viking DHC–6 Twin Otter Service Bulletin V6/0044, Revision 'B', dated September 13, 2021. The service information specifies incorporating multiple design improvement modifications in the fuel gallery.

The FAA also reviewed Temporary Revision No. 241, dated July 27, 2021, to the Viking DHC–6 Inspection Requirements Manual, PSM 1–6–7. Items 15.(1) and 15.(2) of this service information specifies rinsing and inspecting the entire fuel gallery for corrosion; removing corrosion; reapplying any protective finishes; and removing and replacing any damaged components. The temporary revision updates the fuel gallery inspection to include airplanes with a new fuel probe (Modification (MOD) 6/2395).

This service information is reasonably available because the interested parties have access to it through their normal course of business or by the means identified in the **ADDRESSES** section.

Other Related Service Information

The FAA reviewed the following technical bulletins related to this NPRM, which contain instructions for

the different modifications to components in the fuel gallery:

- Viking DHC–6 Twin Otter Technical Bulletin TBV6/00034, Revision NC, dated October 16, 2013 (MOD 6/2267);
- Viking DHC–6 Twin Otter Technical Bulletin TBV6/00084, Revision A, dated May 26, 2017 (MOD 6/2299);
- Viking DHC–6 Twin Otter Technical Bulletin V6/00099, Revision NC, dated December 23, 2016 (MOD 6/2389);
- Viking DHC–6 Twin Otter Technical Bulletin. TBV6/00094, Revision NC, dated November 1, 2016 (MOD 6/2390);
- Viking DHC–6 Twin Otter Technical Bulletin. V6/00100, Revision NC, dated February 20, 2017 (MOD 6/2393); and
- Viking DHC–6 Twin Otter Technical Bulletin V6/00152, Revision NC, dated January 29, 2021 (MOD 6/2464).

Proposed AD Requirements in This NPRM

This proposed AD would require accomplishing the actions described in the service information previously.

Costs of Compliance

The FAA estimates that this AD, if adopted as proposed, would affect 4 airplanes of U.S. registry. The average labor rate is $85 per work-hour.

The FAA estimates the following costs to comply with this AD:

ESTIMATED COSTS

Action	Labor cost	Parts cost	Cost per airplane	Cost on U.S. operators
Inspect fuel gallery	3 work-hours × $85 per hour = $255.	Not applicable	$255 per inspection cycle	$1,020 per inspection cycle.
MOD 6/2267—Fuel boost pump EMI filter relocation.	16 work-hours × $85 per hour = $1,360.	$4,762	$6,122	$12,244 (for 2 affected airplanes).
MOD 6/2299—Improved fuel boost pump.	17 work-hours × $85 per hour = $1,445.	$42,290	$43,735	$131,205 (for 3 affected airplanes)
MOD 6/2389—Electrical Bonding Fuel System Manifold Drain Valve.	18 work-hours × $85 per hour = $1,530.	$572	$2,102	$8,408 (for 4 affected airplanes).
MOD 6/2390—Fuel probe, improved mating electrical connection.	20 work-hours × $85 per hour = $1,700.	$2,129	$3,829	$11,487 (for 3 affected airplanes).
MOD 6/2393—Fuel system manifold—drain valve.	8 work-hours × $85 per hour = $680.	$225	$905	$3,620 (for 4 affected airplanes).
MOD 6/2464—Fuel pressure switch replacement.	10 work-hours × $85 per hour = $850.	$3,953	$4,803	$14,409 (for 3 affected airplanes).

On-Condition Costs

The extent of corrosion damage found during the inspections may vary significantly from airplane to airplane. The FAA has no way of determining how much corrosion damage may be found on each airplane, the cost for repairing corrosion damage on each airplane, or the number of airplanes that may require repair.

Authority for This Rulemaking

Title 49 of the United States Code specifies the FAA's authority to issue rules on aviation safety. Subtitle I, section 106, describes the authority of the FAA Administrator. Subtitle VII: Aviation Programs, describes in more detail the scope of the Agency's authority.

The FAA is issuing this rulemaking under the authority described in Subtitle VII, Part A, Subpart III, Section 44701: General requirements. Under that section, Congress charges the FAA with promoting safe flight of civil aircraft in air commerce by prescribing regulations for practices, methods, and procedures the Administrator finds necessary for safety in air commerce. This regulation is within the scope of that authority because it addresses an unsafe condition that is likely to exist or develop on products identified in this rulemaking action.

Regulatory Findings

The FAA determined that this proposed AD would not have federalism implications under Executive Order 13132. This proposed AD would not have a substantial direct effect on the States, on the relationship between the national government and the States, or on the distribution of power and responsibilities among the various levels of government.

For the reasons discussed above, I certify this proposed regulation:

(1) Is not a ''significant regulatory action'' under Executive Order 12866,

(2) Would not affect intrastate aviation in Alaska, and

(3) Would not have a significant economic impact, positive or negative, on a substantial number of small entities under the criteria of the Regulatory Flexibility Act.

List of Subjects in 14 CFR Part 39

Air transportation, Aircraft, Aviation safety, Incorporation by reference, Safety.

The Proposed Amendment

Accordingly, under the authority delegated to me by the Administrator, the FAA proposes to amend 14 CFR part 39 as follows:

PART 39—AIRWORTHINESS DIRECTIVES

■ 1. The authority citation for part 39 continues to read as follows:

Authority: 49 U.S.C. 106(g), 40113, 44701.

§ 39.13 [Amended]

■ 2. The FAA amends § 39.13 by adding the following new airworthiness directive:

Viking Air Limited (type certificate previously held by Bombardier Inc. and de Havilland, Inc.): Docket No. FAA–2022–0007; Project Identifier 2018–CE–048–AD.

(a) Comments Due Date

The FAA must receive comments on this airworthiness directive (AD) by March 7, 2022.

(b) Affected ADs

None.

(c) Applicability

This AD applies to Viking Air Limited (type certificate previously held by Bombardier Inc. and de Havilland, Inc.) Model DHC–6–400 airplanes, serial numbers 845 through 957, certificated in any category.

(d) Subject

Joint Aircraft System Component (JASC) Code 2800, Aircraft Fuel System.

(e) Reason

This AD was prompted by mandatory continuing airworthiness information (MCAI) originated by an aviation authority of another country to identify and correct an unsafe condition on an aviation product. The MCAI describes the unsafe condition as corrosion of fuel system components located in the fuel gallery due to inadequate corrosion protection. The FAA is issuing this AD to prevent corrosion-related damage to fuel system components, which could lead to fuel leaks, electrical arcing, loss of fuel boost pump function, and erroneous fuel quantity readings. This unsafe condition, if not corrected, could result in fuel starvation with loss of engine power and increased risk of an in-flight fire with consequent loss of airplane control.

(f) Compliance

Comply with this AD within the compliance times specified, unless already done.

(g) Required Actions for Airplanes Operating on Floats on the Effective Date of This AD

(1) Within 50 hours time-in-service (TIS) after the effective date of this AD or within 3 months after the effective date of this AD, whichever occurs first, and thereafter at intervals not to exceed 125 hours TIS, do the following actions:

(i) Remove all fuel gallery covers and rinse the fuel gallery with water.

(ii) Inspect the fuel gallery for corrosion and, if there is any corrosion, take all necessary corrective actions before further flight by following Item D.15(2) of Special Inspection 3 in Temporary Revision No. 241, dated July 27, 2021, to the Viking DHC–6 Inspection Requirements Manual, PSM 1–6–7.

(2) Within 12 months after the effective date of this AD, install the modifications applicable to your airplane serial number by following the Accomplishment Instructions, sections A. through E. in Viking Air Limited, DHC–6 Twin Otter Service Bulletin V6/0044, Revision 'B', dated September 13, 2021 (Viking SB V6/0044, Revision 'B').

(h) Required Actions for Airplanes Modified To Operate on Floats After the Effective Date of This AD

Within 12 months after the airplane is modified to operate on floats, regardless of whether the landing gear is later modified back to non-float landing gear, install the modifications applicable to your airplane serial number by following the Accomplishment Instructions, sections A. through E. in Viking SB V6/0044, Revision 'B.'

(i) Alternative Methods of Compliance (AMOCs)

(1) The Manager, New York ACO Branch, FAA, has the authority to approve AMOCs for this AD, if requested using the procedures found in 14 CFR 39.19. In accordance with 14 CFR 39.19, send your request to your principal inspector or local Flight Standards District Office, as appropriate. If sending information directly to the manager of the certification office, send it to the attention of the person identified in paragraph (j)(1) of this AD.

(2) Before using any approved AMOC, notify your appropriate principal inspector, or lacking a principal inspector, the manager of the local flight standards district office/certificate holding district office.

(j) Related Information

(1) For more information about this AD, contact Joseph Catanzaro, Aviation Safety Engineer, FAA, New York ACO Branch, 1600 Stewart Avenue, Suite 410, Westbury, NY 11590; phone: (516) 228–7366; fax: (516) 794–5531; email: *joseph.catanzaro@faa.gov.*

(2) For service information identified in this AD, contact Viking Air Limited Technical Support, 1959 de Havilland Way, Sidney, British Columbia, Canada, V8L 5V5; phone: (North America) (800) 663–8444; fax: (250) 656–0673; email: *technical.support@vikingair.com;* website: *https://www.vikingair.com/support/service-bulletins.* You may view this referenced service information at the FAA, Airworthiness Products Section, Operational Safety Branch, 901 Locust, Kansas City, MO 64106. For information on the availability of this material at the FAA, call (817) 222–5110.

Issued on January 13, 2022.

Lance T. Gant,

Director, Compliance & Airworthiness Division, Aircraft Certification Service.

[FR Doc. 2022–00970 Filed 1–20–22; 8:45 am]

BILLING CODE 4910–13–P

DEPARTMENT OF TRANSPORTATION

Federal Aviation Administration

14 CFR Part 39

[Docket No. FAA–2022–0008; Project Identifier MCAI–2021–00882–R]

RIN 2120–AA64

Airworthiness Directives; Leonardo S.p.a. Helicopters

AGENCY: Federal Aviation Administration (FAA), DOT.

ACTION: Notice of proposed rulemaking (NPRM).

SUMMARY: The FAA proposes to adopt a new airworthiness directive (AD) for all Leonardo S.p.a. Model AW109SP helicopters. This proposed AD was prompted by reports of corrosion inside the hoist support assembly (boom assembly) (affected part) that affects both the huck bolt heads (blind bolt fasteners) and the support surface. This proposed AD would require repetitive inspections of the external and internal surfaces of each affected part for cracking and corrosion and, depending on the findings, accomplishment of corrective actions, as specified in a European Union Aviation Safety Agency (EASA) AD, which is proposed for incorporation by reference (IBR). This proposed AD would also allow the installation of an affected part, provided certain instructions are followed. The FAA is proposing this AD to address the unsafe condition on these products.

DATES: The FAA must receive comments on this proposed AD by March 7, 2022.

ADDRESSES: You may send comments, using the procedures found in 14 CFR 11.43 and 11.45, by any of the following methods:

- *Federal eRulemaking Portal:* Go to *https://www.regulations.gov.* Follow the instructions for submitting comments.
- *Fax:* (202) 493–2251.
- *Mail:* U.S. Department of Transportation, Docket Operations, M–30, West Building Ground Floor, Room W12–140, 1200 New Jersey Avenue SE, Washington, DC 20590.
- *Hand Delivery:* Deliver to Mail address above between 9 a.m. and 5 p.m., Monday through Friday, except Federal holidays.

For EASA material that is proposed for IBR in this AD, contact EASA, Konrad-Adenauer-Ufer 3, 50668 Cologne, Germany; telephone +49 221 8999 000; email *ADs@easa.europa.eu;* internet *www.easa.europa.eu.* You may find the EASA material on the EASA website at *https://ad.easa.europa.eu.* You may view this material at the FAA, Office of the Regional Counsel, Southwest Region, 10101 Hillwood Pkwy., Room 6N–321, Fort Worth, TX 76177. For information on the availability of this material at the FAA, call (817) 222–5110. This EASA material is also available at *https://www.regulations.gov* by searching for and locating Docket No. FAA–2022–0008.

Examining the AD Docket

You may examine the AD docket at *https://www.regulations.gov* by searching for and locating Docket No. FAA–2022–0008; or in person at Docket Operations between 9 a.m. and 5 p.m., Monday through Friday, except Federal holidays. The AD docket contains this NPRM, the EASA AD, any comments received, and other information. The street address for Docket Operations is listed above.

FOR FURTHER INFORMATION CONTACT: Andrea Jimenez, Aerospace Engineer, COS Program Management Section, Operational Safety Branch, Compliance & Airworthiness Division, FAA, 1600 Stewart Ave., Suite 410, Westbury, NY 11590; telephone (516) 228–7330; email *andrea.jimenez@faa.gov.*

SUPPLEMENTARY INFORMATION:

Comments Invited

The FAA invites you to send any written relevant data, views, or arguments about this proposal. Send your comments to an address listed under **ADDRESSES**. Include ''Docket No. FAA–2022–0008; Project Identifier MCAI–2021–00882–R'' at the beginning of your comments. The most helpful comments reference a specific portion of the proposal, explain the reason for any recommended change, and include supporting data. The FAA will consider all comments received by the closing date and may amend this proposal because of those comments.

Except for Confidential Business Information (CBI) as described in the following paragraph, and other information as described in 14 CFR 11.35, the FAA will post all comments received, without change, to *https://www.regulations.gov,* including any personal information you provide. The agency will also post a report summarizing each substantive verbal contact received about this NPRM.

Confidential Business Information

CBI is commercial or financial information that is both customarily and actually treated as private by its owner. Under the Freedom of Information Act (FOIA) (5 U.S.C. 552), CBI is exempt from public disclosure. If your comments responsive to this NPRM contain commercial or financial information that is customarily treated as private, that you actually treat as private, and that is relevant or responsive to this NPRM, it is important that you clearly designate the submitted comments as CBI. Please mark each page of your submission containing CBI as ''PROPIN.'' The FAA will treat such marked submissions as confidential under the FOIA, and they will not be placed in the public docket of this NPRM. Submissions containing CBI should be sent to Andrea Jimenez, Aerospace Engineer, COS Program Management Section, Operational Safety Branch, Compliance & Airworthiness Division, FAA, 1600 Stewart Ave., Suite 410, Westbury, NY 11590; telephone (516) 228–7330; email *andrea.jimenez@faa.gov.* Any commentary that the FAA receives that is not specifically designated as CBI will be placed in the public docket for this rulemaking.

Background

EASA, which is the Technical Agent for the Member States of the European Union, has issued EASA AD 2021–0179, dated July 27, 2021 (EASA AD 2021–0179) to correct an unsafe condition for Leonardo S.p.A. Helicopters, formerly Finmeccanica S.p.A., AgustaWestland S.p.A., and Agusta S.p.A., Model AW109SP helicopters, all serial numbers.

This proposed AD was prompted by reports of corrosion inside the hoist support assembly affecting both the huck bolt heads and the support surface. Investigation of the root cause for the corrosion is ongoing. The FAA is proposing this AD to address corrosion on the hoist support assembly. This condition, if not addressed, could affect the structural integrity of the hoist support assembly, leading to in-flight detachment of the hoist support and consequent damage to the helicopter, and injury to hoisted persons. See EASA AD 2021–0179 for additional background information.

Related Service Information Under 1 CFR Part 51

EASA AD 2021–0179 requires repetitive inspections of the external and internal surfaces of each affected part for cracking and corrosion and, depending on the findings, accomplishment of corrective actions. If there is no evidence of corrosion on the interior surface of the boom torque tube or on the huck bolt heads, the corrective actions include spraying the interior surface with corrosion preventative compound around the hulk bolt heads from the forward and aft ends of the boom torque tube, and installing new tube plugs on both ends of the boom torque tube. If there is superficial corrosion on the interior surface of the boom torque tube or on the hulk bolt heads, the corrective actions include cleaning the corrosion, spraying the interior surface with corrosion preventative compound, and installing new tube plugs on both ends of the boom torque tube. If corrosion is found that is not superficial corrosion, the corrective action is repair or replacement of the boom torque tube.

If cracking is observed on the external surface of the hoist support assembly the corrective action is replacement of the hoist support assembly. If only corrosion is found on the external surface of the hoist support assembly the corrective actions include cleaning the hoist support assembly.

EASA AD 2021–0179 also allows installing an affected part, provided certain instructions are followed.

This material is reasonably available because the interested parties have access to it through their normal course of business or by the means identified in the **ADDRESSES** section.

FAA's Determination

These helicopters have been approved by EASA and are approved for operation in the United States. Pursuant to the FAA's bilateral agreement with the European Union, EASA has notified the FAA about the unsafe condition described in its AD. The FAA is proposing this AD after evaluating all known relevant information and determining that the unsafe condition described previously is likely to exist or develop on other helicopters of the same type design.

Proposed AD Requirements in This NPRM

This proposed AD would require accomplishing the actions specified in EASA AD 2021–0179, described previously, as incorporated by reference, except for any differences identified as exceptions in the regulatory text of this proposed AD.

Explanation of Required Compliance Information

In the FAA's ongoing efforts to improve the efficiency of the AD process, the FAA developed a process to use some civil aviation authority (CAA) ADs as the primary source of information for compliance with requirements for corresponding FAA ADs. The FAA has been coordinating this process with manufacturers and CAAs. As a result, the FAA proposes to incorporate EASA AD 2021–0179 by reference in the FAA final rule. This proposed AD would, therefore, require compliance with EASA AD 2021–0179 in its entirety through that incorporation, except for any differences identified as exceptions in the regulatory text of this proposed AD. Using common terms that are the same as the heading of a particular section in EASA AD 2021–0179 does not mean that operators need comply only with that section. For example, where the AD requirement refers to ''all required actions and compliance times,'' compliance with this AD requirement is not limited to the section titled ''Required Action(s) and Compliance Time(s)'' in EASA AD 2021–0179. Service information referenced in EASA AD 2021–0179 for compliance will be available at *https://www.regulations.gov* by searching for and locating Docket No. FAA–2022–0008 after the FAA final rule is published.

Interim Action

The FAA considers this proposed AD would be an interim action. If final action is later identified, the FAA might consider further rulemaking.

Costs of Compliance

The FAA estimates that this AD, if adopted as proposed, would affect 40 helicopters of U.S. Registry. The FAA estimates the following costs to comply with this proposed AD.

ESTIMATED COSTS

Action	Labor cost	Parts cost	Cost per product	Cost on U.S. operators
Inspecting	0.50 work-hour × $85 per hour = $42.50 per inspection cycle.	$0	$42.50 per inspection cycle.	$1,700 per inspection cycle.
Installing new boom torque tube plugs.	0.25 work-hour × $85 per hour = $21.25.	5,044	$5,065.25	$202,610.

The FAA estimates the following costs to do any necessary replacements that would be required based on the results of the proposed inspection. The agency has no way of determining the number of aircraft that might need these replacements:

ON-CONDITION COSTS

Action	Labor cost	Parts cost	Cost per product
Cleaning boom torque tube interior or exterior	0.25 work-hour × $85 per hour = $21.25	$0	$21.25
Replacing boom torque tube	6 work-hours × $85 per hour = $510	39,500	40,010
Replacing hoist support assembly	6.50 work-hours × $85 per hour = $552.50	44,864	45,416.50

The FAA has received no definitive data on which to base the cost estimates for the repairs specified in this proposed AD.

The FAA has included all known costs in its cost estimate. According to the manufacturer, however, some of the costs of this proposed AD may be covered under warranty, thereby reducing the cost impact on affected operators.

Authority for This Rulemaking

Title 49 of the United States Code specifies the FAA's authority to issue rules on aviation safety. Subtitle I, section 106, describes the authority of the FAA Administrator. Subtitle VII: Aviation Programs, describes in more detail the scope of the Agency's authority.

The FAA is issuing this rulemaking under the authority described in Subtitle VII, Part A, Subpart III, Section 44701: General requirements. Under that section, Congress charges the FAA with promoting safe flight of civil aircraft in air commerce by prescribing regulations for practices, methods, and procedures the Administrator finds necessary for safety in air commerce. This regulation is within the scope of that authority because it addresses an unsafe condition that is likely to exist or develop on products identified in this rulemaking action.

Regulatory Findings

The FAA determined that this proposed AD would not have federalism implications under Executive Order 13132. This proposed AD would not have a substantial direct effect on the States, on the relationship between the national Government and the States, or on the distribution of power and responsibilities among the various levels of government.

For the reasons discussed above, I certify this proposed regulation:

(1) Is not a ''significant regulatory action'' under Executive Order 12866,

(2) Would not affect intrastate aviation in Alaska, and

(3) Would not have a significant economic impact, positive or negative, on a substantial number of small entities under the criteria of the Regulatory Flexibility Act.

List of Subjects in 14 CFR Part 39

Air transportation, Aircraft, Aviation safety, Incorporation by reference, Safety.

The Proposed Amendment

Accordingly, under the authority delegated to me by the Administrator, the FAA proposes to amend 14 CFR part 39 as follows:

PART 39—AIRWORTHINESS DIRECTIVES

■ 1. The authority citation for part 39 continues to read as follows:

Authority: 49 U.S.C. 106(g), 40113, 44701.

§ 39.13 [Amended]

■ 2. The FAA amends § 39.13 by adding the following new airworthiness directive:

Leonardo S.p.a.: Docket No. FAA–2022–0008; Project Identifier MCAI–2021–00882–R.

(a) Comments Due Date

The FAA must receive comments on this airworthiness directive (AD) by March 7, 2022.

(b) Affected ADs

None.

(c) Applicability

This AD applies to all Leonardo S.p.a. Model AW109SP helicopters, certificated in any category.

(d) Subject

Joint Aircraft Service Component (JASC) Code: 2560, Emergency Equipment.

(e) Unsafe Condition

This AD was prompted by reports of corrosion inside the hoist support assembly (boom assembly) (affected part) that affects both the huck bolt heads (blind bolt fasteners) and the support surface. The FAA is issuing this AD to address corrosion on the hoist support assembly. This condition, if not addressed, could affect the structural integrity of the hoist support assembly, leading to in-flight detachment of the hoist support and consequent damage to the helicopter, and injury to hoisted persons.

(f) Compliance

Comply with this AD within the compliance times specified, unless already done.

(g) Requirements

Except as specified in paragraph (h) of this AD: Comply with all required actions and compliance times specified in, and in accordance with, European Union Aviation

Safety Agency (EASA) AD 2021–0179, dated July 27, 2021 (EASA AD 2021–0179).

(h) Exceptions to EASA AD 2021–0179

(1) Where EASA AD 2021–0179 requires compliance in terms of flight hours, this AD requires using hours time-in-service.

(2) Where EASA AD 2021–0179 refers to its effective date, this AD requires using the effective date of this AD.

(3) Where the service information referenced in EASA AD 2021–0179 specifies discarding parts, this AD requires removing those parts from service.

(4) Where the service information referenced in EASA AD 2021–0179 specifies returning a part to the manufacturer, this AD requires removing that part from service.

(5) Where the service information referenced in EASA AD 2021–0179 specifies submitting photographs to the manufacturer, this AD does not require that action.

(6) Where the service information referenced in EASA AD 2021–0179 specifies attaching a label to the hoist support assembly, this AD does not require that action.

(7) Where paragraph (2) of EASA AD 2021–0179 specifies contacting Leonardo S.p.a. for corrective action instructions, this AD requires replacing or repairing before further flight using a method approved by the Manager, General Aviation and Rotorcraft Section, International Validation Branch, FAA; or EASA; or Leonardo S.p.a.'s EASA Design Organization Approval (DOA). If approved by the DOA, the approval must include the DOA-authorized signature.

(8) This AD does not mandate compliance with the ''Remarks'' section of EASA AD 2021–0179.

(i) No Reporting Requirement

Although the service information referenced in EASA AD 2021–0179 specifies to submit certain information to the manufacturer, this AD does not include that requirement.

(j) Special Flight Permit

Special flight permits may be permitted provided that there are no passengers on board.

(k) Alternative Methods of Compliance (AMOCs)

(1) The Manager, International Validation Branch, FAA, has the authority to approve AMOCs for this AD, if requested using the procedures found in 14 CFR 39.19. In accordance with 14 CFR 39.19, send your request to your principal inspector or local Flight Standards District Office, as appropriate. If sending information directly to the manager of the International Validation Branch, send it to the attention of the person identified in paragraph (l)(2) of this AD. Information may be emailed to: *9-AVS-AIR-730-AMOC@faa.gov.*

(2) Before using any approved AMOC, notify your appropriate principal inspector, or lacking a principal inspector, the manager of the local flight standards district office/certificate holding district office.

(l) Related Information

(1) For EASA AD 2021–0179, contact EASA, Konrad-Adenauer-Ufer 3, 50668 Cologne, Germany; telephone +49 221 8999 000; email *ADs@easa.europa.eu;* internet *www.easa.europa.eu.* You may view this material at the FAA, Office of the Regional Counsel, Southwest Region, 10101 Hillwood Pkwy., Room 6N–321, Fort Worth, TX 76177. For information on the availability of this material at the FAA, call (817) 222–5110. This material may be found in the AD docket at *https://www.regulations.gov* by searching for and locating Docket No. FAA–2022–0008.

(2) For more information about this AD, contact Andrea Jimenez, Aerospace Engineer, COS Program Management Section, Operational Safety Branch, Compliance & Airworthiness Division, FAA, 1600 Stewart Ave., Suite 410, Westbury, NY 11590; telephone (516) 228–7330; email *andrea.jimenez@faa.gov.*

Issued on January 14, 2022.

Lance T. Gant,

Director, Compliance & Airworthiness Division, Aircraft Certification Service.

[FR Doc. 2022–01168 Filed 1–20–22; 8:45 am]

BILLING CODE 4910–13–P

DEPARTMENT OF TRANSPORTATION

Federal Aviation Administration

14 CFR Part 39

[Docket No. FAA–2022–0006; Project Identifier AD–2021–01298–R]

RIN 2120–AA64

Airworthiness Directives; Bell Textron Inc. Helicopters

AGENCY: Federal Aviation Administration (FAA), DOT.

ACTION: Notice of proposed rulemaking (NPRM).

SUMMARY: The FAA proposes to adopt a new airworthiness directive (AD) for certain Bell Textron Inc. Model 205A, 205A–1, 205B, 210, 212, 412, 412CF, and 412EP helicopters with a certain part-numbered tailboom left hand fin spar cap (spar cap) installed. This proposed AD was prompted by reports of cracked spar caps. This proposed AD would require inspecting each spar cap and depending on the inspection results, removing the spar cap from service. The FAA is proposing this AD to address the unsafe condition on these products.

DATES: The FAA must receive comments on this proposed AD by March 7, 2022.

ADDRESSES: You may send comments, using the procedures found in 14 CFR 11.43 and 11.45, by any of the following methods:

- *Federal eRulemaking Portal:* Go to *https://www.regulations.gov.* Follow the instructions for submitting comments.
- *Fax:* (202) 493–2251.
- *Mail:* U.S. Department of Transportation, Docket Operations, M–30, West Building Ground Floor, Room W12–140, 1200 New Jersey Avenue SE, Washington, DC 20590.
- *Hand Delivery:* Deliver to Mail address above between 9 a.m. and 5 p.m., Monday through Friday, except Federal holidays.

For service information identified in this NPRM, contact Bell Textron, Inc., P.O. Box 482, Fort Worth, TX 76101; telephone 1–450–437–2862 or 1–800–363–8023; fax 1–450–433–0272; email *productsupport@bellflight.com;* or at *https://www.bellflight.com/support/contact-support.* You may view this service information at the FAA, Office of the Regional Counsel, Southwest Region, 10101 Hillwood Pkwy., Room 6N–321, Fort Worth, TX 76177. For information on the availability of this material at the FAA, call (817) 222–5110.

Examining the AD Docket

You may examine the AD docket at *https://www.regulations.gov* by searching for and locating Docket No. FAA–2022–0006 or in person at Docket Operations between 9 a.m. and 5 p.m., Monday through Friday, except Federal holidays. The AD docket contains this NPRM, any comments received, and other information. The street address for Docket Operations is listed above.

FOR FURTHER INFORMATION CONTACT: Ameet Shrotriya, Aviation Safety Engineer, DSCO Branch, Compliance & Airworthiness Division, FAA, 10101 Hillwood Pkwy., Fort Worth, TX 76177–1524; phone: (817) 222–5525; email: *Ameet.Shrotriya@faa.gov.*

SUPPLEMENTARY INFORMATION:

Comments Invited

The FAA invites you to send any written relevant data, views, or arguments about this proposal. Send your comments to an address listed under **ADDRESSES**. Include ''Docket No. FAA–2022–0006; Project Identifier AD–2021–01298–R'' at the beginning of your comments. The most helpful comments reference a specific portion of the proposal, explain the reason for any recommended change, and include supporting data. The FAA will consider all comments received by the closing date and may amend this proposal because of those comments.

Except for Confidential Business Information (CBI) as described in the following paragraph, and other

information as described in 14 CFR 11.35, the FAA will post all comments received, without change, to *https://www.regulations.gov,* including any personal information you provide. The agency will also post a report summarizing each substantive verbal contact received about this NPRM.

Confidential Business Information

CBI is commercial or financial information that is both customarily and actually treated as private by its owner. Under the Freedom of Information Act (FOIA) (5 U.S.C. 552), CBI is exempt from public disclosure. If your comments responsive to this NPRM contain commercial or financial information that is customarily treated as private, that you actually treat as private, and that is relevant or responsive to this NPRM, it is important that you clearly designate the submitted comments as CBI. Please mark each page of your submission containing CBI as ''PROPIN.'' The FAA will treat such marked submissions as confidential under the FOIA, and they will not be placed in the public docket of this NPRM. Submissions containing CBI should be sent to Ameet Shrotriya, Aviation Safety Engineer, DSCO Branch, Compliance & Airworthiness Division, FAA, 10101 Hillwood Pkwy., Fort Worth, TX 76177–1524; phone: (817) 222–5525; email: *Ameet.Shrotriya@faa.gov.* Any commentary that the FAA receives which is not specifically designated as CBI will be placed in the public docket for this rulemaking.

Background

The FAA is proposing to adopt a new AD for certain serial-numbered Bell Textron Inc. Model 205A, 205A–1, 205B, 210, 212, 412, 412CF, and 412EP helicopters with a spar cap part number (P/N) 212–030–447–117 installed. This proposed AD was prompted by multiple reports of fatigue cracking in the spar caps. Metallurgical lab reports identified that the cracks originate at the rivet holes, possibly from mechanical damage caused during deburring. This condition, if not addressed, could result in reduced structural integrity of the helicopter and subsequent loss of control of the helicopter.

FAA's Determination

The FAA is issuing this NPRM after determining that the unsafe condition described previously is likely to exist or develop on other products of the same type design.

Related Service Information Under 1 CFR Part 51

The FAA reviewed the following Bell Alert Service Bulletins, each dated April 15, 2020 (ASB):

- ASB 205–20–116 for Model 205A and 205A–1 helicopters, serial numbers (S/N) 30001 through 30065, 30067 through 30165, 30167 through 30187, 30189 through 30296, and 30298 through 30332;
- ASB 205B–20–69 for Model 205B helicopters, S/N 30066, 30166, 30188, and 30297;
- ASB 210–20–13 for all serial-numbered Model 210 helicopters;
- ASB 212–20–162 for Model 212 helicopters, S/N 30502 through 30603, 30611 through 30999, 31101 through 31311, 32101 through 32142, and 35001 through 35103;
- ASB 412–20–180 for Model 412 and 412EP helicopters, S/N 33001 through 33213, 34001 through 34036, 36001 through 36999, 37002 through 37999, 38001 through 38999, and 39101 through 39999; and
- ASB 412CF–20–67 for Model 412CF helicopters, S/N 46400 through 46499.

Bell received a report of a fractured fin spar cap that occurred at vertical fin station (F.S.) 71 through the first rivet hole attaching the skin to the spar cap. Bell states that if undetected, the fin spar cap cracking may lead to additional structural damage. Each ASB specifies procedures for inspecting both flanges of the spar cap between F.S. 50 and F.S. 71 for cracks, loose rivets, and other damage using a 10x magnifying glass and flashlight and inspecting the exterior of the fin skin where it contacts the spar cap for cracks, loose rivets, and/or distortion. If no cracks or other damage are found, each ASB specifies returning the helicopter to service; if a crack or other damage is found, each ASB specifies contacting Bell's Product Support Engineering before further flight. Additionally, each ASB specifies that these inspections are to be accomplished within the next 100 flight hours or 90 days after the ASB's release, whichever occurs first, and every 100 flight hours thereafter.

This service information is reasonably available because the interested parties have access to it through their normal course of business or by the means identified in **ADDRESSES**.

Proposed AD Requirements in This NPRM

This proposed AD would require, within 100 hours time-in-service (TIS) after the effective date of the AD, and thereafter at intervals not to exceed 100 hours TIS, using a 10x or higher power magnifying glass and flashlight, inspecting both flanges of the spar cap for any crack, loose rivet, and other damage (such as a scratch, dent, spalling, or corrosion). This proposed AD would also require inspecting the exterior of the fin skin in the area where it contacts the spar cap for any crack, loose rivet, and distortion. If there is any crack, loose rivet, or other damage in either flange, or if there is any crack, loose rivet, or distortion in the fin skin area, removing the spar cap from service would be required before further flight.

Differences Between This Proposed AD and the Service Information

The ASBs specify contacting Bell if there is a crack or other damage, where as this proposed AD would not. The ASBs also specify the compliance time for the initial inspection is within 100 flight hours or 90 days after April 15, 2020, whichever occurs first; whereas the initial inspection in this proposed AD would be required within 100 hours TIS after the effective date of this AD.

Interim Action

The FAA considers that this proposed AD would be an interim action. The design approval holder may develop a modification that will address the unsafe condition identified in this AD. Once this modification is developed, approved, and available, the FAA might consider additional rulemaking.

Costs of Compliance

The FAA estimates that this AD, if adopted as proposed, would affect 226 helicopters of U.S. registry. The FAA estimates the following costs to comply with this proposed AD, using an average labor rate of $85 per work-hour.

Each inspection would take about 1 work-hour, and there would be no parts costs, for an estimated cost of $85 per inspection and $19,210 for the U.S. fleet per inspection cycle. Replacing a spar cap, if required, would take about 50 work-hours and parts costs would be about $2,000, for an estimated cost of $6,250 per spar cap replacement.

Authority for This Rulemaking

Title 49 of the United States Code specifies the FAA's authority to issue rules on aviation safety. Subtitle I, section 106, describes the authority of the FAA Administrator. Subtitle VII: Aviation Programs, describes in more detail the scope of the Agency's authority.

The FAA is issuing this rulemaking under the authority described in Subtitle VII, Part A, Subpart III, Section 44701: General requirements. Under that section, Congress charges the FAA

with promoting safe flight of civil aircraft in air commerce by prescribing regulations for practices, methods, and procedures the Administrator finds necessary for safety in air commerce. This regulation is within the scope of that authority because it addresses an unsafe condition that is likely to exist or develop on products identified in this rulemaking action.

Regulatory Findings

The FAA determined that this proposed AD would not have federalism implications under Executive Order 13132. This proposed AD would not have a substantial direct effect on the States, on the relationship between the national government and the States, or on the distribution of power and responsibilities among the various levels of government.

For the reasons discussed above, I certify this proposed regulation:

(1) Is not a ''significant regulatory action'' under Executive Order 12866,

(2) Would not affect intrastate aviation in Alaska, and

(3) Would not have a significant economic impact, positive or negative, on a substantial number of small entities under the criteria of the Regulatory Flexibility Act.

List of Subjects in 14 CFR Part 39

Air transportation, Aircraft, Aviation safety, Incorporation by reference, Safety.

The Proposed Amendment

Accordingly, under the authority delegated to me by the Administrator, the FAA proposes to amend 14 CFR part 39 as follows:

PART 39—AIRWORTHINESS DIRECTIVES

■ 1. The authority citation for part 39 continues to read as follows:

Authority: 49 U.S.C. 106(g), 40113, 44701.

§ 39.13 [Amended]

■ 2. The FAA amends § 39.13 by adding the following new airworthiness directive:

Bell Textron Inc.: Docket No. FAA–2022–0006; Project Identifier AD–2021–01298–R.

(a) Comments Due Date

The FAA must receive comments on this airworthiness directive (AD) by March 7, 2022.

(b) Affected ADs

None.

(c) Applicability

This AD applies to the following Bell Textron Inc. helicopters certificated in any category, with a tailboom left hand fin spar cap (spar cap) part number 212–030–447–117 installed.

(1) Model 205A and 205A–1 helicopters, serial number (S/N) 30001 through 30065 inclusive, 30067 through 30165 inclusive, 30167 through 30187 inclusive, 30189 through 30296 inclusive, and 30298 through 30332 inclusive;

(2) Model 205B helicopters, S/N 30066, 30166, 30188, and 30297;

(3) Model 210 helicopters, all S/Ns;

(4) Model 212 helicopters, S/N 30502 through 30603 inclusive, 30611 through 30999 inclusive, 31101 through 31311 inclusive, 32101 through 32142 inclusive, and 35001 through 35103 inclusive;

(5) Model 412 and 412EP helicopters, S/N 33001 through 33213 inclusive, 34001 through 34036 inclusive, 36001 through 36999 inclusive, 37002 through 37999 inclusive, 38001 through 38999 inclusive, and 39101 through 39999 inclusive; and

(6) Model 412CF helicopters, S/N 46400 through 46499 inclusive.

(d) Subject

Joint Aircraft System Component (JASC) Code 5302, Rotorcraft Tail Boom.

(e) Unsafe Condition

This AD was prompted by the discovery of fatigue cracking in the spar cap. A crack in the spar cap, if not detected and corrected, could create stress concentrations at the edge of the rivet holes, resulting in reduced structural integrity of the helicopter and subsequent loss of control of the helicopter. The FAA is issuing this AD to detect and prevent this unsafe condition.

(f) Compliance

Comply with this AD within the compliance times specified, unless already done.

(g) Required Actions

Within 100 hours time-in-service (TIS) after the effective date of this AD, and thereafter at intervals not to exceed 100 hours TIS:

(1) Using a 10x or higher power magnifying glass and a flashlight, inspect both flanges of the spar cap between fin station (F.S.) 50 and F.S. 71 for any crack, loose rivet, and other damage such as a scratch, dent, spalling, or corrosion, as depicted in Figure 1 of Bell Alert Service Bulletin (ASB) 205–20–116, ASB 205B–20–69, ASB 210–20–13, ASB 212–20–162, ASB 412–20–180, or ASB 412CF–20–67, each dated April 15, 2020, as applicable to your helicopter. If either spar cap flange is cracked, has a loose rivet, or has other damage, remove the spar cap from service before further flight.

(2) Inspect the exterior of the fin skin in the area that contacts the spar cap for any crack, loose rivets, and distortion. If there is any crack, loose rivet, or distortion in the fin skin in the area that contacts the spar cap, remove the spar cap from service before further flight.

(h) Alternative Methods of Compliance (AMOCs)

(1) The Manager, DSCO Branch, FAA, has the authority to approve AMOCs for this AD, if requested using the procedures found in 14 CFR 39.19. In accordance with 14 CFR 39.19, send your request to your principal inspector or local Flight Standards District Office, as appropriate. If sending information directly to the manager of the certification office, send it to the attention of the person identified in Related Information.

(2) Before using any approved AMOC, notify your appropriate principal inspector, or lacking a principal inspector, the manager of the local flight standards district office/certificate holding district office.

(i) Related Information

(1) For more information about this AD, contact Ameet Shrotriya, Aviation Safety Engineer, DSCO Branch, Compliance & Airworthiness Division, FAA, 10101 Hillwood Pkwy., Fort Worth, TX 76177–1524; phone: (817) 222–5525; email: *Ameet.Shrotriya@faa.gov.*

(2) For service information identified in this AD, contact Bell Textron, Inc., P.O. Box 482, Fort Worth, TX 76101; telephone 1–450–437–2862 or 1–800–363–8023; fax 1–450–433–0272; email *productsupport@bellflight.com;* or at *https://www.bellflight.com/support/contact-support.* You may view this referenced service information at the FAA, Office of the Regional Counsel, Southwest Region, 10101 Hillwood Pkwy., Room 6N–321, Fort Worth, TX 76177. For information on the availability of this material at the FAA, call (817) 222–5110.

Issued on January 11, 2022.

Gaetano A. Sciortino,

Deputy Director for Strategic Initiatives, Compliance & Airworthiness Division, Aircraft Certification Service.

[FR Doc. 2022–00886 Filed 1–20–22; 8:45 am]

BILLING CODE 4910–13–P

DEPARTMENT OF TRANSPORTATION

Federal Aviation Administration

14 CFR Part 39

[Docket No. FAA–2021–1073; Project Identifier AD–2021–01252–T]

RIN 2120–AA64

Airworthiness Directives; The Boeing Company Airplanes

AGENCY: Federal Aviation Administration (FAA), DOT.

ACTION: Notice of proposed rulemaking (NPRM).

SUMMARY: The FAA proposes to supersede Airworthiness Directive (AD) 2017–24–10, which applies to certain The Boeing Company Model 757–200, –200PF, and –300 series airplanes. AD 2017–24–10 requires repetitive inspections for any cracking of a certain fuselage frame inner chord; identification of the material of a certain fuselage frame inner chord for certain

airplanes; and applicable corrective actions. Since the FAA issued AD 2017–24–10, the FAA has received reports of new crack findings outside of the AD 2017–24–10 inspection area, which the existing inspections will not detect. This proposed AD would continue to require the actions in AD 2017–24–10, would add new airplanes and would require new inspection types in certain areas, an expanded inspection area, additional inspections, and applicable corrective actions. The FAA is proposing this AD to address the unsafe condition on these products.

DATES: The FAA must receive comments on this proposed AD by March 7, 2022.

ADDRESSES: You may send comments, using the procedures found in 14 CFR 11.43 and 11.45, by any of the following methods:

- *Federal eRulemaking Portal:* Go to *https://www.regulations.gov.* Follow the instructions for submitting comments.
- *Fax:* 202–493–2251.
- *Mail:* U.S. Department of Transportation, Docket Operations, M–30, West Building Ground Floor, Room W12–140, 1200 New Jersey Avenue SE, Washington, DC 20590.
- *Hand Delivery:* Deliver to Mail address above between 9 a.m. and 5 p.m., Monday through Friday, except Federal holidays.

For service information identified in this NPRM, contact Boeing Commercial Airplanes, Attention: Contractual & Data Services (C&DS), 2600 Westminster Blvd., MC 110–SK57, Seal Beach, CA 90740–5600; telephone 562–797–1717; internet *https://www.myboeingfleet.com.* You may view this service information at the FAA, Airworthiness Products Section, Operational Safety Branch, 2200 South 216th St., Des Moines, WA. For information on the availability of this material at the FAA, call 206–231–3195. It is also available at *https://www.regulations.gov* by searching for and locating Docket No. FAA–2021–1073.

Examining the AD Docket

You may examine the AD docket at *https://www.regulations.gov* by searching for and locating Docket No. FAA–2021–1073; or in person at Docket Operations between 9 a.m. and 5 p.m., Monday through Friday, except Federal holidays. The AD docket contains this NPRM, any comments received, and other information. The street address for Docket Operations is listed above.

FOR FURTHER INFORMATION CONTACT: Peter Jarzomb, Aerospace Engineer, Airframe Section, FAA, Los Angeles ACO Branch, 3960 Paramount Boulevard, Lakewood, CA 90712–4137; phone: 562–627–5234; email: *peter.jarzomb@faa.gov.*

SUPPLEMENTARY INFORMATION:

Comments Invited

The FAA invites you to send any written relevant data, views, or arguments about this proposal. Send your comments to an address listed under **ADDRESSES**. Include ''Docket No. FAA–2021–1073; Project Identifier AD–2021–01252–T'' at the beginning of your comments. The most helpful comments reference a specific portion of the proposal, explain the reason for any recommended change, and include supporting data. The FAA will consider all comments received by the closing date and may amend the proposal because of those comments.

Except for Confidential Business Information (CBI) as described in the following paragraph, and other information as described in 14 CFR 11.35, the FAA will post all comments received, without change, to *https://www.regulations.gov,* including any personal information you provide. The agency will also post a report summarizing each substantive verbal contact received about this proposed AD.

Confidential Business Information

CBI is commercial or financial information that is both customarily and actually treated as private by its owner. Under the Freedom of Information Act (FOIA) (5 U.S.C. 552), CBI is exempt from public disclosure. If your comments responsive to this NPRM contain commercial or financial information that is customarily treated as private, that you actually treat as private, and that is relevant or responsive to this NPRM, it is important that you clearly designate the submitted comments as CBI. Please mark each page of your submission containing CBI as ''PROPIN.'' The FAA will treat such marked submissions as confidential under the FOIA, and they will not be placed in the public docket of this NPRM. Submissions containing CBI should be sent to Peter Jarzomb, Aerospace Engineer, Airframe Section, FAA, Los Angeles ACO Branch, 3960 Paramount Boulevard, Lakewood, CA 90712–4137; phone: 562–627–5234; email: *peter.jarzomb@faa.gov.* Any commentary that the FAA receives which is not specifically designated as CBI will be placed in the public docket for this rulemaking.

Background

The FAA issued AD 2017–24–10, Amendment 39–19114 (82 FR 57343, December 5, 2017) (AD 2017–24–10), for certain The Boeing Company Model 757–200, –200PF, and –300 series airplanes. AD 2017–24–10 was prompted by reports of cracking found at a certain fuselage frame inner chord. AD 2017–24–10 requires repetitive inspections for any cracking of a certain fuselage frame inner chord; identification of the material of a certain fuselage frame inner chord for certain airplanes; and applicable corrective actions. The agency issued AD 2017–24–10 to detect and correct such cracks, which could result in the cargo door opening during flight, and result in rapid decompression of the airplane and the inability to sustain loads required for continued safe flight and landing.

Actions Since AD 2017–24–10 Was Issued

Since the FAA issued AD 2017–24–10, the FAA has received reports of new crack findings outside of the AD 2017–24–10 inspection area, which the existing inspections will not detect. An operator was accomplishing Boeing Alert Service Bulletin 757–53A0101, dated November 8, 2016, which is the service information required by AD 2017–24–10) on a certain The Boeing Company Model 757–200 airplane and found four cracks ranging from 0.10 to 2.00 inches in length in the station (STA) 1380 frame web and two cracks ranging from 1.00 to 2.12 inches in length in the frame inner chord. The airplane had 23,005 total flight cycles at the time of the crack findings. The frame web was made from 0.09 inch thick 2024–T3 aluminum, and the inner chord was made from 7075–T73 aluminum. Based on the length of the crack in the web at the time of discovery, the cracks in the frame may have initiated in the 2024–T3 web, and would have been hidden behind the guide track fitting. If the cracks start in the frame web, existing Maintenance Planning Data (MPD) and Boeing Alert Service Bulletin 757–53A0101, dated November 8, 2016, inspections do not provide sufficient opportunities to find cracks in the STA 1380 frame before the critical crack length is reached, resulting in an airplane-level safety issue.

In addition, the FAA has received five reports of crack findings in airplanes with production line numbers 1–57, which are made with 7075 material for the inner and outer chord and the frame web. Those airplanes may also have a thinner web gauge than that in airplanes with line numbers 58 and subsequent. Existing inspections for these airplanes do not remove the guide track fitting at STA 1380, and therefore do not provide sufficient opportunity to detect cracks

before the critical crack length is reached.

The root cause for the cracking in the STA 1380 frame inner chord and web under the roller guide track fitting is attributed to the out-of-plane bending stress induced from a mis-rigging condition of the No. 2 cargo door, which allows the roller pin on the lower cargo door to contact the roller guide track fitting. The new proposed repetitive inspections include removing the guide track fitting to inspect for any crack. The FAA is issuing this AD to detect and correct such cracks, which could result in rapid decompression of the airplane and the inability to sustain loads required for continued safe flight and landing.

FAA's Determination

The FAA is issuing this NPRM after determining that the unsafe condition described previously is likely to exist or develop on other products of the same type design.

Related Service Information Under 1 CFR Part 51

The FAA reviewed Boeing Alert Requirements Bulletin 757–53A0118 RB, dated October 22, 2021. This service information specifies procedures for a general visual inspection or a maintenance records check of the STA 1380 frame for any repair, and repetitive surface high frequency eddy current (HFEC) inspections of the STA 1380 frame inner chord and frame web for any cracking, repetitive sub-surface low frequency eddy current (LFEC) inspections of the STA 1380 frame inner chord for any cracking, and applicable corrective actions. Corrective actions include repair.

This AD would also require Boeing Alert Service Bulletin 757–53A0101, dated November 8, 2016, which the Director of the Federal Register approved for incorporation by reference as of January 9, 2018 (82 FR 57343, December 5, 2017).

This service information is reasonably available because the interested parties have access to it through their normal course of business or by the means identified in the **ADDRESSES** section.

Proposed AD Requirements in This NPRM

This proposed AD would retain all requirements of AD 2017–24–10. This proposed AD would add new airplanes and would require new inspection types in certain areas, an expanded inspection area, additional inspections, and applicable corrective actions. This proposed AD would require accomplishment of the actions identified in Boeing Alert Requirements Bulletin 757–53A0118 RB, dated October 22, 2021, described previously, except for any differences identified as exceptions in the regulatory text of this proposed AD.

Accomplishment of the applicable initial inspections and corrective actions specified in the Accomplishment Instructions of Boeing Alert Requirements Bulletin 757–53A0118 RB, dated October 22, 2021, terminates the inspections required by paragraphs (g) and (h) of this proposed AD.

For information on the procedures and compliance times, see this service information at *https://www.regulations.gov* by searching for and locating Docket No. FAA–2021–1073.

Costs of Compliance

The FAA estimates that this AD, if adopted as proposed, would affect 477 airplanes of U.S. registry. The FAA estimates the following costs to comply with this proposed AD:

ESTIMATED COSTS

Action	Labor cost	Parts cost	Cost per product	Cost on U.S. operators
Surface HFEC inspection (retained actions from AD 2017–24–10).	5 work-hours × $85 per hour = $425 per inspection cycle.	$0	$425 per inspection cycle.	$202,725 per inspection cycle.
Identify the material (retained actions from AD 2017–24–10).	Up to 2 work-hours × $85 per hour = $170.	0	Up to $170	Up to $81,090.
General visual inspection (new proposed action).	6 work-hours × $85 per hour = $510.	0	$510	$243,270.
Surface frame inner chord HFEC inspection (new proposed action).	Up to 10 work-hours × $85 per hour = $850 per inspection cycle.	0	Up to $850 per inspection cycle.	Up to $405,450 per inspection cycle.
Sub-surface frame inner chord LFEC inspection (new proposed action).	Up to 6 work-hours × $85 per hour = $510 per inspection cycle.	0	Up to $510 per inspection cycle.	Up to $243,270 per inspection cycle.
Surface HFEC frame web inspection (new proposed action).	Up to 6 work-hours × $85 per hour = $510 per inspection cycle.	0	Up to $510 per inspection cycle.	Up to $243,270 per inspection cycle.

The FAA has received no definitive data on which to base the cost estimates for the on-condition repairs specified in this proposed AD.

Authority for This Rulemaking

Title 49 of the United States Code specifies the FAA's authority to issue rules on aviation safety. Subtitle I, Section 106, describes the authority of the FAA Administrator. Subtitle VII, Aviation Programs, describes in more detail the scope of the Agency's authority.

The FAA is issuing this rulemaking under the authority described in Subtitle VII, Part A, Subpart III, Section 44701, General requirements. Under that section, Congress charges the FAA with promoting safe flight of civil aircraft in air commerce by prescribing regulations for practices, methods, and procedures the Administrator finds necessary for safety in air commerce. This regulation is within the scope of that authority because it addresses an unsafe condition that is likely to exist or develop on products identified in this rulemaking action.

Regulatory Findings

The FAA has determined that this proposed AD would not have federalism implications under Executive Order 13132. This proposed AD would not have a substantial direct effect on the States, on the relationship between the national Government and the States, or on the distribution of power and responsibilities among the various levels of government.

For the reasons discussed above, I certify that the proposed regulation:

(1) Is not a ''significant regulatory action'' under Executive Order 12866,

(2) Would not affect intrastate aviation in Alaska, and

(3) Would not have a significant economic impact, positive or negative, on a substantial number of small entities under the criteria of the Regulatory Flexibility Act.

List of Subjects in 14 CFR Part 39

Air transportation, Aircraft, Aviation safety, Incorporation by reference, Safety.

The Proposed Amendment

Accordingly, under the authority delegated to me by the Administrator, the FAA proposes to amend 14 CFR part 39 as follows:

PART 39—AIRWORTHINESS DIRECTIVES

■ 1. The authority citation for part 39 continues to read as follows:

Authority: 49 U.S.C. 106(g), 40113, 44701.

§ 39.13 [Amended]

■ 2. The FAA amends § 39.13 by:

■ a. Removing Airworthiness Directive (AD) 2017–24–10, Amendment 39–19114 (82 FR 57343, December 5, 2017), and

■ b. Adding the following new AD:

The Boeing Company: Docket No. FAA–2021–1073; Project Identifier AD–2021–01252–T.

(a) Comments Due Date

The FAA must receive comments on this airworthiness directive (AD) action by March 7, 2022.

(b) Affected ADs

This AD replaces AD 2017–24–10, Amendment 39–19114 (82 FR 57343, December 5, 2017) (AD 2017–24–10).

(c) Applicability

This AD applies to all The Boeing Company Model 757–200, –200PF, –200CB, and –300 series airplanes, certificated in any category.

(d) Subject

Air Transport Association (ATA) of America Code 53, Fuselage.

(e) Unsafe Condition

This AD was prompted by reports of cracking found at the fuselage station (STA) 1380 frame inner chord and by reports of new crack findings outside of the AD 2017–24–10 inspection area, which the existing inspections will not detect. The FAA is issuing this AD to detect and correct such cracks, which could result in rapid decompression of the airplane and the inability to sustain loads required for continued safe flight and landing.

(f) Compliance

Comply with this AD within the compliance times specified, unless already done.

(g) Retained Inspection for Group 1 Airplanes, With No Changes

This paragraph restates the requirements of paragraph (g) of AD 2017–24–10, with no changes. For Group 1 airplanes as identified in Boeing Alert Service Bulletin 757–53A0101, dated November 8, 2016: At the applicable time specified in paragraph 1.E., ''Compliance,'' of Boeing Alert Service Bulletin 757–53A0101, dated November 8, 2016; except as specified in paragraph (i)(1) of this AD, do a surface high frequency eddy current (HFEC) inspection for any cracking of the fuselage STA 1380 frame inner chord, and do all applicable corrective actions, in accordance with the Accomplishment Instructions of Boeing Alert Service Bulletin 757–53A0101, dated November 8, 2016; except as specified in paragraph (i)(2) of this AD. Do all applicable corrective actions before further flight. Repeat the surface HFEC inspection, thereafter, at the times specified in paragraph 1.E., ''Compliance,'' of Boeing Alert Service Bulletin 757–53A0101, dated November 8, 2016.

(h) Retained Inspection for Group 2 Airplanes, With No Changes

This paragraph restates the requirements of paragraph (h) of AD 2017–24–10, with no changes. For Group 2 airplanes as identified in Boeing Alert Service Bulletin 757–53A0101, dated November 8, 2016: At the applicable time specified in paragraph 1.E., ''Compliance,'' of Boeing Alert Service Bulletin 757–53A0101, dated November 8, 2016, except as specified in paragraph (i)(1) of this AD, identify the material of the fuselage STA 1380 frame inner chord, in accordance with the Accomplishment Instructions of Boeing Alert Service Bulletin 757–53A0101, dated November 8, 2016.

(1) If the fuselage STA 1380 frame inner chord material 2024–T42 aluminum alloy is found during any identification required by paragraph (h) of this AD: No further action is required by this paragraph for that airplane.

(2) If the fuselage STA 1380 frame inner chord material 7075–T73 aluminum alloy is found during any identification required by the introductory text of paragraph (h) of this AD: Before further flight, do a surface HFEC inspection for any cracking of the fuselage STA 1380 frame inner chord, and do all applicable corrective actions, in accordance with the Accomplishment Instructions of Boeing Alert Service Bulletin 757–53A0101, dated November 8, 2016; except as specified in paragraph (i)(2) of this AD. Do all applicable corrective actions before further flight. Repeat the surface HFEC inspection thereafter at the times specified in paragraph 1.E., ''Compliance,'' of Boeing Alert Service Bulletin 757–53A0101, dated November 8, 2016.

(i) Retained Exceptions to the Service Information, With No Changes

This paragraph restates the requirements of paragraph (i) of AD 2017–24–10, with no changes.

(1) Where Boeing Alert Service Bulletin 757–53A0101, dated November 8, 2016, specifies a compliance time ''after the original issue date of this service bulletin,'' this AD requires compliance within the specified compliance time after January 9, 2018 (the effective date of AD 2017–24–10).

(2) Where Boeing Alert Service Bulletin 757–53A0101, dated November 8, 2016, specifies to contact Boeing for appropriate action and identifies that action as ''RC'' (Required for Compliance): Before further flight, repair the crack using a method approved in accordance with the procedures specified in paragraph (m) of this AD.

(j) New Required Actions

Except as specified by paragraph (k) of this AD: At the applicable times specified in the ''Compliance'' paragraph of Boeing Alert Requirements Bulletin 757–53A0118 RB, dated October 22, 2021, do all applicable actions identified in, and in accordance with, the Accomplishment Instructions of Boeing Alert Requirements Bulletin 757–53A0118 RB, dated October 22, 2021.

Note 1 to paragraph (j): Guidance for accomplishing the actions required by this AD can be found in Boeing Alert Service Bulletin 757–53A0118, dated October 22, 2021, which is referred to in Boeing Alert Requirements Bulletin 757–53A0118 RB, dated October 22, 2021.

(k) New Exceptions to Service Information Specifications

(1) Where the Compliance Time column of the tables in the ''Compliance'' paragraph of Boeing Alert Requirements Bulletin 757–53A0118 RB, dated October 22, 2021, uses the phrase ''the original issue date of the Requirements Bulletin 757–53A0118 RB,'' this AD requires using ''the effective date of this AD.''

(2) Where Boeing Alert Requirements Bulletin 757–53A0118 RB, dated October 22, 2021, specifies contacting Boeing for repair instructions or for alternative inspections: This AD requires doing the repair, or doing the alternative inspections and applicable on-condition actions using a method approved in accordance with the procedures specified in paragraph (m) of this AD.

(l) Terminating Action for Certain Inspections

Accomplishment of the applicable initial inspections and corrective actions specified in the Accomplishment Instructions of Boeing Alert Requirements Bulletin 757–53A0118 RB, dated October 22, 2021, terminates the inspections required by paragraphs (g) and (h) of this AD.

(m) Alternative Methods of Compliance (AMOCs)

(1) The Manager, Los Angeles ACO Branch, FAA, has the authority to approve AMOCs for this AD, if requested using the procedures found in 14 CFR 39.19. In accordance with 14 CFR 39.19, send your request to your principal inspector or responsible Flight Standards Office, as appropriate. If sending information directly to the manager of the certification office, send it to the attention of the person identified in paragraph (n)(1) of this AD. Information may be emailed to: *9-ANM-LAACO-AMOC-Requests@faa.gov.*

(2) Before using any approved AMOC, notify your appropriate principal inspector,

or lacking a principal inspector, the manager of the responsible Flight Standards Office.

(3) An AMOC that provides an acceptable level of safety may be used for any repair, modification, or alteration required by this AD if it is approved by The Boeing Company Organization Designation Authorization (ODA) that has been authorized by the Manager, Los Angeles ACO Branch, FAA, to make those findings. To be approved, the repair method, modification deviation, or alteration deviation must meet the certification basis of the airplane, and the approval must specifically refer to this AD.

(4) AMOCs approved previously for AD 2017–24–10 are not approved as AMOCs with this AD.

(5) Except as specified by paragraph (i) of this AD: For service information that contains steps that are labeled as Required for Compliance (RC), the provisions of paragraphs (m)(5)(i) and (ii) of this AD apply.

(i) The steps labeled as RC, including substeps under an RC step and any figures identified in an RC step, must be done to comply with the AD. If a step or substep is labeled ''RC Exempt,'' then the RC requirement is removed from that step or substep. An AMOC is required for any deviations to RC steps, including substeps and identified figures.

(ii) Steps not labeled as RC may be deviated from using accepted methods in accordance with the operator's maintenance or inspection program without obtaining approval of an AMOC, provided the RC steps, including substeps and identified figures, can still be done as specified, and the airplane can be put back in an airworthy condition.

(n) Related Information

(1) For more information about this AD, contact Peter Jarzomb, Aerospace Engineer, Airframe Section, FAA, Los Angeles ACO Branch, 3960 Paramount Boulevard, Lakewood, CA 90712–4137; phone: 562–627–5234; email: *peter.jarzomb@faa.gov.*

(2) For service information identified in this AD, contact Boeing Commercial Airplanes, Attention: Contractual & Data Services (C&DS), 2600 Westminster Blvd., MC 110–SK57, Seal Beach, CA 90740–5600; telephone 562–797–1717; internet *https://www.myboeingfleet.com.* You may view this referenced service information at the FAA, Airworthiness Products Section, Operational Safety Branch, 2200 South 216th St., Des Moines, WA. For information on the availability of this material at the FAA, call 206–231–3195.

Issued on December 10, 2021.

Lance T. Gant,

Director, Compliance & Airworthiness Division, Aircraft Certification Service.

[FR Doc. 2022–01014 Filed 1–20–22; 8:45 am]

BILLING CODE 4910–13–P

DEPARTMENT OF HEALTH AND HUMAN SERVICES

Food and Drug Administration

21 CFR Part 866

[Docket No. FDA–2021–N–0851]

Medical Devices; Immunology and Microbiology Devices; Classification of Human Leukocyte, Neutrophil and Platelet Antigen and Antibody Tests

AGENCY: Food and Drug Administration, HHS.

ACTION: Proposed rule.

SUMMARY: The Food and Drug Administration (FDA, the Agency, or we) is proposing to classify Human Leukocyte Antigen (HLA), Human Platelet Antigen (HPA), and Human Neutrophil Antigen (HNA) devices, a generic type of device, into class II (special controls). FDA is identifying proposed special controls for HLA, HPA, and HNA devices that are necessary to provide a reasonable assurance of safety and effectiveness. FDA is also giving notice that we do not intend to exempt these device types from premarket notification requirements of the Federal Food, Drug, and Cosmetic Act (FD&C Act). FDA is publishing in this document the recommendations of the Blood Products Advisory Committee, serving as a device classification panel, regarding the classification of these devices. After considering public comments on the proposed classification, FDA will publish a final regulation classifying these device types.

DATES: Submit either electronic or written comments on the proposed rule by April 21, 2022.

ADDRESSES: You may submit comments as follows. Please note that late, untimely filed comments will not be considered. Electronic comments must be submitted on or before April 21, 2022. The *https://www.regulations.gov* electronic filing system will accept comments until 11:59 p.m. Eastern Time at the end of April 21, 2022. Comments received by mail/hand delivery/courier (for written/paper submissions) will be considered timely if they are postmarked or the delivery service acceptance receipt is on or before that date.

Electronic Submissions

Submit electronic comments in the following way:

- *Federal eRulemaking Portal: https://www.regulations.gov.* Follow the instructions for submitting comments. Comments submitted electronically, including attachments, to *https://www.regulations.gov* will be posted to the docket unchanged. Because your comment will be made public, you are solely responsible for ensuring that your comment does not include any confidential information that you or a third party may not wish to be posted, such as medical information, your or anyone else's Social Security number, or confidential business information, such as a manufacturing process. Please note that if you include your name, contact information, or other information that identifies you in the body of your comments, that information will be posted on *https://www.regulations.gov.*
- If you want to submit a comment with confidential information that you do not wish to be made available to the public, submit the comment as a written/paper submission and in the manner detailed (see ''Written/Paper Submissions'' and ''Instructions'').

Written/Paper Submissions

Submit written/paper submissions as follows:

- *Mail/Hand Delivery/Courier (for written/paper submissions):* Dockets Management Staff (HFA–305), Food and Drug Administration, 5630 Fishers Lane, Rm. 1061, Rockville, MD 20852.
- For written/paper comments submitted to the Dockets Management Staff, FDA will post your comment, as well as any attachments, except for information submitted, marked and identified, as confidential, if submitted as detailed in ''Instructions.''

Instructions: All submissions received must include the Docket No. FDA–2021–N–0851 for ''Medical Devices; Immunology and Microbiology Classification of Human Leukocyte, Neutrophil and Platelet Antigen and Antibody Tests.'' Received comments, those filed in a timely manner (see **ADDRESSES**), will be placed in the docket and, except for those submitted as ''Confidential Submissions,'' publicly viewable at *https://www.regulations.gov* or at the Dockets Management Staff between 9 a.m. and 4 p.m., Monday through Friday, 240–402–7500.

- Confidential Submissions—To submit a comment with confidential information that you do not wish to be made publicly available, submit your comments only as a written/paper submission. You should submit two copies total. One copy will include the information you claim to be confidential with a heading or cover note that states ''THIS DOCUMENT CONTAINS CONFIDENTIAL INFORMATION.'' The Agency will review this copy, including the claimed confidential information, in its consideration of comments. The

second copy, which will have the claimed confidential information redacted/blacked out, will be available for public viewing and posted on *https://www.regulations.gov.* Submit both copies to the Dockets Management Staff. If you do not wish your name and contact information to be made publicly available, you can provide this information on the cover sheet and not in the body of your comments and you must identify this information as ''confidential.'' Any information marked as ''confidential'' will not be disclosed except in accordance with 21 CFR 10.20 and other applicable disclosure law. For more information about FDA's posting of comments to public dockets, see 80 FR 56469, September 18, 2015, or access the information at: *https://www.govinfo.gov/content/pkg/FR-2015-09-18/pdf/2015-23389.pdf.*

Docket: For access to the docket to read background documents or the electronic and written/paper comments received, go to *https://www.regulations.gov* and insert the docket number, found in brackets in the heading of this document, into the ''Search'' box and follow the prompts and/or go to the Dockets Management Staff, 5630 Fishers Lane, Rm. 1061, Rockville, MD 20852, 240–402–7500.

FOR FURTHER INFORMATION CONTACT: Myrna Hanna, Center for Biologics Evaluation and Research, Food and Drug Administration, 10903 New Hampshire Ave., Bldg. 71, Rm. 7301, Silver Spring, MD 20993–0002, 240–402–7911.

SUPPLEMENTARY INFORMATION:

Table of Contents

I. Executive Summary
A. Purpose of the Proposed Rule
B. Summary of the Major Provisions of the Proposed Rule
C. Legal Authority
D. Costs and Benefits
II. Table of Abbreviations/Commonly Used Acronyms in This Document
III. Background
A. Statutory and Regulatory Authorities
B. Regulatory History of the Devices
IV. Legal Authority
V. Description of the Proposed Rule and Panel Recommendations
A. Identification
B. Recommended Classification of the Panel
C. Risks to Health and Special Controls
VI. Proposed Classification and FDA's Findings
VII. Proposed Effective Date
VIII. Preliminary Economic Analysis of Impacts
IX. Analysis of Environmental Impact
X. Paperwork Reduction Act of 1995
XI. Federalism
XII. Consultation and Coordination With Indian Tribal Governments
XIII. References

I. Executive Summary

A. Purpose of the Proposed Rule

FDA is proposing to classify HLA, HPA, and HNA devices, a generic type of device, into class II (special controls). The Agency believes that the special controls established by this proposed rule, together with general controls, would provide reasonable assurance of the safety and effectiveness of these devices. FDA is also giving notice that we do not intend to exempt HLA, HPA, and HNA devices from premarket notification requirements of the FD&C Act.

B. Summary of the Major Provisions of the Proposed Rule

FDA is proposing to classify HLA, HPA, and HNA devices, a generic type of device, into class II with special controls. This proposed rule provides device descriptions that include indications for use of the devices and the special controls that will provide reasonable assurance of the safety and effectiveness of these devices.

C. Legal Authority

FDA is proposing this action under the device provisions of the FD&C Act including section 513 of the FD&C Act (21 U.S.C. 360c).

D. Costs and Benefits

The benefits of this proposed rule consist of the cost savings resulting from the reduction in regulatory and economic burden that accompanies the decrease in the number of information requests and incomplete submissions submitted by manufacturers and handled by FDA; however, we lack the information needed that would allow us to quantify these benefits. The number of requests for additional information following manufacturers' 510(k) submissions is small and widely dispersed over the duration of time these devices have been marketed. The classification procedure and outlined special controls will be helpful for HLA, HPA, and HNA manufacturers in preparing their submissions. Further benefits may be derived from the decreased time a notification submission will need to be reviewed and the subsequent potential benefits realized by consumers and manufacturers.

The costs of this proposed rule include one-time upfront labeling redesigns, in addition to initial learning and reading costs. The total estimated one-time costs of this proposed rule are $434,885 (in 2020 dollars). The present value of these costs is $434,885 because they are one-time costs that are expected to occur in the first year. The annualized cost of this proposed rule over 10 years is $54,201 at a seven percent discount rate and $45,632 at a three percent discount rate.

II. Table of Abbreviations/Commonly Used Acronyms in This Document

Abbreviation/acronym	What it means
510(k)	Premarket Notification.
BPAC	Blood Products Advisory Committee.
CFR	Code of Federal Regulations.
FDA	Food and Drug Administration.
FD&C Act	Federal Food, Drug, and Cosmetic Act.
HLA	Human Leukocyte Antigen.
HPA	Human Platelet Antigen.
HNA	Human Neutrophil Antigen.
MAUDE	Manufacturer and User Facility Device Experience.
MDR	Medical Device Report.
Ref	Reference.
TRALI	Transfusion-Related Acute Lung Injury.
U.S.C	United States Code.

III. Background

A. Statutory and Regulatory Authorities

The FD&C Act (21 U.S.C. 301 *et seq.*), as amended by the Medical Device Amendments of 1976, establishes a comprehensive system for the regulation of medical devices intended for human use. Section 513 of the FD&C Act establishes three categories (classes) of devices depending on the regulatory controls needed to provide reasonable assurance of their safety and effectiveness. The three categories of devices are class I (general controls), class II (special controls), and class III (premarket approval).

Class I devices are those devices for which the general controls of the FD&C Act (controls authorized by or under sections 501, 502, 510, 516, 518, 519, or 520 (21 U.S.C. 351, 352, 360, 360f, 360h, 360i, or 360j) or any combination of such sections) are sufficient to provide reasonable assurance of safety and effectiveness of the device; or those devices for which insufficient information exists to determine that general controls are sufficient to provide reasonable assurance of safety and effectiveness or to establish special controls to provide such assurance, but because the devices are not purported or represented to be for a use in supporting or sustaining human life or for a use which is of substantial importance in preventing impairment of human health, and do not present a potential unreasonable risk of illness or injury, are to be regulated by general controls (section 513(a)(1)(A) of the FD&C Act).

Class II devices are those devices for which general controls by themselves are insufficient to provide reasonable assurance of safety and effectiveness, but for which there is sufficient information to establish special controls to provide such assurance, including the promulgation of performance standards, postmarket surveillance, patient registries, development and dissemination of guidelines, recommendations, and other appropriate actions the Agency deems necessary to provide such assurance (section 513(a)(1)(B) of the FD&C Act).

Class III devices are those devices for which insufficient information exists to determine that general controls and special controls would provide a reasonable assurance of safety and effectiveness, and are purported or represented for a use in supporting or sustaining human life or for a use which is of substantial importance in preventing impairment of human health, or present a potential unreasonable risk of illness or injury (section 513(a)(1)(C) of the FD&C Act).

Under section 513(d)(1) of the FD&C Act, devices that were in commercial distribution before the enactment of the Medical Device Amendments of 1976 (1976 amendments) on May 28, 1976 (generally referred to as ''preamendments devices''), are classified after FDA: (1) Receives a recommendation from a device classification panel (an FDA advisory committee); (2) publishes the panel's recommendation, along with a proposed regulation classifying the device, and provides an opportunity for interested persons to submit comments; and (3) publishes a final regulation classifying the device.

FDA has classified most preamendments devices under these procedures, relying upon valid scientific evidence as described in section 513(a)(3) of the FD&C Act and 21 CFR 860.7(c), to determine that there is reasonable assurance of the safety and effectiveness of a device under its conditions of use.

Devices that were not in commercial distribution before May 28, 1976 (generally referred to as ''postamendments devices''), are classified automatically by section 513(f) of the FD&C Act into class III without any FDA rulemaking process. Those devices remain in class III and require premarket approval, unless and until: (1) FDA classifies or reclassifies the device into class I or II or (2) FDA issues an order finding the device to be substantially equivalent, in accordance with section 513(i) of the FD&C Act, to a predicate device that does not require premarket approval.

The Agency determines whether new devices are substantially equivalent to previously marketed devices by means of premarket notification procedures in section 510(k) of the FD&C Act and part 807 of the regulations (21 CFR part 807). The 510(k) premarket notification is a submission made to FDA to demonstrate that the device to be marketed is at least as safe and effective as (*i.e.,* substantially equivalent to) a legally U.S. marketed class I or II device of that same generic type. A generic type of device is a grouping of devices that do not differ significantly in purpose, design, materials, energy source, function, or any other feature related to safety and effectiveness, and for which similar regulatory controls are sufficient to provide reasonable assurance of safety and effectiveness (21 CFR 860.3(i)). When determined to be substantially equivalent, the subject device may be legally marketed in the United States. The legally marketed device to which substantial equivalence is determined is known as the predicate device. A predicate device can be a preamendments device or a postamendments device.

A person may market a preamendments device that has been classified into class III through premarket notification procedures without submission of a premarket approval application until FDA issues a final order under section 515(b) of the FD&C Act (21 U.S.C. 360e(b)) requiring premarket approval.

B. Regulatory History of the Devices

The first product license for Leukocyte Typing Serum was issued in December 1974, by the Bureau of Biologics, FDA. An FDA guideline for the production, testing, and lot release of Leukocyte Typing Serum was issued in 1977 and subsequently codified as Additional Standards in the biologics regulations under 21 CFR 660.10 through 660.15.

In the **Federal Register** of August 1, 1980 (45 FR 51226), FDA published a proposed rule recommending that the Additional Standards for Leukocyte Typing Serum be removed with the subsequent revocation of the existing product licenses. The proposed rule was prompted by the realization of the growing complexities of the HLA system and the difficulty in achieving standardization. The proposed rule was supported by the argument that the products, while biologics, were also medical devices that could be appropriately and efficiently regulated under the FD&C Act as amended by the Medical Device Amendments of 1976 (21 U.S.C 301 et seq). The Agency's intent to classify HLA reagents and kits was described in the preamble to the 1980 proposed rule.

In the **Federal Register** of August 10, 1982 (47 FR 34532), FDA issued a final rule revoking the additional standards for Leukocyte Typing Serum. The final regulation instructed all manufacturers of Leukocyte Typing Serum to register and list under part 807. For those products not currently licensed, manufacturers would be required to submit premarket notifications (510(k) submissions). The first 510(k) cleared HLA device used a preamendment HLA device as predicate.

Since 1982, FDA has cleared approximately 100 HLA device premarket notifications (510(k)) submissions. Since 1993, FDA has cleared seven HPA assays through the 510(k) premarket notifications pathway. Five devices were cleared for the detection of antibodies against HPA and two were cleared for HPA typing. Since 2006, FDA has cleared four HNA devices through the 510(k) premarket

notifications pathway. Two devices were cleared for the detection of antibodies against HNA and two were cleared for HNA typing.

On September 15, 2000, the Blood Products Advisory Committee (BPAC) (2000 BPAC), serving as a device classification panel, provided recommendations to FDA regarding the classification of in vitro diagnostic reagents and kits for use in determining the HLA phenotype or genotype of an individual, or for detecting antibodies to HLA antigens (Ref. 1). The scope of the discussion included devices that are used to support platelet and leukocyte transfusions, or organ and stem cell transplantation. The classification of HLA kits used to predict disease was not discussed at the meeting. The 2000 BPAC agreed unanimously that HLA devices should be classified as class II medical devices. The panel did not agree that the devices should be exempt from the requirement to submit a 510(k). Although the 2000 BPAC recommended classification of the HLA devices as class II, the classification was not finalized by FDA because of competing priorities.

On November 30, 2017, FDA sought recommendations from the BPAC, serving as a device classification panel (the Panel) (Refs. 2 and 3), to discuss the classification of HLA, HPA, and HNA devices. FDA proposed to the Panel that HLA, HPA, and HNA devices be classified as a generic device type. The rationale to classify these devices together was based on the similarities in the biological properties of the three antigen systems, the use of similar technologies for the detection of antigens and antibodies, the clinical use of the test results, and the special controls required to mitigate risks. FDA proposed that these are devices that do not differ significantly in purpose, design, materials, energy source, function, or other features related to safety and effectiveness, and for which similar regulatory controls are sufficient to provide reasonable assurance of safety and effectiveness. The Panel recommended that these devices be classified into class II (special controls) with premarket review. FDA is not aware of new information that has arisen since the Panel meeting that would provide a basis for different recommendations or finding. The recommendations of the Panel are summarized in Section V.

IV. Legal Authority

We are issuing this proposed rule under section 513(a) of the FD&C Act. FDA has authority under this provision of the FD&C Act to issue a regulation to establish special controls for class II devices for which general controls by themselves are insufficient to provide reasonable assurance of safety and effectiveness of the device, and for which there is sufficient information to establish special controls to provide such assurance. Under this authority, FDA is establishing special controls for HLA, HPA, and HNA devices.

V. Description of the Proposed Rule and Panel Recommendations

This section summarizes the Panel's deliberations on November 30, 2017.

A. Identification

FDA described HLA, HNA, and HPA devices for the Panel's consideration:

Human Leukocyte, Neutrophil and Platelet antigen and antibody devices consist of HLA, HNA, and HPA typing and antibody detection devices.

- HLA typing devices are used to determine HLA types, to aid in transfusion or transplantation donor and recipient matching, or to aid in the diagnosis of diseases.
- HLA antibody detection devices are used to detect antibodies to HLA antigens to aid in donor and recipient matching in transfusion or transplantation.
- HPA typing devices are used for the detection of human platelet antigens to aid in donor and recipient matching in blood transfusion or to aid in the diagnosis of diseases.
- HPA antibody detection devices are used to detect autoantibodies and alloantibodies against platelet glycoproteins to aid in donor and recipient matching in blood transfusion or to aid in the diagnosis of diseases.
- HNA typing devices are used for the detection of human neutrophil antigens to aid in donor and recipient matching in blood transfusion or to aid in the diagnosis of diseases.
- HNA antibody detection devices are used to detect autoantibodies and alloantibodies against neutrophil antigens to aid in donor and recipient matching in blood transfusion or to aid in the diagnosis of diseases.

FDA clarified the following devices are not included in the proposed classification:

- HLA, HPA, or HNA devices used as a companion diagnostic device, a device that provides information that is essential for the safe and effective use of a corresponding therapeutic product.
- HLA, HPA, or HNA assays that are intended for clinical use and designed, manufactured, and used within a single laboratory.

B. Recommended Classification of the Panel

The Panel recommended that HLA, HNA, and HPA devices be classified into class II with special controls with premarket review. The Panel agreed that general controls were not sufficient to provide reasonable assurance of safety and effectiveness of HLA, HPA, and HNA devices. The Panel believed that HLA, HPA, and HNA devices present a potentially unreasonable risk of illness, injury, or death. Considering these risks, the Panel agreed that sufficient information exists to establish special controls for these devices. Consequently, the consensus of the Panel was that class II classification (special controls) and premarket review would provide reasonable assurance of safety and effectiveness of these devices.

The Panel considered the following valid scientific evidence to make their recommendation regarding the safety and effectiveness of these devices under its conditions of use. Specifically, the Panel considered the history of safety and effectiveness of HLA, HPA, and HNA devices over many years of use; the results of an FDA review of the scientific literature; medical device reports (MDRs) of adverse events or malfunctions; device recalls, and FDA's regulatory experiences with the devices.

C. Risks to Health and Special Controls

As required by section 513(d)(1) of the FD&C Act, FDA provided to the Panel the following summary of valid scientific evidence regarding the benefits and risks of HLA, HPA, and HNA devices. A systemic literature review indicates that the use of these devices has improved patient care in transfusion and transplantation, and in disease diagnosis. HLA matching between the donor and recipient is a key strategy to reduce rejection. The presence of anti-HLA antibodies, especially donor-specific antibodies, has been associated with worse outcomes after transplantation or transfusion. Identification of HLA antibodies allows for informed decisions regarding whether to accept and transplant an organ for a specific recipient. In similar fashion, HPA and HLA devices provide a means to detect and identify related antigens and antibodies facilitating transfusion with compatible blood (platelet) products. In addition, HNA and HLA devices provide laboratorians and clinicians tools to investigate transfusion-related acute lung injury (TRALI) reactions and/or mitigate the risk of future TRALI reactions associated with implicated blood donors.

However, available literature, MDRs, and medical device recall data indicate that HLA, HPA, and HNA devices can malfunction. These devices may generate false positive, false negative, or inconsistent results and have the potential to cause adverse health consequences. Suspected device-associated deaths, serious injuries, and malfunctions are reported to FDA through the Manufacturer and User Facility Device Experience (MAUDE) database. Prior to the Panel meeting, FDA conducted queries of the MAUDE database to identify MDRs related to the use of HLA, HPA, and HNA devices. The search was restricted to reports that FDA received and entered into the database before May 1, 2017. There were 477 MDRs for HLA devices. Most MDRs (464) were reported for HLA genotyping devices, while 13 MDRs were reported for HLA antibody detection devices. All MDRs with reportable category information are malfunctions. The most frequent malfunctions are incorrect reactivity assignments that lead to mistype or no type HLA results. There have been no reported deaths or serious injuries related to these malfunctions. These medical device reports suggest that 510(k) premarket notification of HLA devices is a necessary means to minimize adverse health consequences that may result from HLA device malfunctions. Compared to HLA devices, there are few HPA and HNA devices in the U.S. market and few reported MDRs. The queries of the MAUDE database prior to the Panel meeting identified only two MDRs for HPA devices and no MDRs for HNA devices. However, these devices share similar technologies and clinical applications to HLA devices and have the potential for malfunctions that may cause adverse health consequences. Therefore, 510(k) premarket notification of HPA and HNA devices is needed to minimize adverse health consequences that may result from HPA or HNA device malfunction.

Similarly, prior to the Panel meeting, FDA searched the Medical Device Recalls database for all recalls received before May 1, 2017, for these devices. Of the total 37 HLA device recalls, none were classified as class I recalls, in which the violative product could cause serious adverse health consequences or death. A total of 19 recalls were classified as class II, and 18 were classified as class III. Most of the recalls (32 of 37) were for products that failed to provide correct testing results (false negative, false positive, mistype, or no type). The root causes leading to incorrect HLA typing results include incorrect reactivity assignments, lack of testing sample(s) with specific allele before releasing, and manufacturing errors. The HLA antibody device recalls were due to manufacturing errors during the production of recombinant HLA proteins, such as unstable transfectant. No recalls were reported for HPA and HNA devices. However, these devices share similarities with the HLA devices and are likely prone to similar malfunctions.

FDA presented the following risks to health associated with HLA, HPA, and HNA devices: Patient injury or death due to: (1) Poor graft survival or function due to transplantation of incompatible hematopoietic cells, tissue, or organ; (2) graft rejection because of the transplantation of incompatible hematopoietic cells, tissue, or organ; (3) graft-versus-host disease because of the transplantation of incompatible immune system cells; (4) incorrect or delayed diagnosis of medically related conditions or assessment of future risk of adverse outcomes because of incorrect HLA, HPA, or HNA test results; (5) transfusion reaction (*e.g.,* transfusion associated lung injury, post transfusion purpura) due to incorrect HLA, HPA, or HNA test results; and, (6) platelet refractoriness because of incorrect HLA or HPA typing or antibody detection results.

FDA next proposed to the Panel measures to mitigate the risks to health associated with HLA, HNA, and HPA devices. The identified risks to health and the special controls to mitigate these risks (explained in the paragraph immediately after the table) are summarized in the following table:

TABLE 1—SUMMARY OF RISKS TO HEALTH AND PROPOSED SPECIAL CONTROLS

Risk to health	Method of mitigation (*i.e.,* special control)
Inaccurate test results (*i.e.,* false positive or false negative results) can result in adverse health consequences.	Special controls (1) and (2).
Failure of software to correctly interpret test results can result in adverse health consequences	Special controls (1)(e) and (1)(f).

FDA proposed the following special controls (cross-referenced in the table above) to the Panel for HLA, HPA, and HNA devices: (1) Premarket submissions must include detailed documentation of the following information: (a) Device accuracy study using well-characterized samples representing as many targets as possible; (b) precision studies to evaluate possible sources of variation that may affect test results; (c) comparison studies to evaluate the device's performance compared to a predicate; (d) specific information that addresses or mitigates risks associated with false positive antibody reactivity *e.g.,* reactivity with denatured/cryptic epitopes, if applicable; (e) description of how the assay cutoff was established and validated as well as supporting data; (f) documentation for device software, including, but not limited to, software requirement specifications, software design specification, *e.g.,* algorithms, alarms and device limitations; hazard analysis, traceability matrix, verification and validation testing, unresolved anomalies, hardware and software specifications; electromagnetic compatibility and wireless testing; (g) for multiplex assays in which large numbers of probes and/or primers are handled during manufacturing process, premarket submissions should provide the design specifications that are in place to prevent incorrect reactivity assignment; (h) description of a plan on how to ensure the performance characteristics of the device remain unchanged over time when new HLA alleles are identified, and/or reactivity assignments are changed from the assignments at the time the device was evaluated; and (2) device labeling must include: (a) A limitation statement that reads, ''The results should not be used as the sole basis for making a clinical decision;'' and (b) a warning that reads ''The device has not been cleared or approved for use as a companion diagnostic.''

The Panel members agreed with the special controls proposed by FDA.

VI. Proposed Classification and FDA's Findings

After considering the recommendations of the Panel and the valid scientific evidence, including the

published literature, MDRs, recall information, and FDA's regulatory experience with these device types, FDA proposes to classify HLA, HPA, and HNA devices as class II devices (special controls) with premarket review. FDA believes general controls by themselves are insufficient to provide reasonable assurance of safety and effectiveness for these devices and there is sufficient information to establish special controls to provide such assurance. FDA believes that special controls, in addition to general controls, would provide reasonable assurance of the safety and effectiveness of HLA, HPA, and HNA devices and would, therefore, mitigate the risks to health associated with their use.

We are proposing to classify the devices as a generic type of device because of the similarities in the biological properties of the three antigen systems, the use of similar technologies for the detection of antigens and antibodies, the clinical use of the test results, and the special controls required to mitigate risks. The proposed device identification includes the indications for use of HLA, HPA, and HNA devices subject to the classification. The following devices are not included in the proposed classification: HLA, HPA, or HNA devices used as a companion diagnostic device, a device that provides information that is essential for the safe and effective use of a corresponding therapeutic product.

The proposed regulation also includes special controls that are necessary to provide a reasonable assurance of the safety and efficacy of the devices. When developing the special controls, we considered the recommendations provided in the FDA guidance document entitled ''Recommendations for Premarket Notification (510(k)) Submissions for Nucleic Acid-Based Human Leukocyte Antigen (HLA) Test Kits Used for Matching of Donors and Recipients in Transfusion and Transplantation'' (Ref. 4).

Section 510(m) of the FD&C Act provides that a class II device may be exempted from premarket notification requirements under section 510(k) of the FD&C Act, if the Agency determines that premarket notification is not necessary to assure the safety and effectiveness of the device. The Agency does not intend to exempt HNA, HPA, and HNA devices from 510(k) premarket notification as allowed under section 510(m) of the FD&C Act. FDA believes premarket notification is necessary for these devices to assure their safety and effectiveness.

VII. Proposed Effective Date

FDA proposes that any final regulation based on this proposal become effective 30 days after its date of publication in the **Federal Register**.

VIII. Preliminary Economic Analysis of Impacts

We have examined the impacts of the proposed rule under Executive Order 12866, Executive Order 13563, the Regulatory Flexibility Act (5 U.S.C. 601–612), and the Unfunded Mandates Reform Act of 1995 (Pub. L. 104–4). Executive Orders 12866 and 13563 direct us to assess all costs and benefits of available regulatory alternatives and, when regulation is necessary, to select regulatory approaches that maximize net benefits (including potential economic, environmental, public health and safety, and other advantages; distributive impacts; and equity). We believe that this proposed rule is not a significant regulatory action as defined by Executive Order 12866.

The Regulatory Flexibility Act requires us to analyze regulatory options that would minimize any significant impact of a rule on small entities. Because of the limited impact of this proposed rule, we propose to certify that the proposed rule will not have a significant economic impact on a substantial number of small entities.

The Unfunded Mandates Reform Act of 1995 (section 202(a)) requires us to prepare a written statement, which includes an assessment of anticipated costs and benefits, before proposing ''any rule that includes any Federal mandate that may result in the expenditure by State, local, and tribal governments, in the aggregate, or by the private sector, of $100,000,000 or more (adjusted annually for inflation) in any one year.'' The current threshold after adjustment for inflation is $158 million, using the most current (2020) Implicit Price Deflator for the Gross Domestic Product. This proposed rule would not result in an expenditure in any year that meets or exceeds this amount.

If finalized, the proposed rule would classify HLA, Human HPA, and HNA devices as a generic group of devices into class II (special controls). The Agency believes that the special controls included in this proposed rule, together with general controls, are necessary to provide reasonable assurance of the safety and effectiveness of these devices. The special controls in the proposed rule are already generally practiced by manufacturers of currently cleared devices; the primary change consists of a labeling update. FDA is also giving notice that we do not intend to exempt HLA, HPA, and HNA devices from premarket notification requirements of the FD&C Act.

The proposed rule's costs are summarized in table 2; we are unable to quantify benefits for this proposed rule. Costs are calculated as the one-time costs of relabeling affected devices to comply with the proposed rule and costs associated with reading and understanding the proposed rule. The total estimated one-time costs of this rule are $434,885 (in 2020 dollars). The present value of these costs is $443,885 because they are one-time costs that are expected to occur in the first year. The annualized cost of this proposed rule over 10 years is $54,201 at a seven percent discount rate and $45,632 at a three percent discount rate.

The benefits of this proposed rule consist of the cost savings resulting from the reduction in regulatory and economic burden that accompanies the decrease in the number of information requests and incomplete submissions submitted by manufacturers and handled by FDA; however, we lack the information needed that would allow us to quantify these benefits. The number of requests for additional information following manufacturers' 510(k) submissions is small and widely dispersed over the duration of time these devices have been marketed. The classification procedure and outlined special controls would be helpful for HLA, HPA, and HNA manufacturers in preparing their submissions. Further benefits may be derived from the decreased time a notification submission would need to be reviewed and the subsequent potential benefits realized by consumers and manufacturers. The costs of this proposed rule include one-time upfront labeling redesigns, in addition to initial learning and reading costs.

Consistent with Executive Order 12866, table 2 provides the costs and a description of benefits for this proposed rule.

TABLE 2—SUMMARY OF BENEFITS AND COSTS IN 2020 DOLLARS OVER A 10-YEAR TIME HORIZON

Category	Primary estimate	Low estimate	High estimate	Units			Notes
				Year dollars	Discount rate (%)	Period covered	
Benefits:							
Annualized Monetized $/year				2020	7	10	
				2020	3	10	
Annualized Quantified					7		
					3		
Qualitative							Improved labeling and enhanced certainty for 510(k) submissions.
Costs:							
Annualized Monetized $/year	$54,201			2020	7	10	
	$45,632			2020	3	10	
Annualized Quantified					7		
					3		
Qualitative							
Transfers:							
Federal Annualized Monetized $/year					7		
					3		
From/To	From:			To:			
Other Annualized Monetized $/year					7		
					3		
From/To	From:			To:			
Effects:							
State, Local or Tribal Government:							
Small Business:							
Wages:							
Growth:							

We have developed a comprehensive Preliminary Economic Analysis of Impacts that assesses the impacts of the proposed rule. The full analysis of economic impacts is available in the docket for this proposed rule (Ref. 5) and at *https://www.fda.gov/about-fda/reports/economic-impact-analyses-fda-regulations.*

IX. Analysis of Environmental Impact

We have determined under 21 CFR 25.34(b) that this action is of a type that does not individually or cumulatively have a significant effect on the human environment. Therefore, neither an environmental assessment nor an environmental impact statement is required.

X. Paperwork Reduction Act of 1995

FDA tentatively concludes that this proposed rule contains no collection of information. Therefore, clearance by the Office of Management and Budget under the Paperwork Reduction Act of 1995 is not required.

XI. Federalism

We have analyzed this proposed rule in accordance with the principles set forth in Executive Order 13132. We have determined that this proposed rule does not contain policies that have substantial direct effects on the States, on the relationship between the National Government and the States, or on the distribution of power and responsibilities among the various levels of government. Accordingly, we conclude that the proposed rule does not contain policies that have federalism implications as defined in the Executive Order and, consequently, a federalism summary impact statement is not required.

XII. Consultation and Coordination With Indian Tribal Governments

We have analyzed this proposed rule in accordance with the principles set forth in Executive Order 13175. We have tentatively determined that the proposed rule does not contain policies that would have a substantial direct effect on one or more Indian Tribes, on the relationship between the Federal Government and Indian Tribes, or on the distribution of power and responsibilities between the Federal Government and Indian Tribes. The Agency solicits comments from tribal officials on any potential impact on Indian Tribes from this proposed action.

XIII. References

The following references are on display at the Dockets Management Staff (see **ADDRESSES**) and are available for viewing by interested persons between 9 a.m. and 4 p.m., Monday through Friday; they are also available electronically at *https://www.regulations.gov.* FDA has verified the website addresses, as of the date this document publishes in the **Federal Register**, but websites are subject to change over time.

1. Blood Products Advisory Committee Meeting transcript—September 15, 2000 (pp. 209–220), available at: *https://wayback.archive-it.org/7993/20170404105835/https:/www.fda.gov/ohrms/dockets/ac/00/transcripts/3649t2c.pdf.*

2. Blood Products Advisory Committee Meeting transcript—November 30, 2017, available at: *https://www.fda.gov/downloads/AdvisoryCommittees/CommitteesMeetingMaterials/BloodVaccinesandOtherBiologics/BloodProductsAdvisoryCommittee/UCM590282.pdf* .

3. FDA Executive Summary. Classification of Human Leukocyte, Neutrophil and Platelet Antigen or Antibody Tests—November 30, 2017, available at: *https://www.fda.gov/downloads/AdvisoryCommittees/CommitteesMeetingMaterials/BloodVaccinesandOtherBiologics/BloodProductsAdvisoryCommittee/UCM586203.pdf.*

4. ''Recommendations for Premarket Notification (510(k)) Submissions for Nucleic Acid-Based Human Leukocyte Antigen (HLA) Test Kits Used for Matching of Donors and Recipients in Transfusion and Transplantation: Guidance for Industry,'' July 2015, available at: *https://www.fda.gov/*

regulatory-information/search-fda-guidance-documents/recommendations-premarket-notification-510k-submissions-nucleic-acid-based-human-leukocyte-antigen.

5. FDA, ''Medical Devices; Immunology and Microbiology Devices; Classification of Human Leukocyte, Neutrophil and Platelet Antigen and Antibody Tests,'' Preliminary Regulatory Impact Analysis Initial Regulatory Flexibility Analysis Unfunded Mandates Reform Act Analysis,'' 2019 (available at *https://www.fda.gov/about-fda/reports/economic-impact-analyses-fda-regulations.*

List of Subjects in 21 CFR Part 866

Biologics, Laboratories, Medical devices.

Therefore, under the Federal Food, Drug, and Cosmetic Act, and under authority delegated to the Commissioner of Food and Drugs, we propose that 21 CFR part 866 be amended as follows:

PART 866—IMMUNOLOGY AND MICROBIOLOGY DEVICES

■ 1. The authority citation for part 866 continues to read as follows:

Authority: 21 U.S.C. 351, 360, 360c, 360e, 360j, 360l, 371.

■ 2. Add § 866.5960 to subpart F to read as follows:

§ 866.5960 Human Leukocyte, Human Neutrophil, and Human Platelet antigen and antibody devices.

(a) *Identification.* Human Leukocyte, Human Neutrophil, and Human Platelet antigen and antibody devices consist of Human Leukocyte Antigen (HLA), Human Platelet Antigen (HPA), and Human Neutrophil Antigen (HNA) typing and antibody detection devices.

(1) HLA typing devices are used to determine HLA types, to aid in transfusion or transplantation donor and recipient matching, or to aid in the diagnosis of diseases.

(2) HLA antibody detection devices are used to detect antibodies to HLA antigens to aid in donor and recipient matching in transfusion or transplantation.

(3) HPA typing devices are used for the detection of human platelet antigens to aid in donor and recipient matching in blood transfusion or to aid in the diagnosis of diseases.

(4) HPA antibody detection devices are used to detect autoantibodies and alloantibodies against platelet glycoproteins to aid in donor and recipient matching in blood transfusion or to aid in the diagnosis of diseases.

(5) HNA typing devices are used for the detection of human neutrophil antigens to aid in donor and recipient matching in blood transfusion or to aid in the diagnosis of diseases.

(6) HNA antibody detection devices are used to detect autoantibodies and alloantibodies against neutrophil antigens to aid in donor and recipient matching in blood transfusion or to aid in the diagnosis of diseases.

(b) *Classification.* Class II (special controls). HLA, HPA, and HNA typing devices must comply with the following special controls:

(1) Premarket submissions must include detailed documentation of the following:

(i) Device accuracy study using well-characterized samples representing as many targets as possible.

(ii) Precision studies to evaluate possible sources of variation that may affect test results.

(iii) Comparison studies to evaluate the device's performance compared to a predicate.

(iv) Specific information that addresses or mitigates risks associated with false positive antibody reactivity, *e.g.,* reactivity with denatured/cryptic epitopes, if applicable.

(v) Description of how the assay cutoff was established and validated as well as supporting data.

(vi) Documentation for device software, including, but not limited to, software requirement specifications, software design specifications, *e.g.,* algorithms, alarms, and device limitations; hazard analysis, traceability matrix, verification and validation testing, unresolved anomalies, hardware and software specifications; electromagnetic compatibility and wireless testing.

(vii) Design specifications that are in place to prevent incorrect reactivity assignment or multiplex assays in which large numbers of probes and/or primers are handled during manufacturing process.

(viii) Description of a plan on how to ensure the performance characteristics of the device remain unchanged over time when new HLA alleles are identified and/or reactivity assignments are changed from the assignments at the time the device was evaluated.

(2) The device labeling must include:

(i) A limitation statement that reads, ''The results should not be used as the sole basis for making a clinical decision.''

(ii) A warning that reads ''The device has not been cleared or approved for use as a companion diagnostic.''

Dated: January 11, 2022.

Janet Woodcock,

Acting Commissioner of Food and Drugs.

[FR Doc. 2022–01156 Filed 1–20–22; 8:45 am]

BILLING CODE 4164–01–P

DEPARTMENT OF DEFENSE

Department of the Army, Corps of Engineers

33 CFR Part 334

[COE–2021–0006]

Eagle River From Bravo Bridge to Eagle Bay in Knik Arm, Richardson Training Area on Joint Base Elmendorf-Richardson, Alaska; Restricted Area

AGENCY: U.S. Army Corps of Engineers, DoD.

ACTION: Notice of proposed rulemaking and request for comments.

SUMMARY: The U.S. Army Corps of Engineers (Corps) is proposing to revise its regulations to establish a restricted area within the Richardson Training Area on Joint Base Elmendorf-Richardson (JBER), at Eagle River. The United States Army, Alaska (USARAK) G3/5/7 Training and Support Activity-Alaska (TSA–AK) requested establishment of a restricted area which would be located in the area of navigable waters extending from the span on Bravo Bridge across Eagle River to the mouth of Eagle River Knik Arm (Eagle River channel). Establishment of the restricted area would prevent all watercraft navigations and individuals from entering an active military range munitions impact area at all times, except for authorized vessels and individuals engaged in support of military training and management activities. This restricted area is necessary to avoid inadvertent entry into the impact area during live-fire weapons training, exposure to hazardous noise, and inadvertent encounters with unexploded ordnance.

DATES: Written comments must be submitted on or before February 22, 2022.

ADDRESSES: You may submit comments, identified by docket number COE–2021–0006, by any of the following methods:

Federal eRulemaking Portal: http://www.regulations.gov. Follow the instructions for submitting comments.

Email: david.b.olson@usace.army.mil. Include the docket number, COE–2021–0006, in the subject line of the message.

Mail: U.S. Army Corps of Engineers, Attn: CECW–CO–R (David B. Olson), 441 G Street NW, Washington, DC 20314–1000.

Hand Delivery/Courier: Due to security requirements, we cannot receive comments by hand delivery or courier.

Instructions: Direct your comments to docket number COE–2021–0006. All comments received will be included in the public docket without change and may be made available on-line at *http://www.regulations.gov,* including any personal information provided, unless the commenter indicates that the comment includes information claimed to be Confidential Business Information (CBI) or other information whose disclosure is restricted by statute. Do not submit information that you consider to be CBI, or otherwise protected, through *regulations.gov* or email. The *regulations.gov* website is an anonymous access system, which means we will not know your identity or contact information unless you provide it in the body of your comment. If you send an email directly to the Corps without going through *regulations.gov,* your email address will be automatically captured and included as part of the comment that is placed in the public docket and made available on the internet. If you submit an electronic comment, we recommend that you include your name and other contact information in the body of your comment and with any compact disk you submit. If we cannot read your comment because of technical difficulties and cannot contact you for clarification, we may not be able to consider your comment. Electronic comments should avoid the use of any special characters, any form of encryption, and be free of any defects or viruses.

Docket: For access to the docket to read background documents or comments received, go to *www.regulations.gov.* All documents in the docket are listed. Although listed in the index, some information is not publicly available, such as CBI or other information whose disclosure is restricted by statute. Certain other material, such as copyrighted material, is not placed on the internet and will be publicly available only in hard copy form.

FOR FURTHER INFORMATION CONTACT: Mr. David Olson, Headquarters, U.S. Army Corps of Engineers, Operations and Regulatory Community of Practice, Washington, DC at 202–761–4922.

SUPPLEMENTARY INFORMATION:

Background

Pursuant to its authorities in Section 7 of the Rivers and Harbors Act of 1917 (40 Stat 266; 33 U.S.C. 1) and Chapter XIX of the Army Appropriations Act of 1919 (40 Stat 892; 33 U.S.C. 3) the Corps is proposing to amend the regulations at 33 CFR part 334 by establishing a restricted area in the Eagle River channel. The amendment to this regulation will allow the USARAK Commander to prevent all watercraft navigations and individuals from entering an active military range (Richardson Training Area, Joint Base Elmendorf-Richardson) munitions impact area at all times, except for authorized vessels and individuals engaged in support of military training and management activities. This restricted area will be in place as a precautionary measure to protect the public from inadvertently entering the impact area during live-fire weapons training, encountering hazardous noise in the vicinity of the impact area, and encountering unexploded ordnance.

Procedural Requirements

a. *Regulatory Planning and Review.* This proposed rule is not a ''significant regulatory action'' under Executive Order 12866 (58 FR 51735, October 4, 1993) and it was not submitted to the Office of Management and Budget for review.

b. *Regulatory Flexibility Act, as Amended by the Small Business Regulatory Enforcement Fairness Act of 1996, 5 U.S.C. 601 et seq.* This rule has been reviewed under the Regulatory Flexibility Act (Pub. L. 96–354). The Regulatory Flexibility Act generally requires an agency to prepare a regulatory flexibility analysis of any rule subject to notice-and-comment rulemaking requirements under the Administrative Procedure Act or any other statute unless the agency certifies that the rule will not have a significant economic impact on a substantial number of small entities (*i.e.,* small businesses and small governments).

The Corps certifies under 5 U.S.C. 605(b) that this proposed rule would not have a significant economic impact on a substantial number of small entities. The restricted area is necessary to protect public safety. This restricted regulation would prevent all watercraft and individuals from entering an activity military range munitions impact area at all times, except for authorized vessels and individuals engaged in support of military training and management activities. The regulation would allow people, watercraft, or vessels to enter or remain in the waters in the restricted area as long as they are authorized by the enforcing agency. Small entities can utilize navigable waters outside of the restricted area. Unless information is obtained to the contrary during the comment period, the Corps expects that the economic impact of the proposed restricted area would have practically no impact on the public, any anticipated navigational hazard or interference with existing waterway traffic. After considering the economic impacts of this restricted area regulation on small entities, I certify that this proposed rule would not have a significant impact on a substantial number of small entities.

c. *Review Under the National Environmental Policy Act.* Due to the administrative nature of this action and because there is no intended change in the use of the area, the Corps expects that this regulation, if adopted, will not have a significant impact on the quality of the human environment and, therefore, preparation of an environmental impact statement will not be required. An environmental assessment will be prepared after the public notice period is closed and all comments have been received and considered.

d. *Unfunded Mandates Act.* This proposed rule does not contain a federal mandate that may result in expenditures of $100 million or more for tribal, state, and local governments, in the aggregate, or the private sector in any one year. Therefore, this proposed rule is not subject to the requirements of Sections 202 and 205 of the Unfunded Mandates Reform Act (UMRA). The proposed rule contains no regulatory requirements that might significantly or uniquely affect small governments. Therefore, the proposed rule is not subject to the requirements of Section 203 of UMRA.

List of Subjects in 33 CFR Part 334

Danger zones, Navigation (water), Restricted areas, Waterways.

For the reasons set forth in the summary above, the Corps proposes to amend 33 CFR part 334 as follows:

PART 334—DANGER ZONE AND RESTRICTED AREA REGULATIONS

■ 1. The authority citation for part 334 continues to read as follows:

Authority: 40 Stat. 266 (33 U.S.C. 1) and 40 Stat. 892 (33 U.S.C. 3).

■ 2. Add § 334.1305 to read as follows:

§ 334.1305 Eagle River from Bravo Bridge to its mouth at Eagle Bay in Knik Arm, Richardson Training Area on Joint Base Elmendorf-Richardson, Alaska; restricted area.

(a) *Restricted area.* The restricted area consists of navigable waters within an area defined as beginning a point on shore at latitude 61°19′40.1″ N, longitude 149°44′20.336″ W; thence easterly to latitude 61°19′41.59″ N, longitude 149°44′6.825″ W; 3.06 nautical miles southerly along the river to latitude 61°18′40.13″ N, longitude

149°41′16.12″ W; thence southerly to latitude 61°18′38.404″ N, to longitude 149°41′14.73″ W. The datum for these coordinates is NAD–83.

(b) *The regulation.* The restricted area is permanently closed for public use at all times. No persons, watercraft, or vessels shall enter, or remain, in the area except for those authorized by the enforcing agency.

(c) *Enforcement.* This regulation will be enforced by the Commander, United States Army-Alaska.

Thomas P. Smith,

Chief, Operations and Regulatory Division.

[FR Doc. 2022–01011 Filed 1–20–22; 8:45 am]

BILLING CODE 3720–58–P

ENVIRONMENTAL PROTECTION AGENCY

40 CFR Part 52

[EPA–R03–OAR–2021–0854; FRL–9381–01–R3]

Air Plan Approval; Delaware; Philadelphia Area 2017 Base Year Inventory for the Ozone National Ambient Air Quality Standard

AGENCY: Environmental Protection Agency (EPA).

ACTION: Proposed rule.

SUMMARY: The Environmental Protection Agency (EPA) is proposing to approve a state implementation plan (SIP) revision formally submitted by the State of Delaware. This revision consists of the base year inventory for the Delaware portion of the Philadelphia-Wilmington-Atlantic City, PA-NJ-MD-DE marginal nonattainment area (Philadelphia Area) for the 2015 ozone national ambient air quality standards (NAAQS). This action is being taken under the Clean Air Act (CAA).

DATES: Written comments must be received on or before February 22, 2022.

ADDRESSES: Submit your comments, identified by Docket ID No. EPA–R03–OAR–2021–0854 at *https://www.regulations.gov,* or via email to *Gordon.Mike@epa.gov.* For comments submitted at *Regulations.gov,* follow the online instructions for submitting comments. Once submitted, comments cannot be edited or removed from *Regulations.gov.* For either manner of submission, EPA may publish any comment received to its public docket. Do not submit electronically any information you consider to be confidential business information (CBI) or other information whose disclosure is restricted by statute. Multimedia submissions (audio, video, etc.) must be accompanied by a written comment. The written comment is considered the official comment and should include discussion of all points you wish to make. EPA will generally not consider comments or comment contents located outside of the primary submission (*i.e.,* on the web, cloud, or other file sharing system). For additional submission methods, please contact the person identified in the **FOR FURTHER INFORMATION CONTACT** section. For the full EPA public comment policy, information about CBI or multimedia submissions, and general guidance on making effective comments, please visit *https://www.epa.gov/dockets/commenting-epa-dockets.*

FOR FURTHER INFORMATION CONTACT: Adam Yarina, Planning & Implementation Branch (3AD30), Air & Radiation Division, U.S. Environmental Protection Agency, Region III, 1650 Arch Street, Philadelphia, Pennsylvania 19103. The telephone number is (215) 814–2103. Mr. Yarina can also be reached via electronic mail at *Yarina.Adam@epa.gov.*

SUPPLEMENTARY INFORMATION: On October 9, 2020, the Delaware Department of Natural Resources and Environmental Control (DNREC) on behalf of the State of Delaware, submitted a revision to the Delaware SIP entitled, ''2017 Base Year Emissions Inventory State Implementation Plan for VOC, NO_X, and CO for Areas of Marginal Nonattainment of the 2015 Ozone NAAQS in Delaware.'' New Castle County comprises Delaware's portion of the Philadelphia-Wilmington-Atlantic City, PA-NJ-MD-DE 2015 ozone NAAQS nonattainment area. This SIP revision, referred to in this rulemaking action as the ''New Castle County base year inventory SIP,'' addresses Delaware's base year inventory requirement for the 2015 ozone NAAQS.

I. Background

On October 1, 2015, EPA strengthened the 8-hour ozone NAAQS, lowering the level of the NAAQS from 0.075 ppm parts per million (ppm) to 0.070 ppm. See 80 FR 65292 (October 26, 2015). Effective August 3, 2018, EPA designated the Philadelphia Area, which consists of New Castle County in Delaware and counties in Maryland, New Jersey, and Pennsylvania, as marginal nonattainment for the 2015 ozone NAAQS. See 83 FR 25776 (June 4, 2018). CAA section 182(a)(1) requires ozone nonattainment areas classified as marginal or above to submit a comprehensive, accurate, current inventory of actual emissions from all emissions sources in the nonattainment area, known as a ''base year inventory.'' The New Castle County base year inventory SIP addresses a base year inventory requirement for the Philadelphia Area.

II. Summary of SIP Revision and EPA Analysis

A. EPA Evaluation of the New Castle County Base Year Inventory SIP

EPA's review of Delaware's base year inventory SIP indicates that it meets the base year inventory requirements for the 2015 ozone NAAQS. As required by 40 CFR 51.1315(a), DNREC selected 2017 for the base year inventory, which is consistent with the baseline year for the RFP because it is the year of the most recent triennial inventory. DNREC included actual ozone season emissions, pursuant to 40 CFR 51.1315(c).

EPA prepared a Technical Support Document (TSD) in support of this rulemaking. In that TSD, EPA reviewed the results, procedures, and methodologies for the SIP base year, and found them to be acceptable and developed in accordance with EPA's technical guidance. The TSD is available online at *http://www.regulations.gov,* Docket ID No. EPA–R03–OAR–2021–0854.

B. Base Year Inventory Requirements

In EPA's December 6, 2018 (83 FR 62998) rulemaking, ''Implementation of the 2015 National Ambient Air Quality Standards for Ozone: Nonattainment Area State Implementation Plan Requirements,'' known as the ''SIP Requirements Rule,'' EPA set out nonattainment area requirements for the 2015 ozone NAAQS. SIP Requirements Rule established base year inventory requirement, which were codified at 40 CFR 51.1315. As per 40 CFR 51.1315(a), each 2015 ozone nonattainment area is required to submit a base year inventory within 2 years of designation (*i.e.,* no later than August 3, 2020).

Also, 40 CFR 51.1315(a) requires that the inventory year be selected consistent with the baseline year for the reasonable further progress (RFP) plan as required by 40 CFR 51.1310(b), which states that the baseline emissions inventory shall be the emissions inventory for the most recent calendar year for which a complete triennial inventory is required to be submitted to the EPA under the provisions of subpart A of 40 CFR part 51, Air Emissions Reporting Requirements, 40 CFR 51.1 through 51.50. The most recent triennial inventory year conducted for the National Emissions Inventory (NEI) pursuant to the Air Emissions Reporting Requirements (AERR) rule is 2017. See

73 FR 76539 (December 17, 2008). Delaware selected 2017 as their baseline emissions inventory year for RFP. This selection comports with EPA's implementation regulations for the 2015 ozone NAAQS because 2017 is the inventory year. 40 CFR 51.1310(b).[1]

Furthermore, 40 CFR 51.1315(c) requires emissions values included in the base year inventory to be actual ozone season day emissions as defined by 40 CFR 51.1300(q), which states that ozone season day emissions means an average day's emissions for a typical ozone season work weekday. The state shall select, subject to EPA approval, the particular month(s) in the ozone season and the day(s) in the work week to be represented, considering the conditions assumed in the development of RFP plans and/or emissions budgets for transportation conformity.

C. New Castle County Base Year Inventory SIP

The New Castle County base year inventory SIP contains an explanation of DNREC's 2017 base year emissions inventory for New Castle County (2017 New Castle County BYE) for point, non-point, and mobile anthropogenic sources within New Castle County. DNREC estimated anthropogenic emissions for nitrogen oxide (NO_X), volatile organic compound (VOC), and carbon monoxide (CO) for annual and Summer Season Weekday (SSWD) daily emissions. The 2017 New Castle County BYE contains the following source categories of anthropogenic emissions sources: Stationary point, stationary non-point, mobile non-road, and mobile on-road sources, with an explanation of the methodologies used to derive emissions summaries for each source category contained within each respective section.

1. Stationary Point Sources

Point sources are larger sources that are located at a fixed, stationary location. As defined by the AERR in 40 CFR 51.50, point sources are large, stationary (non-mobile), identifiable sources of emissions that release pollutants into the atmosphere. A point source is a facility that is a major source under 40 CFR part 70 for one or more of the pollutants for which reporting is required by 40 CFR 51.15(a)(1). These point sources can be associated with a single point or group of points in space. Examples of point source emissions categories include power plants, industrial boilers, petroleum refineries, cement plants, and other industrial plants.

As stated in Section 2 of the 2017 New Castle County BYE, point sources included large industrial (*e.g.,* manufacturing), commercial, and institutional facilities (*e.g.,* hospitals, universities, prisons, military bases, landfills, and wastewater treatment plants) within New Castle County that held either a Title V permit or a Synthetic Minor permit in 2017. DNREC explains that it used several methods of source identification. DNREC's primary data source is its permitting program, and DNREC's compliance program identifies other point sources though facility inspections and investigations. In addition, facilities are required by Delaware's emissions statement regulations, facilities are required by Delaware's emissions statement regulations, Delaware Administrative Code (DAC) 7 DE Admin. Code 1117 Source Monitoring, Record Keeping and Reporting, to certify the air emissions for the past calendar year. The certified emissions are used for inventory and planning purposes. The certified emissions are used for inventory and planning purposes.

DNREC's Division of Air Quality (DAQ) developed the point source data for the 2017 base year inventory. The point source inventory contains emissions for electric generating units (EGUs) and Non-EGU sources in the nonattainment area. EPA guidance for emissions inventory development provides that ozone season day emissions are used for the base year inventory for the nonattainment area. DAQ developed their 2017 inventory by using emissions directly reported to the agency by facilities as required by Delaware air quality regulations. These emissions are also reported to EPA, and after going through EPA's quality assurance (QA) and quality control (QC) process, are included in EPA's National Emissions Inventory (NEI). The emissions for this base year can be found in EPA's 2017 NEI.[2]

2. Stationary Non-Point Sources

Stationary non-point sources represent a large and diverse set of individual emission source categories. These sources collectively represent individual sources of emissions that have not been inventoried as either specific stationary point or mobile sources, and are typically too small, numerous, or difficult to inventory using the methods for the other classes of sources.

Stationary non-point sources that DNREC evaluated for the 2017 New Castle County BYE include solvent use (*e.g.,* dry cleaners, auto refinishing), gasoline usage and distribution (e.g., tank truck unloading and auto refueling), fuel combustion (*e.g.,* combustion of fuels in industrial, commercial, institutional, and residential furnaces, engines, boilers, wood stoves, and fireplaces), and open burning (*e.g.,* rash burning, prescribed burning, burning of land clearing debris, wildfires, building fires, and vehicle fires). Section 3.2 of the New Castle County BYE sets out the methodologies DNREC used to estimate emissions for each of these non-point source categories. These methods are consistent with the most recent EPA emission inventory guidance.

3. Non-Road Mobile Sources

Non-road mobile sources represent a large and diverse set of off-road vehicles and non-stationary equipment. As per 40 CFR 51.50, a non-road engine is an internal combustion engine (including the fuel system) that is not used in an on-road motor vehicle or a vehicle used solely for competition, or that is not affected by sections 111 or 202 of the CAA. Also defined by 40 CFR 51.50, a non-road vehicle (rather than engine) is a vehicle that is run by a non-road engine and that is not an on-road motor vehicle or a vehicle used solely for competition. Examples of non-road mobile sources include aircraft, airport ground support equipment, agricultural and construction equipment powered by an internal combustion engine, commercial marine vessels, locomotives, and lawn and garden engines and equipment.

As explained in Section 4 of the New Castle County BYE, consistent with EPA's Emission Inventory Guidance for Implementation of Ozone and Particulate Matter NAAQS and Regional Haze Regulations, DNREC used EPA's Motor Vehicle Emission Simulator (MOVES) 2014b model to develop the inventory for non-road mobile sources. MOVES2014 and later calculates emissions from both onroad and non-road mobile sources and covers non-road sources across 12 broad economic sectors (*e.g.,* construction, agriculture, industrial, lawn & garden, etc.)

[1] On January 29, 2021, the Court of Appeals for the D.C. Circuit issued its decision regarding multiple challenges to EPA's implementation rule for the 2015 ozone NAAQS which included, among other things, upholding this provision allowing states to use an alternative baseline year for RFP. *Sierra Club* v. *EPA,* 985 F.3d 1055 (D.C. Cir. 2021). The other provisions of EPA's ozone implantation rule at issue in the case are not relevant for this rulemaking.

[2] The Technical Support Document for the Base Year Inventory Submitted with the 2015 8-Hour Ozone NAAQS Marginal Area State Implementation Plan for the Philadelphia Area, included in the docket for this rulemaking available online at *https://www.regulations.gov,* Docket ID: EPA–R03–OAR–2021–0854.

classified by horsepower rating, engine type (*e.g.,* compression ignition, spark ignition) and displacement, and fuel type (*e.g.,* gasoline, diesel, compressed natural gas (CNG), and liquefied petroleum gas (LPG)).

Section 4 of the New Castle County BYE also includes aircraft, railroad locomotive, and commercial marine vessel emissions. DNREC calculated emissions from these sources by collecting data directly from surveyed sources, or activity from state and federal reporting agencies. To estimate emissions for aircraft, DNREC used airport activity statistics from the Federal Aviation Administration (FAA), landing and takeoff cycle information from the Delaware Department of Transportation (DelDOT), and survey information for landing and takeoffs, engine type, location, and usage data from airports within New Castle County. Railroad emission estimates were developed using activity and fuel consumption estimates collected from the rail companies within the state, including the Maryland & Delaware (MDDE) Railroad, Delaware Coast Line Railroad, Delmarva Central Railroad, Eastern Penn Railroad, and Wilmington and Western. For commercial marine vessels, DNREC calculated emissions for ocean-going vessels, towboats, tug-assist vessels, ferries, and vessels associated with dredging operations. Emissions were calculated based on mode of operation, vessel type, tonnage, and engine type; DNREC developed county emission allocation factors based on the location of the activity on various waterways and length of the waterway segment. These methods of calculating emissions are consistent with the most recent EPA emission inventory guidance.[3]

4. On-Road Mobile Sources

On-road mobile sources are also called ''highway mobile sources.'' These sources are the motor vehicles (*e.g.,* automobiles, buses, trucks) traveling on local and highway roads. On-road mobile source emission estimates should utilize the latest recommended on-road mobile source models; currently, that means the EPA's MOVES model for all states except California. The MOVES model estimates emissions from vehicle exhaust and from mobile source evaporative emissions, both of which must be included in the inventory. Volatile hydrocarbons evaporate from fuel systems while a vehicle is refueling, parked, or driving. Evaporative processes differ from exhaust emissions because they don't directly involve combustion, which is the main process driving exhaust emissions.

As stated in Section 5 of the New Castle County BYE, DNREC used EPA's MOVES2014b model to estimate 2017 annual emissions and 2017 SSWD daily emissions from on-road sources in New Castle County. Emissions were estimated based on emission factors and vehicle activity. Emission factors for vehicles were based on vehicle type (*e.g.,* passenger cars, passenger trucks), vehicle age, and the vehicle's operating modes. Operating modes for running, start, and idle emissions are included in MOVES. The emission factors varied over a range of conditions, including ambient air temperature, speed, traffic conditions, road types, road topography, etc. The generated emission factors were then multiplied by the appropriate vehicle miles traveled (VMT) to estimate emissions. To estimate the rate at which emissions are being generated and to calculate VMT, DNREC examined its road network, vehicle fleet, and traffic data to estimate vehicle activity. DNREC used computer models to perform emissions calculations by simulating the travel of vehicles on Delaware's roadway system.

EPA has reviewed the results, procedures, and methodologies for the SIP base year, as well as comparing the inventory with previously QA/QC'd data in EPA's 2017 NEI for any data discrepancies and found none. EPA has therefore determined that the base year inventory to be acceptable and developed in accordance with EPA's technical guidance.

5. Emissions Summary

The New Castle County BYE contains a summary of 2017 annual and ozone SSWD daily emissions by source sector, which is presented in Table 1 in this document.

TABLE 1—2017 NEW CASTLE COUNTY BASE YEAR EMISSION INVENTORY SUMMARY

Source category	Annual (tons per year)			SSWD (tons per day)		
	VOC	NO_X	CO	VOC	NO_X	CO
Stationary Point	747	2,504	1,766	3.11	14.53	10.42
Stationary Non-Point	3,387	1,444	3,527	10.63	2.76	6.76
Non-Road Mobile	2,245	3,152	23,844	7.68	9.27	92.89
On-Road Mobile	2,213	5,184	28,807	6.23	15.70	87.23
Total	8,592	12,284	57,944	27.65	42.26	197.30

III. Proposed Action

EPA's review of this material indicates the New Castle County base year inventory SIP meets the base year inventory requirement for the 2015 ozone NAAQS for Delaware's portion of the Philadelphia Area that is designated nonattainment, which consists of New Castle County, Delaware. Therefore, EPA is proposing to approve the New Castle County base year inventory SIP, which was submitted on October 9, 2020. EPA is soliciting public comments on the issues discussed in this document. These comments will be considered before taking final action.

IV. Statutory and Executive Order Reviews

Under the CAA, the Administrator is required to approve a SIP submission that complies with the provisions of the CAA and applicable Federal regulations. 42 U.S.C. 7410(k); 40 CFR 52.02(a). Thus, in reviewing SIP submissions, EPA's role is to approve state choices, provided that they meet the criteria of the CAA. Accordingly, this action merely approves state law as meeting Federal requirements and does not impose additional requirements beyond those imposed by state law. For that reason, this proposed action:

[3] Emission Inventory Guidance for Implementation of Ozone and Particulate Matter National Ambient Air Quality Standards (NAAQS) and Regional Haze Regulations, Page 130, included in the docket for this rulemaking available online at *https://www.regulations.gov,* Docket ID: EPA–R03–OAR–2021–0854.

• Is not a ''significant regulatory action'' subject to review by the Office of Management and Budget under Executive Orders 12866 (58 FR 51735, October 4, 1993) and 13563 (76 FR 3821, January 21, 2011);

• Does not impose an information collection burden under the provisions of the Paperwork Reduction Act (44 U.S.C. 3501 *et seq.*);

• Is certified as not having a significant economic impact on a substantial number of small entities under the Regulatory Flexibility Act (5 U.S.C. 601 *et seq.*);

• Does not contain any unfunded mandate or significantly or uniquely affect small governments, as described in the Unfunded Mandates Reform Act of 1995 (Pub. L. 104–4);

• Does not have federalism implications as specified in Executive Order 13132 (64 FR 43255, August 10, 1999);

• Is not an economically significant regulatory action based on health or safety risks subject to Executive Order 13045 (62 FR 19885, April 23, 1997);

• Is not a significant regulatory action subject to Executive Order 13211 (66 FR 28355, May 22, 2001);

• Is not subject to requirements of section 12(d) of the National Technology Transfer and Advancement Act of 1995 (15 U.S.C. 272 note) because application of those requirements would be inconsistent with the CAA; and

• Does not provide EPA with the discretionary authority to address, as appropriate, disproportionate human health or environmental effects, using practicable and legally permissible methods, under Executive Order 12898 (59 FR 7629, February 16, 1994).

In addition, this proposed rulemaking, proposing to approve Delaware's base year inventory SIP for the 2015 ozone NAAQS, does not have tribal implications as specified by Executive Order 13175 (65 FR 67249, November 9, 2000), because the SIP is not approved to apply in Indian country located in the State, and EPA notes that it will not impose substantial direct costs on tribal governments or preempt tribal law.

List of Subjects in 40 CFR Part 52

Environmental protection, Air pollution control, Carbon monoxide, Incorporation by reference, Intergovernmental relations, Nitrogen oxides, Ozone, Reporting and recordkeeping requirements, Volatile organic compounds.

Dated: January 3, 2022.

Diana Esher,

Acting Regional Administrator, Region III.

[FR Doc. 2022–00248 Filed 1–20–22; 8:45 am]

BILLING CODE 6560–50–P

DEPARTMENT OF COMMERCE

National Oceanic and Atmospheric Administration

50 CFR Part 217

[Docket No. 220113–0013]

RIN 0648–BK97

Taking and Importing Marine Mammals; Taking Marine Mammals Incidental to Russian River Estuary Management Activities

AGENCY: National Marine Fisheries Service (NMFS), National Oceanic and Atmospheric Administration (NOAA), Commerce.

ACTION: Proposed rule; request for comments.

SUMMARY: NMFS has received a request from the Sonoma County Water Agency (SCWA) for authorization to take marine mammals incidental to Russian River estuary management activities in Sonoma County, California, over the course of five years (2022–2027). As required by the Marine Mammal Protection Act (MMPA), NMFS is proposing regulations to govern that take and requests comments on the proposed regulations.

DATES: Comments and information must be received no later than February 22, 2022.

ADDRESSES: Submit all electronic public comments via the Federal e-Rulemaking Portal. Go to *www.regulations.gov* and enter NOAA–NMFS–2021–0124 in the Search box. Click on the ''Comment'' icon, complete the required fields, and enter or attach your comments.

Instructions: Comments sent by any other method, to any other address or individual, or received after the end of the comment period, may not be considered by NMFS. All comments received are a part of the public record and will generally be posted for public viewing on *www.regulations.gov* without change. All personal identifying information (*e.g.,* name, address), confidential business information, or otherwise sensitive information submitted voluntarily by the sender will be publicly accessible. NMFS will accept anonymous comments (enter ''N/A'' in the required fields if you wish to remain anonymous). Attachments to electronic comments will be accepted in Microsoft Word, Excel, or Adobe PDF file formats only.

FOR FURTHER INFORMATION CONTACT: Ben Laws, Office of Protected Resources, NMFS, (301) 427–8401.

SUPPLEMENTARY INFORMATION:

Availability

A copy of SCWA's application and any supporting documents, as well as a list of the references cited in this document, may be obtained online at: *www.fisheries.noaa.gov/national/marine-mammal-protection/incidental-take-authorizations-construction-activities.* In case of problems accessing these documents, please call the contact listed above (see **FOR FURTHER INFORMATION CONTACT**).

Purpose and Need for Regulatory Action

We received an application from SCWA requesting 5-year regulations and authorization to take multiple species of marine mammals. This proposed rule would establish a framework under the authority of the MMPA (16 U.S.C. 1361 *et seq.*) to allow for the authorization of take by Level B harassment of marine mammals incidental to SCWA's estuary management activities at the mouth of the Russian River in Sonoma County, CA. Please see ''Background'' below for definitions of harassment.

Legal Authority for the Proposed Action

Section 101(a)(5)(A) of the MMPA (16 U.S.C. 1371(a)(5)(A)) directs the Secretary of Commerce to allow, upon request, the incidental, but not intentional taking of small numbers of marine mammals by U.S. citizens who engage in a specified activity (other than commercial fishing) within a specified geographical region for up to five years if, after notice and public comment, the agency makes certain findings and issues regulations that set forth permissible methods of taking pursuant to that activity and other means of effecting the ''least practicable adverse impact'' on the affected species or stocks and their habitat (see the discussion below in the Proposed Mitigation section), as well as monitoring and reporting requirements. Section 101(a)(5)(A) of the MMPA and the implementing regulations at 50 CFR part 216, subpart I provide the legal basis for issuing this proposed rule containing five-year regulations, and for any subsequent LOAs. As directed by this legal authority, this proposed rule contains mitigation, monitoring, and reporting requirements.

Summary of Major Provisions Within the Proposed Rule

Following is a summary of the major provisions of this proposed rule regarding SCWA's estuary management activities. These measures include:

- Measures to minimize the number and intensity of incidental takes during sensitive times of year and to minimize the duration of disturbances.
- Measures designed to eliminate startling reactions.
- Eliminating or altering management activities on the beach when pups are present, and by setting limits on the frequency and duration of events during pupping season.

Background

The MMPA prohibits the ''take'' of marine mammals, with certain exceptions. Sections 101(a)(5)(A) and (D) of the MMPA (16 U.S.C. 1361 *et seq.*) direct the Secretary of Commerce (as delegated to NMFS) to allow, upon request, the incidental, but not intentional, taking of small numbers of marine mammals by U.S. citizens who engage in a specified activity (other than commercial fishing) within a specified geographical region if certain findings are made and either regulations are issued or, if the taking is limited to harassment, a notice of a proposed incidental take authorization may be provided to the public for review.

Authorization for incidental takings shall be granted if NMFS finds that the taking will have a negligible impact on the species or stock(s) and will not have an unmitigable adverse impact on the availability of the species or stock(s) for taking for subsistence uses (where relevant). Further, NMFS must prescribe the permissible methods of taking and other ''means of effecting the least practicable adverse impact'' on the affected species or stocks and their habitat, paying particular attention to rookeries, mating grounds, and areas of similar significance, and on the availability of the species or stocks for taking for certain subsistence uses (referred to as ''mitigation''); and requirements pertaining to the mitigation, monitoring and reporting of the takings are set forth. The definitions of all applicable MMPA statutory terms cited above are included in the relevant sections below.

National Environmental Policy Act

To comply with the National Environmental Policy Act of 1969 (NEPA; 42 U.S.C. 4321 *et seq.*) and NOAA Administrative Order (NAO) 216–6A, NMFS must evaluate our proposed action (*i.e.,* the promulgation of regulations and subsequent issuance of incidental take authorization) and alternatives with respect to potential impacts on the human environment.

This action is consistent with categories of activities identified in Categorical Exclusion B4 of the Companion Manual for NAO 216–6A, which do not individually or cumulatively have the potential for significant impacts on the quality of the human environment and for which we have not identified any extraordinary circumstances that would preclude this categorical exclusion. Accordingly, NMFS has preliminarily determined that the proposed action qualifies to be categorically excluded from further NEPA review.

Information in SCWA's application and this notice collectively provide the environmental information related to proposed issuance of these regulations and subsequent incidental take authorization for public review and comment. We will review all comments submitted in response to this notice prior to concluding our NEPA process or making a final decision on the request for incidental take authorization.

Summary of Request

On September 2, 2021, we received an adequate and complete request from SCWA for authorization to take marine mammals incidental to estuary management activities. SCWA provided a final version of the application incorporating minor corrections on September 22, 2021. On September 29, 2021 (86 FR 53950), we published a notice of receipt of SCWA's application in the **Federal Register**, requesting comments and information related to the request for 30 days. We received one supportive comment from a private citizen.

SCWA proposes to manage the naturally-formed barrier beach at the mouth of the Russian River in order to minimize potential for flooding adjacent to the estuary and to enhance habitat for juvenile salmonids, as well as to conduct biological and physical monitoring of the barrier beach and estuary. Flood control-related breaching of the barrier beach at the mouth of the river may include artificial breaches, as well as construction and maintenance of a lagoon outlet channel. The latter activity, an alternative management technique conducted to mitigate impacts of flood control on rearing habitat for Endangered Species Act (ESA)-listed salmonids, occurs only from May 15 through October 15 (hereafter, the ''lagoon management period''). Artificial breaching and monitoring activities may occur at any time during the period of validity of the proposed regulations. The requested regulations would be valid for 5 years, from April 21, 2022, through April 20, 2027.

Breaching of the naturally-formed barrier beach at the mouth of the Russian River requires the use of heavy equipment (*e.g.,* bulldozer, excavator) and increased human presence, and monitoring in the estuary requires the use of small boats. As a result, pinnipeds hauled out on the beach or at peripheral haul-outs in the estuary may exhibit behavioral responses that indicate incidental take by Level B harassment under the MMPA. Species known from the haul-out at the mouth of the Russian River or from peripheral haul-outs, and therefore anticipated to be taken incidental to the specified activity, include the harbor seal (*Phoca vitulina*), California sea lion (*Zalophus californianus*), and northern elephant seal (*Mirounga angustirostris*).

This request for incidental take regulations (ITR) and a subsequent Letter of Authorization (LOA) follows issuance of previous 5-year ITR (2017–2022) (82 FR 13765; March 15, 2017). Prior to issuance of that initial ITR, NMFS issued seven consecutive incidental harassment authorizations (IHA) to SCWA for incidental take associated with the same ongoing activities, between 2010–2016.

Description of the Specified Activity

Overview

The proposed action involves management of the estuary to prevent flooding while preventing adverse modification to critical habitat for ESA-listed salmonids. Requirements related to the ESA are described in further detail below. During the lagoon management period, this involves construction and maintenance of a lagoon outlet channel that would facilitate formation of a perched lagoon. A perched lagoon, which is an estuary closed to tidal influence in which water surface elevation is above mean high tide, would reduce flooding while maintaining beneficial conditions for juvenile salmonids. Additional breaches of the barrier beach may be conducted for the sole purpose of reducing flood risk. SCWA's proposed activity was described in detail in our notice of proposed authorization prior to the 2011 IHA (76 FR 14924; March 18, 2011). SCWA's estuary management activities have not changed (aside from minor changes to SCWA's biological and physical estuary monitoring measures);

please see that document for a detailed description.

Dates and Duration

The specified activity may occur at any time during the five-year period of validity for these proposed regulations (2022–2027), although construction and maintenance of a lagoon outlet channel would occur only during the lagoon management period. In addition, there are certain restrictions placed on SCWA during the harbor seal pupping season. These, as well as periodicity and frequency of the specified activities, are described in further detail below.

Specified Geographical Region

The estuary is located about 97 kilometers (km) (60 miles (mi)) northwest of San Francisco in Sonoma County, near Jenner, California (see Figure 1 of SCWA's application). The Russian River watershed encompasses 3,847 km^2 (1,485 mi^2) in Sonoma, Mendocino, and Lake Counties. The mouth of the Russian River is located at Goat Rock State Beach (see Figure 2 of SCWA's application); the estuary extends from the mouth upstream approximately 10 to 11 km (6–7 mi) between Austin Creek and the community of Duncans Mills (Heckel and McIver, 1994).

Detailed Description of Activities

Within the Russian River watershed, the U.S. Army Corps of Engineers (Corps), SCWA, and the Mendocino County Russian River Flood Control and Water Conservation Improvement District (District) operate and maintain Federal facilities and conduct activities in addition to the estuary management, including flood control, water diversion and storage, instream flow releases, hydroelectric power generation, channel maintenance, and fish hatchery production. The Corps, SCWA, and the District conducted these activities for many years before salmonid species in the Russian River were protected under the ESA. Upon determination that these actions were likely to affect ESA-listed salmonids, as well as designated critical habitat for these species, formal consultation under section 7 of the ESA was initiated. In 2008, NMFS issued a Biological Opinion (BiOp) for Water Supply, Flood Control Operations, and Channel Maintenance conducted by the Corps, SCWA, and the District in the Russian River watershed (NMFS, 2008). This BiOp found that the activities—including SCWA's estuary management activities—authorized by the Corps and undertaken by SCWA and the District, if continued in a manner similar to recent historic practices, were likely to jeopardize the continued existence of ESA-listed salmonids and were likely to adversely modify critical habitat.

If a project is found to jeopardize a species or adversely modify its critical habitat, NMFS must develop and recommend a non-jeopardizing Reasonable and Prudent Alternative (RPA) to the proposed project, in coordination with the federal action agency and any applicant. A component of the RPA described in the 2008 BiOp requires SCWA to collaborate with NMFS and modify their estuary water level management in order to reduce marine influence (*i.e.,* high salinity and tidal inflow) and promote a higher water surface elevation in the estuary in order to enhance the quality of rearing habitat for juvenile salmonids. A program of potential incremental steps prescribed to reach that goal includes adaptive management of the outlet channel. SCWA is also required to monitor the response of water quality, invertebrate production, and salmonids in and near the estuary to water surface elevation management in the estuary-lagoon system.

The analysis contained in the BiOp found that maintenance of lagoon conditions was necessary only for the lagoon management period. See NMFS' BiOp (2008) for details of that analysis. As a result of that determination, there are three components to SCWA's estuary management activities: (1) Lagoon outlet channel management, during the lagoon management period only, required to accomplish the dual purposes of flood risk abatement and maintenance of juvenile salmonid habitat; (2) traditional artificial breaching, with the sole goal of flood risk abatement; and (3) physical and biological monitoring. Monitoring is conducted to measure changes in the beach and channel elevation, lengths, and widths, as well as flow velocities and observations of the bed structure in the channel. SCWA is also required through the BiOp to collect biological, water quality, and physical habitat data in conjunction with estuary management. These monitoring activities include fisheries sampling, water quality monitoring, invertebrate sampling, and physical habitat measurements requiring the use of boats in the estuary. Please see the previously referenced **Federal Register** notice (76 FR 14924; March 18, 2011) for detailed discussion of lagoon outlet channel management, artificial breaching, and other monitoring activities. Please see Table 3 for more details regarding the specific activities.

NMFS' BiOp determined that salmonid estuarine habitat may be improved by managing the Russian River estuary as a perched, freshwater lagoon and, therefore, stipulates as an RPA to existing conditions that the estuary be managed to achieve such conditions between May 15th and October 15th. In recognition of the complexity and uncertainty inherent in attempting to manage conditions in a dynamic beach environment, the BiOp stipulates that the estuarine water surface elevation RPA be managed adaptively, meaning that it should be planned, implemented, and then iteratively refined based on experience gained from implementation.

The estuary closes throughout the year as a result of a sandbar forming at the mouth of the Russian River. To facilitate summer lagoon management, SCWA would construct the lagoon outlet channel after the first natural barrier beach closure, but the lagoon would generally be managed during the lagoon management period. It is anticipated that the outlet channel implementation would be a 2-day event with initial construction of the lagoon outlet channel taking one day of work, and subsequent adjustments to the outlet channel on the second day. Subsequent maintenance would occur approximately weekly until the end of the lagoon management period. Artificial breaching activities would generally occur at any time of year outside the lagoon management period. Biological and physical habitat monitoring can occur at any time of year, but generally occurs from mid-April through December, with the exception of topographic beach surveys that occur year round.

Description of Marine Mammals in the Area of the Specified Activity

Harbor seals are the most common species inhabiting the haul-out at the mouth of the Russian River (Jenner haul-out) and fine-scale local abundance data for harbor seals have been recorded extensively since 1972. California sea lions and northern elephant seals have also been observed infrequently in the project area. In addition to the primary Jenner haul-out, there are eight peripheral haul-outs nearby (see Figure 1 of SCWA's application). These include North Jenner and Odin Cove to the north; Pocked Rock, Kabemali, and Rock Point to the south; and Penny Logs, Patty's Rock, and Chalanchawi upstream within the estuary.

This section provides summary information regarding local occurrence of these species. We have reviewed SCWA's detailed species descriptions, including life history information, for accuracy and completeness and refer the

reader to Sections 3 and 4 of SCWA's application instead of reprinting the information here. Please also see NMFS Stock Assessment Reports, which may be accessed online at *www.fisheries.noaa.gov/national/marine-mammal-protection/marine-mammal-stock-assessments.*

Harbor Seals

Harbor seals inhabit coastal and estuarine waters and shoreline areas of the Northern Hemisphere from temperate to polar regions. The eastern North Pacific subspecies is found from Baja California north to the Aleutian Islands and into the Bering Sea. Multiple lines of evidence support the existence of geographic structure among harbor seal populations from California to Alaska (Carretta *et al.,* 2016). However, because stock boundaries are difficult to meaningfully draw from a biological perspective, three separate harbor seal stocks are recognized for management purposes along the west coast of the continental U.S.: (1) Inland waters of Washington, (2) outer coast of Oregon and Washington, and (3) California (Carretta *et al.,* 2016). Placement of a stock boundary at the California-Oregon border is not based on biology but is considered a political and jurisdictional convenience (Carretta *et al.,* 2016). In addition, harbor seals may occur in Mexican waters, but these animals are not considered part of the California stock. Only the California stock is expected to be found in the project area.

California harbor seals are not protected under the ESA or listed as depleted under the MMPA, and are not considered a strategic stock under the MMPA because annual human-caused mortality (43) is significantly less than the calculated potential biological removal (PBR; 1,641) (Carretta *et al.,* 2016). The population appears to be stabilizing at what may be its carrying capacity and the fishery mortality is declining. The best abundance estimate of the California stock of harbor seals is 30,968 and the minimum population size of this stock is 27,348 individuals (Carretta *et al.,* 2016).

Harbor seal pupping normally occurs at the Russian River beginning in March and continuing into May, and pups are counted during surveys through June, after which time it becomes difficult to distinguish pups from sub-adult seals. The Jenner haul-out is the largest in Sonoma County. A substantial amount of monitoring effort has been conducted at the Jenner haul-out and surrounding areas. Concerned local residents formed the Stewards' Seal Watch Public Education Program in 1985 to educate beach visitors and monitor seal populations. State Parks Volunteer Docents continue this effort towards safeguarding local harbor seal habitat. On weekends during the pupping and molting season (approximately March–August), volunteers conduct public outreach and record the numbers of visitors and seals on the beach, other marine mammals observed, and the number of boats and kayaks present.

Ongoing monthly seal counts at the Jenner haul-out were begun by J. Mortenson in January 1987, with additional nearby haul-outs added to the counts thereafter. In addition, local resident E. Twohy began daily observations of seals and people at the Jenner haul-out in November 1989. These datasets note whether the mouth at the Jenner haul-out was opened or closed at each observation, as well as various other daily and annual patterns of haul-out usage (Mortenson and Twohy, 1994). In 2009, SCWA began regular baseline monitoring of the haul-out as a component of its estuary management activity.

The number of harbor seals at the Russian River varies throughout the year, with peak seal abundance typically during the summer molting period (Figure 4). Abundance of seals on the Jenner haul-out declines in the fall after the molting season is complete, but seals are present at Jenner and locally year round. The number of harbor seals at this haul-out has fluctuated from year to year. See Figures 4 and 5 in SCWA's application for additional detail.

The number of seals present at the Jenner haul-out generally declines during bar-closed conditions (Mortenson, 1996). SCWA's pinniped monitoring efforts from 1996 to 2000 focused on artificial breaching activities and their effects on the Jenner haul-out. Seal counts and disturbances were recorded from one to two days prior to breaching, the day of breaching, and the day after breaching (MSC, 1997, 1998, 1999, 2000; SCWA and MSC, 2001). In each year, the trend observed was that harbor seal numbers generally declined during a beach closure and increased the day following an artificial breaching event. Heckel and McIver (1994) speculated that the loss of easy access to the haul-out and ready escape to the sea during bar-closed conditions may account for the lower numbers. SCWA's pinniped monitoring program since 2009 has included observations from water level management activities (*i.e.,* artificial breaching and lagoon outlet channel implementation) and its effects on the Jenner haul-out. Seal counts and disturbances were recorded from 1 to 2 days prior to a breaching or channel implementation event, the day of an event, and the day after an event. During most events the trend observed was that harbor seal numbers declined during a beach closure (occasionally, the numbers rose again and then declined again during a closure) and increased the day following an artificial breaching event. For more information, see SCWA's monitoring reports (available online at: *www.fisheries.noaa.gov/action/incidental-take-authorization-sonoma-county-water-agencys-estuary-management-activities*).

Mortenson (1996) observed that pups were first seen at the Jenner haul-out in late March, with maximum counts in May. In this study, pups were not counted separately from other age classes at the haul-out after August due to the difficulty in discriminating pups from small yearlings. From 1989 to 1991, Hanson (1993) observed that pupping began at the Jenner haul-out in mid-April, with a maximum number of pups observed during the first two weeks of May. This corresponds with the peaks observed at Point Reyes, where the first viable pups are born in March and the peak is the last week of April to early May (SCWA, 2014). Based on this information, pupping season at the Jenner haul-out is conservatively defined here as March 15 to June 30.

California Sea Lions

California sea lions range from the Gulf of California north to the Gulf of Alaska, with breeding areas located in the Gulf of California, western Baja California, and southern California. Five genetically distinct geographic populations have been identified: (1) Pacific Temperate, (2) Pacific Subtropical, (3) Southern Gulf of California, (4) Central Gulf of California and (5) Northern Gulf of California (Schramm *et al.,* 2009). Rookeries for the Pacific Temperate population are found within U.S. waters and just south of the U.S.-Mexico border, and animals belonging to this population may be found from the Gulf of Alaska to Mexican waters off Baja California. Animals belonging to other populations (*e.g.,* Pacific Subtropical) may range into U.S. waters during non-breeding periods. For management purposes, a stock of California sea lions comprising those animals at rookeries within the U.S. is defined (*i.e.,* the U.S. stock of California sea lions) (Carretta *et al.,* 2019). Pup production at the Coronado Islands rookery in Mexican waters is considered an insignificant contribution to the overall size of the Pacific Temperate population (Lowry and Maravilla-Chavez, 2005).

California sea lions are not protected under the ESA or listed as depleted under the MMPA. Total annual human-caused mortality (≥321) is substantially less than the PBR (estimated at 14,011); therefore, California sea lions are not considered a strategic stock under the MMPA. The best abundance estimate of the U.S. stock of California sea lions is 257,606 and the minimum population size of this stock is 233,515 individuals (Carretta *et al.,* 2019).

Solitary California sea lions have occasionally been observed at or in the vicinity of the Russian River estuary (MSC, 1999, 2000), in all months of the year except June. Male California sea lions are occasionally observed hauled out at or near the Russian River mouth in most years, including 2016–2018 and 2020. Other individuals were observed in the surf at the mouth of the river or swimming inside the estuary. Juvenile sea lions have also been observed during monitoring of peripheral haul-outs. The occurrence of individual California sea lions in the action area may occur year-round, but is infrequent and sporadic.

Northern Elephant Seals

Northern elephant seals gather at breeding areas, located primarily on offshore islands of Baja California and California, from approximately December to March before dispersing for feeding. Males feed near the eastern Aleutian Islands and in the Gulf of Alaska, while females feed at sea south of 45° N (Stewart and Huber, 1993; Le Boeuf *et al.,* 1993). Adults then return to land between March and August to molt, with males returning later than females, before dispersing again to their respective feeding areas between molting and the winter breeding season. Populations of northern elephant seals in the U.S. and Mexico are derived from a few tens or hundreds of individuals surviving in Mexico after being nearly hunted to extinction (Stewart *et al.,* 1994). Given the recent derivation of most rookeries, no genetic differentiation would be expected. Although movement and genetic exchange continues between rookeries, most elephant seals return to their natal rookeries when they start breeding (Huber *et al.,* 1991). The California breeding population is now demographically isolated from the Baja California population and is considered to be a separate stock.

Northern elephant seals are not protected under the ESA or listed as depleted under the MMPA. Total annual human-caused mortality (5.3) is substantially less than the PBR (estimated at 5,122); therefore, northern elephant seals are not considered a strategic stock under the MMPA. The best abundance estimate of the California breeding population of northern elephant seals is 187,386 and the minimum population size of this stock is 85,369 individuals (Carretta *et al.,* 2021).

Censuses of pinnipeds at the mouth of the Russian River have been taken at least semi-monthly since 1987. Elephant seals were noted from 1987–95, with one or two elephant seals typically counted during May censuses, and occasional records during the fall and winter (Mortenson and Follis, 1997). A single, tagged northern elephant seal sub-adult was present at the Jenner haul-out from 2002–07. This individual seal, which was observed harassing harbor seals also present at the haul-out, was generally present during molt and again from late December through March. In recent years individual sub-adult elephant seals have been observed on a few occasions hauled out at the Russian River in the late summer and early fall. The occurrence of individual northern elephant seals in the action area has generally been infrequent and sporadic.

Potential Effects of the Specified Activity on Marine Mammals and Their Habitat

This section includes a summary and discussion of the ways that components of the specified activity may impact marine mammals and their habitat. The Estimated Take section later in this document will include a quantitative analysis of the number of incidents of take expected to occur incidental to this activity. The Negligible Impact Analysis and Determination section will include an analysis of how this specific activity will impact marine mammals and will consider the content of this section, the Estimated Take section, and the Proposed Mitigation section, to draw conclusions regarding the likely impacts of these activities on the reproductive success or survivorship of individuals and from that on the affected marine mammal populations or stocks.

A significant body of monitoring data exists for pinnipeds at the mouth of the Russian River. In addition, pinnipeds have co-existed with regular estuary management activity for decades, as well as with regular human use activity at the beach, and are likely habituated to human presence and activity. Nevertheless, SCWA's estuary management activities have the potential to disturb pinnipeds present on the beach or at peripheral haul-outs in the estuary. During breaching operations, past monitoring has revealed that some or all of the seals present typically move or flush from the beach in response to the presence of crew and equipment, though some may remain hauled-out. No stampeding of seals—a potentially dangerous occurrence in which large numbers of animals succumb to mass panic and rush away from a stimulus—has been documented since SCWA developed protocols to prevent such events in 1999. While it is likely impossible to conduct required estuary management activities without provoking some response in hauled-out animals, precautionary mitigation measures, described later in this document, ensure that animals are gradually apprised of human approach. Under these conditions, seals typically exhibit a continuum of responses, beginning with alert movements (*e.g.,* raising the head), which may then escalate to movement away from the stimulus and possible flushing into the water. Flushed seals typically re-occupy the haul-out within minutes to hours of the stimulus.

In the absence of appropriate mitigation measures, it is possible that pinnipeds could be subject to injury, serious injury, or mortality, likely through stampeding or abandonment of pups. However, based on a significant body of site-specific data, harbor seals are unlikely to sustain any harassment that may be considered biologically significant. Individual animals would, at most, flush into the water in response to maintenance activities but may also simply become alert or move across the beach away from equipment and crews. SCWA has observed that harbor seals are generally less likely to flush from the beach when the primary aggregation of seals is north of the breaching activity (please refer to Figure 2 of SCWA's application), meaning that personnel and equipment are not required to pass the seals.

California sea lions and northern elephant seals have been observed as less sensitive to stimulus than harbor seals during monitoring at numerous other sites. For example, monitoring of pinniped disturbance as a result of abalone research in the Channel Islands showed that while harbor seals flushed at a rate of 69 percent, California sea lions flushed at a rate of only 21 percent. The rate for elephant seals declined to 0.1 percent (VanBlaricom, 2010). In the event that either of these species is present during management activities, they would be expected to display a minimal reaction to maintenance activities—less than that expected of harbor seals.

Although the Jenner haul-out is not known as a primary pupping beach,

pups have been observed during the pupping season; therefore, we have evaluated the potential for injury, serious injury, or mortality to pups. There is a lack of published data regarding pupping at the mouth of the Russian River, but SCWA monitors have observed pups on the beach. No births were observed during recent monitoring, but may be inferred based on signs indicating pupping (*e.g.,* blood spots on the sand, birds consuming possible placental remains). Pup injury or mortality would be most likely to occur in the event of extended separation of a mother and pup, or trampling in a stampede. As discussed previously, no stampedes have been recorded since development of appropriate protocols in 1999. Any California sea lions or northern elephant seals present would be independent juveniles or adults; therefore, analysis of impacts on pups is not relevant for those species.

Similarly, the period of mother-pup bonding, critical time needed to ensure pup survival and maximize pup health, is not expected to be impacted by estuary management activities. Harbor seal pups are extremely precocious, swimming and diving immediately after birth and throughout the lactation period, unlike most other phocids which normally enter the sea only after weaning (Lawson and Renouf, 1985; Cottrell *et al.,* 2002; Burns *et al.,* 2005). Lawson and Renouf (1987) investigated harbor seal mother-pup bonding in response to natural and anthropogenic disturbance. In summary, they found that the most critical bonding time is within minutes after birth. As described previously, the peak of pupping season is typically concluded by mid-May, when the lagoon management period begins. As such, it is expected that mother-pup bonding would likely be concluded as well. The number of management events during the months of March and April has been relatively low in the past, and the breaching activities occur in a single day over several hours. In addition, mitigation measures described later in this document further reduce the likelihood of any impacts to pups, whether through injury or mortality or interruption of mother-pup bonding (which may lead to abandonment).

In summary, and based on extensive monitoring data, we believe that impacts to hauled-out pinnipeds during estuary management activities would be behavioral harassment of limited duration (*i.e.,* less than one day) and limited intensity (*i.e.,* temporary flushing at most). Stampeding, and therefore injury or mortality, is not expected—nor been documented—in the years since appropriate protocols were established (see Proposed Mitigation for more details). Further, the continued, and increasingly heavy (see SCWA's monitoring reports), use of the haul-out despite decades of breaching events indicates that abandonment of the haul-out is unlikely.

Anticipated Effects on Marine Mammal Habitat

The purposes of the estuary management activities are to improve summer rearing habitat for juvenile salmonids in the Russian River estuary and/or to minimize potential flood risk to properties adjacent to the estuary. These activities would result in temporary physical alteration of the Jenner haul-out, but are essential to conserving and recovering endangered salmonid species, as prescribed by the BiOp. These salmonids are themselves prey for pinnipeds. In addition, with barrier beach closure, seal usage of the beach haul-out declines, and the three nearby river haul-outs may not be available for usage due to rising water surface elevations. Breaching of the barrier beach, subsequent to the temporary habitat disturbance, likely increases suitability and availability of habitat for pinnipeds. Biological and water quality monitoring would not physically alter pinniped habitat. Please see the previously referenced **Federal Register** notice (76 FR 14924; March 18, 2011) for a more detailed discussion of anticipated effects on habitat.

During SCWA's pinniped monitoring associated with artificial breaching activities from 1996 to 2000, the number of harbor seals hauled out declined when the barrier beach closed and then increased the day following an artificial breaching event (MSC, 1997, 1998, 1999, and 2000; SCWA and MSC, 2001). This response to barrier beach closure followed by artificial breaching has remained consistent in recent years and is anticipated to continue. However, it is possible that the number of pinnipeds using the haul-out could decline during the extended lagoon management period, when SCWA would seek to maintain a shallow outlet channel rather than the deeper channel associated with artificial breaching. Collection of baseline information during the lagoon management period is included in the monitoring requirements described later in this document. SCWA's previous monitoring indicates that the number of seals at the haul-out declines from August to October, so management of the lagoon outlet channel (and managing the sandbar as a summer lagoon) would have little effect on haul-out use during the latter portion of the lagoon management period. The early portion of the lagoon management period coincides with the pupping season. Past monitoring during this period, which represents some of the longest beach closures in the late spring and early summer months, shows that the number of pinnipeds at the haul-out tends to fluctuate, rather than showing the more straightforward declines and increases associated with closures and openings seen at other times of year (MSC, 1998). This may indicate that seal haul-out usage during the pupping season is less dependent on bar status. As such, the number of seals hauled out from May through July would be expected to fluctuate but is unlikely to respond dramatically to the absence of artificial breaching events. Regardless, any impacts to habitat resulting from SCWA's management of the estuary during the lagoon management period are not in relation to natural conditions but, rather, in relation to conditions resulting from SCWA's discontinued approach of artificial breaching during this period.

In summary, there will be temporary physical alteration of the beach. However, natural opening and closure of the beach results in the same impacts to habitat. Therefore, seals are likely adapted to this cycle. In addition, the increase in rearing habitat quality has the goal of increasing salmonid abundance, ultimately providing more food for seals present within the action area. Thus, any impacts to marine mammal habitat are not expected to cause significant or long-term consequences for individual marine mammals or their populations.

Estimated Take

This section provides an estimate of the number of incidental takes proposed for authorization, which will inform both NMFS's consideration of whether the number of takes is ''small'' and the negligible impact determination.

Except with respect to certain activities not pertinent here, section 3(18) of the MMPA defines ''harassment'' as: Any act of pursuit, torment, or annoyance which (i) has the potential to injure a marine mammal or marine mammal stock in the wild (Level A harassment); or (ii) has the potential to disturb a marine mammal or marine mammal stock in the wild by causing disruption of behavioral patterns, including, but not limited to, migration, breathing, nursing, breeding, feeding, or sheltering (Level B harassment).

SCWA has requested, and NMFS proposes, authorization to take harbor seals, California sea lions, and northern

elephant seals, by Level B harassment only, incidental to estuary management activities. These activities, involving increased human presence and the use of heavy equipment and support vehicles, are expected to harass pinnipeds present at the haul-out through disturbance only. In addition, monitoring activities prescribed in the BiOp may harass additional animals at the Jenner haul-out and at the three haul-outs located in the estuary (Penny Logs, Patty's Rock, and Chalanchawi). Estimates of the number of harbor seals that may be harassed by the proposed management activities are based upon the number of potential take events associated with lagoon outlet channel and artificial breaching activities (Table 3) and the average number of harbor seals that are present at the Jenner haul-out during bar-closed conditions (Table 2). Table 3 details the total number of estimated takes for harbor seals.

Events associated with lagoon outlet channel management would occur only during the lagoon management period and are split into two categories: (1) Initial channel implementation, which would likely occur between May and September; and (2) maintenance and monitoring of the outlet channel, which would continue until October 15. In addition, it is possible that the initial outlet channel could close through natural processes, requiring additional channel implementation events. Based on past experience, SCWA estimates that a maximum of three outlet channel implementation events could be required, with each event lasting up to two days. Outlet channel implementation events would only occur when the bar is closed. Therefore, it is appropriate to use data from bar-closed monitoring events in estimating take (Table 2). Construction of the outlet channel is designed to produce a perched outflow, resulting in conditions that more closely resemble bar-closed than bar-open with regard to pinniped haul-out usage. As such, bar-closed data is appropriate for estimating take during all lagoon management period maintenance and monitoring activity. As dates of outlet channel implementation cannot be known in advance, the highest daily average of seals per month during the lagoon management period—the May average for 2010–20—is used in estimating take. For maintenance and monitoring activities associated with the lagoon outlet channel, which would occur on a weekly basis following implementation of the outlet channel, the average number of harbor seals for each month during bar-closed conditions was used.

Artificial breaching activities would also occur during bar-closed conditions, and the average number of harbor seals for each month during bar-closed conditions was used (Table 2). The number of estimated artificial breaching events is informed by experience. For those months with more frequent historical bar closure events, we assume that two such events could occur in any given year. For other months, we assume that only one such event would occur in a given year. The average total number of events from 2000–2020 is 5 per year, meaning that the estimated take numbers for artificial breaching are conservative. Please see Table 1 in SCWA's application for more information.

For monthly topographic surveys on the barrier beach, potential incidental take of harbor seals is typically calculated as one hundred percent of the seals expected to be encountered. The exception is during the month of April, when surveyors would avoid seals to reduce harassment of pups and/or mothers with neonates. For the monthly topographic survey during April, surveyors would not approach or retreat slowly away from the haul-out when neonates are present, typically resulting in no disturbance. For that survey, the assumption is therefore that only ten percent of seals present would be harassed. The number of seals expected to be encountered is based on the overall average monthly number of seals hauled out as recorded during baseline surveys conducted by SCWA in 2010–20 (Table 2).

TABLE 2—AVERAGE NUMBER OF HARBOR SEALS OBSERVED BY MONTH AND RIVER MOUTH CONDITION, 2010–2020

	Jan	Feb	Mar	Apr	May	Jun	Jul	Aug	Sep	Oct	Nov	Dec
Closed	57	88	133	99	118	113	105	44	24	25	26	54
Open	121	148	138	165	151	197	260	107	56	59	88	90
Overall	106	143	138	159	149	178	227	100	49	38	62	79

For biological and physical habitat monitoring activities in the estuary, it was assumed that pinnipeds may be encountered once per event and flush from a river haul-out. The potential for harassment associated with these events is limited to the peripheral haul-outs located in the estuary. In past experience, SCWA typically sees no more than a single harbor seal at these haul-outs, which consist of scattered logs and rocks that often submerge at high tide.

As described previously, California sea lions and northern elephant seals are occasional visitors to the estuary. Based on limited information regarding occurrence of these species at the mouth of the Russian River estuary, we assume there is the potential to encounter one animal of each species per month throughout the year. Lagoon outlet channel activities could potentially occur over six months of the year, artificial breaching activities over eight months, topographic surveys year-round, and biological and physical monitoring in the estuary over eight months. Therefore, we assume that up to 34 incidents of take could occur per year for both the California sea lion and northern elephant seal. Based on past occurrence records, the proposed take authorization for these two species is likely a precautionary overestimate.

TABLE 3—ESTIMATED NUMBER OF HARBOR SEAL TAKES RESULTING FROM RUSSIAN RIVER ESTUARY MANAGEMENT ACTIVITIES

Number of animals expected to occur [a]	Number of events [b c d]	Potential total number of individual animals that may be taken
Lagoon Outlet Channel Management (May 15 to October 15)		
Implementation: 118 [e]	Implementation: 3	Implementation: 708.

TABLE 3—ESTIMATED NUMBER OF HARBOR SEAL TAKES RESULTING FROM RUSSIAN RIVER ESTUARY MANAGEMENT ACTIVITIES—Continued

Number of animals expected to occur [a]	Number of events [b c d]	Potential total number of individual animals that may be taken
Maintenance and Monitoring: May: 118, June: 113, July: 105, Aug: 44, Sept: 24, Oct: 25.	Maintenance: May: 1, June–Sept: 4/month, Oct: 1.	Maintenance: 1,287.
	Monitoring: June–Sept: 2/month, Oct: 1	Monitoring: 597.
		Total: 2,592.
Artificial Breaching		
Oct: 25	Oct: 2	Oct: 50.
Nov: 26	Nov: 2	Nov: 52.
Dec: 54	Dec: 1	Dec: 54.
Jan: 57	Jan: 1	Jan: 57.
Feb: 88	Feb: 1	Feb: 88.
Mar: 133	Mar: 1	Mar: 133.
Apr: 99	Apr: 1	Apr: 99.
May: 118	May: 1	May: 118.
	10 events maximum	Total: 651.
Topographic Beach Surveys		
Jan: 106	1 survey/month	Jan: 106.
Feb: 143		Feb: 143.
Mar: 138		Mar: 138.
Apr: 159		Apr: 16.[g]
May: 149		May: 298.
Jun: 178		Jun: 356.
Jul: 227		Jul: 454.
Aug: 100		Aug: 200.
Sep: 49		Sep: 98.
Oct: 38		Oct: 76.
Nov: 62		Nov: 124.
Dec: 79		Dec: 158.
		Total: 2,167.
Biological and Physical Habitat Monitoring in the Estuary		
1 [f]	107	107.
Total		5,517.

[a] For lagoon outlet channel management and artificial breaching events, average daily number of animals corresponds with data from bar-closed conditions. For topographic beach surveys, average daily number of animals corresponds with overall monthly average data, as river mouth condition cannot be predicted. See Table 2.

[b] For implementation of the lagoon outlet channel, an event is defined as a single, two-day episode. For the remaining activities, an event is defined as a single day on which an activity occurs. Some events may include multiple activities.

[c] Number of events for artificial breaching assumed based on historical data. See Table 1 of SCWA's application.

[d] See Table 3 of SCWA's application for total number of estuary monitoring events; note that multiple activities may occur during a single event.

[e] Although implementation could occur at any time during the lagoon management period, the highest daily average per month from the lagoon management period was used.

[f] Based on past experience, SCWA expects that no more than one seal may be present, and thus have the potential to be disturbed, at river haul-outs.

[g] Ten percent of animals present during April surveys are assumed to be taken as a result of enhanced mitigation during period when neonates are most likely to be present.

The take numbers described in the preceding text are annual estimates. Therefore, over the course of the 5-year period of validity of the proposed regulations, we propose to authorize through Letter of Authorization a total of 27,585 incidents of take for harbor seals and 170 such incidents each for the California sea lion and northern elephant seal.

Proposed Mitigation

Under Section 101(a)(5)(A) of the MMPA, NMFS must set forth the permissible methods of taking pursuant to such activity, and other means of effecting the least practicable adverse impact on such species or stock and its habitat, paying particular attention to rookeries, mating grounds, and areas of similar significance, and on the availability of such species or stock for taking for certain subsistence uses (''least practicable adverse impact''). NMFS does not have a regulatory definition for ''least practicable adverse impact.'' However, NMFS' implementing regulations require applicants for incidental take authorizations to include information about the availability and feasibility (economic and technological) of equipment, methods, and manner of

conducting such activity or other means of effecting the least practicable adverse impact upon the affected species or stocks and their habitat (50 CFR 216.104(a)(11)).

In evaluating how mitigation may or may not be appropriate to ensure the least practicable adverse impact on species or stocks and their habitat, we carefully consider two primary factors:

(1) The manner in which, and the degree to which, implementation of the measure(s) is expected to reduce impacts to marine mammal species or stocks, their habitat, and their availability for subsistence uses. This analysis will consider such things as the nature of the potential adverse impact (such as likelihood, scope, and range), the likelihood that the measure will be effective if implemented, and the likelihood of successful implementation.

(2) The practicability of the measure for applicant implementation. Practicability of implementation may consider such things as cost, impact on operations, personnel safety, and practicality of implementation.

SCWA has proposed to continue the following mitigation measures, as implemented during the previous ITAs, designed to minimize impact to affected species and stocks:

- SCWA crews would cautiously approach (*e.g.,* slowly and with minimal sound) the haul-out ahead of heavy equipment to minimize the potential for sudden flushes, which may result in a stampede.
- SCWA staff would avoid walking or driving equipment through the seal haul-out.
- Crews on foot would make an effort to be seen by seals from a distance, if possible, rather than appearing suddenly, again preventing sudden flushes.
- Equipment would be driven slowly on the beach and care would be taken to minimize the number of shut-downs and start-ups when the equipment is on the beach to reduce disturbance of seals from loud noises following a relatively quiet period.

In addition, SCWA proposes to continue mitigation measures specific to pupping season (March 15–June 30), as implemented in the previous ITAs:

- SCWA will maintain a one week no-work period between water level management events (unless flooding is an immediate threat) to allow for an adequate disturbance recovery period. During the no-work period, equipment must be removed from the beach.
- A water level management event may not occur for more than two consecutive days unless flooding threats cannot be controlled.
- If a pup less than one week old is on the beach where heavy machinery would be used or on the path used to access the work location, the management action will be delayed until the pup has left the site or the latest day possible to prevent flooding while still maintaining suitable fish rearing habitat. In the event that a pup remains present on the beach in the presence of flood risk, SCWA would consult with NMFS to determine the appropriate course of action. SCWA will coordinate with the locally established seal monitoring program (Stewards' Seal Watch) to determine if pups less than one week old are on the beach prior to a breaching event.
- Physical and biological monitoring will not be conducted if a pup less than one week old is present at the monitoring site or on a path to the site.

For all activities, personnel on the beach would include equipment operators and safety team members. Occasionally, there would be additional people (SCWA staff or regulatory agency staff) on the beach to observe the activities. SCWA staff would be followed by the equipment, which would then be followed by an SCWA vehicle (typically a small pickup truck, the vehicle would be parked at the previously posted signs and barriers on the south side of the excavation location). Equipment would be driven slowly on the beach and care would be taken to minimize the number of shut-downs and start-ups when the equipment is on the beach. All work would be completed as efficiently as possible, with the smallest amount of heavy equipment possible, to minimize disturbance of seals at the haul-out. Boats operating near river haul-outs during monitoring would be kept within posted speed limits and driven as far from the haul-outs as safely possible to minimize flushing seals.

We have carefully evaluated SCWA's proposed mitigation measures and considered a range of other measures in the context of ensuring that we prescribed the means of effecting the least practicable adverse impact on the affected marine mammal species and stocks and their habitat. Based on our evaluation of these measures, we have preliminarily determined that the proposed mitigation measures provide the means of effecting the least practicable adverse impact on marine mammal species or stocks and their habitat, paying particular attention to rookeries, mating grounds, and areas of similar significance, and on the availability of such species or stock for subsistence uses.

Proposed Monitoring and Reporting

In order to issue an LOA for an activity, Section 101(a)(5)(A) of the MMPA states that NMFS must set forth requirements pertaining to the monitoring and reporting of the authorized taking. NMFS's MMPA implementing regulations further describe the information that an applicant should provide when requesting an authorization (50 CFR 216.104(a)(13)), including the means of accomplishing the necessary monitoring and reporting that will result in increased knowledge of the species and the level of taking or impacts on populations of marine mammals.

Monitoring and reporting requirements prescribed by NMFS should contribute to improved understanding of one or more of the following:

- Occurrence of significant interactions with marine mammal species in action area (*e.g.,* animals that came close to the vessel, contacted the gear, or are otherwise rare or displaying unusual behavior).
- Nature, scope, or context of likely marine mammal exposure to potential stressors/impacts (individual or cumulative, acute or chronic), through better understanding of: (1) Action or environment (*e.g.,* source characterization, propagation, ambient noise); (2) affected species (*e.g.,* life history, dive patterns); (3) co-occurrence of marine mammal species with the action; or (4) biological or behavioral context of exposure (*e.g.,* age, calving or feeding areas).
- Individual marine mammal responses (behavioral or physiological) to acoustic stressors (acute, chronic, or cumulative), other stressors, or cumulative impacts from multiple stressors.
- How anticipated responses to stressors impact either: (1) Long-term fitness and survival of individual marine mammals; or (2) populations, species, or stocks.
- Effects on marine mammal habitat (*e.g.,* marine mammal prey species, acoustic habitat, or important physical components of marine mammal habitat).
- Mitigation and monitoring effectiveness.

SCWA submitted a marine mammal monitoring plan as part of the ITA application. It can be found online at *www.fisheries.noaa.gov/action/sonoma-county-water-agencys-estuary-management-activities-sonoma-county-california-2022.* The plan, which has been successfully implemented (in

slightly different form from the currently proposed plan) by SCWA under previous ITAs, may be modified or supplemented based on comments or new information received from the public during the public comment period. The purpose of this monitoring plan, which is carried out collaboratively with the Stewards of the Coasts and Redwoods (Stewards) organization, is to detect the response of pinnipeds to estuary management activities at the Russian River estuary. SCWA will continue to collect data on annual abundance of harbor seals at the Jenner haul-out to monitor trends in population size and annual pup production. Observations of seal behavior will be recorded and reported to monitor any impacts resulting from estuary management and monitoring activities.

Proposed Monitoring Measures

Baseline Monitoring—Baseline data on conditions associated with seal presence at the Jenner haul-out would be collected each year from March 15 through October 15. Generally, monitoring associated with implementation and maintenance of the lagoon outlet channel would occur between May 15 and October 15. Monitoring of artificial breaching activities would occur with each event, generally outside the lagoon management period. Should the mouth remain open during the lagoon management period, monitoring of the Jenner haul-out would continue as described below.

Baseline monitoring will occur at the Jenner overlook from March 15 to October 15. This schedule would capture the pupping and molting seasons, and extend to the end of the beach management period, when management activities are more likely to occur. Surveys would be conducted twice monthly, except for the pupping season (April–May) when surveys would be conducted weekly in order to record the presence of neonate harbor seals. The haul-out will be monitored for 4 hours, scheduled for any consecutive block between the hours of 0800 and 1600. An effort will be made to avoid periods of high tide when scheduling baseline surveys.

All seals hauled out on the beach will be counted every 30 minutes from the overlook on the bluff along Highway 1 adjacent to the haul-out using a high powered spotting scope. Monitoring may conclude for the day if weather conditions affect visibility (*e.g.,* heavy fog in the afternoon). Depending on how the sandbar is formed, seals may haul out in multiple groups at the mouth. At each thirty minute count, the observer indicates where groups of seals are hauled out on the sandbar and provides a total count for each group. When possible, adults and pups will be counted separately. The observer will provide a sketch of where the seals are hauled out on the back of the data sheet.

In addition to the count data, disturbances of the haul-out will be recorded. The methods for recording disturbances would follow a three-point scale adopted by NMFS that represents an increasing seal response to the disturbance (Table 4). For each disturbance event the disturbance source and seal response will be recorded and tallied. Disturbance events corresponding with Levels 2–3 are considered to be harassment. Weather conditions will also be recorded at the beginning of each survey.

TABLE 4—SEAL RESPONSE TO DISTURBANCE

Level	Type of response	Definition
1	Alert	Seal head orientation or brief movement in response to disturbance, which may include turning head towards the disturbance, craning head and neck while holding the body rigid in a u-shaped position, changing from a lying to a sitting position, or brief movement of less than twice the animal's body length.
2	Movement	Movements in response to the source of disturbance, ranging from short withdrawals at least twice the animal's body length to longer retreats over the beach, or if already moving a change of direction of greater than 90 degrees.
3	Flight	All retreats (flushes) to the water.

Estuary Management Event Monitoring, Lagoon Outlet Channel—Should the mouth close during the lagoon management period, SCWA would construct a lagoon outlet channel as required by the BiOp. Activities associated with the initial construction of the outlet channel, as well as the maintenance of the channel that may be required, would be monitored for disturbances to the seals at the Jenner haul-out.

A 1-day pre-outlet channel survey would be made within 1 to 3 days prior to constructing the outlet channel. The haul-out would be monitored on the day the outlet channel is constructed and daily for up to 2 days during channel excavation activities. Monitoring would also occur on each day that the outlet channel is maintained using heavy equipment for the duration of the lagoon management period.

Monitoring of outlet channel maintenance would correspond with the monitoring described under the ''Baseline Monitoring'' section above. Methods would follow the count and disturbance monitoring protocols described in the ''Baseline Monitoring'' section.

Estuary Management Event Monitoring, Artificial Breaching Events—In accordance with the BiOp, SCWA may artificially breach the barrier beach outside of the summer lagoon management period, and may conduct a maximum of two such breachings during the lagoon management period, when estuary water surface elevations rise above seven feet. In that case, NMFS may be consulted regarding potential scheduling of an artificial breaching event to open the barrier beach and reduce flooding risk.

Pinniped response to artificial breaching will be monitored at each such event during the period of validity of these proposed regulations. Methods would follow the census and disturbance monitoring protocols described in the ''Baseline Monitoring'' section, which were also used for the 1996 to 2000 monitoring events and since 2009. The exception, as for lagoon management events, is that duration of monitoring is dependent upon duration of the event. On the day of the management event, pinniped monitoring begins at least one hour prior to the crew and equipment accessing the beach work area and continues through the duration of the event, until at least one hour after the crew and equipment leave the beach.

For all counts, the following information would be recorded in 30-minute intervals: (1) Pinniped counts, by species; (2) behavior; (3) time, source and duration of any disturbance; (4)

estimated distances between source of disturbance and pinnipeds; (5) weather conditions (*e.g.,* temperature, wind); and (5) tide levels and estuary water surface elevation.

Monitoring During Pupping Season—The pupping season is defined as March 15 to June 30. Baseline, lagoon outlet channel, and artificial breaching monitoring during the pupping season will include records of neonate (pups less than one week old) observations. Characteristics of a neonate pup include: Body weight less than 15 kg; thin for their body length; an umbilicus or natal pelage present; wrinkled skin; and awkward or jerky movements on land. SCWA will coordinate with the Seal Watch monitoring program to determine if pups less than one week old are on the beach prior to a water level management event.

If, during monitoring, observers sight any pup that might be abandoned, SCWA would contact the NMFS stranding response network immediately and also report the incident to NMFS' West Coast Regional Office and Office of Protected Resources within 48 hours. Observers will not approach or move the pup. Potential indications that a pup may be abandoned are no observed contact with adult seals, no movement of the pup, and the pup's attempts to nurse are rebuffed.

Staffing—Monitoring would be conducted by qualified individuals. Generally, these individuals would include professional biologists employed by SCWA or volunteers trained by the Stewards and SCWA. All volunteer monitors would be required to attend a classroom-style training and on site mentoring by an experienced observer. Training would cover the MMPA and conditions of the LOA, SCWA's Pinniped Monitoring Program, pinniped species identification, age class identification (including a specific discussion regarding neonates), recording of count and disturbance observations (including completion of datasheets), and use of equipment. Pinniped identification would include harbor seal, California sea lion, and northern elephant seal, as well as other pinniped species with potential to occur in the area (*i.e.,* northern fur seals, Guadalupe fur seals, Steller sea lions).

Generally, volunteers would collect baseline data on Jenner haul-out use during the bi-weekly monitoring events. A schedule for this monitoring would be established with Stewards once volunteers are available for the monitoring effort. SCWA staff would monitor lagoon outlet channel excavation, maintenance activities, artificial breaching events, and biological or physical monitoring activities at the Jenner haul-out.

Reporting

SCWA is required to submit an annual report on all activities and marine mammal monitoring results to NMFS within 90 days following the end of the monitoring period. These reports would contain the following information:

- The number of pinnipeds taken, by species and age class (if possible);
- Behavior prior to and during water level management events;
- Start and end time of activity;
- Estimated distances between source and pinnipeds when disturbance occurs;
- Weather conditions (*e.g.,* temperature, wind, etc.);
- Haul-out reoccupation time of any pinnipeds based on post-activity monitoring;
- Tide levels and estuary water surface elevation; and
- Pinniped census from bi-monthly and nearby haul-out monitoring.

The annual report includes descriptions of monitoring methodology, tabulation of estuary management events, summary of monitoring results, and discussion of problems noted and proposed remedial measures.

Summary of Previous Monitoring

SCWA complied with the mitigation and monitoring required under previous authorizations. Previous monitoring reports are available online at *www.fisheries.noaa.gov/action/incidental-take-authorization-sonoma-county-water-agencys-estuary-management-activities.*

While the observed take in all years was significantly lower than the level authorized, it is possible that incidental take in future years could approach the level authorized. Actual take is dependent largely upon the number of water level management events that occur, which is unpredictable. Take of species other than harbor seals depends upon whether those species, which do not consistently utilize the Jenner haul-out, are present. The authorized take, though much higher than the actual take, is justified based on conservative estimated scenarios for animal presence and necessity of water level management. No significant departure from the method of estimation is used for these proposed regulations (see Estimated Take) for the same activities in 2022–27.

Since 2009 SCWA has been conducting baseline monitoring of the Jenner haul-out and several nearby coastal and estuary sites (as described in the 2016 Monitoring Plan, available online at *www.fisheries.noaa.gov/action/incidental-take-authorization-sonoma-county-water-agencys-estuary-management-activities*). The purpose of baseline monitoring was to describe the conditions under which harbor seals haul out and how seals respond to implementation of the estuary management program. Monitoring data illustrate a strong seasonal pattern in most years where seals are most abundant during the spring and summer months (see Figure 2 of SCWA's 2021 Monitoring Plan). Seasonal variation in the abundance of harbor seals is commonly observed throughout their range. Seal abundance at the Jenner haul-out was shown to increase throughout the day, but only during the spring and winter months (see Figure 3 of SCWA's 2021 Monitoring Plan). Seal abundance was weakly affected by tide height with higher tides shown to reduce seal abundance (see Figure 4 of SCWA's 2021 Monitoring Plan), based on direct observations, this is likely due to waves washing over the haul-out during these high tides. Seal abundance was also greater when the river mouth was open to the ocean (see Figure 5 of SCWA's 2021 Monitoring Plan).

In addition to baseline monitoring, monitoring during water level management activities (breaching and lagoon outlet implementation) has been ongoing since 2009. Recent observations of seals during breaching activities indicate that seals leave the Jenner haul-out as safety crews approach their haul-out ahead of equipment. Depending on the location of their haul-out seals have also remained on the beach during breaching activities. The number of harbor seals hauled out at the mouth of the estuary declined when the barrier beach was closed and increased soon after it was breached. Seals that left the haul-out just prior to breaching have returned to the beach within hours of completion of activities and typically return prior to the next morning (see prior SCWA monitoring reports, available online at *www.fisheries.noaa.gov/action/incidental-take-authorization-sonoma-county-water-agencys-estuary-management-activities*).

Negligible Impact Analysis and Determination

NMFS has defined negligible impact as an impact resulting from the specified activity that cannot be reasonably expected to, and is not reasonably likely to, adversely affect the species or stock through effects on

annual rates of recruitment or survival (50 CFR 216.103). A negligible impact finding is based on the lack of likely adverse effects on annual rates of recruitment or survival (*i.e.,* population-level effects). An estimate of the number of takes alone is not enough information on which to base an impact determination. In addition to considering estimates of the number of marine mammals that might be ''taken'' by mortality, serious injury, and Level A or Level B harassment, we consider other factors, such as the likely nature of any behavioral responses (*e.g.,* intensity, duration), the context of any such responses (*e.g.,* critical reproductive time or location, migration), as well as effects on habitat, and the likely effectiveness of mitigation. We also assess the number, intensity, and context of estimated takes by evaluating this information relative to population status. Consistent with the 1989 preamble for NMFS's implementing regulations (54 FR 40338; September 29, 1989), the impacts from other past and ongoing anthropogenic activities are incorporated into this analysis via their impacts on the environmental baseline (*e.g.,* as reflected in the regulatory status of the species, population size and growth rate where known, ongoing sources of human-caused mortality).

Although SCWA's estuary management activities may disturb pinnipeds hauled out at the mouth of the Russian River, as well as those hauled out at several locations in the estuary during recurring monitoring activities, impacts are occurring to a small, localized group of animals. While these impacts can occur year-round, they occur sporadically and for limited duration (*e.g.,* a maximum of two consecutive days for water level management events). Seals will likely become alert or, at most, flush into the water in reaction to the presence of crews and equipment on the beach. While disturbance may occur during a sensitive time (during the March 15–June 30 pupping season), mitigation measures have been specifically designed to further minimize harm during this period and eliminate the possibility of pup injury or mother-pup separation.

No injury, serious injury, or mortality is anticipated, nor is the proposed action likely to result in long-term impacts such as permanent abandonment of the haul-out. Injury, serious injury, or mortality to pinnipeds would likely result from startling animals inhabiting the haul-out into a stampede reaction, or from extended mother-pup separation as a result of such a stampede. Long-term impacts to pinniped usage of the haul-out were previously considered to be a potential result of increased presence of humans and equipment on the beach. However, 10 years of monitoring has not shown any such impacts to seal usage of the beach. Nevertheless, SCWA will continue to implement the previously described mitigation measures. These are designed to reduce the possibility of startling pinnipeds, by gradually apprising them of the presence of humans and equipment on the beach, and to reduce the possibility of impacts to pups by eliminating or altering management activities on the beach when pups are present and by setting limits on the frequency and duration of events during pupping season. During the past 20 years of flood control management, implementation of similar mitigation measures has resulted in no known stampede events and no known injury, serious injury, or mortality. Over the course of that time period, management events have generally been infrequent and of limited duration.

No pinniped stocks for which incidental take authorization is proposed are listed as threatened or endangered under the ESA or determined to be strategic or depleted under the MMPA. Existing data suggest that harbor seal populations have reached carrying capacity; populations of California sea lions and northern elephant seals in California are also considered healthy.

In summary, and based on extensive monitoring data, we believe that impacts to hauled-out pinnipeds during estuary management activities would be behavioral harassment of limited duration (*i.e.,* less than one day) and limited intensity (*i.e.,* temporary flushing at most). Stampeding, and therefore injury or mortality, is not expected—nor been documented—in the years since appropriate protocols were established (see Proposed Mitigation for more details). Further, the continued, and increasingly heavy (see figures in SCWA documents), use of the haul-out despite decades of breaching events indicates that abandonment of the haul-out is unlikely.

Based on the analysis contained herein of the likely effects of the specified activity on marine mammals and their habitat, and taking into consideration the implementation of the proposed monitoring and mitigation measures, we preliminarily find that the total marine mammal take from SCWA's construction activities will have a negligible impact on the affected marine mammal species or stocks.

Small Numbers

As noted above, only small numbers of incidental take may be authorized under section 101(a)(5)(A) of the MMPA for specified activities other than military readiness activities. The MMPA does not define small numbers and so, in practice, where estimated numbers are available, NMFS compares the number of individuals taken to the most appropriate estimation of abundance of the relevant species or stock in our determination of whether an authorization is limited to small numbers of marine mammals. When the predicted number of individuals to be taken is fewer than one third of the species or stock abundance, the take is considered to be of small numbers. Additionally, other qualitative factors may be considered in the analysis, such as the temporal or spatial scale of the activities.

The annual amount of take NMFS proposes to authorize is below one-third of the estimated stock abundance for all species (see Table 3). However, this represents an overestimate of the number of individuals harassed annually over the duration of the proposed regulations, because these totals represent much smaller numbers of individuals that may be harassed multiple times. Based on the analysis contained herein of the proposed activity (including the proposed mitigation and monitoring measures) and the anticipated take of marine mammals, NMFS preliminarily finds that small numbers of marine mammals will be taken relative to the population size of the affected species or stocks.

Unmitigable Adverse Impact Analysis and Determination

There are no relevant subsistence uses of marine mammals implicated by the specified activity. Therefore, we have determined that the total taking of affected species or stocks would not have an unmitigable adverse impact on the availability of such species or stocks for taking for subsistence purposes.

Adaptive Management

The regulations governing the take of marine mammals incidental to SCWA estuary management activities would contain an adaptive management component.

The reporting requirements associated with this proposed rule are designed to provide NMFS with monitoring data from the previous year to allow consideration of whether any changes are appropriate. The use of adaptive management allows NMFS to consider new information from different sources

to determine (with input from SCWA regarding practicability) on an annual or biennial basis if mitigation or monitoring measures should be modified (including additions or deletions). Mitigation measures could be modified if new data suggests that such modifications would have a reasonable likelihood of reducing adverse effects to marine mammals and if the measures are practicable.

SCWA's monitoring program (see Proposed Monitoring) would be managed adaptively. Changes to the proposed monitoring program may be adopted if they are reasonably likely to better accomplish the MMPA monitoring goals described previously or may better answer the specific questions associated with SCWA's monitoring plan.

The following are some of the possible sources of applicable data to be considered through the adaptive management process: (1) Results from monitoring reports, as required by MMPA authorizations; (2) results from general marine mammal and sound research; and (3) any information which reveals that marine mammals may have been taken in a manner, extent, or number not authorized by these regulations or subsequent LOAs.

Endangered Species Act (ESA)

No marine mammal species listed under the ESA are expected to be affected by these activities. Therefore, we have determined that section 7 consultation under the ESA is not required.

Request for Information

NMFS requests interested persons to submit comments, information, and suggestions concerning SCWA's request and the proposed regulations (see **ADDRESSES**). All comments will be reviewed and evaluated as we prepare the final rule and make final determinations on whether to issue the requested authorization. This notice and referenced documents provide all environmental information relating to our proposed action for public review.

Classification

Pursuant to the procedures established to implement Executive Order 12866, the Office of Management and Budget has determined that this proposed rule is not significant.

Pursuant to section 605(b) of the Regulatory Flexibility Act (RFA), the Chief Counsel for Regulation of the Department of Commerce has certified to the Chief Counsel for Advocacy of the Small Business Administration that this proposed rule, if adopted, would not have a significant economic impact on a substantial number of small entities. SCWA is the sole entity that would be subject to the requirements in these proposed regulations, and the Sonoma County Water Agency is not a small governmental jurisdiction, small organization, or small business, as defined by the RFA. Under the RFA, governmental jurisdictions are considered to be small if they are ''. . . governments of cities, counties, towns, townships, villages, school districts, or special districts, with a population of less than 50,000. . . .'' As of the 2020 census, Sonoma County, CA had a population of nearly 500,000 people. Because of this certification, a regulatory flexibility analysis is not required and none has been prepared.

Notwithstanding any other provision of law, no person is required to respond to nor shall a person be subject to a penalty for failure to comply with a collection of information subject to the requirements of the Paperwork Reduction Act (PRA) unless that collection of information displays a currently valid OMB control number. These requirements have been approved by OMB under control number 0648–0151 and include applications for regulations, subsequent LOAs, and reports. Send comments regarding any aspect of this data collection, including suggestions for reducing the burden, to NMFS.

List of Subjects in 50 CFR Part 217

Exports, Fish, Imports, Indians, Labeling, Marine mammals, Penalties, Reporting and recordkeeping requirements, Seafood, Transportation.

Dated: January 13, 2022.

Samuel D. Rauch III,

Deputy Assistant Administrator for Regulatory Programs, National Marine Fisheries Service.

For reasons set forth in the preamble, 50 CFR part 217 is proposed to be amended as follows:

PART 217—REGULATIONS GOVERNING THE TAKING AND IMPORTING OF MARINE MAMMALS

■ 1. The authority citation for part 217 continues to read as follows:

Authority: 16 U.S.C. 1361 *et seq.*

■ 2. Add subpart A to part 217 to read as follows:

Subpart A—Taking Marine Mammals Incidental to Russian River Estuary Management Activities

Sec.

217.1 Specified activity and specified geographical region.
217.2 Effective dates.
217.3 Permissible methods of taking.
217.4 Prohibitions.
217.5 Mitigation requirements.
217.6 Requirements for monitoring and reporting.
217.7 Letters of Authorization.
217.8 Renewals and modifications of Letters of Authorization.
217.9 [Reserved]
217.10 [Reserved]

§ 217.1 Specified activity and specified geographical region.

(a) Regulations in this subpart apply only to the Sonoma County Water Agency (SCWA) and those persons it authorizes or funds to conduct activities on its behalf for the taking of marine mammals that occurs in the area outlined in paragraph (b) of this section and that occurs incidental to estuary management activities.

(b) The taking of marine mammals by SCWA may be authorized in a Letter of Authorization (LOA) only if it occurs at Goat Rock State Beach or in the Russian River estuary in California.

§ 217.2 Effective dates.

Regulations in this subpart are effective from April 21, 2022, through April 20, 2027.

§ 217.3 Permissible methods of taking.

(a) Under LOAs issued pursuant to §§ 216.106 of this chapter and 217.7, the Holder of the LOA (hereinafter ''SCWA'') may incidentally, but not intentionally, take marine mammals within the area described in § 217.1(b) of this chapter by Level B harassment associated with estuary management activities, provided the activity is in compliance with all terms, conditions, and requirements of the regulations in this subpart and the appropriate LOA.

(b) [Reserved]

§ 217.4 Prohibitions.

Except for the takings contemplated in § 217.3 and authorized by an LOA issued under §§ 216.106 of this chapter and 217.7, it is unlawful for any person to do any of the following in connection with the activities described in § 217.1 of this chapter:

(a) Violate, or fail to comply with, the terms, conditions, and requirements of this subpart or an LOA issued under §§ 216.106 of this chapter and 217.7;

(b) Take any marine mammal not specified in such LOAs;

(c) Take any marine mammal specified in such LOAs in any manner other than as specified;

(d) Take a marine mammal specified in such LOAs if NMFS determines such taking results in more than a negligible impact on the species or stocks of such marine mammal; or

(e) Take a marine mammal specified in such LOAs if NMFS determines such taking results in an unmitigable adverse impact on the species or stock of such marine mammal for taking for subsistence uses.

§ 217.5 Mitigation requirements.

When conducting the activities identified in § 217.1(a), the mitigation measures contained in any LOA issued under §§ 216.106 of this chapter and 217.7 must be implemented. These mitigation measures shall include but are not limited to:

(a) General conditions:

(1) A copy of any issued LOA must be in the possession of SCWA, its designees, and work crew personnel operating under the authority of the issued LOA.

(2) If SCWA observes a pup that may be abandoned, it shall contact the National Marine Fisheries Service (NMFS) West Coast Regional Stranding Coordinator immediately and also report the incident to NMFS Office of Protected Resources within 48 hours. Observers shall not approach or move the pup.

(b) SCWA crews shall cautiously approach the haul-out ahead of heavy equipment.

(c) SCWA staff shall avoid walking or driving equipment through the seal haul-out.

(d) Crews on foot shall make an effort to be seen by seals from a distance.

(e) All work shall be completed as efficiently as possible and with the smallest amount of heavy equipment possible.

(f) Boats operating near river haul-outs during monitoring shall be kept within posted speed limits and driven as far from the haul-outs as safely possible.

(g) SCWA shall implement the following mitigation measures during pupping season (March 15–June 30):

(1) SCWA shall maintain a one week no-work period between water level management events (unless flooding is an immediate threat) to allow for an adequate disturbance recovery period. During the no-work period, equipment must be removed from the beach;

(2) A water level management event may not occur for more than two consecutive days unless flooding threats cannot be controlled.

(3) If a pup less than one week old is on the beach where heavy machinery will be used or on the path used to access the work location, the management action shall be delayed until the pup has left the site or the latest day possible to prevent flooding while still maintaining suitable fish rearing habitat. In the event that a pup remains present on the beach in the presence of flood risk, SCWA shall consult with NMFS and the California Department of Fish and Wildlife to determine the appropriate course of action. SCWA shall determine if pups less than one week old are on the beach prior to a breaching event.

(4) Physical and biological monitoring shall not be conducted if a pup less than one week old is present at the monitoring site or on a path to the site.

§ 217.6 Requirements for monitoring and reporting.

(a) Monitoring and reporting shall be conducted in accordance with the approved Pinniped Monitoring Plan.

(b) Reporting:

(1) Annual reporting:

(i) SCWA shall submit an annual summary report to NMFS not later than ninety days following the end of a given calendar year. SCWA shall provide a final report within thirty days following resolution of comments on the draft report.

(ii) These reports shall contain, at minimum, the following:

(A) The number of seals taken, by species and age class (if possible);

(B) Behavior prior to and during water level management events;

(C) Start and end time of activity;

(D) Estimated distances between source and seals when disturbance occurs;

(E) Weather conditions (*e.g.,* temperature, wind, etc.);

(F) Haul-out reoccupation time of any seals based on post-activity monitoring;

(G) Tide levels and estuary water surface elevation; and

(H) Seal census from haul-out monitoring.

(2) [Reserved]

(c) Reporting of injured or dead marine mammals:

(1) In the unanticipated event that the activity defined in § 217.1(a) clearly causes the take of a marine mammal in a prohibited manner, SCWA shall immediately cease such activity and report the incident to the Office of Protected Resources (OPR), NMFS and the West Coast Regional Stranding Coordinator, NMFS. Activities shall not resume until NMFS is able to review the circumstances of the prohibited take. NMFS will work with SCWA to determine what measures are necessary to minimize the likelihood of further prohibited take and ensure MMPA compliance. SCWA may not resume their activities until notified by NMFS. The report must include the following information:

(i) Time and date of the incident;

(ii) Description of the incident;

(iii) Environmental conditions;

(iv) Description of all marine mammal observations in the 24 hours preceding the incident;

(v) Species identification or description of the animal(s) involved;

(vi) Fate of the animal(s); and

(vii) Photographs or video footage of the animal(s).

(2) In the event that SCWA discovers an injured or dead marine mammal and determines that the cause of the injury or death is unknown and the death is relatively recent (*e.g.,* in less than a moderate state of decomposition), SCWA shall immediately report the incident to OPR and the West Coast Regional Stranding Coordinator, NMFS. The report must include the information identified in paragraph (c)(1) of this section. Activities may continue while NMFS reviews the circumstances of the incident. NMFS will work with SCWA to determine whether additional mitigation measures or modifications to the activities are appropriate.

(3) In the event that SCWA discovers an injured or dead marine mammal and determines that the injury or death is not associated with or related to the activities defined in § 217.1(a) (*e.g.,* previously wounded animal, carcass with moderate to advanced decomposition, scavenger damage), SCWA shall report the incident to OPR and the West Coast Regional Stranding Coordinator, NMFS, within 24 hours of the discovery. SCWA shall provide photographs or video footage or other documentation of the stranded animal sighting to NMFS.

(4) Pursuant to paragraphs (c)(2–3) of this section, SCWA may use discretion in determining what injuries (*i.e.,* nature and severity) are appropriate for reporting. At minimum, SCWA must report those injuries considered to be serious (*i.e.,* will likely result in death) or that are likely caused by human interaction (*e.g.,* entanglement, gunshot). Also pursuant to sections paragraphs (c)(2–3) of this section, SCWA may use discretion in determining the appropriate vantage point for obtaining photographs of injured/dead marine mammals.

§ 217.7 Letters of Authorization.

(a) To incidentally take marine mammals pursuant to these regulations, SCWA must apply for and obtain an LOA.

(b) An LOA, unless suspended or revoked, may be effective for a period of time not to exceed the expiration date of these regulations.

(c) If an LOA expires prior to the expiration date of these regulations,

SCWA may apply for and obtain a renewal of the LOA.

(d) In the event of projected changes to the activity or to mitigation and monitoring measures required by an LOA, SCWA must apply for and obtain a modification of the LOA as described in § 217.8.

(e) The LOA shall set forth:

(1) Permissible methods of incidental taking;

(2) Means of effecting the least practicable adverse impact (*i.e.,* mitigation) on the species, its habitat, and on the availability of the species for subsistence uses; and

(3) Requirements for monitoring and reporting.

(f) Issuance of the LOA shall be based on a determination that the level of taking will be consistent with the findings made for the total taking allowable under these regulations.

(g) Notice of issuance or denial of an LOA shall be published in the **Federal Register** within 30 days of a determination.

§ 217.8 Renewals and modifications of Letters of Authorization.

(a) An LOA issued under §§ 216.106 of this chapter and 217.7 for the activity identified in § 217.1(a) shall be renewed or modified upon request by the applicant, provided that:

(1) The proposed specified activity and mitigation, monitoring, and reporting measures, as well as the anticipated impacts, are the same as those described and analyzed for these regulations (excluding changes made pursuant to the adaptive management provision in paragraph (c)(1) of this section), and

(2) NMFS determines that the mitigation, monitoring, and reporting measures required by the previous LOA under these regulations were implemented.

(b) For an LOA modification or renewal requests by the applicant that include changes to the activity or the mitigation, monitoring, or reporting (excluding changes made pursuant to the adaptive management provision in paragraph (c)(1) of this section) that do not change the findings made for the regulations or result in no more than a minor change in the total estimated number of takes (or distribution by species or years), NMFS may publish a notice of proposed LOA in the **Federal Register**, including the associated analysis of the change, and solicit public comment before issuing the LOA.

(c) An LOA issued under §§ 216.106 of this chapter and 217.7 for the activity identified in § 217.1(a) may be modified by NMFS under the following circumstances:

(1) Adaptive Management—NMFS may modify (including augment) the existing mitigation, monitoring, or reporting measures (after consulting with SCWA regarding the practicability of the modifications) if doing so creates a reasonable likelihood of more effectively accomplishing the goals of the mitigation and monitoring set forth in the preamble for these regulations.

(i) Possible sources of data that could contribute to the decision to modify the mitigation, monitoring, or reporting measures in an LOA:

(A) Results from SCWA's monitoring from the previous year(s).

(B) Results from other marine mammal and/or sound research or studies.

(C) Any information that reveals marine mammals may have been taken in a manner, extent or number not authorized by these regulations or subsequent LOAs.

(ii) If, through adaptive management, the modifications to the mitigation, monitoring, or reporting measures are substantial, NMFS will publish a notice of proposed LOA in the **Federal Register** and solicit public comment.

(2) Emergencies—If NMFS determines that an emergency exists that poses a significant risk to the well-being of the species or stocks of marine mammals specified in LOAs issued pursuant to §§ 216.106 of this chapter and 217.7, an LOA may be modified without prior notice or opportunity for public comment. Notice would be published in the **Federal Register** within thirty days of the action.

§ 217.9 [Reserved]

§ 217.10 [Reserved]

[FR Doc. 2022–00996 Filed 1–20–22; 8:45 am]

BILLING CODE 3510–22–P

DEPARTMENT OF COMMERCE

National Oceanic and Atmospheric Administration

50 CFR Part 665

RIN 0648–BK79

Pacific Island Fisheries; Amendment 5 to the Fishery Ecosystem Plan for the American Samoa Archipelago; American Samoa Bottomfish Fishery Rebuilding Plan

AGENCY: National Marine Fisheries Service (NMFS), National Oceanic and Atmospheric Administration (NOAA), Commerce.

ACTION: Announcement of availability of fishery ecosystem plan amendment; request for comments.

SUMMARY: NMFS announces that the Western Pacific Fishery Management Council (Council) proposes to amend the Fishery Ecosystem Plan for the American Samoa Archipelago (FEP). If approved, Amendment 5 would establish a rebuilding plan for the American Samoa bottomfish stock complex. The Council recommended Amendment 5 to rebuild the bottomfish stock, which is overfished and experiencing overfishing.

DATES: NMFS must receive comments on Amendment 5 by March 22, 2022.

ADDRESSES: You may submit comments on this document, identified by NOAA–NMFS–2022–0006, by either of the following methods:

- *Electronic Submission:* Submit all electronic public comments via the Federal e-Rulemaking Portal. Go to *https://www.regulations.gov* and enter NOAA–NMFS–2022–0006, in the Search box. Click on the ''Comment'' icon, complete the required fields, and enter or attach your comments.
- *Mail:* Send written comments to Michael D. Tosatto, Regional Administrator, NMFS Pacific Islands Region (PIR), 1845 Wasp Blvd., Bldg. 176, Honolulu, HI 96818.
- *Instructions:* NMFS may not consider comments sent by any other method, to any other address or individual, or received after the end of the comment period. All comments received are a part of the public record, and NMFS will generally post them for public viewing on *www.regulations.gov* without change. All personal identifying information (*e.g.,* name, address, etc.), confidential business information, or otherwise sensitive information submitted voluntarily by the sender will be publicly accessible. NMFS will accept anonymous comments (enter ''N/A'' in the required fields if you wish to remain anonymous).

Amendment 5 includes a draft environmental assessment (EA) and regulatory impact review (RIR) that analyzes the potential impacts of the proposed action and alternatives considered. Copies of Amendment 5, including the EA and RIR, and other supporting documents, are available at *https://www.regulations.gov* or the Council, 1164 Bishop St., Suite 1400, Honolulu, HI 96813, tel 808–522–8220, *www.wpcouncil.org.*

FOR FURTHER INFORMATION CONTACT: Heather Cronin, Sustainable Fisheries, NMFS PIR, 808–725–5179.

SUPPLEMENTARY INFORMATION: NMFS and the Council manage the American Samoa bottomfish fishery under the FEP and implementing regulations. The Council and NMFS only have the authority to develop and implement fishery management regulations in Federal waters, and the American Samoa Government has the authority to implement fishery management measures in territorial waters. The fishery primarily targets and harvests 11 species of emperors, snappers, groupers, and jacks. Bottomfish are typically harvested in deep waters, though some species are caught over reefs at shallower depths. Fishing for bottomfish primarily occurs within 20 miles from shore using aluminum catamarans less than 32 feet (9.7 m) long, known locally as alia. There are fewer than 20 participants in the fishery. Bottomfish fishermen in American Samoa are not required to obtain a Federal permit to fish for bottomfish management unit species (BMUS) or report their BMUS catch to NMFS. American Samoa has a mandatory requirement for entities that sell any seafood products (*e.g.,* fish dealers, hotels, and restaurants) to submit invoice reports to American Samoa Division of Marine and Wildlife Resources. There are no territorial permitting requirements to fish for bottomfish in territorial waters.

Currently, the fishery is relatively small and primarily non-commercial, but it is still of importance to the local economy, and from social, cultural, and food security standpoints. In the past 20 years, the estimated total catch has varied from a high of 42,301 lb (19,187 kg) in 2001 to a low of 7,688 lb (3,487 kg) in 2012. The average catch from 2018–2020 was 12,687 lb (5,755 kg), with 965 lb (438 kg) attributed to the commercial fishery and the 11,722 lb (5,317 kg) attributed to the non-commercial sector. In 2020, the commercial price was $3.48/lb ($7.67/kg) and the estimated fishery revenue was $4,018.

On February 10, 2020, NMFS notified the Council that the bottomfish stock complex was overfished and subject to overfishing (85 FR 26940, May 6, 2020). Consistent with section 304(e) of the Magnuson-Stevens Fishery Conservation and Management Act and implementing regulations at 50 CFR 600.310(j), the Council must prepare, and NMFS must implement a rebuilding plan within two years of the notification. If approved, Amendment 5 would implement a rebuilding plan for the American Samoa bottomfish stock complex that consists of an annual catch limit (ACL) and two accountability measures (AM). We would set the ACL to 5,000 lb (2,268 kg) starting in 2022. Because NMFS is obligated to manage the stock throughout its range, and the complex exists in both territorial and Federal waters, we would count harvests from territorial and Federal waters toward the ACL. Note, however, that existing data collection programs do not differentiate catch from territorial versus Federal waters. The fishing year is the calendar year.

As an in-season AM, if NMFS projects that the fishery will reach the ACL in any year, then we would close the fishery in Federal waters for the remainder of that year. At this time, the American Samoan Government does not have regulations in place to implement a complementary closure in territorial waters at the same time as a Federal closure. Therefore, NMFS expects there could continue to be fishing in territorial waters even after a closure of the bottomfish fishery in Federal waters, and this could offset the potential conservation benefits of restricting bottomfish harvest in Federal waters. As an additional AM, if the total annual catch (which includes catch from both Federal and territorial waters) exceeds the ACL during a year, we would close the fishery in Federal waters until NMFS and the Territory of American Samoa implement a coordinated management regime to ensure that the catch in both Federal and territorial waters is maintained at levels that allow the stock to rebuild. The rebuilding plan would remain in place until NMFS determines that the stock complex is rebuilt, which is expected to take 10 years if catches are maintained at the specified level. NMFS and the Council would review the rebuilding plan every two years and amend it, as necessary.

NMFS must receive comments on Amendment 5 by March 22, 2022 for consideration in the decision to approve, partially approve, or disapprove the amendment. Concurrent with our review of the amendment under the Magnuson-Stevens Act procedures, NMFS expects to publish in the **Federal Register** and request public comment on a proposed rule that would implement the draft measures described in Amendment 5. NMFS specifically invites public comments that address the impact of Amendment 5 and the proposed rule on cultural fishing in American Samoa.

Authority: 16 U.S.C. 1801 *et seq.*

Dated: January 18, 2022.

Ngagne Jafnar Gueye,

Acting Director, Office of Sustainable Fisheries, National Marine Fisheries Service.

[FR Doc. 2022–01189 Filed 1–20–22; 8:45 am]

BILLING CODE 3510–22–P

Notices

Federal Register

Vol. 87, No. 14

Friday, January 21, 2022

This section of the FEDERAL REGISTER contains documents other than rules or proposed rules that are applicable to the public. Notices of hearings and investigations, committee meetings, agency decisions and rulings, delegations of authority, filing of petitions and applications and agency statements of organization and functions are examples of documents appearing in this section.

DEPARTMENT OF AGRICULTURE

Forest Service

National Forests in North Carolina; Revision of the Land Management Plan for the Nantahala and Pisgah National Forests

AGENCY: Forest Service, Agriculture (USDA).

ACTION: Notice of opportunity to object to the revised Land Management Plan and the Regional Forester's list of species of conservation concern for the Nantahala and Pisgah National Forests.

SUMMARY: The Forest Service, U.S. Department of Agriculture, is revising the Nantahala and Pisgah National Forests' Land Management Plan (Forest Plan). The Forest Service has prepared a Final Environmental Impact Statement (FEIS) for its revised Forest Plan, and a draft Record of Decision (ROD). This notice is to inform the public that the National Forests in North Carolina is initiating a 60-day period where individuals or entities with specific concerns about the Nantahala and Pisgah National Forests' revised Forest Plan and the associated FEIS may file objections for Forest Service review prior to the approval of the revised Forest Plan. This is also an opportunity to object to the Regional Forester's list of species of conservation concern for the Nantahala and Pisgah National Forests.

DATES: The publication date of the legal notice in the Nantahala and Pisgah National Forests' newspaper of record, *Asheville Citizen Times,* initiates the 60-day objection filing period and is the exclusive means for calculating the time to file an objection (36 CFR 219.52(c)(5)). An electronic scan of the legal notice with the publication date will be posted at *http://www.fs.usda.gov/goto/nfsnc/nprevision.*

ADDRESSES: The Nantahala and Pisgah National Forests' revised Forest Plan, FEIS, draft ROD, species of conservation concern list, and other supporting information will be available for review at: *http://www.fs.usda.gov/goto/nfsnc/nprevision.*

Objections must be submitted to the Objection Reviewing Officer by one of the following methods:

- *Via regular mail to the following address:* National Forests in North Carolina, ATTN: Objection Coordinator, 160 Zillicoa St., Suite A, Asheville, NC 28801.
- Objections may be submitted electronically at *https://cara.ecosystem-management.org/Public/CommentInput?Project=43545* with subject: Nantahala and Pisgah National Forests Plan Revision Objection. Electronic submissions must be submitted in a format (Word, PDF, or Rich Text) that is readable and searchable with optical character recognition software.
- *By Fax:* 828–257–4863. Faxes must be addressed to ''Objection Coordinator.'' The fax coversheet should include a subject line with ''Nantahala and Pisgah National Forests Plan Revision Objection'' or ''Nantahala and Pisgah NFs Species of Conservation Concern'' and specify the number of pages being submitted.

FOR FURTHER INFORMATION CONTACT: Forest Planner, Michelle Aldridge at (828) 707–8391 or *michelle.aldridge@usda.gov.*

Individuals who use telecommunication devices for the deaf/hard-of-hearing (TDD) may call the Federal Relay Service (FRS) at 1–800–877–8339, 24 hours a day, every day of the year, including holidays.

SUPPLEMENTARY INFORMATION: The decision to approve the revised Forest Plan and the Regional Forester's list of species of conservation concern for the Nantahala and Pisgah National Forests will be subject to the objection process identified in 36 CFR part 219 Subpart B (219.50 to 219.62).

How To File an Objection

Objections must be submitted to the Reviewing Officer at the address shown in the **ADDRESSES** section of this notice. An objection must include the following (36 CFR 219.54(c)):

(1) The objector's name and address along with a telephone number or email address if available. In cases where no identifiable name is attached to an objection, the Forest Service will attempt to verify the identity of the objector to confirm objection eligibility;

(2) Signature or other verification of authorship upon request (a scanned signature for electronic mail may be filed with the objection);

(3) Identification of the lead objector, when multiple names are listed on an objection. The Forest Service will communicate to all parties to an objection through the lead objector. Verification of the identity of the lead objector must also be provided if requested;

(4) The name of the plan, plan amendment, or plan revision being objected to, and the name and title of the responsible official;

(5) A statement of the issues and/or parts of the plan, plan amendment, or plan revision to which the objection applies;

(6) A concise statement explaining the objection and suggesting how the draft plan decision may be improved. If the objector believes that the plan, plan amendment, or plan revision is inconsistent with law, regulation, or policy, an explanation should be included;

(7) A statement that demonstrates the link between the objector's prior substantive formal comments and the content of the objection, unless the objection concerns an issue that arose after the opportunities for formal comment; and

(8) All documents referenced in the objection (a bibliography is not sufficient), except the following need not be provided:

a. All or any part of a Federal law or regulation,

b. Forest Service Directive System documents and land management plans or other published Forest Service documents,

c. Documents referenced by the Forest Service in the planning documentation related to the proposal subject to objection, and

d. Formal comments previously provided to the Forest Service by the objector during the proposed plan, plan amendment, or plan revision comment period.

It is the responsibility of the objector to ensure that the Reviewing Officer receives the objection in a timely manner. The regulations generally prohibit extending the length of the

objection filing period (36 CFR 219.56(d)). However, when the time period expires on a Saturday, Sunday, or a Federal holiday, the time is extended to the end of the next Federal working day (11:59 p.m. for objections filed by electronic means such as email or facsimile machine) (36 CFR 219.56).

Responsible Official

The responsible official who will approve the ROD and the revised Forest Plan for the Nantahala and Pisgah National Forests is Forest Supervisor James Melonas, National Forests in North Carolina, 160 Zillicoa Street, Suite A, Asheville, NC 28801, and Phone: (828) 257–4200. The responsible official for the list of species of conservation concern is Regional Forester Ken Arney, USDA Forest Service Southern Region, 1720 Peachtree Road NW, Suite 760S, Atlanta, GA 30309.

The Regional Forester is the reviewing officer for the revised Forest Plan since the Forest Supervisor is the responsible official (36 CFR 219.56(e)). The decision to approve the species of conservation concern list will be subject to a separate objection process. The Chief of the Forest Service is the reviewing officer for species of conservation concern identification since the Regional Forester is the responsible official (36 CFR 219.56(e)(2)). This authority may be delegated to an individual Deputy Chief or Associate Deputy Chief for National Forest System, consistent with delegations of authority provided in the Forest Service Manual at sections 1235.4 and 1235.5.

Dated: January 14, 2022.

Barnie Gyant,

Associate Deputy Chief, National Forest System.

[FR Doc. 2022–01165 Filed 1–20–22; 8:45 am]

BILLING CODE 3411–15–P

COMMISSION ON CIVIL RIGHTS

Sunshine Act Meetings

TIME AND DATE: Friday, January 21, 2022, 12:00 p.m. EST.

PLACE: Meeting to take place by telephone and is open to the public by telephone: 800–259–2693, Conference ID #: 3653553.

STATUS: Open to the public.

MATTERS TO BE CONSIDERED: Commission business for the month of January.

CONTACT PERSON FOR MORE INFORMATION: Angelia Rorison: 202–376–7700; *publicaffairs@usccr.gov.*

Dated: January 19, 2022.

Angelia Rorison,

USCCR Media and Communications Director.

[FR Doc. 2022–01277 Filed 1–19–22; 4:15 pm]

BILLING CODE 6335–01–P

COMMISSION ON CIVIL RIGHTS

Notice of Public Meeting of the Connecticut Advisory Committee

AGENCY: Commission on Civil Rights.

ACTION: Announcement of meeting.

SUMMARY: Notice is hereby given, pursuant to the provisions of the rules and regulations of the U.S. Commission on Civil Rights (Commission), and the Federal Advisory Committee Act (FACA), that the Connecticut Advisory Committee to the U.S. Commission on Civil Rights will hold a fourth briefing via web conference or phone call on Monday, February 14, 2022, at 4:00 p.m. (ET). The purpose of the web conference is to hear from advocates and the general public on zoning in Connecticut.

DATES: February 14, 2022, Monday, at 4:00 p.m. (ET).

ADDRESSES:

Join by Web Conference: WebEx link: *https://bit.ly/3Go1YmT;* password, if needed: USCCR–CT

Join by Phone Only, Dial: 1–800–360–9505; Access Code: 2764 658 4408#

FOR FURTHER INFORMATION CONTACT: Barbara Delaviez at *ero@usccr.gov* or by phone at 202–539–8246.

SUPPLEMENTARY INFORMATION: This meeting is available to the public through the WebEx link and/or phone number/access code above. If joining only via phone, callers can expect to incur charges for calls they initiate over wireless lines, and the Commission will not refund any incurred charges. Individuals who are deaf, deafblind and hard of hearing. may also follow the proceedings by first calling the Federal Relay Service at 1–800–877–8339 and providing the Service with the call-in number found through registering at the web links provided for these meeting.

Members of the public are entitled to make comments during the open period at the end of the meeting. Members of the public may also submit written comments; the comments must be received in the Regional Programs Unit within 30 days following the meeting. Written comments may be emailed to Barbara de La Viez at *ero@usccr.gov.* Persons who desire additional information may contact the Regional Programs Unit at (202) 539–8246. Records and documents discussed during the meeting will be available for public viewing as they become available at *www.facadatabase.gov.* Persons interested in the work of this advisory committee are advised to go to the Commission's website, *www.usccr.gov,* or to contact the Regional Programs Unit at the above phone number or email address.

Agenda: Monday, February 14, 2022, at 4:00 p.m. (ET)

I. Welcome and Roll Call
II. Web Conference Four on Zoning
III. Public Comment
IV. Next Steps
V. Adjournment

Dated: January 14, 2022.

David Mussatt,

Supervisory Chief, Regional Programs Unit.

[FR Doc. 2022–01119 Filed 1–20–22; 8:45 am]

BILLING CODE P

COMMISSION ON CIVIL RIGHTS

Notice of Public Meetings of the Kansas Advisory Committee

AGENCY: U.S. Commission on Civil Rights.

ACTION: Announcement of meeting.

SUMMARY: Notice is hereby given, pursuant to the provisions of the rules and regulations of the U.S. Commission on Civil Rights (Commission) and the Federal Advisory Committee Act that the Kansas Advisory Committee (Committee) will hold a meeting via web conference on, January 25, 2022, at 12:00 p.m. Central Time. The purpose of the meeting is for the committee to discuss potential panelists for the upcoming briefing(s) on voting.

DATES: The meetings will be held on:

- Tuesday, January 25, 2022, at 12:00 p.m. Central Time, *https://civilrights.webex.com/civilrights/j.php?MTID=ma4e9e35426382d8497f48244f64b83c8,* or Join by phone: 800–360–9505 USA Toll Free, Access code: 2762 080 6634.

FOR FURTHER INFORMATION CONTACT: David Barreras, Designated Federal Officer, at *dbarreras@usccr.gov* or (202) 656–8937.

SUPPLEMENTARY INFORMATION: Members of the public may listen to this discussion through the above call-in number. An open comment period will be provided to allow members of the public to make a statement as time allows. Callers can expect to incur regular charges for calls they initiate over wireless lines, according to their wireless plan. The Commission will not refund any incurred charges. Individuals who are deaf, deafblind and

hard of hearing may also follow the proceedings by first calling the Federal Relay Service at 1–800–877–8339 and providing the Service with the conference call number and conference ID number.

Members of the public are entitled to submit written comments; the comments must be received in the regional office within 30 days following the meeting. Written comments may be emailed to David Barreras at *dbarreras@usccr.gov.*

Records generated from this meeting may be inspected and reproduced at the Regional Programs Unit Office, as they become available, both before and after the meeting. Records of the meeting will be available via *www.facadatabase.gov* under the Commission on Civil Rights, Kansas Advisory Committee link. Persons interested in the work of this Committee are directed to the Commission's website, *https://www.usccr.gov,* or may contact the Regional Programs Unit at the above email or street address.

Agenda

I. Welcome & Roll Call
II. Chair's Comments
IV. Committee Discussion
V. Next Steps
VI. Public Comment
VII. Adjournment

Exceptional Circumstance: Pursuant to 41 CFR 102–3.150, the notice for this meeting is given fewer than 15 calendar days prior to the meeting because of the exceptional circumstances of pending expiration of Committee member appointment terms.

Dated: January 18, 2022.

David Mussatt,

Supervisory Chief, Regional Programs Unit.

[FR Doc. 2022–01182 Filed 1–20–22; 8:45 am]

BILLING CODE 6335–01–P

DEPARTMENT OF COMMERCE

Office of the Secretary

[Docket No. 220112–0012]

Department of Commerce's Identification of Federal Financial Assistance Infrastructure Programs Subject to the Build America, Buy America Provisions of the Infrastructure Investment and Jobs Act

AGENCY: Office of the Secretary, Department of Commerce.

ACTION: Notice of availability of Department of Commerce's Identification of Federal Financial Assistance Infrastructure Programs Subject to the Build America, Buy America Provisions of the Infrastructure Investment and Jobs Act report.

SUMMARY: The Department of Commerce (DOC) is publishing a report on DOC federal financial assistance infrastructure programs subject to the Build America, Buy America Act Provisions of the Infrastructure Investment and Jobs Act (Pub. L. 117–58). The report is entitled ''Department of Commerce's Identification of Federal Financial Assistance Infrastructure Programs Subject to the Build America, Buy America Provisions of the Infrastructure Investment and Jobs Act.''

DATES: The DOC report will be available to the public on January 21, 2022.

ADDRESSES: The ''Department of Commerce's Identification of Federal Financial Assistance Infrastructure Programs Subject to the Build America, Buy America Provisions of the Infrastructure Investment and Jobs Act'' report is accessible at: *https://www.commerce.gov/oam/policy/financial-assistance-policy.* Members of the public who are unable to access the report electronically may request a copy of the report from DOC's Information Contact identified below.

FOR FURTHER INFORMATION CONTACT: Questions regarding the report should be directed to John Geisen, Financial Assistance Policy and Oversight Division Director at 202–482–4248 or *jgeisen@doc.gov.*

SUPPLEMENTARY INFORMATION: On November 15, 2021, President Biden signed into law the Infrastructure Investment and Jobs Act (IIJA), which includes the ''Build America, Buy America Act'' (Act). The Act ensures that Federal infrastructure programs require the use of materials produced in the United States, increases the requirement for American-made content, and strengthens the waiver process associated with Buy American provisions. The Act requires that within 60 days of its enactment, January 14, 2022, each federal agency must submit to the Office of Management and Budget and Congress a report (60-day report) listing all Federal financial assistance programs for infrastructure administered by the agency. In these 60-day reports, agencies are required to identify and provide a list of which of these programs are ''deficient,'' as defined in the Act. These agency reports must also be published in the **Federal Register**.

The DOC report satisfies the requirements of section 70913 of the Act and is accessible at: *https://www.commerce.gov/oam/policy/financial-assistance-policy.*

Barry E. Berkowitz,

Senior Procurement Executive and Director, Office of Acquisition Management.

[FR Doc. 2022–01103 Filed 1–20–22; 8:45 am]

BILLING CODE P

DEPARTMENT OF COMMERCE

[RTID 0648–XB398]

Review and Comment of National Oceanic and Atmospheric Administration Tribal Consultation Policy and Procedures: Extension of Public Comment Period

AGENCY: National Oceanic and Atmospheric Administration (NOAA), Commerce.

ACTION: Notice; extension of public comment period.

SUMMARY: NOAA is extending the public comment period associated with its request for information (RFI) on its policies and guidance documents for government-to-government consultation with federally recognized Indian Tribes. The RFI was published in the **Federal Register** on Wednesday, November 24, 2021. The public comment period on the RFI was originally scheduled to end January 24, 2022. NOAA is extending that comment period by 30 days and will now consider comments received through February 24, 2022.

DATES: The deadline for receipt of comments on the RFI published on November 24, 2021 (83 FR 26009), is extended by 30 days to February 24, 2022.

ADDRESSES: Responses should be submitted via email to *heather.sagar@noaa.gov.* Include ''NOAA Tribal Consultation Policy'' in the subject line of the message.

Instructions: Response to this request for information (RFI) is voluntary. Email attachments will be accepted in plain text, Microsoft Word, or Adobe PDF formats only. Each individual or institution is requested to submit only one response. NOAA may post responses to this RFI, without change, on a Federal website. It is, therefore, requested that no business proprietary information, copyrighted information, or personally identifiable information be submitted in response to this RFI. Please note that the U.S. Government will not pay for response preparation, or for the use of any information contained in the response.

FOR FURTHER INFORMATION CONTACT: Heather Sagar, *heather.sagar@noaa.gov,* (301) 427–8019.

SUPPLEMENTARY INFORMATION: On Wednesday, November 24, 2021, NOAA published an RFI seeking comments from Tribal Nations, Tribal officials, members of the public, and other interested parties to help identify appropriate updates or revisions to the following NOAA policies and guidance documents, which facilitate NOAA's implementation of E.O. 13175: (1) Tribal Consultation Handbook titled *NOAA Procedures for Government-to-Government Consultation With Federally Recognized Indian Tribes and Alaska Native Corporations (2013);* (2) NOAA Administrative Order 218–8 titled *Policy on Government-to-Government Consultation with Federally Recognized Indian Tribes and Alaska Native Corporations (Reaffirmed in 2018);* and (3) a traditional ecological knowledge (TEK) guidance currently titled *NOAA Fisheries and National Ocean Service Guidance and Best Practices for Engaging and Incorporating Traditional Ecological Knowledge in Decision-Making (2019).* NOAA proposes revisions to its Tribal Consultation Handbook to reflect lessons learned and improved practices to better facilitate meaningful and effective tribal consultations. NOAA also proposes minor revisions to Administrative Order 218–8 to reflect necessary updates since its issuance in 2014. We are also seeking comments on the existing TEK Guidance, which has not been previously made available for public comment. Though the TEK Guidance is only currently implemented by NOAA Fisheries and the National Ocean Service, NOAA is now extending the applicability of the TEK Guidance to all NOAA Offices. NOAA is interested in whether updates or revisions are appropriate for this TEK Guidance, including terminology. Updates or revisions to NOAA's Tribal Consultation Handbook, Administrative Order, and TEK Guidance will be informed by the input we receive from federally recognized Indian Tribes, the public, and other interested parties.

NOAA has decided to extend the public comment period on the RFI by 30 days to Thursday, February 24, 2022, to allow opportunity for the public to continue to provide information on these important documents. All three documents can be viewed at this NOAA website: *https://www.noaa.gov/legislative-and-intergovernmental-affairs/noaa-tribal-resources-updates.*

Dated: January 14, 2022.

Richard W. Spinrad,

Under Secretary of Commerce for Oceans and Atmosphere and NOAA Administrator.

[FR Doc. 2022–01118 Filed 1–20–22; 8:45 am]

BILLING CODE 3510–12–P

DEPARTMENT OF COMMERCE

National Oceanic and Atmospheric Administration

[RTID 0648–XB707]

Marine Mammals; Issuance of Permits

AGENCY: National Marine Fisheries Service (NMFS), National Oceanic and Atmospheric Administration (NOAA), Commerce.

ACTION: Notice; issuance of permits.

SUMMARY: Notice is hereby given that individuals and institutions have been issued Letters of Confirmation (LOCs) for activities conducted under the General Authorization for Scientific Research on marine mammals. See **SUPPLEMENTARY INFORMATION** for a list of names and addresses of recipients.

ADDRESSES: The LOCs and related documents are available for review upon written request via email to *NMFS.Pr1Comments@noaa.gov.*

FOR FURTHER INFORMATION CONTACT: Amy Hapeman (LOC Nos. 24033, 25471, 25529, and 25638), Carrie Hubard (LOC Nos. 20346, 24045, 24067, 25527, and 25574), Erin Markin (LOC No. 23796), Shasta McClenahan, Ph.D. (LOC No. 23069), Courtney Smith, Ph.D. (LOC Nos. 19540 and 22587), and Sara Young (LOC Nos. 20386, 25751 and 25811) at the email listed above or 301–427–8401.

SUPPLEMENTARY INFORMATION: The requested LOCs have been issued under the authority of the Marine Mammal Protection Act of 1972, as amended (16 U.S.C. 1361 *et seq.*), and the regulations governing the taking and importing of marine mammals (50 CFR part 216). The General Authorization allows for bona fide scientific research that may result only in taking by Level B harassment of marine mammals. The following LOCs were issued in Fiscal Year 2021 (October 1, 2020–September 30, 2021).

File No. 24033: Issued to Eric Montie, Ph.D., University of South Carolina Beaufort, One University Boulevard, Bluffton, South Carolina 29909, on October 23, 2020. This LOC authorizes vessel-based surveys for behavioral observations, photo-identification, passive acoustics, and photography/videography of bottlenose dolphins (*Tursiops truncatus*) in the coastal waters of Bluffton and Hilton Head, South Carolina. The objectives of the research are to better understand the acoustic ecology of bottlenose dolphins and their prey and to estimate the carrying capacity of bottlenose dolphins in South Carolina and its relation to water quality. The LOC replaces No. 20066 on April 1, 2021 and expires on March 31, 2026.

File No. 24067: Issued to Jacqueline Bucsa, George Mason University, 1450 Exploratory Hall, Fairfax, Virginia 22030, on January 28, 2021. This LOC authorizes vessel-based surveys for behavioral observations and photo-identification of bottlenose dolphins in the lower Chesapeake Bay and coastal waters of Virginia. The objectives of the research are to develop an understanding of prey selection by bottlenose dolphins, specifically mother-calf pairs, and to examine how they meet their unique, high energy demands. The LOC expires on January 31, 2023.

File No. 24045: Issued to Jeremy Kiszka, Ph.D., Florida International University, 3000 NE 151st Street, Marine Science Building, Room 250D, North Miami, Florida 33181 on February 10, 2021. This LOC authorizes vessel-based surveys for photo-identification, photography, videography, and behavioral observations of bottlenose and Atlantic spotted (*Stenella frontalis*) dolphins. Research may occur in Biscayne Bay and coastal waters of Broward and Miami Dade counties, Florida out to 200 m depth. The objectives of the research are to examine the distribution, behavior and abundance of dolphins in the study area. The LOC expires on February 10, 2024.

File No. 23069: Issued to Florida Atlantic University's Harbor Branch Oceanographic Institute, 777 Glades Road, Boca Raton, Florida 33431 (Responsible Party [RP]: Daniel Flynn, Ph.D.; Principal Investigator [PI]: Steven Burton) on March 16, 2021. This LOC authorizes monthly vessel-based photo-identification and observational surveys of cetaceans in Florida for research projects involving cetacean biology, ecology, behavior, social structure, health, and anthropogenic activities. The authorized research area includes intercoastal and coastal waters of Florida from Sebastian Inlet to Jupiter Inlet, including the Indian River Lagoon and the Atlantic Ocean. Authorized species include Atlantic spotted, bottlenose, pantropical spotted (*Stenella attenuata*), Risso's (*Grampus griseus*), and rough-toothed (*Steno bredanensis*) dolphins; and humpback (*Megaptera novaeangliae*), long-finned pilot (*Globicephala macrorhynchus*), pygmy

sperm (*Kogia breviceps*), and short-finned pilot (*G. melas*) whales. The LOC expires on March 31, 2026.

File No. 23796: Issued to Quincy Gibson, Ph.D., University of North Florida, 1 UNF Drive, Jacksonville, Florida 32266, on March 17, 2021. This LOC authorizes vessel-based research surveys to include close approach, photo-identification, behavioral observations, videography, passive acoustic recording, and focal follows of bottlenose dolphins within estuarine waters of Northeast Florida. Specifically, the authorized area includes the inland waterways of the St. Johns River from the river mouth at Mayport to approximately 40 kilometers upriver to Hart Bridge and the Intracoastal Waterway from the Florida-Georgia border at St. Mary's Inlet south to Palm Valley Bridge in Ponte Vedra, Florida. The objective of the research is to continue a 10-year photo-identification study of bottlenose dolphins, focusing on biology, ecology, behavior, social structure, and health. The LOC expires on March 31, 2026.

File No. 20386: This LOC, held by Golden Gate Cetacean Research, 9 Edgemar Way, Corte Madera, California 94925 (RP: William Keener, J.D.; PI: Isidore Szczepaniak), was extended on March 30, 2021, for one year. The LOC authorizes vessel surveys for close-approach, photo-identification, and behavioral observations of harbor porpoises (*Phocoena phocoena*) and bottlenose dolphins in Monterey Bay through northern California waters, including San Francisco Bay, and Kachemak Bay, Alaska. The purpose of the research is to collect photographic and observational data on the distribution and occurrence of harbor porpoise in San Francisco Bay and to track the movements of California coastal bottlenose dolphins to the northern limits of their range, as well as conduct a comparative study with harbor porpoises in Kachemak Bay, Alaska. The objectives of the research will not change. The extended LOC expires on July 31, 2022.

File No. 25471: Issued to Andrew Read, Ph.D., Duke University, 135 Duke Marine Lab Rd., Beaufort, NC 28516, on April 02, 2021. This LOC authorizes vessel-based surveys for close approach, photo-identification, behavioral observations, and focal follows for 22 species of cetaceans: Atlantic spotted, bottlenose, clymene (*Stenella clymene*), common short-beaked (*Delphinus delphis*), Fraser's (*Lagenodelphis hosei*), pantropical spotted, rough-toothed, Risso's, rough-toothed, spinner (*Stenella longirostris*), and striped (*Stenella coeruleoalba*) dolphins; harbor porpoise; Cuvier's (*Ziphius cavirostris*) and *Mesoplodon* spp. beaked whales; dwarf (*Kogia sima*) and pygmy (*Kogia breviceps*) sperm whales; and false killer (*Pseudorca crassidens*), killer (*Orcinus orca*), melon-headed (*Peponocephala electra*), minke whale (*Balaenoptera acutorostrata*), pygmy killer (*Feresa attenuata*), and short- and long-finned pilot whales. Research may occur in waters off the Florida/Georgia border, the South Carolina/North Carolina border, and from Cape Hatteras, North Carolina up to Norfolk Canyon, Virginia. The objective of the research is to provide baseline data on the density, abundance, distribution, behavior and seasonal movements of cetaceans. The LOC replaces No. 19903 on May 1, 2021 and expires on April 30, 2026.

File No. 25529: Issued to Maddalena Bearzi, Ph.D., Ocean Conservation Society, P.O. Box 12860, Marina del Ray, California 90295, on April 6, 2021, to take effect on August 16, 2021. This LOC authorizes vessel surveys of 17 species of marine mammals for close approach, counts, photo-identification, photography/videography, underwater photography/videography, behavioral observations, and focal follows within Santa Monica Bay and adjacent California waters. Species include: Bottlenose dolphins, California sea lions (*Zalophus californianus*), Dall's porpoise (*Phocoenoides dalli*), Eastern North Pacific gray whales (*Eschrichtius robustus*), harbor porpoises, harbor seals (*Phoca vitulina*), killer whales, long-beaked common dolphins (*Delphinus capensis*), minke whales, northern elephant seals (*Mirounga angustirostris*), northern right whale dolphins (*Lissodelphis borealis*), Pacific white-sided dolphins (*Lagenorhynchus obliquidens*), Risso's dolphins, short-beaked common dolphins, short-finned pilot whales, and striped dolphins. The objective of the research is to continue the long-term study of the biology and ecology of marine mammals in the action area. The LOC expires on August 1, 2026.

File No. 19540: This LOC, held by Shannon Gowans, Ph.D., Eckerd College, 4200 54th Avenue South, St. Petersburg, Florida 33711, was extended on May 28, 2021, for approximately one year. The LOC authorizes vessel-based behavioral observations, photo-identification, and passive acoustic recording of bottlenose, rough-toothed, and Atlantic spotted dolphins in Tampa Bay and its surrounding waters. The objectives of the research will not change. The extended LOC expires on May 31, 2022.

File No. 25527: Issued to Zach McKenna, St. Augustine Dolphin Research, 1093 A1a Beach Blvd. #430, St. Augustine, Florida 32080, on June 1, 2021. This LOC authorizes vessel-based surveys for close approach, photo-identification, behavioral observations, videography, and passive acoustic recordings of bottlenose dolphins. Research may occur in inland Florida waters from the St. Johns River-Intracoastal Waterway boundary south to Marineland. The objectives of the research are to identify and refine dolphin stock units in Florida, assess regional population biology and behavioral ecology, and document dolphin survival threats (*e.g.,* human-caused entanglements and injuries). The LOC expires on May 31, 2026.

File No. 25638: Issued to Clearwater Marine Aquarium (PI: Lisa Oliver), 249 Windward Passage, Clearwater, Florida 33767, on July 6, 2021. This LOC authorizes vessel and aerial-based surveys on bottlenose dolphins for acoustic, passive recording, photo-identification, behavioral observations, count/survey, and photography/videography. Research may occur in the estuarine and coastal waters of West Central Florida. The objective of the research is to continue a longitudinal study on the home ranges, distribution, population abundance, site fidelity, and reproductive success of bottlenose dolphins. The LOC expires on July 15, 2026.

File No. 22587: Issued to Dolphin Research Center (PI: Armando Rodriguez), P.O. Box 522875, Marathon Shores, FL 33052, on August 4, 2021. This amended LOC (No. 22587–01) authorizes the use of unmanned aerial systems (UAS) for breath sampling, photography, and photogrammetry of bottlenose dolphins in the middle Florida Keys. The new objective of the research is to enhance the current vessel-based photo-identification field study by collecting morphometric and DNA information of dolphins. The LOC expires on February 15, 2024.

File No. 25751: Issued to Shoals Marine Laboratory (PI: Andrea Bogomolni, Ph.D.), University of New Hampshire, 24 Colovos Road, Durham, New Hampshire 03824, on August 24, 2021. This LOC authorizes vessel surveys, photo-identification, counts, and behavioral and monitoring observations of gray (*Halichoerus grypus*) and harbor seals in Maine and New Hampshire waters. The objectives of the research are to monitor changes in number and distribution of seals, re-sight of unique individuals, document use of the area by mother-pup pairs, visually assess health of individuals, and monitor the effects of human

disturbance on seals. The LOC expires on August 31, 2026.

File No. 25811: Issued to the Naval Facilities Engineering Systems Command Atlantic (RP: Deanna Rees; PI: Danielle Jones), 6506 Hampton Boulevard, Norfolk, Virginia 23508. This LOC authorizes close approach, counts, unintentional disturbance, photo-identification, photography/videography, and behavioral observations of harbor and gray seals via vessel surveys, ground surveys, and UAS along the coast of Virginia. Harp seals may be observed during research. The objective of the research is to collect data on pinniped occurrence, movement, habitat use, and haul-out patterns at known haul-out areas near the lower Chesapeake Bay and the Eastern Shore, Virginia. The LOC expires on September 30, 2026.

File No. 20346: This LOC, held by Ann Weaver, Ph.D., Good-natured Statistics Consulting, P.O. Box 8732, St Petersburg, Florida 33738, was extended on September 13, 2021, while the holder's new application (File No. 25957) is in process. The LOC authorizes vessel-based research of bottlenose dolphins, including abundance surveys, behavioral observations, photography and video in and around a 6.5-mile stretch of the Intracoastal Waterway near John's Pass, Florida. The objectives of the research would not change. The extended LOC expires on September 1, 2022, or until a decision is made on the new application, whichever occurs first.

File No. 25574: Issued to Wendy Noke Durden, Hubbs-Sea World Research Institute, 3830 South Highway A1A #4–181, Melbourne Beach, Florida 32951, on September 23, 2021. This LOC authorizes vessel-based surveys and UAS flights for photo-identification, behavioral observations, focal follows, passive acoustic recordings, and breath sampling of bottlenose dolphins. Research may occur in the inland waters along the east coast of Florida from northernmost limits of Flagler County to Jupiter Inlet, including the Indian River Lagoon, with a focus on Mosquito Lagoon and the Halifax River estuary. The objective of the research is to evaluate the abundance, stock association, distribution, residency, social structure, population dynamics, habitat use, health, demography, behavior, anthropogenic interactions, and contact calls of dolphins within the study area. The LOC expires on September 30, 2026.

File No. 25895: Issued to Jacalyn Sullivan, Stockton University, 101 Vera King Farris Drive, Galloway, New Jersey 08205, on October 29, 2021. This LOC authorizes UAS surveys of harbor seals for count/survey, behavioral observation monitoring, photo-identification, and videography. The objective of the research is to determine temporal patterns of harbor seal habitat use in Great Bay, New Jersey, population size, and shifts over time as a nearby wind farm becomes operational. The LOC expires on October 31, 2026.

File No. 25835: Issued to Tampa Bay Watch (PI: Savannah Gandee), 3000 Pinellas Bayway South, Tierra Verde, Florida 33715, on December 21, 2021. This LOC authorizes vessel-based surveys of bottlenose dolphins for behavioral observations, photo-identification, passive acoustics, count/survey, and photography/videography in Tampa Bay. The objective of the research is to provide an updated account of the common bottlenose dolphin population that utilizes understudied regions of Tampa Bay for management and conservation purposes. The LOC expires on December 31, 2021.

In compliance with the National Environmental Policy Act of 1969 (42 U.S.C. 4321 *et seq.*), a final determination has been made that the activities are categorically excluded from the requirement to prepare an environmental assessment or environmental impact statement.

Dated: January 7, 2022.

Julia M. Harrison,

Chief, Permits and Conservation Division, Office of Protected Resources, National Marine Fisheries Service.

[FR Doc. 2022–00496 Filed 1–20–22; 8:45 am]

BILLING CODE 3510–22–P

DEPARTMENT OF COMMERCE

National Oceanic and Atmospheric Administration

Review of Nomination for Hudson Canyon National Marine Sanctuary

AGENCY: Office of National Marine Sanctuaries (ONMS), National Ocean Service (NOS), National Oceanic and Atmospheric Administration (NOAA), Department of Commerce (DOC).

ACTION: Notice; request for written comments.

SUMMARY: The National Oceanic and Atmospheric Administration (NOAA) is seeking written comments on its five-year review of the nomination for Hudson Canyon National Marine Sanctuary (NMS). Comments should focus solely on any new and relevant information relating to NOAA's 11 sanctuary nomination evaluation criteria. NOAA will pay particular attention to any additional details about the significance of the area's natural or cultural resources, changes to any threats to these resources, and evolving management efforts, or human uses in the proposed area (*e.g.,* wind energy proposals in the area). NOAA will make a final determination on whether the Hudson Canyon NMS nomination remains relevant and responsive to the evaluation criteria after it analyzes the comments it receives and, if so, whether Hudson Canyon NMS is to remain in the nomination inventory for another five-year period. With this five-year review, NOAA is not seeking comments on whether to start the sanctuary designation process for the Hudson Canyon NMS proposal.

DATES: Comments are due by February 7, 2022.

ADDRESSES: Comments may be submitted by one of the following methods:

- *Federal eRulemaking Portal: https://www.regulations.gov.* Submit electronic comments via the Federal eRulemaking Portal and search for Docket Number NOAA–NOS–2022–0010.
- *Mail:* LeAnn Hogan, Regional Operations Coordinator, NOAA Sanctuaries Eastern Region, 1305 East West Highway, N/NMS, Silver Spring, MD 20910.

Email: LeAnn.Hogan@noaa.gov.

Instructions: All comments received are a part of the public record. All personally identifiable information (for example, name and address) voluntarily submitted by the commenter may be publicly accessible. Do not submit confidential business information or otherwise sensitive or protected information. NOAA will accept anonymous comments (enter N/A in the required fields to remain anonymous).

FOR FURTHER INFORMATION CONTACT: LeAnn Hogan, Regional Operations Coordinator, NOAA Sanctuaries Eastern Region, 1305 East-West Highway, N/NMS, Silver Spring, MD 20910, or at *LeAnn.Hogan@noaa.gov,* or 202–731–0678.

SUPPLEMENTARY INFORMATION:

Background Information

In June 2014, NOAA issued a final rule establishing the sanctuary nomination process (SNP), which details how communities may submit nominations to NOAA for consideration of national marine sanctuary designation (79 FR 33851). NOAA moves successful nominations to an inventory of areas that could be considered for national marine

sanctuary designation. The final rule establishing the SNP included a five-year limit on any nomination added to the inventory that NOAA does not advance for designation.

In November 2019, NOAA issued a **Federal Register** notice (84 FR 61546) to clarify procedures for evaluating and updating a nomination as it approaches the five-year mark on the inventory of areas that could be considered for national marine sanctuary designation. This notice explained that if a nomination remains responsive to the evaluation criteria for inclusion on the inventory, NOAA could keep the nomination on the inventory for another five years. The notice also established a process for NOAA to consider the continuing viability of nominations nearing the five-year expiration mark. The nomination for Hudson Canyon proposal is scheduled to expire in February 2022. The full nomination can be found at *https://nominate.noaa.gov/nominations/.*

NOAA is not proposing to designate Hudson Canyon as a national marine sanctuary with this action. Instead, comments should identify any new or changing information relative to NOAA's 11 sanctuary nomination evaluation criteria (*https://nominate.noaa.gov/guide.html*). Comments that do not pertain to information supporting the evaluation criteria, or present new information on the Hudson Canyon NMS nomination, will not be considered in NOAA's decision on whether to retain this nomination in the inventory.

Should NOAA conclude that the Hudson Canyon NMS nomination no longer meets its evaluation criteria and decide to remove it from the inventory, NOAA would notify the nominator directly via letter, and the public via notice in the **Federal Register** and a web posting at ''*nominate.noaa.gov.*''

Authority: 16 U.S.C. 1431 *et seq.*

John Armor,

Director, Office of National Marine Sanctuaries, National Ocean Service, National Oceanic and Atmospheric Administration

[FR Doc. 2022–01085 Filed 1–20–22; 8:45 am]

BILLING CODE 3510–NK–P

DEPARTMENT OF COMMERCE

National Oceanic and Atmospheric Administration

Review of Nomination for Mariana Trench National Marine Sanctuary

AGENCY: Office of National Marine Sanctuaries (ONMS), National Ocean Service (NOS), National Oceanic and Atmospheric Administration (NOAA), Department of Commerce (DOC).

ACTION: Notice; request for written comments.

SUMMARY: The Office of National Marine Sanctuaries (ONMS) of the National Oceanic and Atmospheric Administration (NOAA) is requesting written comments to facilitate ONMS' five-year review of the nomination for the Mariana Trench National Marine Sanctuary (NMS) at the five-year interval. In particular, NOAA is requesting relevant information as it pertains to its 11 evaluation criteria for inclusion in the inventory. In this five-year review, NOAA will pay particular attention to any new information about the significance of the area's natural or cultural resources, changes to any threats to these resources, and any updates to the management framework of the area. NOAA has provided the original nominating parties, The Pew Charitable Trusts and Friends of the Marianas Trench, an opportunity to share their views on these same questions. Following this information gathering and internal analysis, NOAA will make a final determination on whether or not the Mariana Trench NMS nomination will remain in the inventory for another five-year period.

DATES: Written comments must be received by February 22, 2022. NOAA will conduct a virtual meeting on Saturday, February 12, 2022, from 10 a.m.–12 p.m. ChST (Guam/Commonwealth of the Northern Mariana Islands)/Friday, February 11, 2022, from 2 p.m.–4 p.m. HST (Hawai'i). NOAA may end the meeting before the time noted above if all those participating have completed their oral comments.

ADDRESSES: Comments may be submitted by one of the following methods:

- *Federal eRulemaking Portal: https://www.regulations.gov.* Submit electronic comments via the Federal eRulemaking Portal and search for Docket Number NOAA–NOS–2022–0005.
- *Mail:* Kristina Kekuewa, Pacific Islands Regional Director, NOAA Office of National Marine Sanctuaries, 1845 Wasp Blvd., Honolulu, Hawaii 96818.
- *Email: Kristina.Kekuewa@noaa.gov.*
- *Public Scoping Meeting:* Provide oral comments during a virtual public scoping meeting, as described under **DATES**. Webinar registration details and additional information about how to participate in the public scoping meeting is available at *https://nominate.noaa.gov/5-year-review.html.*

Instructions: All comments received are a part of the public record. All personal identifying information (for example, name and address) voluntarily submitted by the commenter may be publicly accessible. Do not submit confidential business information or otherwise sensitive or protected information. NOAA will accept anonymous comments (enter N/A in the required fields to remain anonymous).

FOR FURTHER INFORMATION CONTACT: Kristina Kekuewa, Pacific Islands Regional Director, NOAA Office of National Marine Sanctuaries, 1845 Wasp Blvd., Honolulu, Hawaii 96818, or at *kristina.kekuewa@noaa.gov,* or at 808–725–5252.

SUPPLEMENTARY INFORMATION:

Background Information

In 2014, NOAA issued a final rule re-establishing the sanctuary nomination process (SNP), which details how communities may submit nominations of areas of the marine and Great Lakes environment for NOAA to consider for designation as national marine sanctuaries (79 FR 33851). NOAA moves successful nominations to an inventory of areas that could be considered for national marine sanctuary designation. The final rule re-establishing the SNP included a five-year limit on any nomination added to the inventory that NOAA does not advance for designation.

In November 2019, NOAA issued a **Federal Register** notice (84 FR 61546) to clarify procedures for evaluating and updating a successful nomination as it approaches the five-year mark in the inventory of areas that could be considered for national marine sanctuary designation. This notice explained that if a nomination remains responsive to the evaluation criteria for inclusion in the inventory, it may be appropriate to allow the nomination to remain in the inventory for another five years. The notice also established a process for NOAA to consider the continuing viability of nominations nearing the five-year expiration mark.

The nomination for Mariana Trench NMS was accepted to the national inventory on March 13, 2017, and is therefore scheduled to expire on March 13, 2022. The full nomination can be found at *https://nominate.noaa.gov/nominations/.*

NOAA is not proposing to designate the Mariana Trench NMS with this action. Instead, NOAA is seeking public comment on ONMS' five-year review of the nomination for Mariana Trench NMS. Accordingly, written comments submitted as part of this request should

not focus on whether NOAA should initiate the designation process for a Mariana Trench NMS. Rather, comments should address the relevance of the nomination towards NOAA's 11 evaluation criteria and any new information NOAA should consider about the nominated area (these criteria are detailed at *https://nominate.noaa.gov/guide.html*). Comments that do not pertain to the evaluation criteria, or present new information on the Mariana Trench NMS nomination, will not be considered in NOAA's decision on whether to retain this nomination in the inventory.

Whether removing or maintaining the nomination for Mariana Trench NMS, NOAA would follow the same procedure for notifying the public NOAA followed when the nomination was submitted, including a letter to the nominator, a notice in the **Federal Register**, and posting information on ''*nominate.noaa.gov*''.

Authority: 16 U.S.C. 1431 *et seq.*

John Armor,

Director, Office of National Marine Sanctuaries, National Ocean Service, National Oceanic and Atmospheric Administration.

[FR Doc. 2022–01151 Filed 1–20–22; 8:45 am]

BILLING CODE 3510–NK–P

COMMITTEE FOR PURCHASE FROM PEOPLE WHO ARE BLIND OR SEVERELY DISABLED

Procurement List; Proposed Deletions

AGENCY: Committee for Purchase From People Who Are Blind or Severely Disabled.

ACTION: Proposed deletions from the Procurement List.

SUMMARY: The Committee is proposing to delete product(s) from the Procurement List that were furnished by nonprofit agencies employing persons who are blind or have other severe disabilities.

DATES: Comments must be received on or before: February 20, 2022.

ADDRESSES: Committee for Purchase From People Who Are Blind or Severely Disabled, 1401 S Clark Street, Suite 715, Arlington, Virginia 22202–4149.

FOR FURTHER INFORMATION CONTACT: For further information or to submit comments contact: Michael R. Jurkowski, Telephone: (703) 785–6404, or email *CMTEFedReg@AbilityOne.gov.*

SUPPLEMENTARY INFORMATION: This notice is published pursuant to 41 U.S.C. 8503(a)(2) and 41 CFR 51–2.3. Its purpose is to provide interested persons an opportunity to submit comments on the proposed actions.

Deletions

The following product(s) are proposed for deletion from the Procurement List:

Product(s)

NSN(s)—Product Name(s): 7530–01–398–2661—Easel Pad, Ruled, White, 27″ x 34″
Designated Source of Supply: Alabama Industries for the Blind, Talladega, AL
Contracting Activity: GSA/FAS ADMIN SVCS ACQUISITION BR(2), NEW YORK, NY

NSN(s)—Product Name(s):
MR 343—Handheld Spiralizer
MR 13007—Julienne Peeler
MR 13008—Melon Baller
Designated Source of Supply: CINCINNATI ASSOCIATION FOR THE BLIND AND VISUALLY IMPAIRED, Cincinnati, OH
Contracting Activity: Military Resale-Defense Commissary Agency

Michael R. Jurkowski,

Acting Director, Business Operations.

[FR Doc. 2022–01179 Filed 1–20–22; 8:45 am]

BILLING CODE 6353–01–P

COMMITTEE FOR PURCHASE FROM PEOPLE WHO ARE BLIND OR SEVERELY DISABLED

Procurement List; Additions and Deletions

AGENCY: Committee for Purchase From People Who Are Blind or Severely Disabled.

ACTION: Additions to and deletions from the Procurement List.

SUMMARY: This action adds product(s) and service(s) to the Procurement List that will be furnished by nonprofit agencies employing persons who are blind or have other severe disabilities, and deletes product(s) from the Procurement List previously furnished by such agencies.

DATES: *Date added to and deleted from the Procurement List:* February 20, 2022.

ADDRESSES: Committee for Purchase From People Who Are Blind or Severely Disabled, 1401 S Clark Street, Suite 715, Arlington, Virginia 22202–4149.

FOR FURTHER INFORMATION CONTACT: Michael R. Jurkowski, Telephone: (703) 785–6404, or email *CMTEFedReg@AbilityOne.gov.*

SUPPLEMENTARY INFORMATION:

Additions

On 10/22/2021, the Committee for Purchase From People Who Are Blind or Severely Disabled published notice of proposed additions to the Procurement List. This notice is published pursuant to 41 U.S.C. 8503(a)(2) and 41 CFR 51–2.3.

After consideration of the material presented to it concerning capability of qualified nonprofit agencies to provide the product(s) and service(s) and impact of the additions on the current or most recent contractors, the Committee has determined that the product(s) and service(s) listed below are suitable for procurement by the Federal Government under 41 U.S.C. 8501–8506 and 41 CFR 51–2.4.

Regulatory Flexibility Act Certification

I certify that the following action will not have a significant impact on a substantial number of small entities. The major factors considered for this certification were:

1. The action will not result in any additional reporting, recordkeeping or other compliance requirements for small entities other than the small organizations that will furnish the product(s) and service(s) to the Government.

2. The action will result in authorizing small entities to furnish the product(s) and service(s) to the Government.

3. There are no known regulatory alternatives which would accomplish the objectives of the Javits-Wagner-O'Day Act (41 U.S.C. 8501–8506) in connection with the product(s) and service(s) proposed for addition to the Procurement List.

End of Certification

Accordingly, the following product(s) and service(s) are added to the Procurement List:

Product(s)

NSN(s)—Product Name(s):
5180–00–NIB–0156—Kit, Pro-Grade Tool, 6 PC
5180–00–NIB–0160—Kit, Pro-Grade Tool, 14 PC
Designated Source of Supply: Industries for the Blind and Visually Impaired, Inc., West Allis, WI
Contracting Activity: FEDERAL ACQUISITION SERVICE, FAS HEARTLAND REGIONAL ADMINISTRATOR
Mandatory for: Broad Government Requirement
Distribution: B-List

Service(s)

Service Type: Plant Maintenance Services
Mandatory for: GSA PBS Region 5, Major General Emmett J. Bean Federal Center, Indianapolis, IN and Minton-Capehart Federal Building, Indianapolis, IN
Designated Source of Supply: GW Commercial Services, Inc., Indianapolis, IN
Contracting Activity: PUBLIC BUILDINGS

SERVICE, PBS R5

Deletions

On 9/24/2021, the Committee for Purchase From People Who Are Blind or Severely Disabled published notice of proposed deletions from the Procurement List. This notice is published pursuant to 41 U.S.C. 8503(a)(2) and 41 CFR 51–2.3.

After consideration of the relevant matter presented, the Committee has determined that the product(s) listed below are no longer suitable for procurement by the Federal Government under 41 U.S.C. 8501–8506 and 41 CFR 51–2.4.

Regulatory Flexibility Act Certification

I certify that the following action will not have a significant impact on a substantial number of small entities. The major factors considered for this certification were:

1. The action will not result in additional reporting, recordkeeping or other compliance requirements for small entities.

2. The action may result in authorizing small entities to furnish the product(s) and service(s) to the Government.

3. There are no known regulatory alternatives which would accomplish the objectives of the Javits-Wagner-O'Day Act (41 U.S.C. 8501–8506) in connection with the product(s) and service(s) deleted from the Procurement List.

End of Certification

Accordingly, the following product(s) and service(s) are deleted from the Procurement List:

Product(s)

NSN(s)—Product Name(s): 6545–01–530–9451—Individual First Aid Kit (IFAK), AFSOC, USAF
Designated Source of Supply: Chautauqua County Chapter, NYSARC, Jamestown, NY
Contracting Activity: FA7014 AFDW PK, ANDREWS AFB, MD

NSN(s)—Product Name(s): 6545–01–530–9451—Individual First Aid Kit (IFAK), AFSOC, USAF
Designated Source of Supply: Chautauqua County Chapter, NYSARC, Jamestown, NY
Contracting Activity: DLA TROOP SUPPORT, PHILADELPHIA, PA

Michael R. Jurkowski,

Acting Director, Business Operations.

[FR Doc. 2022–01180 Filed 1–20–22; 8:45 am]

BILLING CODE 6353–01–P

DEPARTMENT OF DEFENSE

Department of the Army, Corps of Engineers

Notice of Solicitation of Applications for Stakeholder Representative Members of the Committee on Levee Safety

AGENCY: U.S. Army Corps of Engineers, Department of Defense (DoD).

ACTION: Notice.

SUMMARY: The Assistant Secretary of the Army for Civil Works (ASACW) is soliciting applications to fill non-federal stakeholder representative member positions for the Committee on Levee Safety (Committee) in accordance with the National Levee Safety Program. The Committee on Levee Safety is being formed to advise the U.S. Army Corps of Engineers (Corps) and the Federal Emergency Management Agency (FEMA) on various aspects of developing the National Levee Safety Program. The Committee will be comprised of 14 voting members from state, local, regional, and tribal governments, as well as the private sector. This notice provides expectations for Committee members and announces the process for applying for membership on the Committee.

DATES: Applications must be submitted on or before March 22, 2022.

ADDRESSES: Interested persons may apply by submitting the required information to any of the following:

Email: hq-leveesafety@usace.army.mil and include ''Committee on Levee Safety'' in the subject line of the message.

Mail: U.S. Army Corps of Engineers, Vicksburg District, ATTN: Levee Safety Center—RM 221, 4155 East Clay Street, Vicksburg, MS 39183.

Hand Delivery/Courier: Due to security requirements, we cannot receive applications by hand delivery or courier.

FOR FURTHER INFORMATION CONTACT: Ms. Tammy Conforti, 202–365–6586, email *hq-leveesafety@usace.army.mil* or visit *www.leveesafety.org.*

SUPPLEMENTARY INFORMATION:

Purpose: The purpose of the Committee is to offer advice and recommendations on the effectiveness of the National Levee Safety Program. This Committee will be established under the authority of 33 U.S.C. 3302. Associated with the initial development of key deliverables for the establishment of the National Levee Safety Program, the Committee will provide advice to the U.S. Army Corps of Engineers (USACE) and the Federal Emergency Management Agency (FEMA) on a broad range of issues, topics, or alternatives as determined as needed by both agencies in conjunction with the program development efforts being led by both agencies.

Committee Duties: The following are the anticipated duties of the Committee.

(1) Provide feedback on broader stakeholder engagement approaches including identification of stakeholders and networks to be included.

(2) Publicize opportunities to participate in formal and informal stakeholder engagement activities.

(3) Strive to provide consensus advice on program and product scope, assumptions, criteria, and content for key deliverables.

(4) Provide feedback on approaches and materials to communicate program objectives and benefits to potential beneficiaries.

(5) Help identify and avoid implementation challenges that can be worked into the design of a program or implementation approach.

Non-voting Members: The following are the non-voting members of the Committee.

(1) The Assistant Secretary of the Army for Civil Works (ASACW) (or a designee of the ASACW) to represent the U.S. Army Corps of Engineers (USACE).

(2) The Administrator of the Federal Emergency Management Agency (FEMA) (or a designee of the Administrator) to represent FEMA.

Voting Members: The following are the voting members of the Committee to be appointed by the ASACW.

(1) Eight representatives of state levee safety agencies, defined as current state government employees of a state agency that has regulatory authority over the safety of any non-federal levee in the state. For purposes of the Committee on Levee Safety, ''state'' is defined to include the fifty states, the District of Columbia, Commonwealth of Puerto Rico, and any other territory or possession of the United States. Regulatory authority refers to the ability to promulgate or enforce regulations for non-federal levees. There shall be one state representative from each of the geographical boundaries of the following eight civil works divisions of USACE:

- Great Lakes and Ohio River Division
- Mississippi Valley Division
- North Atlantic Division
- Northwestern Division
- Pacific Ocean Division
- South Atlantic Division
- South Pacific Division

• Southwestern Division

The USACE eight civil works division boundaries can be found at: *www.usace.army.mil/locations.*

(2) Two representatives of the private sector defined as those who are currently not directly employed by a public governmental entity, such as federal, state, local, or regional government or tribe. Private sector representatives can be working for public governmental entities through contractual or other types of agreements. Private sector representatives can be currently employed, retired, or affiliated with a nongovernmental organization.

(3) Two representatives of local or regional governmental agencies defined as current local or regional government employees of any subdivision within a state as defined by state law. For example, this could be a city, county, or other subdivision of a state.

(4) Two representatives of tribes defined as a member or direct employee of a federally recognized tribe or person identified by a federally recognized tribe to represent them.

Terms of Voting Members: A voting member of the Committee can be appointed for a term of up to 3 years. Initial term appointments will be determined by the ASACW with the option to reappoint members as the ASACW deems appropriate. Initial term appointments will be staggered based on the following requirements.

(1) 5 members shall be appointed for a term of 1 year;

(2) 5 members shall be appointed for a term of 2 years; and

(3) 4 members, one state, private sector, local/regional, and tribal representative, shall be appointed for a term of 3 years.

Replacements or Vacancies: Appointed members may not provide their own alternate or replacement member. In cases in which an appointed member is not able to complete their full term and it is within less than 2 years of the member's original appointment date, the ASACW may select a replacement from the current list of applicants if the applicant is still interested and willing to serve on the Committee. Otherwise, a vacancy on the Committee shall be filled in the same manner as the original appointment was made.

Compensation

(1) Each member of the Committee who is an officer or employee of the United States shall serve without compensation in addition to compensation received for the services of the member as an officer or employee of the United States; but shall be allowed a per diem allowance and reimbursable expenses for travel, as authorized for an employee of an agency under subchapter I of chapter 57 of title 5, while away from the home or regular place of business of the member in the performance of the duties of the Committee.

(2) Each member of the Committee who is not an officer or employee of the United States shall receive a stipend of $100 per business day to participate in full Committee meetings that are formally convened by USACE and FEMA and in coordination with the Committee Chairperson. Meeting durations must be a minimum of one full business day or more, not including travel time, to receive the stipend. In addition, non-federal members shall be allowed a per diem allowance and reimbursable expenses, as authorized for an employee of an agency under subchapter I of chapter 57 of title 5, while away from the home or official worksite of the member in the performance of services for the Committee for meetings convened by USACE and FEMA in coordination with the Chairperson.

Conflict of Interest: Committee members cannot be part of any transaction in which a member has a direct or indirect personal financial interest or will obtain an economic benefit as a result of their participation on the Committee.

COVID–19 Vaccination: Each Committee member will be required to show proof of vaccination against COVID–19 to enable attendance at any in-person meeting convened by USACE and FEMA for the purposes of the National Levee Safety Program, including Committee meetings, public meetings, and meetings held in Federal buildings.

Membership Responsibilities: Committee members will not be responsible for developing program deliverables or making directional decisions for the National Levee Safety Program; however, all members will be expected to fulfill the following list of responsibilities. In cases in which a member cannot fulfill these responsibilities, the ASACW reserves the right to replace the Committee member.

(1) Strive to understand the widest possible range of diverse perspectives.

(2) Serve as a liaison with the various stakeholder groups represented to bring diverse viewpoints and interests into consideration.

(3) Enhance awareness of the National Levee Safety Program through each members' professional networks.

(4) Assist with developing balanced, acceptable solutions across stakeholder groups who may have competing or perceived to be competing interests.

(5) Be active participants in all Committee meetings, limiting distractions and other work to the maximum extent possible. Notify the Chairperson if attendance at a Committee meeting is not possible.

(6) Dedicate time to review materials provided in advance of each meeting.

Committee Chairperson: The voting members of the Committee shall appoint a Chairperson from among the voting members of the Committee. The Chairperson shall serve a term of not more than 2 years. The following will be the responsibilities of the Chairperson.

(1) The Chairperson serves as the Committee representative for coordination with USACE and FEMA on topics or products in which the Committee will provide advice and development of meeting schedules and agendas.

(2) The Chairperson will foster an environment of collaboration in order to understand the widest possible range of diverse perspectives, while avoiding extensive focus on any one specific perspective.

(3) The Chairperson presides over the Committee to ensure the purpose and goals of the Committee are accomplished.

(4) The Chairperson presides over all Committee meetings to ensure meeting purposes are met.

(5) The Chairperson will lead the Committee to work towards consensus advice or recommendations that support a National approach to levee safety.

(6) The Chairperson has the ability to appoint a vice-Chairperson from the voting members to assume the duties of the Chairperson in cases of unexpected absences.

Subcommittees or Work Groups

(1) The Committee may form temporary subcommittees or ad-hoc work groups comprised of volunteers from all levels of government and the private sector to provide advice on specific issues relevant to the National Levee Safety Program. The Committee shall seek concurrence from the non-voting member appointed by the ASACW to form a subcommittee or working group and its membership.

(2) Members of subcommittees or work groups must present their work to the Committee for full deliberation and discussion.

(3) Subcommittees or work groups have no authority to make decisions on behalf of the Committee.

(4) Members of subcommittees or work groups shall not be part of any transaction in which they have a direct or indirect personal financial interest or will obtain an economic benefit as a result of their service to the Committee, subcommittee, or working group.

(5) No compensation will be provided to members of subcommittees or work groups.

Non-Voting Member Responsibilities (USACE and FEMA)

(1) Coordinate with the Chairperson to determine priority topics or issues in need of Committee feedback.

(2) Ensure that USACE and FEMA activities related to the National Levee Safety Program are synchronized with the advice and information from the Committee including overall scoping, review of deliverables, and incorporation of broader stakeholder feedback.

(3) Coordinate with the Federal advisory group regarding issues of federal alignment or common federal agency approaches.

(4) Inform the Committee on how Committee recommendations were considered.

Designated Committee Coordinator: USACE will provide the Committee with one designated person who will have the following responsibilities.

(1) Work with the Chairperson to schedule and organize all meetings.

(2) Provide a qualified facilitator and administrative support for all Committee meetings.

(3) Ensure effective Committee operations.

(4) Serve as the point of contact between the Committee and the ASACW.

Committee Meetings

(1) All meetings will be convened by the USACE and FEMA in coordination with the Chairperson.

(2) It is anticipated that meetings will be held in-person whenever possible but may be conducted virtually if necessary.

(3) It is estimated that the Committee on Levee Safety will meet for a duration of 3 business days, allowing for travel on Mondays and Fridays, on a frequency of approximately every 4 months.

(4) Scheduling of meetings will be done in advance and in coordination with Committee members to maximize participation.

(5) Meetings will be held in a variety of locations in the U.S. to promote field exploration, stakeholder feedback and equity of travel time for participants.

(6) Meeting notes will be available for review within one week of the end of the meeting.

Committee Recommendations and Documentation

(1) To the extent possible, the Committee will provide consensus advice and recommendations in writing to the USACE and FEMA non-voting members. Should a case arise where consensus cannot be achieved, the Chairperson may call for a vote among the voting members in order to reach a final recommendation. Areas of consensus, divergence, or those who abstain will be documented and provided to USACE and FEMA.

(2) At the request of the Chairperson, USACE may provide technical writing support to assist the Committee with documentation of recommendations.

(3) After each time the Committee provides recommendations, USACE and FEMA will inform the Committee within a reasonable amount of time whether the recommendations were incorporated or reasons the recommendations were not incorporated.

Applicability of Federal Advisory Committee Act: The Federal Advisory Committee Act (5 U.S.C. App.) shall not apply to the Committee on Levee Safety. Reference 33 U.S.C. 3302(h).

Committee Charter: Upon appointment of the Committee members, a charter containing the membership and operating procedures described in this notice will be finalized and signed by the ASACW. The charter will then be reviewed by the ASACW every 3 years in order to assess the Committee's purpose and effectiveness and adjust the charter if necessary. The Committee may propose amendments at any time to the charter to the Designated Committee Coordinator, who is responsible for seeking approval of amendments to the charter by the ASACW.

Desired Member Expertise and Experience Based on Representative Category

(1) State Government Representative. Defined as a current state government employee of a state agency that has regulatory authority over the safety of any non-federal levee in the state. Regulatory authority refers to the ability to promulgate or enforce regulations for non-federal levees. The following are the desired types of expertise and experience for state government representatives on the Committee.

- Developing state law, state regulations, local ordinances, or state-level public policy.
- Overseeing enforcement or compliance of state law, state regulations, or local ordinances, including permitting (ideally related to floodplain management or environmental compliance).
- Flood risk management projects or programs at the state, watershed level or with multiple states.
- Applying for or distributing grants or other federal assistance.
- Planning, organizing, coordinating or implementing community level programs or working with disadvantaged communities.
- Implementing the National Flood Insurance Program, including state hazard mitigation planning, or the National Dam Safety Program at the state level.
- Resource or asset management at the state level.
- Emergency planning, response, or coordination at the state level.
- Green infrastructure, environmental mitigation/restoration, or natural benefits of floodplains.

(2) Private Sector Representative. Defined as a person who is not directly employed by a public governmental entity, such as federal, state, local, or regional government or tribe. Private sector representatives can be working for public governmental entities through contractual or other types of agreements. Private sector representatives can be currently employed, retired, or affiliated with a nongovernmental organization. The following are the desired types of expertise and experience for the private sector representatives on the Committee.

- Evaluating or assessing existing levees or dams or floodplain related scenarios, including levee accreditation evaluations for the National Flood Insurance Program.
- Performing risk assessments on dams or levees.
- Design and construction or operation/maintenance/inspections of levees or dams.
- Planning, organizing, coordinating or implementing community/stakeholder outreach; or expertise in social sciences.
- Green infrastructure, environmental mitigation/restoration, or natural benefits of floodplains.
- Relevant legal expertise, knowledge, and experience (*e.g.,* in areas of public policy, liability).
- Floodplain management, flood hazard mitigation, or flood preparedness/warning/recovery.
- Knowledge and expertise in climate science.
- Community planning or working with disadvantaged communities.
- Developing public policy or public programs.

(3) Local or Regional Government Representative. Defined as a current

local or regional government employee of any subdivision of a state as defined by state law. For example, this could be a city, county, or other subdivision of a state. The following are the desired types of expertise and experience for the local or regional government representatives on the Committee.

- Developing local/regional regulations, ordinances, or public policy.
- Overseeing enforcement or compliance of regulations or ordinances, including permitting (ideally related to floodplain management or environmental compliance).
- Flood risk management projects or programs at the local or watershed level.
- Planning, organizing, coordinating or implementing community level programs or community outreach efforts, including with disadvantaged communities.
- Implementing the National Flood Insurance Program, including development or implementing floodplain management plans or risk communication efforts.
- Emergency planning, response, or coordination at the community level.
- Green infrastructure, environmental mitigation/restoration, or natural benefits of floodplains.

(4) Tribal Representative. Defined as a member or direct employee of a federally recognized tribe or person identified by a federally recognized tribe to represent them. Tribal representatives should have knowledge and awareness of tribal interests or concerns related to lands or resources that may be impacted by levees.

Additional Specialized Factors That May Be Considered for All Applicants

- Years of experience
- Professional registrations or certifications
- Level of education, specialized education
- Leadership experience
- Membership and activity in professional organizations
- Membership on expert panels or committees
- Training/professor/instructor experience
- Primary or contributing author of technical papers, publications, or significant reports
- Additional applicable experience

Application Requirements for the Committee on Levee Safety. For those persons interested in becoming a member of the Committee on Levee Safety and who have the desire, ability, and expertise, please submit the following information.

(1) *General Information:* Name, Address, Phone, Email.

(2) *Stakeholder Representative Category:* Identify one of the following stakeholder categories you are intending to represent. If representing a state, local, or regional government, please provide proof of employment. If representing the private sector, please provide proof of employment or statement that identifies the affiliation for your identified field. If representing a federally recognized tribe, please provide proof of employment with the tribe or tribal membership or official letter from the federally recognized tribe stating that you are representing them.

- *State Government Representative:* Defined as a current state government employee of a state agency that has regulatory authority over the safety of any non-federal levee in the state. Regulatory authority refers to the ability to promulgate or enforce regulations for non-federal levees.
- *Private Sector Representative:* Defined as a person who is not directly employed by a public governmental entity, such as federal, state, local, or regional government or tribe. Private sector representatives can be working for public governmental entities through contractual or other types of agreements.
- *Local or Regional Government Representative:* Defined as a current local or regional government employee of any subdivision of a state as defined by state law. For example, this could be a city, county, or other subdivision of a state.
- *Tribal Representative:* Defined as a member or direct employee of a federally recognized tribe or person identified by a federally recognized tribe to represent them.

(3) Statement of Qualification (not to exceed 750 words). Please provide a written statement that describes your areas of expertise related to the stakeholder category you would be representing (state, private sector, local/regional, or tribal).

(4) Statement of Participation (not to exceed 500 words). Please provide a written statement as to why you should be appointed as a stakeholder representative and how your participation will contribute to fulfilling the roles and responsibilities of the Committee on Levee Safety.

(5) Experience with Collaboration (not to exceed 500 words). Please provide a written statement describing past experience(s) you have had working collaboratively with a group of individuals representing varied interests towards achieving a mutual goal. Please include the outcome or results of such effort(s).

(6) Acknowledgements. Please include a statement that you have read and agree to the following:

- Your willingness to participate in a virtual interview as part of the selection process if requested or provide additional information if needed.
- Your ability and willingness to accept up to a three-year commitment to serve on the Committee on Levee Safety without compensation, other than the nominal stipend and travel expenses.
- Your willingness to adhere to and support the Committee on Levee Safety charter.
- Your commitment to seek balanced recommendations that address multiple interests and concerns.
- Your willingness to commit the time that may be required to participate on the Committee.
- Your consent that this application may become part of the public record.
- Your acknowledgment that if appointed, as a member you cannot be part of any transaction in which you have a direct or indirect personal financial interest or will obtain an economic benefit as a result of your participation on the Committee nor can you enter into a relationship with vendors for pay in matters that are currently being considered by the Committee.
- Consent that if appointed, your name may be listed on a public website or other Committee on Levee Safety documents.
- Verification that all information submitted is correct and true to the best of your knowledge.

Application Review Process. To be considered, all information requested must be complete and received within the timeline specified in this notice. Full consideration will be given to all complete applications received by the specified due date. All applicants will be notified in writing as to the final decision about their application.

Michael L. Connor,

Assistant Secretary of the Army, (Civil Works).

[FR Doc. 2022–01159 Filed 1–20–22; 8:45 am]

BILLING CODE 3720–58–P

DEPARTMENT OF ENERGY

Bonneville Power Administration

Availability of the Bonneville Purchasing Instructions and Bonneville Financial Assistance Instructions

AGENCY: Bonneville Power Administration (BPA), Department of Energy (DOE).

ACTION: Notice of document availability.

SUMMARY: Copies of the Bonneville Purchasing Instructions (BPI), which contain the policy and establish the procedures that BPA uses in the solicitation, award, and administration of its purchases of goods and services, including construction, are available in printed form or at the following internet address: *https://www.bpa.gov/goto/BPI.* Copies of the Bonneville Financial Assistance Instructions (BFAI), which contain the policy and establish the procedures that BPA uses in the solicitation, award, and administration of financial assistance instruments (principally grants and cooperative agreements), are available in printed form or available at the following internet address: *https://www.bpa.gov/goto/BFAI.*

ADDRESSES: Unbound copies of the BPI or BFAI may be obtained by sending a request to the Head of the Contracting Activity, Routing CP–7, Bonneville Power Administration, P.O. Box 3621, Portland, Oregon 97208–3621.

FOR FURTHER INFORMATION CONTACT: Nicholas M. Jenkins, Head of the Contracting Activity; direct telephone (503) 230–5498; or email *nmjenkins@bpa.gov.*

SUPPLEMENTARY INFORMATION: BPA was established in 1937 as a Federal Power Marketing Agency in the Pacific Northwest. BPA operations are financed from rate payer revenues rather than annual appropriations. BPA's purchasing operations are conducted under 16 U.S.C. 832 *et seq.* and related statutes. Pursuant to these special authorities, the BPI is promulgated as a statement of purchasing policy and as a body of interpretative regulations governing the conduct of BPA purchasing activities, and reflects BPA's private sector approach to purchasing the goods and services that it requires. BPA's financial assistance operations are conducted under 16 U.S.C. 832 *et seq.* and 16 U.S.C. 839 *et seq.* The BFAI express BPA's financial assistance policy. The BFAI also comprise BPA's rules governing implementation of the principles set forth in 2 CFR part 200. BPA's solicitations and contracts include notice of applicability and availability of the BPI and the BFAI, as appropriate, for offerors to obtain information on particular purchases or financial assistance transactions.

Signing Authority: This document of the Department of Energy was signed on January 04, 2022, by Nicholas Jenkins, Head of the Contracting Activity, Bonneville Power Administration, pursuant to delegated authority from the Secretary of Energy. That document with the original signature and date is maintained by DOE. For administrative purposes only, and in compliance with requirements of the Office of the Federal Register, the undersigned DOE Federal Register Liaison Officer has been authorized to sign and submit the document in electronic format for publication, as an official document of the Department of Energy. This administrative process in no way alters the legal effect of this document upon publication in the **Federal Register**.

Signed in Washington, DC, on January 14, 2022.

Treena V. Garrett,

Federal Register Liaison Officer, U.S. Department of Energy.

[FR Doc. 2022–01115 Filed 1–20–22; 8:45 am]

BILLING CODE 6450–01–P

DEPARTMENT OF ENERGY

Proposed Agency Information Collection: Realty—Application for Proposed Use of Right-of-Way

AGENCY: Bonneville Power Administration, Department of Energy.

ACTION: Notice of information collection; request for comments.

SUMMARY: The Department of Energy (DOE), Bonneville Power Administration (BPA), invites public comment on a collection of information that BPA is developing for submission to the Office of Management and Budget (OMB) pursuant to the Paperwork Reduction Act of 1995.

DATES: Comments regarding this proposed information collection must be received on or before March 14, 2022.

ADDRESSES: Written comments and recommendations for the proposed information collection should be sent within 30 days of publication of this notice to *www.reginfo.gov/public/do/PRAMain.* Find this particular information collection by selecting ''Currently under 30-day Review—Open for Public Comments'' or by using the search function.

FOR FURTHER INFORMATION CONTACT: Requests for additional information or copies of the information collection instrument and instructions should be directed to Attn: Theodore Rydmark, Privacy Program, by email at *privacy@bpa.gov,* or by phone at 503–230–5253.

SUPPLEMENTARY INFORMATION:

Comments are invited on: (a) Whether the proposed collection of information is necessary for the proper performance of the functions of the agency, including whether the information shall have practical utility; (b) the accuracy of the agency's estimate of the burden of the proposed collection of information, including the validity of the methodology and assumptions used; (c) ways to enhance the quality, utility, and clarity of the information to be collected; and (d) ways to minimize the burden of the collection of information on respondents, including through the use of automated collection techniques or other forms of information technology.

This information collection request contains:

(1) *OMB No.:* New;

(2) *Information Collection Request Title:* Realty—Application for Proposed Use of BPA Right-of-Way;

(3) *Type of Request:* New;

(4) *Purpose:* This information collection is associated with BPA's management and oversight of applications for public use of BPA right-of-way. The general public completes the following form: BPA F 4300.03e;

(5) *Estimated Number of Respondents:* 400;

(6) *Annual Estimated Number of Respondents:* 400;

(7) *Annual Estimated Number of Burden Hours:* 200;

(8) *Annual Estimated Reporting and Recordkeeping Cost Burden:* 5,376.

Statutory Authority: 16 U.S.C. 832a(c).

Signing Authority: This document of the Department of Energy was signed on January 14, 2022, by Candice D. Palen, Information Collection Clearance Manager, Bonneville Power Administration, pursuant to delegated authority from the Secretary of Energy. That document with the original signature and date is maintained by DOE. For administrative purposes only, and in compliance with requirements of the Office of the Federal Register, the undersigned DOE Federal Register Liaison Officer has been authorized to sign and submit the document in electronic format for publication, as an official document of the Department of Energy. This administrative process in no way alters the legal effect of this document upon publication in the **Federal Register**.

Signed in Washington, DC, on January 18, 2022.

Treena V. Garrett,

Federal Register Liaison Officer, U.S. Department of Energy.

[FR Doc. 2022–01142 Filed 1–20–22; 8:45 am]

BILLING CODE 6450–01–P

DEPARTMENT OF ENERGY

Proposed Agency Information Collection: Aircraft Services—Flight Request

AGENCY: Bonneville Power Administration, Department of Energy.

ACTION: Notice of information collection; request for comments.

SUMMARY: The Bonneville Power Administration (BPA), Department of Energy (DOE), invites public comment on a collection of information that BPA is developing for submission to the Office of Management and Budget (OMB) pursuant to the Paperwork Reduction Act of 1995.

DATES: Comments regarding this proposed information collection must be received on March 14, 2022.

ADDRESSES: Written comments and recommendations for the proposed information collection should be sent within 30 days of publication of this notice to *www.reginfo.gov/public/do/PRAMain.* Find this particular information collection by selecting ''Currently under 30-day Review—Open for Public Comments'' or by using the search function.

FOR FURTHER INFORMATION CONTACT: Requests for additional information or copies of the information collection instrument and instructions should be directed to Attn: Theodore Rydmark, Privacy Program, or by email at *privacy@bpa.gov* or at 503–230–5253.

SUPPLEMENTARY INFORMATION:

Comments are invited on: (a) Whether the proposed collection of information is necessary for the proper performance of the functions of the agency, including whether the information shall have practical utility; (b) the accuracy of the agency's estimate of the burden of the proposed collection of information, including the validity of the methodology and assumptions used; (c) ways to enhance the quality, utility, and clarity of the information to be collected; and (d) ways to minimize the burden of the collection of information on respondents, including through the use of automated collection techniques or other forms of information technology.

This information collection request contains:

(1) *OMB No.:* New;

(2) *Information Collection Request Title:* Aircraft Services—Flight Request;

(3) *Type of Request:* New;

(4) *Purpose:* This information collection is associated with BPA's management and oversight of personnel flying on BPA planes and helicopters. Employees, non-employees, contractors, and the general public complete the following form: BPA F 4450.01e Flight Request;

(5) *Estimated Number of Respondents:* 650;

(6) *Annual Estimated Number of Responses:* 650;

(7) *Annual Estimated Number of Burden Hours:* 65;

(8) *Annual Estimated Reporting and Recordkeeping Cost Burden:* 2505.43.

Statutory Authority: 42 U.S.C. 7101, *et seq.,* 41 CFR 301–70.905, 14 CFR 91.103, 14 CFR 91.1027(c)(1–4).

Signing Authority: This document of the Department of Energy was signed on January 14, 2022, by Candice D. Palen, Information Collection Clearance Manager, Bonneville Power Administration, pursuant to delegated authority from the Secretary of Energy. That document with the original signature and date is maintained by DOE. For administrative purposes only, and in compliance with requirements of the Office of the Federal Register, the undersigned DOE Federal Register Liaison Officer has been authorized to sign and submit the document in electronic format for publication, as an official document of the Department of Energy. This administrative process in no way alters the legal effect of this document upon publication in the **Federal Register**.

Signed in Washington, DC, on January 18, 2022.

Treena V. Garrett,

Federal Register Liaison Officer, U.S. Department of Energy.

[FR Doc. 2022–01144 Filed 1–20–22; 8:45 am]

BILLING CODE 6450–01–P

DEPARTMENT OF ENERGY

Federal Energy Regulatory Commission

[Docket No. CP22–38–000]

Columbia Gas Transmission, LLC; Notice of Request Under Blanket Authorization and Establishing Intervention and Protest Deadline

Take notice that on January 7, 2022, Columbia Gas Transmission, LLC (Columbia), 700 Louisiana Street, Suite 1300, Houston, TX 77002–2700 filed in the above referenced docket a prior notice pursuant to sections 157.205 and 157.216 of the Federal Energy Regulatory Commission's regulations under the Natural Gas Act (NGA), requesting authorization to abandon one injection/withdrawal well and associated pipelines and appurtenances, located in its Weaver Storage Field in, Richland County, Ohio. Columbia proposes to abandon these facilities under authorities granted by its blanket certificate issued in Docket No. CP83–76–000.[1] The proposed abandonments will have no impact on Columbia's existing customers or affect Columbia's existing storage operations. The estimated cost for the Project is approximately $1.75 million, all as more fully set forth in the request which is on file with the Commission and open to public inspection.

In addition to publishing the full text of this document in the **Federal Register**, the Commission provides all interested persons an opportunity to view and/or print the contents of this document via the internet through the Commission's Home Page (*http://ferc.gov*) using the ''eLibrary'' link. Enter the docket number excluding the last three digits in the docket number field to access the document. At this time, the Commission has suspended access to the Commission's Public Reference Room, due to the proclamation declaring a National Emergency concerning the Novel Coronavirus Disease (COVID–19), issued by the President on March 13, 2020. For assistance, contact the Federal Energy Regulatory Commission at *FERCOnlineSupport@ferc.gov* or call toll-free, (886) 208–3676 or TYY, (202) 502–8659.

Any questions concerning this application should be directed to David A. Alonzo, Manager, Project Authorizations, Columbia Gas Transmission, LLC, 700 Louisiana Street, Suite 1300, Houston, Texas, 77002–2700, at (832) 320–5477 or *david_alonzo@tcenergy.com.*

Pursuant to Section 157.9 of the Commission's Rules of Practice and Procedure,[2] within 90 days of this Notice the Commission staff will either: complete its environmental review and place it into the Commission's public record (eLibrary) for this proceeding; or issue a Notice of Schedule for Environmental Review. If a Notice of Schedule for Environmental Review is issued, it will indicate, among other milestones, the anticipated date for the Commission staff's issuance of the final environmental impact statement (FEIS) or environmental assessment (EA) for this proposal. The filing of an EA in the Commission's public record for this proceeding or the issuance of a Notice of Schedule for Environmental Review will serve to notify federal and state

[1] *Columbia Gas Transmission Corporation* (predecessor to Columbia Gas Transmission, LLC), 22 FERC 62,029 (1983).

[2] 18 CFR (Code of Federal Regulations) § 157.9.

agencies of the timing for the completion of all necessary reviews, and the subsequent need to complete all federal authorizations within 90 days of the date of issuance of the Commission staff's FEIS or EA.

Public Participation

There are three ways to become involved in the Commission's review of this project: You can file a protest to the project, you can file a motion to intervene in the proceeding, and you can file comments on the project. There is no fee or cost for filing protests, motions to intervene, or comments. The deadline for filing protests, motions to intervene, and comments is 5:00 p.m. Eastern Time on March 15, 2022. How to file protests, motions to intervene, and comments is explained below.

Protests

Pursuant to section 157.205 of the Commission's regulations under the NGA,[3] any person [4] or the Commission's staff may file a protest to the request. If no protest is filed within the time allowed or if a protest is filed and then withdrawn within 30 days after the allowed time for filing a protest, the proposed activity shall be deemed to be authorized effective the day after the time allowed for protest. If a protest is filed and not withdrawn within 30 days after the time allowed for filing a protest, the instant request for authorization will be considered by the Commission.

Protests must comply with the requirements specified in section 157.205(e) of the Commission's regulations,[5] and must be submitted by the protest deadline, which is March 15, 2022. A protest may also serve as a motion to intervene so long as the protestor states it also seeks to be an intervenor.

Interventions

Any person has the option to file a motion to intervene in this proceeding. Only intervenors have the right to request rehearing of Commission orders issued in this proceeding and to subsequently challenge the Commission's orders in the U.S. Circuit Courts of Appeal.

To intervene, you must submit a motion to intervene to the Commission in accordance with Rule 214 of the Commission's Rules of Practice and Procedure [6] and the regulations under the NGA [7] by the intervention deadline for the project, which is March 15, 2022. As described further in Rule 214, your motion to intervene must state, to the extent known, your position regarding the proceeding, as well as your interest in the proceeding. For an individual, this could include your status as a landowner, ratepayer, resident of an impacted community, or recreationist. You do not need to have property directly impacted by the project in order to intervene. For more information about motions to intervene, refer to the FERC website at *https://www.ferc.gov/resources/guides/how-to/intervene.asp.*

All timely, unopposed motions to intervene are automatically granted by operation of Rule 214(c)(1). Motions to intervene that are filed after the intervention deadline are untimely and may be denied. Any late-filed motion to intervene must show good cause for being late and must explain why the time limitation should be waived and provide justification by reference to factors set forth in Rule 214(d) of the Commission's Rules and Regulations. A person obtaining party status will be placed on the service list maintained by the Secretary of the Commission and will receive copies (paper or electronic) of all documents filed by the applicant and by all other parties.

Comments

Any person wishing to comment on the project may do so. The Commission considers all comments received about the project in determining the appropriate action to be taken. To ensure that your comments are timely and properly recorded, please submit your comments on or before March 15, 2022. The filing of a comment alone will not serve to make the filer a party to the proceeding. To become a party, you must intervene in the proceeding.

How To File Protests, Interventions, and Comments

There are two ways to submit protests, motions to intervene, and comments. In both instances, please reference the Project docket number CP22–38–000 in your submission.

(1) You may file your protest, motion to intervene, and comments by using the Commission's eFiling feature, which is located on the Commission's website (*www.ferc.gov*) under the link to Documents and Filings. New eFiling users must first create an account by clicking on ''eRegister.'' You will be asked to select the type of filing you are making; first select General'' and then select ''Protest'', ''Intervention'', or ''Comment on a Filing''; or [8]

(2) You can file a paper copy of your submission by mailing it to the address below. Your submission must reference the Project docket number CP22–38–000.

To mail via USPS, use the following address: Kimberly D. Bose, Secretary, Federal Energy Regulatory Commission, 888 First Street NE, Washington, DC 20426.

To mail via any other courier, use the following address: Kimberly D. Bose, Secretary, Federal Energy Regulatory Commission, 12225 Wilkins Avenue, Rockville, Maryland 20852.

The Commission encourages electronic filing of submissions (option 1 above) and has eFiling staff available to assist you at (202) 502–8258 or *FercOnlineSupport@ferc.gov.*

Protests and motions to intervene must be served on the applicant either by mail or email (with a link to the document) at: 700 Louisiana Street, Suite 1300, Houston, TX 77002–2700 or *david_alonzo@tcenergy.com.* Any subsequent submissions by an intervenor must be served on the applicant and all other parties to the proceeding. Contact information for parties can be downloaded from the service list at the eService link on FERC Online.

Tracking the Proceeding

Throughout the proceeding, additional information about the project will be available from the Commission's Office of External Affairs, at (866) 208–FERC, or on the FERC website at *www.ferc.gov* using the ''eLibrary'' link as described above. The eLibrary link also provides access to the texts of all formal documents issued by the Commission, such as orders, notices, and rulemakings.

In addition, the Commission offers a free service called eSubscription which allows you to keep track of all formal issuances and submittals in specific dockets. This can reduce the amount of time you spend researching proceedings by automatically providing you with notification of these filings, document summaries, and direct links to the documents. For more information and to register, go to *www.ferc.gov/docs-filing/esubscription.asp.*

[3] 18 CFR 157.205.

[4] Persons include individuals, organizations, businesses, municipalities, and other entities. 18 CFR 385.102(d).

[5] 18 CFR 157.205(e).

[6] 18 CFR 385.214.

[7] 18 CFR 157.10.

[8] Additionally, you may file your comments electronically by using the eComment feature, which is located on the Commission's website at *www.ferc.gov* under the link to Documents and Filings. Using eComment is an easy method for interested persons to submit brief, text-only comments on a project.

Dated: January 14, 2022.

Kimberly D. Bose,

Secretary.

[FR Doc. 2022–01170 Filed 1–20–22; 8:45 am]

BILLING CODE 6717–01–P

DEPARTMENT OF ENERGY

Federal Energy Regulatory Commission

Combined Notice of Filings #1

Take notice that the Commission received the following electric rate filings:

Docket Numbers: ER17–1821–004.
Applicants: Panda Stonewall LLC.
Description: Refund Report: Potomac Energy Center, LLC submits tariff filing per 35.19a(b): Refund Report to be effective N/A.
Filed Date: 1/14/22.
Accession Number: 20220114–5146.
Comment Date: 5 p.m. ET 2/4/22.

Docket Numbers: ER22–46–003.
Applicants: Parkway Generation Essex, LLC.
Description: Tariff Amendment: Supplement to Petition for Order Accepting for Filing Market-Based Rate Tariff to be effective 12/1/2021.
Filed Date: 1/14/22.
Accession Number: 20220114–5122.
Comment Date: 5 p.m. ET 2/4/22.

Docket Numbers: ER22–186–001.
Applicants: Middletown Coke Company, LLC.
Description: Tariff Amendment: Supplemental Filing to 187 to be effective 11/1/2021.
Filed Date: 1/14/22.
Accession Number: 20220114–5100.
Comment Date: 5 p.m. ET 2/4/22.

Docket Numbers: ER22–764–001.
Applicants: PJM Interconnection, L.L.C.
Description: Tariff Amendment: Errata to WMPA, SA No. 6273; Queue No. AG2–422 in Docket No. ER22–764–000 to be effective 12/7/2021.
Filed Date: 1/14/22.
Accession Number: 20220114–5179.
Comment Date: 5 p.m. ET 2/4/22.

Docket Numbers: ER22–820–000.
Applicants: The Potomac Edison Company, PJM Interconnection, L.L.C.
Description: § 205(d) Rate Filing: The Potomac Edison Company submits tariff filing per 35.13(a)(2)(iii: Potomac Edison submits Construction SA No. 6133 Hagerstown-Maple Ave Project to be effective 3/15/2022.
Filed Date: 1/13/22.
Accession Number: 20220113–5159.
Comment Date: 5 p.m. ET 2/3/22.

Docket Numbers: ER22–821–000.
Applicants: Spotlight Power LLC.
Description: Baseline eTariff Filing: Spotlight Power LLC Baseline MBR Tariff & Application to be effective 2/1/2022.
Filed Date: 1/14/22.
Accession Number: 20220114–5065.
Comment Date: 5 p.m. ET 2/4/22.

Docket Numbers: ER22–822–000.
Applicants: Southwest Power Pool, Inc.
Description: § 205(d) Rate Filing: 3164R1 Milligan 3 Wind LLC GIA Cancellation to be effective 1/9/2022.
Filed Date: 1/14/22.
Accession Number: 20220114–5095.
Comment Date: 5 p.m. ET 2/4/22.

Docket Numbers: ER22–823–000.
Applicants: PJM Interconnection, L.L.C.
Description: § 205(d) Rate Filing: Amendment to ISA, Service Agreement No. 3761, Racine ISA (consent) to be effective 12/31/2013.
Filed Date: 1/14/22.
Accession Number: 20220114–5129.
Comment Date: 5 p.m. ET 2/4/22.

Docket Numbers: ER22–824–000.
Applicants: Mid-Atlantic Interstate Transmission, LLC, PJM Interconnection, L.L.C.
Description: § 205(d) Rate Filing: Mid-Atlantic Interstate Transmission, LLC submits tariff filing per 35.13(a)(2)(iii: MAIT submits SA No. 6148 Tipton ECSA to be effective 3/16/2022.
Filed Date: 1/14/22.
Accession Number: 20220114–5160.
Comment Date: 5 p.m. ET 2/4/22.

Docket Numbers: ER22–825–000.
Applicants: American Transmission Systems, Incorporated, PJM Interconnection, L.L.C.
Description: § 205(d) Rate Filing: American Transmission Systems, Incorporated submits tariff filing per 35.13(a)(2)(iii: ATSI submits two ECSAs, SA Nos. 6142 Ivanhoe & 6149 Ontario to be effective 3/16/2022.
Filed Date: 1/14/22.
Accession Number: 20220114–5167.
Comment Date: 5 p.m. ET 2/4/22.

Docket Numbers: ER22–826–000.
Applicants: Mid-Atlantic Interstate Transmission, LLC, Pennsylvania Electric Company, PJM Interconnection, L.L.C.
Description: § 205(d) Rate Filing: Mid-Atlantic Interstate Transmission, LLC submits tariff filing per 35.13(a)(2)(iii: MAIT, Penelec and AEC submit SA No. 5775 Saltillo Construction Agreement to be effective 3/16/2022.
Filed Date: 1/14/22.
Accession Number: 20220114–5174.
Comment Date: 5 p.m. ET 2/4/22.

Docket Numbers: ER22–827–000.
Applicants: Kentucky Utilities Company.
Description: § 205(d) Rate Filing: Amended and Restated Agreement for Borderline Service with Appalachian Power Co to be effective 1/17/2022.
Filed Date: 1/14/22.
Accession Number: 20220114–5178.
Comment Date: 5 p.m. ET 2/4/22.

Take notice that the Commission received the following electric securities filings:

Docket Numbers: ES22–25–000.
Applicants: Union Electric Company d/b/a Ameren Missouri.
Description: Application Under Section 204 of the Federal Power Act for Authorization to Issue Securities of Union Electric Company.
Filed Date: 1/14/22.
Accession Number: 20220114–5175.
Comment Date: 5 p.m. ET 2/4/22.

The filings are accessible in the Commission's eLibrary system (*https://elibrary.ferc.gov/idmws/search/fercgensearch.asp*) by querying the docket number. Any person desiring to intervene or protest in any of the above proceedings must file in accordance with Rules 211 and 214 of the Commission's Regulations (18 CFR 385.211 and 385.214) on or before 5:00 p.m. Eastern time on the specified comment date. Protests may be considered, but intervention is necessary to become a party to the proceeding.

eFiling is encouraged. More detailed information relating to filing requirements, interventions, protests, service, and qualifying facilities filings can be found at: *http://www.ferc.gov/docs-filing/efiling/filing-req.pdf.* For other information, call (866) 208–3676 (toll free). For TTY, call (202) 502–8659.

Dated: January 14, 2022.

Kimberly D. Bose,

Secretary.

[FR Doc. 2022–01172 Filed 1–20–22; 8:45 am]

BILLING CODE 6717–01–P

DEPARTMENT OF ENERGY

Federal Energy Regulatory Commission

[Project No. 2336–101]

Georgia Power Company; Notice of Application Tendered for Filing With the Commission and Establishing Procedural Schedule for Licensing and Deadline for Submission of Final Amendments

Take notice that the following hydroelectric application has been filed with the Commission and is available for public inspection.

a. *Type of Application:* New Major License.

b. Project No.: 2336–101.

c. *Date Filed:* January 3, 2022.

d. *Applicant:* Georgia Power Company (Georgia Power).

e. *Name of Project:* Lloyd Shoals Hydroelectric Project (Lloyd Shoals Project.)

f. *Location:* The Lloyd Shoals Project is located on the Ocmulgee River in Butts, Henry, Jasper, and Newton Counties, Georgia. The project does not occupy any federal land.

g. *Filed Pursuant to:* Federal Power Act, 16 U.S.C. 791 (a)–825(r).

h. *Applicant Contact:* Courtenay O'Mara, Hydro Licensing & Compliance Supervisor; Georgia Power Company; 241 Ralph McGill Boulevard NE; Bin 10193; Atlanta, Georgia 30308–3374; (404) 506–7219, or email at *cromara@southernco.com.*

i. *FERC Contact:* Navreet Deo at (202) 502–6304, or email at *navreet.deo@ferc.gov.*

j. This application is not ready for environmental analysis at this time.

k. The Lloyd Shoals Project consists of: (1) The 4,750-acre Lake Jackson at normal pool elevation of 530 feet Plant Datum (PD) with a gross storage capacity of 107,000 acre-feet; (2) a 1,600-foot-long, 106-foot-high concrete gravity dam consisting of a 143-foot-long non-overflow section, a 198-foot-long powerhouse intake section with six, 12-foot-high by 12-foot-wide octagonal water passages supplying the generating units, a 728.5-foot-long spillway section consisting of a trash gate and an Obermeyer gate system, and a 530-foot-long earth embankment tie-in; (3) a concrete and brick powerhouse containing six horizontal Francis turbine-generator units, each rated at 3.0-megawatts (MW), for a total authorized installed capacity of 18–MW; (4) a 2,100-foot-long saddle dike approximately 3,000 feet upstream of the east end of the main dam; (5) a 500-foot-long auxiliary spillway, topped with 10-foot-high flashboards, located 900 feet southwest of the main dam, which includes a 560-foot-long, 6-foot-high sacrificial earth embankment; (6) two 2.3-kilovolt generator leads connecting the powerhouse to a substation located at the west dam abutment; and (7) appurtenant facilities. Georgia Power proposes no modifications to existing project facilities.

The Lloyd Shoals Project operates in a modified run-of-river mode to generate power during peak demand. Reservoir elevations are maintained between 530 feet PD and 527 feet PD year-round, excluding planned drawdowns and drought. The project provides a continuous minimum flow of 400 cubic feet per second (cfs), or inflow, to the Ocmulgee River downstream for the protection and enhancement of fish and wildlife resources and other downstream resources. Georgia Power proposes no changes to project operation.

Georgia Power proposes environmental measures to improve and enhance water quality, aquatic habitat, and recreation facilities. Georgia Power also proposes plans for protection of shoreline resources and historic properties.

l. A copy of the application can be viewed on the Commission's website at *http://www.ferc.gov,* using the ''eLibrary'' link. Enter the docket number, excluding the last three digits in the docket number field, to access the document. At this time, the Commission has suspended access to the Commission's Public Reference Room due to the proclamation declaring a National Emergency concerning the Novel Coronavirus Disease (COVID–19) issued on March 13, 2020. For assistance, contact FERC at *FERCOnlineSupport@ferc.gov,* or call toll-free, (866) 208–3676 or (202) 502–8659 (TTY).

m. You may also register online at *http://www.ferc.gov/docs-filing/esubscription.asp* to be notified via email of new filings and issuances related to this or other pending projects. For assistance, contact FERC Online Support.

n. *Procedural schedule:* The application will be processed according to the following preliminary schedule. Revisions to the schedule will be made as appropriate.

Milestone	Target date
Issue Deficiency Letter (if necessary).	January 2022.
Request Additional Information (if necessary).	February 2022.
Notice of Acceptance/Notice of Ready for Environmental Analysis.	March 2022

o. Final amendments to the application must be filed with the Commission no later than 30 days from the issuance date of the notice of ready for environmental analysis.

Dated: January 14, 2022.

Kimberly D. Bose,

Secretary.

[FR Doc. 2022–01174 Filed 1–20–22; 8:45 am]

BILLING CODE 6717–01–P

DEPARTMENT OF ENERGY

Federal Energy Regulatory Commission

Combined Notice of Filings

Take notice that the Commission has received the following Natural Gas Pipeline Rate and Refund Report filings:

Filings Instituting Proceedings

Docket Numbers: RP22–484–000.

Applicants: Kinder Morgan Louisiana Pipeline LLC.

Description: § 4(d) Rate Filing: Non-Conforming Negotiated Rate Agreement Filing-Sabine Pass Liquefaction, LLC to be effective 2/1/2022.

Filed Date: 1/13/22.

Accession Number: 20220113–5136.

Comment Date: 5 p.m. ET 1/20/22.

Any person desiring to intervene or protest in any of the above proceedings must file in accordance with Rules 211 and 214 of the Commission's Regulations (18 CFR 385.211 and 385.214) on or before 5:00 p.m. Eastern time on the specified comment date. Protests may be considered, but intervention is necessary to become a party to the proceeding.

The filings are accessible in the Commission's eLibrary system (*https://elibrary.ferc.gov/idmws/search/fercgensearch.asp*) by querying the docket number.

eFiling is encouraged. More detailed information relating to filing requirements, interventions, protests, service, and qualifying facilities filings can be found at: *http://www.ferc.gov/docs-filing/efiling/filing-req.pdf.* For other information, call (866) 208–3676 (toll free). For TTY, call (202) 502–8659.

Dated: January 14, 2022.

Kimberly D. Bose,

Secretary.

[FR Doc. 2022–01171 Filed 1–20–22; 8:45 am]

BILLING CODE 6717–01–P

ENVIRONMENTAL PROTECTION AGENCY

[EPA–HQ–OPPT–2021–0415; FRL–9392–01–OCSPP]

Science Advisory Committee on Chemicals (SACC); Notice of Public Meeting and Request for Comments on Draft Toxic Substances Control Act (TSCA) Screening Level Approach for Assessing Ambient Air and Water Exposures to Fenceline Communities

AGENCY: Environmental Protection Agency (EPA).

ACTION: Notice.

SUMMARY: There will be a 3-day public peer review virtual meeting of the Science Advisory Committee on Chemicals (SACC) to consider and review the draft EPA TSCA Screening Level Approach for Assessing Ambient Air and Water Exposures to Fenceline Communities Version 1.0. In addition, EPA is announcing the availability of and soliciting public comments on the draft approach, which will be presented as a screening level methodology for assessing potential air and water chemical exposures to fenceline communities.

DATES:

Virtual Public Meeting: Will be held March 15–17, 2022, from 10:00 a.m. to approximately 5:00 p.m. (EDT). See additional details and instructions for registration that appear in Unit III.

Written Comments: Submit your written comments on or before February 22, 2022. As described in Unit III.

Special accommodations: Request special accommodations on or before February 20, 2022, to allow EPA time to process these requests.

ADDRESSES:

Virtual Meeting: As described in Unit III., you must register online to receive the webcast meeting link and audio teleconference information. Please follow the registration instructions that will be announced on the SACC website at *https://www.epa.gov/tsca-peer-review* by early February 2022.

Written Comments: Submit written comments, identified by docket identification (ID) number EPA–HQ–OPPT–2021–0415, through the Federal eRulemaking Portal at *http://www.regulations.gov.* Follow the online instructions for submitting comments. Do not electronically submit any information you consider to be Confidential Business Information (CBI) or other information whose disclosure is restricted by statute. Copyrighted material will not be posted without explicit permission of the copyright holder. Members of the public should also be aware that personal information included in any written comments may be posted on the internet at *https://www.regulations.gov.* Additional information on commenting or visiting the docket, along with more information about dockets generally, is available at *https://www.epa.gov/dockets.*

Due to public health concerns related to COVID–19, the EPA Docket Center and Reading Room are open to the public by appointment only. For further information on the EPA Docket Center (EPA/DC) services, docket contact information and the current status of the EPA/DC and Reading Room, please visit *https://www.epa.gov/dockets.* For questions about this docket, you may also contact the Designated Federal Official (DFO) listed under **FOR FURTHER INFORMATION CONTACT**.

Special accommodations: For information on access or services for individuals with disabilities, and to request accommodation for a disability, please contact the DFO listed under **FOR FURTHER INFORMATION CONTACT**.

FOR FURTHER INFORMATION CONTACT: Dr. Alaa Kamel, DFO, Office of Chemical Safety and Pollution Prevention (7201M), Environmental Protection Agency, 1200 Pennsylvania Ave. NW, Washington, DC 20460–0001; telephone number: (202) 564–8450; email address: *kamel.alaa@epa.gov.*

SUPPLEMENTARY INFORMATION:

I. Executive Summary

A. Does this action apply to me?

This action is directed to the public in general. This action may be of interest to persons who are or may be required to conduct testing and those interested in risk evaluations of chemical substances under TSCA. Since other entities may also be interested in this action, the EPA has not attempted to describe all the specific entities that may be affected by this action.

B. Where can I access information about the SACC and this meeting?

Information about the SACC and this meeting is available on the SACC website at *https://www.epa.gov/tsca-peer-review* and in the docket for this meeting, identified by docket ID number EPA–HQ–OPPT–2021–0415, at *https://www.regulations.gov.* You may also subscribe to the following listserv for alerts when notices regarding this and other SACC related activities are published at *https://public.govdelivery.com/accounts/USAEPAOPPT/subscriber/new?topic_id=USAEPAOPPT.*

C. What should I consider as I prepare my comments for EPA?

1. *Submitting CBI.* Do not submit CBI information to EPA through *regulations.gov* or email. If your comments contain any information that you consider to be CBI or otherwise protected, please contact the DFO listed under **FOR FURTHER INFORMATION CONTACT** to obtain special instructions before submitting your comments.

2. *Tips for preparing your comments.* When preparing and submitting your comments, see Tips for Effective Comments at *https://www.epa.gov/dockets.*

II. Background

A. What is the purpose of the SACC?

The SACC was established by EPA in 2016 and operates in accordance with the Federal Advisory Committee Act (FACA), 5 U.S.C. Appendix 2 *et seq.* The SACC provides expert independent scientific advice and consultation to the EPA on the scientific and technical aspects of risk assessments, methodologies, and pollution prevention measures and approaches for chemicals regulated under TSCA.

The SACC is comprised of experts in: Toxicology; Human health and environmental risk assessment; Exposure assessment; and related sciences (*e.g.,* biology, chemistry, pharmacology, biotechnology, nanotechnology, biochemistry, biostatistics, physiologically based pharmacokinetic modelling (PBPK) modeling, computational toxicology, epidemiology, environmental fate, and environmental engineering and sustainability). When needed, the committee members will be assisted in their reviews by consultants with specific expertise in the topics under consideration.

B. What is the purpose of this virtual public meeting?

The purpose of this virtual public meeting of the SACC is to consider and review the draft document entitled ''EPA TSCA Screening Level Approach for Assessing Ambient Air and Water Exposures to Fenceline Communities Version 1.0,'' which will be presented as a screening level methodology for assessing potential air and water chemical exposures to fenceline communities.

EPA published ten final risk evaluations between 2020 and 2021 under the Toxic Substances Control Act (TSCA) as amended by the Frank R. Lautenberg Chemical Safety for the 21st Century Act in June 2016. During the course of finalizing many of these first 10 risk evaluations, a policy decision was made by the previous Administration that EPA not assess air and water exposure pathways that fall under the jurisdiction of other EPA-administered laws. This policy decision was reversed in June 2021. EPA is presenting Version 1.0 of a screening level methodology for assessing potential air and water pathway chemical exposures to fenceline communities. Along with presenting this methodology, EPA will also present results of applying the screening methodology (case studies) to 1-Brompropane or 1-BP (air pathway), n-methylpyrrolidone or NMP (water

pathway), and Methylene Chloride or MC (air and water pathway).

C. How can I access the documents submitted for review to the SACC?

EPA's background documents, related supporting materials, and draft charge questions to the SACC are available in the docket established for this meeting at *https://www.regulations.gov;* docket ID number EPA–HQ–OPPT–2021–0415 and on the SACC website. In addition, EPA will provide additional background documents (*e.g.,* SACC members and consultants participating in this meeting and the meeting agenda) as the materials become available. You may obtain electronic copies of these documents, and certain other related documents that might be available, in the docket at *https://www.regulations.gov* and the SACC website at *https://www.epa.gov/tsca-peer-review.*

After the public meeting, the SACC will prepare meeting minutes summarizing its recommendations to the EPA. The meeting minutes will be posted on the SACC website and in the docket.

III. Public Participation Instructions

To participate in the Exposures to Fenceline Communities virtual public meeting, please follow the instructions in this unit.

A. How can I provide comments for the SACC's consideration?

To ensure proper receipt of comments it is imperative that you identify docket ID No. EPA–HQ–OPPT–2021–0415 in the subject line on the first page of your comments.

1. *Written comments.* The Agency encourages written comments for this meeting be submitted by the date set in the **DATES** section of this document and using the additional instructions in **ADDRESSES** and Unit I.B. and C. and Unit III, of this document. Anyone submitting written comments after this date, should contact the DFO listed under **FOR FURTHER INFORMATION CONTACT**. If you submit comments after the date set in the **DATES** section, those comments will be provided to the SACC members, but you should recognize that the SACC members may not have adequate time to consider your written comments prior to their discussion.

2. *Oral comments.* The Agency encourages each individual or group wishing to make brief oral comments to the SACC during the peer review virtual meeting to please follow the registration instructions that will be announced on the SACC website (*https://www.epa.gov/tsca-peer-review*) by early February 2022.

Oral comments before the SACC during the peer review virtual meeting are limited to 5 minutes unless arrangements have been made prior to the date set in the **DATES** section. In addition, each speaker should email a copy of his/her comments to the DFO prior to the meeting for distribution to the SACC.

B. How can I participate in the virtual public meeting?

This meeting is virtual and viewed via webcast. For information on how to first register and then view the webcast, please refer to the SACC website at *https://www.epa.gov/tsca-peer-review.* EPA intends to announce registration instructions on the SACC website by early February 2022.

Authority: 15 U.S.C. 2601 *et seq.*

Dated: January 18, 2022.

Michal Freedhoff,

Assistant Administrator, Office of Chemicals Safety and Pollution Prevention.

[FR Doc. 2022–01185 Filed 1–20–22; 8:45 am]

BILLING CODE 6560–50–P

ENVIRONMENTAL PROTECTION AGENCY

[EPA–HQ–OAR–2007–1196; FRL–9469–01–OAR]

Recent Postings of Broadly Applicable Alternative Test Methods

AGENCY: Environmental Protection Agency (EPA).

ACTION: Notice of availability.

SUMMARY: This notice announces the broadly applicable alternative test method approval decisions that the Environmental Protection Agency (EPA) made under and in support of New Source Performance Standards (NSPS) and the National Emission Standards for Hazardous Air Pollutants (NESHAP) between January 1, 2021, and December 31, 2021.

FOR FURTHER INFORMATION CONTACT: An electronic copy of each alternative test method approval document is available at *https://www.epa.gov/emc/broadly-applicable-approved-alternative-test-methods.* For questions about this notice, contact Mrs. Lula H. Melton, Air Quality Assessment Division, Office of Air Quality Planning and Standards (E143–02), Environmental Protection Agency, Research Triangle Park, NC 27711; telephone number: (919) 541–2910; fax number: (919) 541–0516; email address: *melton.lula@epa.gov.* For technical questions about individual alternative test method decisions, refer to the contact person identified in the individual approval document(s).

SUPPLEMENTARY INFORMATION:

I. General Information

A. Does this notice apply to me?

This notice will be of interest to entities regulated under title 40 Code of Federal Regulations (CFR) parts 59, 60, 61, 63 and 65; state, local, and tribal agencies; and the EPA Regional offices responsible for implementation and enforcement of regulations under 40 CFR parts 59, 60, 61, 63, and 65.

B. How can I get copies of this information?

You may access copies of the broadly applicable alternative test method approval documents at *https://www.epa.gov/emc/broadly-applicable-approved-alternative-test-methods.*

II. Background

This notice identifies broadly applicable alternative test methods that the EPA approved in 2020 under the New Source Performance Standards (NSPS), 40 CFR part 60, and the National Emission Standards for Hazardous Air Pollutants (NESHAP) programs, 40 CFR parts 61 and 63. See Table 1 of this notice for the summary of these test methods. Source owners and operators may voluntarily use these broadly applicable alternative test methods in lieu of otherwise required test methods or related testing procedures. Use of these broadly applicable alternative test methods are not intended to and should not change the applicable emission standards.

The Administrator has the authority to approve the use of alternative test methods for compliance with requirements under 40 CFR parts 60, 61, and 63. This authority is found in 40 CFR 60.8(b)(3), 61.13(h)(1)(ii), and 63.7(e)(2)(ii). Additional and similar authority can be found in 40 CFR 59.104(f) and 65.158(a)(2). The criteria for approval and procedures for submission and review of broadly applicable alternative test methods are explained in a previous **Federal Register** notice published at 72 FR 4257 (January 30, 2007) and located at *https://www.epa.gov/emc/broadly-applicable-approved-alternative-test-methods.* As explained in this notice, we will announce approvals for broadly applicable alternative test methods at *https://www.epa.gov/emc/broadly-applicable-approved-alternative-test-methods* as they are issued and publish an annual notice that summarizes approvals for broadly applicable alternative test methods during the preceding year.

As also explained in the January 30, 2007 notice, our approval decisions

involve thorough technical reviews of numerous source-specific requests for alternatives and modifications to test methods and procedures. Based on these reviews, we have often found that these modifications or alternatives would be equally valid and appropriate to apply to other sources within a particular class, category, or subcategory. Consequently, we have concluded that where a method modification or an alternative method is clearly broadly applicable to a class, category, or subcategory of sources, it is both equitable and efficient to simultaneously approve its use for all appropriate sources and situations.

Use of approved alternative test methods are not mandatory but rather permissive. Sources are not required to employ such a method but may choose to do so in appropriate circumstances. As specified in 40 CFR 63.7(f)(5), however, a source owner or operator electing to use an alternative method for 40 CFR part 63 standards must continue to use the alternative method until otherwise authorized. Source owners or operators should, therefore, review the specific broadly applicable alternative method approval decision at *https://www.epa.gov/emc/broadly-applicable-approved-alternative-test-methods* before electing to employ any alternative method.

III. Approved Alternative Test Methods and Modifications to Test Methods

This notice specifies six broadly applicable alternative test methods that the EPA approved between January 1, 2021, and December 31, 2021. The alternative method decision letter/memo designation numbers, test methods affected, sources allowed to use this alternative, and method modifications or alternative methods allowed are summarized in Table 1 of this notice. A summary of approval documents was previously made available on our Technology Transfer Network between January 1, 2021, and December 31, 2021. For more detailed information, please refer to the complete copies of these approval documents available at *https://www.epa.gov/emc/broadly-applicable-approved-alternative-test-methods.*

As also explained in our January 30, 2007 notice, we will revisit approvals of alternative test methods in response to written requests or objections indicating that a particular approved alternative test method either should not be broadly applicable or that its use is not appropriate or should be limited in some way. Any objection to a broadly applicable alternative test method, as well as the resolution of that objection, will be announced at *https://www.epa.gov/emc/broadly-applicable-approved-alternative-test-methods* and in a subsequent **Federal Register** notice. If we decide to retract a broadly applicable test method, we will likely consider the need for an appropriate transition period for users either to request case-by-case approval or to transition to an approved method.

Richard A. Wayland,

Director, Air Quality Assessment Division.

TABLE 1—APPROVED ALTERNATIVE TEST METHODS AND MODIFICATIONS TO TEST METHODS REFERENCED IN OR PUBLISHED UNDER APPENDICES IN 40 CFR PARTS 60, 61, AND 63 POSTED BETWEEN JANUARY 2021 AND DECEMBER 2021 [a]

Alternative method decision letter/memo number	As an alternative or modification to . . .	For . . .	You may . . .
ALT–140	Method 28R for Certification and Auditing of Wood Heaters.	Sources subject to 40 CFR part 60, subpart AAA—Standards of Performance for New Residential Wood Heaters.	Use the Integrated Duty Cycle Test Method for Certification of Wood Fired Stoves Using Cordwood: Measurement of Particulate Matter (PM) and Carbon Monoxide (CO) Emissions and Heating Efficiency with the modifications listed in the Agency's approval letter dated March 31, 2021.
ALT–141	Section A6.4.1 of ASTM D6348–03	Sources subject to 40 CFR part 60, subpart JJJJ—Standards of Performance for Stationary Spark Ignition Internal Combustion Engines and 40 CFR part 63, subpart ZZZZ—National Emission Standards for Hazardous Air Pollutants for Stationary Reciprocating Internal Combustion Engines.	Use section 8.3.3 of Method 320—Measurement of Vapor Phase Organic and Inorganic Emissions by Extractive Fourier Transform Infrared (FTIR) Spectroscopy.
ALT–142	Method 18—Measurement of Gaseous Organic Compound Emissions by Gas Chromatography or Method 25A—Determination of Total Gaseous Organic Concentration Using a Flame Ionization Analyzer.	Sources subject to 40 CFR part 63, subpart O—National Emission Standards for Hazardous Air Pollutants (NESHAP): Ethylene Oxide Emission Standards for Sterilization Facilities.	Use Method 320—Measurement of Vapor Phase Organic and Inorganic Emissions by Extractive Fourier Transform Infrared (FTIR) Spectroscopy with the provisos specified in the Agency's approval letter dated March 4, 2021.
ALT–143	Method 10—Determination of Carbon Monoxide Emissions From Stationary Sources (Instrumental Analyzer Procedure).	Sources subject to 40 CFR part 63, subpart AAAA—National Emission Standards for Hazardous Air Pollutants: Municipal Solid Waste Landfills Residual Risk and Technology Review.	Use the alternative method attached to the Agency's approval letter dated September 14, 2021.

TABLE 1—APPROVED ALTERNATIVE TEST METHODS AND MODIFICATIONS TO TEST METHODS REFERENCED IN OR PUBLISHED UNDER APPENDICES IN 40 CFR PARTS 60, 61, AND 63 POSTED BETWEEN JANUARY 2021 AND DECEMBER 2021 [a]—Continued

Alternative method decision letter/ memo number	As an alternative or modification to . . .	For . . .	You may . . .
ALT–144	Method 10—Determination of Carbon Monoxide Emissions From Stationary Sources (Instrumental Analyzer Procedure).	Sources subject to 40 CFR part 63, subpart AAAA—National Emission Standards for Hazardous Air Pollutants: Municipal Solid Waste Landfills Residual Risk and Technology Review.	Use the alternative method attached to the Agency's approval letter dated September 30, 2021.
ALT–145	Method 10—Determination of Carbon Monoxide Emissions From Stationary Sources (Instrumental Analyzer Procedure).	Sources subject to 40 CFR part 63, subpart AAAA—National Emission Standards for Hazardous Air Pollutants: Municipal Solid Waste Landfills Residual Risk and Technology Review.	Use the alternative method attached to the Agency's approval letter dated September 30, 2021.

[a] Source owners or operators should review the specific broadly applicable alternative method approval letter at *https://www.epa.gov/emc/broadly-applicable-approved-alternative-test-methods* before electing to employ any alternative test method.

[FR Doc. 2022–01124 Filed 1–20–22; 8:45 am]

BILLING CODE 6560–50–P

ENVIRONMENTAL PROTECTION AGENCY

[ER–FRL–9060–4]

Environmental Impact Statements; Notice of Availability

Responsible Agency: Office of Federal Activities, General Information 202–564–5632 or *https://www.epa.gov/nepa.*

Weekly receipt of Environmental Impact Statements (EIS)

Filed January 10, 2022 10 a.m. EST Through January 14, 2022 10 a.m. EST

Pursuant to 40 CFR 1506.9.

Notice: Section 309(a) of the Clean Air Act requires that EPA make public its comments on EISs issued by other Federal agencies. EPA's comment letters on EISs are available at: *https://cdxnodengn.epa.gov/cdx-enepa-public/action/eis/search.*

EIS No. 20220006, Final, NMFS, ME, Amendment 23 to the Northeast Multispecies Fishery Management Plan, *Review Period Ends:* 02/22/2022, *Contact:* Mark Grant 978–281–9145.

Amended Notice

EIS No. 20210179, Draft, Caltrans, CA, Cajalco Road Widening and Safety Enhancement Project, *Comment Period Ends:* 03/03/2022, *Contact:* Aaron Burton 909–383–2841. Revision to FR Notice Published 12/03/2021; Extending the Comment Period from 01/18/2022 to 03/03/2022.

Dated: January 14, 2022.

Cindy S. Barger,

Director, NEPA Compliance Division, Office of Federal Activities.

[FR Doc. 2022–01149 Filed 1–20–22; 8:45 am]

BILLING CODE 6560–50–P

FEDERAL COMMUNICATIONS COMMISSION

[OMB 3060–1096; FR ID 67771]

Information Collection Being Reviewed by the Federal Communications Commission

AGENCY: Federal Communications Commission.

ACTION: Notice and request for comments.

SUMMARY: As part of its continuing effort to reduce paperwork burdens, and as required by the Paperwork Reduction Act (PRA) of 1995, the Federal Communications Commission (FCC or the Commission) invites the general public and other Federal agencies to take this opportunity to comment on the following information collection. Comments are requested concerning: Whether the proposed collection of information is necessary for the proper performance of the functions of the Commission, including whether the information shall have practical utility; the accuracy of the Commission's burden estimate; ways to enhance the quality, utility, and clarity of the information collected; ways to minimize the burden of the collection of information on the respondents, including the use of automated collection techniques or other forms of information technology; and ways to further reduce the information collection burden on small business concerns with fewer than 25 employees. The FCC may not conduct or sponsor a collection of information unless it displays a currently valid control number. No person shall be subject to any penalty for failing to comply with a collection of information subject to the PRA that does not display a valid Office of Management and Budget (OMB) control number.

DATES: Written PRA comments should be submitted on or before March 22, 2022. If you anticipate that you will be submitting comments, but find it difficult to do so within the period of time allowed by this notice, you should advise the contact listed below as soon as possible.

ADDRESSES: Direct all PRA comments to Nicole Ongele, FCC, via email *PRA@fcc.gov* and to *nicole.ongele@fcc.gov.*

FOR FURTHER INFORMATION CONTACT: For additional information about the information collection, contact Nicole Ongele, (202) 418–2991.

SUPPLEMENTARY INFORMATION:

OMB Control Number: 3060–1096.

Title: Prepaid Calling Card Service Provider Certification, WC Docket No. 05–68.

Form Number: N/A.

Type of Review: Extension of a currently approved collection.

Respondents: Business or other for-profit entities.

Number of Respondents and Responses: 121 respondents; 1,452 responses.

Estimated Time per Response: 2.5 hours–20 hours.

Frequency of Response: Quarterly reporting requirement, third party disclosure requirement and recordkeeping requirement.

Obligation to Respond: Mandatory. Statutory authority for this information collection is contained in 47 U.S.C. 151, 152, 154(i), 201, 202 and 254 of the Communications Act of 1934, as amended.

Total Annual Burden: 12,100 hours.

Total Annual Cost: No cost.

Privacy Act Impact Assessment: No impact(s).

Nature and Extent of Confidentiality: The Commission does not anticipate providing confidentiality of the information submitted by prepaid calling card providers. Particularly, the prepaid calling card providers must send reports to their transport providers. Additionally, the quarterly certifications sent to the Commission will be made public through the Commission's Electronic Comment Filing System (ECFS) process. These certifications will be filed in the Commission's docket associated with this proceeding. If the respondents submit information they believe to be confidential, they may request confidential treatment of such information under 47 CFR 0.459 of the Commission's rules.

Needs and Uses: Prepaid calling card service providers must report quarterly the percentage of interstate, intrastate and international access charges to carriers from which they purchase transport services. Prepaid calling card providers must also file certifications with the Commission quarterly that include the above information and a statement that they are contributing to the federal Universal Service Fund based on all interstate and international revenue, except for revenue from the sale of prepaid calling cards by, to, or pursuant to contract with the Department of Defense (DoD) or a DoD entity.

Federal Communications Commission.

Marlene Dortch,

Secretary, Office of the Secretary.

[FR Doc. 2022–01187 Filed 1–20–22; 8:45 am]

BILLING CODE 6712–01–P

FEDERAL COMMUNICATIONS COMMISSION

[OMB 3060–XXXX; FR ID 68459]

Information Collection Being Submitted for Review and Approval to Office of Management and Budget

AGENCY: Federal Communications Commission.

ACTION: Notice and request for comments.

SUMMARY: As part of its continuing effort to reduce paperwork burdens, as required by the Paperwork Reduction Act (PRA) of 1995, the Federal Communications Commission (FCC or the Commission) invites the general public and other Federal Agencies to take this opportunity to comment on the following information collection. Pursuant to the Small Business Paperwork Relief Act of 2002, the FCC seeks specific comment on how it might ''further reduce the information collection burden for small business concerns with fewer than 25 employees.''

The Commission may not conduct or sponsor a collection of information unless it displays a currently valid Office of Management and Budget (OMB) control number. No person shall be subject to any penalty for failing to comply with a collection of information subject to the PRA that does not display a valid OMB control number.

DATES: Written comments and recommendations for the proposed information collection should be submitted on or before January 21, 2022.

ADDRESSES: Comments should be sent to *www.reginfo.gov/public/do/PRAMain.* Find this particular information collection by selecting ''Currently under 30-day Review—Open for Public Comments'' or by using the search function. Your comment must be submitted into *www.reginfo.gov* per the above instructions for it to be considered. In addition to submitting in *www.reginfo.gov* also send a copy of your comment on the proposed information collection to Nicole Ongele, FCC, via email to *PRA@fcc.gov* and to *Nicole.Ongele@fcc.gov.* Include in the comments the OMB control number as shown in the **SUPPLEMENTARY INFORMATION** below.

FOR FURTHER INFORMATION CONTACT: For additional information or copies of the information collection, contact Nicole Ongele at (202) 418–2991. To view a copy of this information collection request (ICR) submitted to OMB: (1) Go to the web page *http://www.reginfo.gov/public/do/PRAMain,* (2) look for the section of the web page called ''Currently Under Review,'' (3) click on the downward-pointing arrow in the ''Select Agency'' box below the ''Currently Under Review'' heading, (4) select ''Federal Communications Commission'' from the list of agencies presented in the ''Select Agency'' box, (5) click the ''Submit'' button to the right of the ''Select Agency'' box, (6) when the list of FCC ICRs currently under review appears, look for the Title of this ICR and then click on the ICR Reference Number. A copy of the FCC submission to OMB will be displayed.

SUPPLEMENTARY INFORMATION: As part of its continuing effort to reduce paperwork burdens, as required by the Paperwork Reduction Act (PRA) of 1995 (44 U.S.C. 3501–3520), the FCC invited the general public and other Federal Agencies to take this opportunity to comment on the following information collection. Comments are requested concerning: (a) Whether the proposed collection of information is necessary for the proper performance of the functions of the Commission, including whether the information shall have practical utility; (b) the accuracy of the Commission's burden estimates; (c) ways to enhance the quality, utility, and clarity of the information collected; and (d) ways to minimize the burden of the collection of information on the respondents, including the use of automated collection techniques or other forms of information technology. Pursuant to the Small Business Paperwork Relief Act of 2002, Public Law 107–198, see 44 U.S.C. 3506(c)(4), the FCC seeks specific comment on how it might ''further reduce the information collection burden for small business concerns with fewer than 25 employees.''

OMB Control Number: 3060–XXXX.

Title: Inmate Calling Services (ICS) 2022 One-Time Data Collection, WC Docket No. 12–375, FCC 21–60.

Form Number(s): FCC Form 2302(a) and FCC Form 2302(b).

Type of Review: New collection.

Respondents: Business or other for-profit.

Number of Respondents and Responses: 20 respondents; 20 responses.

Estimated Time per Response: 355 hours on average.

Frequency of Response: One-time reporting requirement.

Obligation to Respond: Required to obtain or retain benefits. Statutory authority for this collection of information is contained in sections 1, 4(i)–4(j), 201(b), 218, 220, 225, 255, 276, 403, and 617 of the Communications Act of 1934, as amended, 47 U.S.C. 151, 154(i)–(j), 201(b), 218, 220, 225, 255, 276, 403 and 617.

Total Annual Burden: 7,100 hours.

Total Annual Cost: No cost.

Privacy Act Impact Assessment: No impact(s).

Nature and Extent of Confidentiality: The Protective Order in the Commission's inmate calling services (ICS) proceeding, WC Docket 12–375, 28 FCC Rcd 16954 (WCB 2013), provides confidential treatment for the proprietary information submitted by ICS providers in response to the Commission's directives. The

Commission will treat as presumptively confidential any particular information identified as confidential by the provider in accordance with the Freedom of Information Act and Commission rules. Each confidential document should be stamped and submitted to the Secretary's Office with an accompanying cover letter, as specified by the Protective Order.

Needs and Uses: In the 2021 ICS Order, WC Docket No. 12–375, FCC 21–60, 86 FR 40682, the Commission continued its reform of the ICS industry by, among other things, directing the Commission's Wireline Competition Bureau (WCB) and Office of Economics and Analytics (OEA) (collectively, WCB/OEA) to collect data and other information regarding ICS providers' operations, costs, demands, and revenues. The Commission explained that it would use this Third Mandatory Data Collection to set permanent interstate and international ICS provider-related rate caps that more closely reflect providers' costs of serving correctional facilities. The Commission also emphasized that those data would enable it to evaluate and, if warranted, revise the current ancillary service charge caps.

The Commission delegated authority to WCB/OEA to implement the Third Mandatory Data Collection—including determining and describing the types of information to require providers to submit regarding their operations, costs, demand, and revenues—and directed WCB/OEA to develop a template and instructions for the collection.

Pursuant to their delegated authority, WCB/OEA drafted proposed instructions, a template, and a certification form for the Third Mandatory Data Collection. *See* Third Mandatory Data Collection Proposed Instructions, available for download at *http://www.fcc.gov/sites/default/files/third_mandatory_data_collection_instructions.docx.* Under WCB/OEA's proposals, ICS providers would be required to submit the required data using a reporting template, to be filed through the Commission's electronic comment filing system (ECFS). The proposed template consists of a Word document (Appendix A to the instructions) for responses requiring narrative information and Excel spreadsheets (Appendix B to the instructions) for responses that require specific numbers or information. ICS providers must also submit an audited financial statement or report for each Year from 2019 through 2021, and a signed certification of truthfulness, accuracy, and completeness. The instructions, template, and certification form will simplify compliance with, and reduce the burden of, this data collection.

On September 22, 2021, WCB/OEA released the Third Mandatory Data Collection (MDC) Public Notice (DA 21–1192, WC Docket No. 12–375 (WCB/OEA Sept. 22. 2021)), seeking comment on all aspects of the proposed collection, including the draft instructions, template, and certification form. The MDC Public Notice was published in the **Federal Register** contemporaneously with the 60-Day Notice for this information collection. *See* 86 FR 54897 (2021). WCB/OEA stated that it would consider comments submitted in response to the 60-Day Notice and the MDC Public Notice in finalizing this information collection prior to submitting the documents to the Office of Management and Budget.

After considering the comments and reply comments filed in response to the MDC Public Notice and the 60-Day Notice, WCB/OEA released an Order on January 18, 2022 adopting the Third Mandatory Data Collection, and issuing the related instructions, template, and certification form. *See* Third Mandatory Data Collection Adoption Order, (DA 22–52, WC Docket No. 12–375 (WCB/OEA Jan. 18, 2022)), available at *https://www.fcc.gov/document/wcb-and-oea-adopt-inmate-calling-services-data-collection.* This Order implemented WCB/OEA's proposals, with refinements responding to suggestions offered by the commenters. Under WCB/OEA's Order, ICS providers will be required to submit the required data using a reporting template to be filed through the Commission's electronic filing system (ECFS) in accordance with instructions adopted by WCB/OEA. *See* Third Mandatory Data Collection Instructions, available for download at: Third Mandatory Data Collection Instructions. The template consists of a Word document (Appendix A to the instructions) for responses requiring narrative information and Excel spreadsheets (Appendix B to the instructions) (collectively, FCC Form 2302(a)) for responses that require specific numbers for information. The template must be submitted in a machine-readable and manipulatable format and may not be converted to a different format, such as a PDF. WCB/OEA also adopted the requirement that a senior executive of each provider certify as to the truthfulness, accuracy, and completeness of the provider's response to the data collection (FCC Form 2302(b)). In addition, WCB/OEA adopted its proposal to require all providers to submit audited financial statements or reports, or similar documentation, for the reporting period, to the extent they have been produced in the ordinary course of business. Providers must submit these reports for each year of the reporting period or certify that they have not produced such reports in the ordinary course of business. These documents will be submitted for approval by the Office of Management and Budget as FCC Form 2302(a) and FCC Form 2302(b).

Federal Communications Commission.

Marlene Dortch,

Secretary, Office of the Secretary.

[FR Doc. 2022–01205 Filed 1–20–22; 8:45 am]

BILLING CODE 6712–01–P

FEDERAL MARITIME COMMISSION

Notice of Agreement Filed

The Commission hereby gives notice of the filing of the following agreement under the Shipping Act of 1984. Interested parties may submit comments, relevant information, or documents regarding the agreement to the Secretary by email at *Secretary@fmc.gov,* or by mail, Federal Maritime Commission, Washington, DC 20573. Comments will be most helpful to the Commission if received within 12 days of the date this notice appears in the **Federal Register**. Copies of agreement are available through the Commission's website (*www.fmc.gov*) or by contacting the Office of Agreements at (202)–523–5793 or *tradeanalysis@fmc.gov.*

Agreement No.: 201376.

Agreement Name: Tropical/Seaboard Antigua Space Charter Agreement.

Parties: Tropical Shipping & Construction Co. Ltd.; and Seaboard Marine Ltd.

Filing Party: Wayne Rohde; Cozen O'Connor.

Synopsis: The Agreement would authorize Tropical to charter space to Seaboard in the trade between Palm Beach, FL and ports in Antigua.

Proposed Effective Date: 2/25/2022.

Location: https://www2.fmc.gov/FMC.Agreements.Web/Public/AgreementHistory/55502.

Dated: January 18, 2022.

William Cody,

Secretary.

[FR Doc. 2022–01167 Filed 1–20–22; 8:45 am]

BILLING CODE 6730–02–P

DEPARTMENT OF HEALTH AND HUMAN SERVICES

Centers for Medicare & Medicaid Services

[Document Identifiers: CMS–P–0015A and CMS–10394]

Agency Information Collection Activities: Proposed Collection; Comment Request

AGENCY: Centers for Medicare & Medicaid Services, Health and Human Services (HHS).

ACTION: Notice.

SUMMARY: The Centers for Medicare & Medicaid Services (CMS) is announcing an opportunity for the public to comment on CMS' intention to collect information from the public. Under the Paperwork Reduction Act of 1995 (the PRA), federal agencies are required to publish notice in the **Federal Register** concerning each proposed collection of information (including each proposed extension or reinstatement of an existing collection of information) and to allow 60 days for public comment on the proposed action. Interested persons are invited to send comments regarding our burden estimates or any other aspect of this collection of information, including the necessity and utility of the proposed information collection for the proper performance of the agency's functions, the accuracy of the estimated burden, ways to enhance the quality, utility, and clarity of the information to be collected, and the use of automated collection techniques or other forms of information technology to minimize the information collection burden.

DATES: Comments must be received by March 22, 2022.

ADDRESSES: When commenting, please reference the document identifier or OMB control number. To be assured consideration, comments and recommendations must be submitted in any one of the following ways:

1. *Electronically.* You may send your comments electronically to *http://www.regulations.gov.* Follow the instructions for ''Comment or Submission'' or ''More Search Options'' to find the information collection document(s) that are accepting comments.

2. *By regular mail.* You may mail written comments to the following address: CMS, Office of Strategic Operations and Regulatory Affairs, Division of Regulations Development, Attention: Document Identifier/OMB Control Number: _____, Room C4–26–05, 7500 Security Boulevard, Baltimore, Maryland 21244–1850.

To obtain copies of a supporting statement and any related forms for the proposed collection(s) summarized in this notice, you may make your request using one of following:

1. Access CMS' website address at website address at *https://www.cms.gov/Regulations-and-Guidance/Legislation/PaperworkReductionActof1995/PRA-Listing.html.*

FOR FURTHER INFORMATION CONTACT: William N. Parham at (410) 786–4669.

SUPPLEMENTARY INFORMATION:

Contents

This notice sets out a summary of the use and burden associated with the following information collections. More detailed information can be found in each collection's supporting statement and associated materials (see **ADDRESSES**).

CMS–P–0015A Medicare Current Beneficiary Survey (MCBS)

CMS–10394 Application and Triennial Re-application to Be a Qualified Entity to Receive Medicare Data for Performance Measurement

Under the PRA (44 U.S.C. 3501–3520), federal agencies must obtain approval from the Office of Management and Budget (OMB) for each collection of information they conduct or sponsor. The term ''collection of information'' is defined in 44 U.S.C. 3502(3) and 5 CFR 1320.3(c) and includes agency requests or requirements that members of the public submit reports, keep records, or provide information to a third party. Section 3506(c)(2)(A) of the PRA requires federal agencies to publish a 60-day notice in the **Federal Register** concerning each proposed collection of information, including each proposed extension or reinstatement of an existing collection of information, before submitting the collection to OMB for approval. To comply with this requirement, CMS is publishing this notice.

Information Collection

1. *Type of Information Collection Request:* Revision of a currently approved collection; *Title of Information Collection:* Medicare Current Beneficiary Survey (MCBS); *Use:* CMS is the largest single payer of health care in the United States. The agency plays a direct or indirect role in administering health insurance coverage for more than 120 million people across the Medicare, Medicaid, CHIP, and Exchange populations. A critical aim for CMS is to be an effective steward, major force, and trustworthy partner in supporting innovative approaches to improving quality, accessibility, and affordability in healthcare. CMS also aims to put patients first in the delivery of their health care needs.

The Medicare Current Beneficiary Survey (MCBS) is the most comprehensive and complete survey available on the Medicare population and is essential in capturing data not otherwise collected through our operations. The MCBS is a nationally-representative, longitudinal survey of Medicare beneficiaries that we sponsor and is directed by the Office of Enterprise Data and Analytics (OEDA). MCBS data collection includes both in-person and phone interviewing. The survey captures beneficiary information whether aged or disabled, living in the community or facility, or serviced by managed care or fee-for-service. Data produced as part of the MCBS are enhanced with our administrative data (*e.g.,* fee-for-service claims, prescription drug event data, enrollment, etc.) to provide users with more accurate and complete estimates of total health care costs and utilization. The MCBS has been continuously fielded for more than 30 years, encompassing over 1.2 million interviews and more than 140,000 survey participants. Respondents participate in up to 11 interviews over a four-year period. This gives a comprehensive picture of health care costs and utilization over a period of time.

The MCBS continues to provide unique insight into the Medicare program and helps CMS and our external stakeholders better understand and evaluate the impact of existing programs and significant new policy initiatives. In the past, MCBS data have been used to assess potential changes to the Medicare program. For example, the MCBS was instrumental in supporting the development and implementation of the Medicare prescription drug benefit by providing a means to evaluate prescription drug costs and out-of-pocket burden for these drugs to Medicare beneficiaries. Beginning in 2023, this proposed revision to the clearance will add a few new measures to existing questionnaire sections and will remove COVID–19-related content that is no longer relevant for administration. New respondent materials are also included in this request. The revisions will result in a net decrease in respondent burden as compared to the current clearance due to the removal of COVID–19 items. *Form Number:* CMS–P–0015A (OMB: 0938–0568); *Frequency:* Occasionally; Affected Public: Business or other for-profits and Not-for-profit institutions; *Number of Respondents:* 13,656; *Total Annual Responses:* 35,998; *Total*

Annual Hours: 46,575. (For policy questions regarding this collection contact William Long at 410–786–7927.)

2. *Type of Information Collection Request:* Revision of a currently approved collection; *Title of Information Collection:* Application and Triennial Re-application to Be a Qualified Entity to Receive Medicare Data for Performance Measurement; *Use:* The Patient Protection and Affordable Care Act (ACA) was enacted on March 23, 2010 (Pub. L. 111–148). ACA amends section 1874 of the Social Security Act by adding a new subsection (e) to make standardized extracts of Medicare claims data under Parts A, B, and D available to qualified entities to evaluate the performance of providers of services and suppliers. This is the application needed to determine an organization's eligibility as a qualified entity. The information from the collection is used by CMS to determine whether an organization meets the criteria required to be considered a qualified entity to receive Medicare claims data under ACA Section 10332. CMS evaluates the organization's eligibility in terms of organizational and governance capabilities, addition of claims data from other sources, and data privacy and security. This collection covers the application through which organizations provide information to CMS to determine whether they will be approved as a qualified entity. This collection also covers the triennial re-application (CMS–10596; 0938–1317) through which organizations provide information to CMS to determine whether they are approved to continue as a qualified entity. *Form Number:* CMS–10394 (OMB control number: 0938–1144); *Frequency:* Occasionally; *Affected Public:* Not-for-profits institutions and Business or other for-profits; *Number of Respondents:* 30; *Total Annual Responses:* 30; *Total Annual Hours:* 3,800. (For policy questions regarding this collection contact Kari A. Gaare at 410–786–8612.)

Dated: January 18, 2022.

William N. Parham, III,

Director, Paperwork Reduction Staff, Office of Strategic Operations and Regulatory Affairs.

[FR Doc. 2022–01183 Filed 1–20–22; 8:45 am]

BILLING CODE 4120–01–P

DEPARTMENT OF HEALTH AND HUMAN SERVICES

Food and Drug Administration

[Docket No. FDA–2021–D–0593]

Collecting and Providing 702(b) Portions of Food and Drug Administration Official Samples—Questions and Answers; Draft Guidance for Industry and Food and Drug Administration Staff; Availability

AGENCY: Food and Drug Administration, HHS.

ACTION: Notice of availability.

SUMMARY: The Food and Drug Administration (FDA or we) is announcing the availability of a draft guidance for industry and FDA staff entitled ''Collecting and Providing 702(b) Portions of FDA Official Samples—Questions and Answers.'' This draft guidance is intended to assist industry and FDA staff with issues and questions related to the requirements for FDA to collect and provide a part of an official sample of an article to any person named on the label of the article, or the owner thereof, or his attorney or agent.

DATES: Submit either electronic or written comments on the draft guidance by February 22, 2022 to ensure that we consider your comment on this draft guidance before we begin work on the final version of the guidance.

ADDRESSES: You may submit comments on any guidance at any time as follows:

Electronic Submissions

Submit electronic comments in the following way:

- *Federal eRulemaking Portal: https://www.regulations.gov.* Follow the instructions for submitting comments. Comments submitted electronically, including attachments, to *https://www.regulations.gov* will be posted to the docket unchanged. Because your comment will be made public, you are solely responsible for ensuring that your comment does not include any confidential information that you or a third party may not wish to be posted, such as medical information, your or anyone else's Social Security number, or confidential business information, such as a manufacturing process. Please note that if you include your name, contact information, or other information that identifies you in the body of your comments, that information will be posted on *https://www.regulations.gov.*
- If you want to submit a comment with confidential information that you do not wish to be made available to the public, submit the comment as a written/paper submission and in the manner detailed (see ''Written/Paper Submissions'' and ''Instructions'').

Written/Paper Submissions

Submit written/paper submissions as follows:

- *Mail/Hand Delivery/Courier (for written/paper submissions):* Dockets Management Staff (HFA–305), Food and Drug Administration, 5630 Fishers Lane, Rm. 1061, Rockville, MD 20852.
- For written/paper comments submitted to the Dockets Management Staff, FDA will post your comment, as well as any attachments, except for information submitted, marked and identified, as confidential, if submitted as detailed in ''Instructions.''

Instructions: All submissions received must include the Docket No. FDA–2021–D–0593 for ''Collecting and Providing 702(b) Portions and of FDA Official Samples—Questions and Answers.'' Received comments will be placed in the docket and, except for those submitted as ''Confidential Submissions,'' publicly viewable at *https://www.regulations.gov* or at the Dockets Management Staff between 9 a.m. and 4 p.m., Monday through Friday, 240–402–7500.

- Confidential Submissions—To submit a comment with confidential information that you do not wish to be made publicly available, submit your comments only as a written/paper submission. You should submit two copies total. One copy will include the information you claim to be confidential with a heading or cover note that states ''THIS DOCUMENT CONTAINS CONFIDENTIAL INFORMATION.'' We will review this copy, including the claimed confidential information, in our consideration of comments. The second copy, which will have the claimed confidential information redacted/blacked out, will be available for public viewing and posted on *https://www.regulations.gov.* Submit both copies to the Dockets Management Staff. If you do not wish your name and contact information to be made publicly available, you can provide this information on the cover sheet and not in the body of your comments and you must identify this information as ''confidential.'' Any information marked as ''confidential'' will not be disclosed except in accordance with 21 CFR 10.20 and other applicable disclosure law. For more information about FDA's posting of comments to public dockets, see 80 FR 56469, September 18, 2015, or access the information at: *https://www.govinfo.gov/content/pkg/FR-2015-09-18/pdf/2015-23389.pdf.*

Docket: For access to the docket to read background documents or the electronic and written/paper comments received, go to *https://www.regulations.gov* and insert the docket number, found in brackets in the heading of this document, into the ''Search'' box and follow the prompts and/or go to the Dockets Management Staff, 5630 Fishers Lane, Rm. 1061, Rockville, MD 20852, 240–402–7500.

You may submit comments on any guidance at any time (see 21 CFR 10.115(g)(5)).

Submit written requests for single copies of the draft guidance to the Division of Operational Policy, Office of Regulatory Affairs, Food and Drug Administration, Element Building, 12420 Parklawn Dr., Rockville, MD 20852. Send one self-addressed adhesive label to assist that office in processing your requests. See the **SUPPLEMENTARY INFORMATION** section for electronic access to the draft guidance document.

FOR FURTHER INFORMATION CONTACT: Chris Henderson, Office of Regulatory Affairs, Food and Drug Administration, Element Building, 12420 Parklawn Dr., Rockville, MD 20857 240–402–8186, *Christopher.henderson@fda.hhs.gov.*

SUPPLEMENTARY INFORMATION:

I. Background

FDA is announcing the availability of a draft guidance for industry and FDA staff entitled ''Collecting and Providing 702(b) Portions of FDA Official Samples—Questions and Answers.'' Section 702 of the FD&C Act (21 U.S.C. 372) authorizes FDA to conduct examinations and investigations and to collect samples. Under section 702(b) of the FD&C Act, when FDA collects a sample of a food, drug, or cosmetic for analysis, FDA must, upon request, provide a part of such official sample for examination or analysis by any person named on the label of the article, or the owner thereof, or his attorney or agent. Additionally, FDA was authorized to establish, by regulation, reasonable exceptions to, and impose reasonable terms and conditions relating to, the requirement to collect and provide a 702(b) portion of an official sample to the owner, as necessary for the proper administration of the provisions of the FD&C Act. FDA's regulation at 21 CFR 2.10 was issued to establish those reasonable exceptions, and terms and conditions, and to implement section 702(b) of the FD&C Act.

This draft guidance is intended to assist industry and FDA staff with issues and questions related to the requirements for FDA to collect and provide portions of official samples under section 702(b) of the FD&C Act and its implementing regulation in 21 CFR 2.10.

This draft guidance is being issued consistent with FDA's good guidance practices regulation (21 CFR 10.115). The draft guidance, when finalized, will represent the current thinking of FDA on ''Collecting and Providing 702(b) Portions of FDA Official Samples—Questions and Answers.'' It does not establish any rights for any person and is not binding on FDA or the public. You can use an alternative approach if it satisfies the requirements of the applicable statutes and regulations.

II. Paperwork Reduction Act of 1995

FDA tentatively concludes that this draft guidance contains no collection of information. Therefore, clearance by the Office of Management and Budget under the Paperwork Reduction Act of 1995 is not required.

III. Electronic Access

Persons with access to the internet may obtain the draft guidance at either *https://www.fda.gov/regulatory-information/search-fda-guidance-documents/search-general-and-cross-cutting-topics-guidance-documents, https://www.fda.gov/regulatory-information/search-fda-guidance-documents,* or *https://www.regulations.gov.*

Dated: January 14, 2022.

Lauren K. Roth,

Associate Commissioner for Policy.

[FR Doc. 2022–01143 Filed 1–20–22; 8:45 am]

BILLING CODE 4164–01–P

DEPARTMENT OF HEALTH AND HUMAN SERVICES

Food and Drug Administration

[Docket Nos. FDA–2020–D–1137, FDA–2020–D–1138, FDA–2020–D–0987]

Guidance Documents Related to Coronavirus Disease 2019; Availability

AGENCY: Food and Drug Administration, HHS.

ACTION: Notice of availability.

SUMMARY: The Food and Drug Administration (FDA or Agency) is announcing the availability of FDA guidance documents related to the Coronavirus Disease 2019 (COVID–19) public health emergency (PHE). This notice of availability (NOA) is pursuant to the process that FDA announced, in the **Federal Register** of March 25, 2020, for making available to the public COVID–19-related guidances. The guidances identified in this notice address issues related to the COVID–19 PHE and have been issued in accordance with the process announced in the March 25, 2020, notice. The guidances have been implemented without prior comment, but they remain subject to comment in accordance with the Agency's good guidance practices.

DATES: The announcement of the guidances is published in the **Federal Register** on January 21, 2022.

ADDRESSES: You may submit either electronic or written comments on Agency guidances at any time as follows:

Electronic Submissions

Submit electronic comments in the following way:

- *Federal eRulemaking Portal: https://www.regulations.gov.* Follow the instructions for submitting comments. Comments submitted electronically, including attachments, to *https://www.regulations.gov* will be posted to the docket unchanged. Because your comment will be made public, you are solely responsible for ensuring that your comment does not include any confidential information that you or a third party may not wish to be posted, such as medical information, your or anyone else's Social Security number, or confidential business information, such as a manufacturing process. Please note that if you include your name, contact information, or other information that identifies you in the body of your comments, that information will be posted on *https://www.regulations.gov.*
- If you want to submit a comment with confidential information that you do not wish to be made available to the public, submit the comment as a written/paper submission and in the manner detailed (see ''Written/Paper Submissions'' and ''Instructions'').

Written/Paper Submissions

Submit written/paper submissions as follows:

- *Mail/Hand Delivery/Courier (for written/paper submissions):* Dockets Management Staff (HFA–305), Food and Drug Administration, 5630 Fishers Lane, Rm. 1061, Rockville, MD 20852.
- For written/paper comments submitted to the Dockets Management Staff, FDA will post your comment, as well as any attachments, except for information submitted, marked and identified, as confidential, if submitted as detailed in ''Instructions.''

Instructions: All submissions received must include the name of the guidance document that the comments address and the docket number for the guidance

(see table 1). Received comments will be placed in the docket(s) and, except for those submitted as ''Confidential Submissions,'' publicly viewable at *https://www.regulations.gov* or at the Dockets Management Staff between 9 a.m. and 4 p.m., Monday through Friday, 240–402–7500.

• Confidential Submissions—To submit a comment with confidential information that you do not wish to be made publicly available, submit your comments only as a written/paper submission. You should submit two copies total. One copy will include the information you claim to be confidential with a heading or cover note that states ''THIS DOCUMENT CONTAINS CONFIDENTIAL INFORMATION.'' The Agency will review this copy, including the claimed confidential information, in its consideration of comments. The second copy, which will have the claimed confidential information redacted/blacked out, will be available for public viewing and posted on *https://www.regulations.gov.* Submit both copies to the Dockets Management Staff. If you do not wish your name and contact information to be made publicly available, you can provide this information on the cover sheet and not in the body of your comments and you must identify this information as ''confidential.'' Any information marked as ''confidential'' will not be disclosed except in accordance with 21 CFR 10.20 and other applicable disclosure law. For more information about FDA's posting of comments to public dockets, see 80 FR 56469, September 18, 2015, or access the information at: *https://www.govinfo.gov/content/pkg/FR-2015-09-18/pdf/2015-23389.pdf.*

Docket: For access to the docket to read background documents or the electronic and written/paper comments received, go to *https://www.regulations.gov* and insert the docket number, found in brackets in the heading of this document, into the ''Search'' box and follow the prompts and/or go to the Dockets Management Staff, 5630 Fishers Lane, Rm. 1061, Rockville, MD 20852, 240–402–7500.

You may submit comments on any guidance at any time (see § 10.115(g)(5) (21 CFR 10.115(g)(5))).

Submit written requests for single copies of these guidances to the address noted in table 1. Send two self-addressed adhesive labels to assist that office in processing your requests. See the **SUPPLEMENTARY INFORMATION** section for electronic access to the guidance.

FOR FURTHER INFORMATION CONTACT: Stephen Ripley, Center for Biologics Evaluation and Research (CBER), Food and Drug Administration, 10903 New Hampshire Ave., Bldg. 71, Rm. 7301, Silver Spring, MD 20993–0002, 240–402–7911, or Erica Takai, Center for Devices and Radiological Health (CDRH), Food and Drug Administration, 10903 New Hampshire Ave., Bldg. 66, Rm. 5456, Silver Spring, MD 20993–0002, 301–796–6353.

SUPPLEMENTARY INFORMATION:

I. Background

On January 31, 2020, as a result of confirmed cases of COVID–19, and after consultation with public health officials as necessary, the Secretary of Health and Human Services (HHS), pursuant to the authority under section 319 of the Public Health Service Act (42 U.S.C. 247d), determined that a PHE exists and has existed since January 27, 2020, nationwide.[1] On March 13, 2020, there was a Presidential declaration that the COVID–19 outbreak in the United States constitutes a national emergency, beginning March 1, 2020.[2]

In the **Federal Register** of March 25, 2020 (85 FR 16949) (the March 25, 2020, notice) (available at *https://www.govinfo.gov/content/pkg/FR-2020-03-25/pdf/2020-06222.pdf*), FDA announced procedures for making available FDA guidances related to the COVID–19 PHE. These procedures, which operate within FDA's established good guidance practices regulations, are intended to allow FDA to rapidly disseminate Agency recommendations and policies related to COVID–19 to industry, FDA staff, and other stakeholders. The March 25, 2020, notice stated that due to the need to act quickly and efficiently to respond to the COVID–19 PHE, FDA believes that prior public participation will not be feasible or appropriate before FDA implements COVID–19-related guidances. Therefore, FDA will issue COVID–19-related guidances for immediate implementation without prior public comment (see section 701(h)(1)(C) of the Federal Food, Drug, and Cosmetic Act (21 U.S.C. 371(h)(1)(C)) and § 10.115(g)(2)). The guidances are available on FDA's web pages entitled ''COVID–19-Related Guidance Documents for Industry, FDA Staff, and Other Stakeholders'' (available at *https://www.fda.gov/emergency-preparedness-and-response/mcm-issues/covid-19-related-guidance-documents-industry-fda-staff-and-other-stakeholders*) and ''Search for FDA Guidance Documents'' (available at *https://www.fda.gov/regulatory-information/search-fda-guidance-documents).*

The March 25, 2020, notice further stated that, in general, rather than publishing a separate NOA for each COVID–19-related guidance, FDA intends to publish periodically a consolidated NOA announcing the availability of certain COVID–19-related guidances that FDA issued during the relevant period, as included in table 1. This notice announces COVID–19-related guidances that are posted on FDA's website.

II. Availability of COVID–19-Related Guidance Documents

Pursuant to the process described in the March 25, 2020, notice, FDA is announcing the availability of the following COVID–19-related guidances:

TABLE 1—GUIDANCES RELATED TO THE COVID–19 PUBLIC HEALTH EMERGENCY

Docket No.	Center	Title of guidance	Contact information to request single copies
FDA–2020–D–1137	CBER	Policy for Certain REMS Requirements During the Tocilizumab Shortage Related to the COVID–19 Public Health Emergency (December 2021).	Office of Communication, Outreach and Development, 10903 New Hampshire Ave., Bldg. 71, Rm. 3128, Silver Spring, MD 20993–0002, 1–800–835–4709 or 240–402–8010; email *ocod@fda.hhs.gov.*

[1] Secretary of Health and Human Services, ''Determination that a Public Health Emergency Exists'' (originally issued on January 31, 2020, and subsequently renewed), available at: *https://www.phe.gov/emergency/news/healthactions/phe/Pages/default.aspx.*

[2] Proclamation on Declaring a National Emergency Concerning the Novel Coronavirus Disease (COVID–19) Outbreak (March 13, 2020), available at: *https://trumpwhitehouse.archives.gov/presidential-actions/proclamation-declaring-national-emergency-concerning-novel-coronavirus-disease-covid-19-outbreak/.* On February 24, 2021, there was a Presidential Declaration continuing the national emergency concerning the COVID–19 pandemic beyond March 1, 2021. See Continuation of the National Emergency Concerning the Coronavirus Disease 2019 (COVID–19) Pandemic (February 24, 2021), available at *https://www.federalregister.gov/documents/2021/02/26/2021-04173/continuation-of-the-national-emergency-concerning-the-coronavirus-disease-2019-covid-19-pandemic.*

TABLE 1—GUIDANCES RELATED TO THE COVID–19 PUBLIC HEALTH EMERGENCY—Continued

Docket No.	Center	Title of guidance	Contact information to request single copies
FDA–2020–D–1138	CDRH	Enforcement Policy for Viral Transport Media During the Coronavirus Disease (COVID–19) Public Health Emergency (Revised November 2021).	*CDRH-Guidance@fda.hhs.gov.* Please include the document number 20038–R2 and complete title of the guidance in the request.
FDA–2020–D–0987	CDRH	Policy for Coronavirus Disease-2019 Tests During the Public Health Emergency (Revised November 2021).	*CDRH-Guidance@fda.hhs.gov.* Please include the document number 20010–R4 and complete title of the guidance in the request.

Although these guidances have been implemented immediately without prior comment, FDA will consider all comments received and revise the guidances as appropriate (see § 10.115(g)(3)).

These guidances are being issued consistent with FDA's good guidance practices regulation (§ 10.115). The guidances represent the current thinking of FDA. They do not establish any rights for any person and are not binding on FDA or the public. You can use an alternative approach if it satisfies the requirements of the applicable statutes and regulations.

III. Paperwork Reduction Act of 1995

A. CBER Guidance

While this guidance contains no collection of information, it does refer to previously approved FDA collections of information (listed in table 2). Therefore, clearance by the Office of Management and Budget (OMB) under the Paperwork Reduction Act of 1995 (PRA) (44 U.S.C. 3501–3521) is not required for this guidance. The previously approved collections of information are subject to review by OMB under the PRA. The collections of information in the following FDA regulations and guidance have been approved by OMB as listed in the following table:

TABLE 2—CBER GUIDANCE AND COLLECTIONS

COVID–19 guidance title	CFR cite referenced in COVID–19 guidance	Another guidance title referenced in COVID–19 guidance	OMB control No(s).
Policy for Certain REMS Requirements During the Tocilizumab Shortage Related to the COVID–19 Public Health Emergency (December 2021).	21 CFR part 314 (New Drug Applications and Abbreviated New Drug Applications).		0910–0001
	21 CFR parts 210, 211 and 610 (Current Good Manufacturing Practices).		0910–0139
	21 CFR part 600 (Adverse Experience Reports).		0910–0308
	21 CFR part 601 (Biologic License Applications).		0910–0338

B. CDRH Guidances

The guidances listed below refer to previously approved FDA collections of information. These collections of information are subject to review by OMB under the PRA. The collections of information in the following FDA regulations and guidances have been approved by OMB as listed in the table below (table 3). These guidances also contain a new collection of information not approved under a current collection. These new collections of information have been granted a public health emergency (PHE) waiver from the PRA by the Department of Health and Human Services (HHS) on March 19, 2020, under section 319(f) of the PHS Act. Information concerning the PHE PRA waiver can be found on the HHS website at *https://aspe.hhs.gov/public-health-emergency-declaration-pra-waivers.*

TABLE 3—CDRH GUIDANCES AND COLLECTIONS

COVID–19 guidance title	CFR cite referenced in COVID–19 guidance	Another guidance referenced in COVID–19 guidance	OMB Control No(s).	New Collection covered by PHE PRA Waiver
Enforcement Policy for Viral Transport Media During the Coronavirus Disease 2019 (COVID–19) Public Health Emergency (Revised November 2021) (document number 20038–R2).		Emergency Use Authorization of Medical Products and Related Authorities; Guidance for Industry and Other Stakeholders.	0910–0595	
		Administrative Procedures for Clinical Laboratory Improvement Amendments of 1988 Categorization.	0910–0607	
	800, 801, and 809		0910–0485	
	803		0910–0437	
	806		0910–0359	

TABLE 3—CDRH GUIDANCES AND COLLECTIONS—Continued

COVID–19 guidance title	CFR cite referenced in COVID–19 guidance	Another guidance referenced in COVID–19 guidance	OMB Control No(s).	New Collection covered by PHE PRA Waiver
	807, subparts A through D 807, subpart E 820 830 and 801.20	....	0910–0625 0910–0120 0910–0073 0910–0720	
				Manufacturer voluntary reporting to FDA of viral transport media manufacturing capacity information.
				Manufacturer voluntary reporting to FDA of sterile phosphate buffered saline/saline manufacturing capacity information.
Policy for Coronavirus Disease–2019 Tests During the Public Health Emergency (Revised November 2021) (document number 20010–R4).				
		Emergency Use Authorization of Medical Products and Related Authorities; Guidance for Industry and Other Stakeholders.	0910–0595	
		Administrative Procedures for Clinical Laboratory Improvement Amendments of 1988 Categorization.	0910–0607	
	803	Medical Device Reporting	0910–0437	
				Confirmation to FDA that the developer of a diagnostic or serology test on FDA's notification lists and for which an Emergency Use Authorization (EUA) request was submitted, wants FDA to continue reviewing its EUA request.

IV. Electronic Access

Persons with access to the internet may obtain COVID–19-related guidances at:

- FDA web page entitled ''COVID–19-Related Guidance Documents for Industry, FDA Staff, and Other Stakeholders,'' available at *https://www.fda.gov/emergency-preparedness-and-response/mcm-issues/covid-19-related-guidance-documents-industry-fda-staff-and-other-stakeholders;*
- FDA web page entitled ''Search for FDA Guidance Documents'' available at *https://www.fda.gov/regulatory-information/search-fda-guidance-documents;* or
- *https://www.regulations.gov.*

Dated: January 14, 2022.

Lauren K. Roth,

Associate Commissioner for Policy.

[FR Doc. 2022–01146 Filed 1–20–22; 8:45 am]

BILLING CODE 4164–01–P

DEPARTMENT OF HEALTH AND HUMAN SERVICES

Food and Drug Administration

[Docket No. FDA–2022–N–0049]

Revocation of Five Authorizations of Emergency Use of In Vitro Diagnostic Devices for Detection and/or Diagnosis of COVID–19; Availability

AGENCY: Food and Drug Administration, HHS.

ACTION: Notice.

SUMMARY: The Food and Drug Administration (FDA) is announcing the revocation of the Emergency Use Authorizations (EUAs) (the

Authorizations) issued to Cellex Inc. for the Cellex q–SARS–CoV–2 IgG/IgM Rapid Test, BioMérieux SA for the SARS–COV–2 R–GENE, Siemens Healthcare Diagnostics Inc. for the Atellica IM SARS–CoV–2 IgG (COV2G), Siemens Healthcare Diagnostics Inc. for the ADVIA Centaur SARS–CoV–2 IgG (COV2G), and Cepheid for the Xpert Omni SARS–CoV–2. FDA revoked these Authorizations under the Federal Food, Drug, and Cosmetic Act (FD&C Act). The revocations, which include an explanation of the reasons for each revocation, are reprinted in this document.

DATES: The Authorization for the Cellex q–SARS–CoV–2 IgG/IgM Rapid Test is revoked as of December 10, 2021. The Authorizations for the SARS–COV–2 R–GENE, Atellica IM SARS–CoV–2 IgG (COV2G), and ADVIA Centaur SARS–CoV–2 IgG (COV2G) are revoked as of December 17, 2021. The Authorization for the Xpert Omni SARS–CoV–2 is revoked as of December 20, 2021.

ADDRESSES: Submit written requests for a single copy of the revocations to the Office of Counterterrorism and Emerging Threats, Food and Drug Administration, 10903 New Hampshire Ave., Bldg. 1, Rm. 4338, Silver Spring, MD 20993–0002. Send one self-addressed adhesive label to assist that office in processing your request or include a Fax number to which the revocations may be sent. See the **SUPPLEMENTARY INFORMATION** section for electronic access to the revocations.

FOR FURTHER INFORMATION CONTACT: Jennifer J. Ross, Office of Counterterrorism and Emerging Threats, Food and Drug Administration, 10903 New Hampshire Ave., Bldg. 1, Rm. 4332, Silver Spring, MD 20993–0002, 240–402–8155 (this is not a toll-free number).

SUPPLEMENTARY INFORMATION:

I. Background

Section 564 of the FD&C Act (21 U.S.C. 360bbb–3) as amended by the Project BioShield Act of 2004 (Pub. L. 108–276) and the Pandemic and All-Hazards Preparedness Reauthorization Act of 2013 (Pub. L. 113–5) allows FDA to strengthen the public health protections against biological, chemical, nuclear, and radiological agents. Among other things, section 564 of the FD&C Act allows FDA to authorize the use of an unapproved medical product or an unapproved use of an approved medical product in certain situations. On April 1, 2020, FDA issued an EUA to Cellex Inc. for the Cellex q–SARS–CoV–2 IgG/IgM Rapid Test, subject to the terms of the Authorization. Notice of the issuance of this Authorization was published in the **Federal Register** on June 5, 2020 (85 FR 34638), as required by section 564(h)(1) of the FD&C Act. On May 6, 2020, FDA issued an EUA to BioMérieux SA for the SARS–COV–2 R–GENE, subject to the terms of the Authorization. Notice of the issuance of this Authorization was published in the **Federal Register** on July 14, 2020 (85 FR 42407), as required by section 564(h)(1) of the FD&C Act. On July 31, 2020, FDA issued an EUA to Siemens Healthcare Diagnostics Inc. for the Atellica IM SARS–CoV–2 IgG (COV2G), subject to the terms of the Authorization. Notice of the issuance of this Authorization was published in the **Federal Register** on November 20, 2020 (85 FR 74346), as required by section 564(h)(1) of the FD&C Act. On July 31, 2020, FDA issued an EUA to Siemens Healthcare Diagnostics Inc. for the ADVIA Centaur SARS–CoV–2 IgG (COV2G), subject to the terms of the Authorization. Notice of the issuance of this Authorization was published in the **Federal Register** on November 20, 2020 (85 FR 74346), as required by section 564(h)(1) of the FD&C Act. On November 27, 2020, FDA issued an EUA to Cepheid for the Xpert Omni SARS–CoV–2, subject to the terms of the Authorization. Notice of the issuance of this Authorization was published in the **Federal Register** on April 23, 2021 (86 FR 21749), as required by section 564(h)(1) of the FD&C Act. Subsequent updates to the Authorizations were made available on FDA's website. The authorization of a device for emergency use under section 564 of the FD&C Act may, pursuant to section 564(g)(2) of the FD&C Act, be revoked when the criteria under section 564(c) of the FD&C Act for issuance of such authorization are no longer met (section 564(g)(2)(B) of the FD&C Act), or other circumstances make such revocation appropriate to protect the public health or safety (section 564(g)(2)(C) of the FD&C Act).

II. EUA Revocation Requests

On December 7, 2021, Cellex requested withdrawal of, and on December 10, 2021, FDA revoked, the Authorization for the Cellex q–SARS–CoV–2 IgG/IgM Rapid Test. Because Cellex requested that FDA withdraw the Authorization and FDA understands the product is no longer being distributed, FDA has determined that it is appropriate to protect the public health or safety to revoke this Authorization. On December 10, 2021, FDA received a request from BioMérieux SA for the revocation of, and on December 17, 2021, FDA revoked, the Authorization for the SARS–COV–2 R–GENE. Because BioMérieux SA notified FDA that BioMérieux SA has decided to no longer commercially support the authorized product and requested FDA revoke the Authorization, FDA has determined that it is appropriate to protect the public health or safety to revoke this Authorization. On December 9, 2021, FDA received a request from Siemens Healthcare Diagnostics Inc. for the voluntary removal of, and on December 17, 2021, FDA revoked, the Authorization for the Atellica IM SARS–CoV–2 IgG (COV2G). Because Siemens Healthcare Diagnostics Inc. notified FDA that Siemens Healthcare Diagnostics Inc. has decided to no longer market the authorized product and requested FDA voluntarily remove the Atellica IM SARS–CoV–2 IgG (COV2G) from FDA's list of authorized devices, FDA has determined that it is appropriate to protect the public health or safety to revoke this Authorization. On December 9, 2021, FDA received a request from Siemens Healthcare Diagnostics Inc. for the voluntary removal of, and on December 17, 2021, FDA revoked, the Authorization for the ADVIA Centaur SARS–CoV–2 IgG (COV2G). Because Siemens Healthcare Diagnostics Inc. notified FDA that Siemens Healthcare Diagnostics Inc. has decided to no longer market the authorized product and requested FDA voluntarily remove the ADVIA Centaur SARS–CoV–2 IgG (COV2G) from FDA's list of authorized devices, FDA has determined that it is appropriate to protect the public health or safety to revoke this Authorization. On December 17, 2021, FDA received a request from Cepheid for the revocation of, and on December 20, 2021, FDA revoked, the Authorization for the Xpert Omni SARS–CoV–2. Because Cepheid has notified FDA that Cepheid has not commercially distributed any of the Xpert Omni SARS–CoV–2 product due to the current public clinical needs being met by Cepheid's other EUA tests that are available and requested FDA revoke the EUA for the Xpert Omni SARS–CoV–2, FDA has determined that it is appropriate to protect the public health or safety to revoke this Authorization.

III. Electronic Access

An electronic version of this document and the full text of the revocations are available on the internet at *https://www.regulations.gov/.*

IV. The Revocations

Having concluded that the criteria for revocation of the Authorizations under section 564(g)(2)(C) of the FD&C Act are met, FDA has revoked the EUAs for

Cellex Inc.'s Cellex q–SARS–CoV–2 IgG/IgM Rapid Test, BioMérieux SA's SARS–COV–2 R–GENE, Siemens Healthcare Diagnostics Inc.'s Atellica IM SARS–CoV–2 IgG (COV2G), Siemens Healthcare Diagnostics Inc.'s ADVIA Centaur SARS–CoV–2 IgG (COV2G), and Cepheid's Xpert Omni SARS–CoV–2. The revocations in their entirety follow and provide an explanation of the reasons for each revocation, as required by section 564(h)(1) of the FD&C Act.

BILLING CODE 4164–01–P

U.S. FOOD & DRUG ADMINISTRATION

December 10, 2021

James X. Li, Ph.D.
Chief Executive Officer
Cellex Inc.
76 TW Alexander Drive
Research Triangle Park, NC 27709

Re: Revocation of EUA200058

Dear Dr. Li,

This letter is in response to Cellex Inc.'s (Cellex's) request dated December 7, 2021, that the U.S. Food and Drug Administration (FDA) withdraw the Emergency Use Authorization (EUA200058) for the Cellex q-SARS-CoV-2 IgG/IgM Rapid Test issued on April 1, 2020 and revised on June 12, 2020 and September 23, 2021. In its December 7 letter, Cellex requested withdrawal of the EUA effective December 10, 2021. FDA understands that the product is no longer being distributed.

The authorization of a device for emergency use under section 564 of the Federal Food, Drug, and Cosmetic Act (the Act) (21 U.S.C. 360bbb-3) may, pursuant to section 564(g)(2) of the Act, be revoked when circumstances make such revocation appropriate to protect the public health or safety (section 564(g)(2)(C) of the Act). Because Cellex requested that FDA withdraw the authorization and FDA understands the product is no longer being distributed, FDA has determined that it is appropriate to protect the public health or safety to revoke this authorization. Accordingly, FDA hereby revokes EUA200058 for the Cellex q-SARS-CoV-2 IgG/IgM Rapid Test, pursuant to section 564(g)(2)(C) of the Act. As of the date of this letter, the Cellex q-SARS-CoV-2 IgG/IgM Rapid Test is no longer authorized for emergency use by FDA.

Notice of this revocation will be published in the *Federal Register*, pursuant to section 564(h)(1) of the Act

Sincerely,

/s/

Jacqueline A. O'Shaughnessy, Ph.D.
Acting Chief Scientist
Food and Drug Administration

U.S. FOOD & DRUG ADMINISTRATION

December 17, 2021

Sophie Vernay
Regulatory Affairs Manager
BioMérieux SA
376, Chemin de L'Orme
Marcy L'Etoile, FR 69280
Re: Revocation of EUA200445

Dear Ms. Vernay:

This letter is in response to BioMérieux SA's (BioMérieux's) request received December 10, 2021, that the U.S. Food and Drug Administration (FDA) revoke the Emergency Use Authorization (EUA200445) for the SARS-COV-2 R-GENE issued on May 6, 2020 and amended on November 6, 2020 and September 23, 2021. BioMérieux indicated that due to the current public clinical needs being met by other EUA assays that are available on the market, BioMérieux has decided to no longer commercially support the authorized product.

The authorization of a device for emergency use under section 564 of the Federal Food, Drug, and Cosmetic Act (the Act) (21 U.S.C. 360bbb-3) may, pursuant to section 564(g)(2) of the Act, be revoked when circumstances make such revocation appropriate to protect the public health or safety (section 564(g)(2)(C) of the Act). Because BioMérieux has notified FDA that BioMérieux has decided to no longer commercially support the authorized product and requested FDA revoke the authorization, FDA has determined that it is appropriate to protect the public health or safety to revoke this authorization. Accordingly, FDA hereby revokes EUA200445 for the SARS-COV-2 R-GENE, pursuant to section 564(g)(2)(C) of the Act. As of the date of this letter, the SARS-COV-2 R-GENE is no longer authorized for emergency use by FDA.

Notice of this revocation will be published in the *Federal Register*, pursuant to section 564(h)(1) of the Act.

Sincerely,

/s/

Jacqueline A. O'Shaughnessy, Ph.D.
Acting Chief Scientist
Food and Drug Administration

U.S. FOOD & DRUG ADMINISTRATION

December 17, 2021

Ayu Sucipto
Regulatory Affairs Specialist
Siemens Healthcare Diagnostics Inc.
511 Benedict Ave.
Tarrytown, NY 10591
Re: Revocation of EUA201696

Dear Ayu Sucipto:

This letter is in response to a request from Siemens Healthcare Diagnostics Inc. (Siemens), received December 9, 2021, that the U.S. Food and Drug Administration (FDA) voluntarily remove the Atellica IM SARS-CoV-2 IgG (COV2G) -EUA201696 issued on July 31, 2020 and amended on September 23, 2021 from FDA's list of authorized devices. FDA understands that the authorized product is no longer being marketed.

The authorization of a device for emergency use under section 564 of the Federal Food, Drug, and Cosmetic Act (the Act) (21 U.S.C. 360bbb-3) may, pursuant to section 564(g)(2) of the Act, be revoked when circumstances make such revocation appropriate to protect the public health or safety (section 564(g)(2)(C) of the Act). Because Siemens has notified FDA that Siemens has decided to no longer market the authorized product and requested FDA voluntarily remove the Atellica IM SARS-CoV-2 IgG (COV2G) -EUA201696 from FDA's list of authorized devices, FDA has determined that it is appropriate to protect the public health or safety to revoke this authorization. Accordingly, FDA hereby revokes EUA201696 for the Atellica IM SARS-CoV-2 IgG (COV2G), pursuant to section 564(g)(2)(C) of the Act. As of the date of this letter, the Atellica IM SARS-CoV-2 IgG (COV2G) is no longer authorized for emergency use by FDA.

Notice of this revocation will be published in the *Federal Register*, pursuant to section 564(h)(1) of the Act.

Sincerely,

/s/

Jacqueline A. O'Shaughnessy, Ph.D.
Acting Chief Scientist
Food and Drug Administration

U.S. FOOD & DRUG ADMINISTRATION

December 17, 2021

Ayu Sucipto
Regulatory Affairs Specialist
Siemens Healthcare Diagnostics Inc.
511 Benedict Ave.
Tarrytown, NY 10591
Re: Revocation of EUA201697

Dear Ayu Sucipto:

This letter is in response to a request from Siemens Healthcare Diagnostics Inc. (Siemens), received December 9, 2021, that the U.S. Food and Drug Administration (FDA) voluntarily remove the ADVIA Centaur SARS-CoV-2 IgG (COV2G) – EUA201697 issued on July 31, 2020 and amended on September 23, 2021, from FDA's list of authorized EUA devices. FDA understands that the authorized product is no longer being marketed.

The authorization of a device for emergency use under section 564 of the Federal Food, Drug, and Cosmetic Act (the Act) (21 U.S.C. 360bbb-3) may, pursuant to section 564(g)(2) of the Act, be revoked when circumstances make such revocation appropriate to protect the public health or safety (section 564(g)(2)(C) of the Act). Because Siemens has notified FDA that Siemens has decided to no longer market the authorized product and requested FDA voluntarily remove the ADVIA Centaur SARS-CoV-2 IgG (COV2G) – EUA 201697 from FDA's list of authorized EUA devices, FDA has determined that it is appropriate to protect the public health or safety to revoke this authorization. Accordingly, FDA hereby revokes EUA201697 for the ADVIA Centaur SARS-CoV-2 IgG (COV2G), pursuant to section 564(g)(2)(C) of the Act. As of the date of this letter, the ADVIA Centaur SARS-CoV-2 IgG (COV2G) is no longer authorized for emergency use by FDA.

Notice of this revocation will be published in the *Federal Register*, pursuant to section 564(h)(1) of the Act.

Sincerely,

/s/

Jacqueline A. O'Shaughnessy, Ph.D.
Acting Chief Scientist
Food and Drug Administration

U.S. FOOD & DRUG ADMINISTRATION

December 20, 2021

Mohamed Shariff
Sr. Manager, Regulatory Affairs
Cepheid
904 Caribbean Drive
Sunnyvale, CA 94089-1189
Re: Revocation of EUA202699

Dear Mohamed Shariff:

This letter is in response to a request from Cepheid, received December 17, 2021, that the U.S. Food and Drug Administration (FDA) revoke the EUA202699 for the Xpert Omni SARS-CoV-2 test issued on November 27, 2020 and amended on December 23, 2020, April 20, 2021 and September 23, 2021. Cepheid indicated that due to the current public clinical needs being met by Cepheid's other EUA tests that are available, Cepheid has not commercially distributed any of the authorized product.

The authorization of a device for emergency use under section 564 of the Federal Food, Drug, and Cosmetic Act (the Act) (21 U.S.C. 360bbb-3) may, pursuant to section 564(g)(2) of the Act, be revoked when circumstances make such revocation appropriate to protect the public health or safety (section 564(g)(2)(C) of the Act). Because Cepheid has notified FDA that Cepheid has not commercially distributed any of the Xpert Omni SARS-CoV-2 product due to the current public clinical needs being met by Cepheid's other EUA tests that are available and requested FDA revoke the EUA202699 for the Xpert Omni SARS-CoV-2 test, FDA has determined that it is appropriate to protect the public health or safety to revoke this authorization. Accordingly, FDA hereby revokes EUA202699 for the Xpert Omni SARS-CoV-2, pursuant to section 564(g)(2)(C) of the Act. As of the date of this letter, the Xpert Omni SARS-CoV-2 is no longer authorized for emergency use by FDA.

Notice of this revocation will be published in the *Federal Register*, pursuant to section 564(h)(1) of the Act.

Sincerely,

/s/

Jacqueline A. O'Shaughnessy, Ph.D.
Acting Chief Scientist
Food and Drug Administration

Cc: Suzette Chance, Senior Director Regulatory Affairs, Cepheid

Dated: January 14, 2022.

Lauren K. Roth,

Associate Commissioner for Policy.

[FR Doc. 2022–01139 Filed 1–20–22; 8:45 am]

BILLING CODE 4164–01–C

DEPARTMENT OF HEALTH AND HUMAN SERVICES

Health Resources and Services Administration

[OMB No. 0915–0298—Revision]

Agency Information Collection Activities: Proposed Collection: Public Comment Request; Maternal and Child Health Bureau Performance Measures for Discretionary Grant Information System

AGENCY: Health Resources and Services Administration (HRSA), Department of Health and Human Services.

ACTION: Notice.

SUMMARY: In compliance with the requirement for opportunity for public comment on proposed data collection projects of the Paperwork Reduction Act of 1995, HRSA announces plans to submit an Information Collection Request (ICR), described below, to the Office of Management and Budget (OMB). Prior to submitting the ICR to OMB, HRSA seeks comments from the public regarding the burden estimate, below, or any other aspect of the ICR.

DATES: Comments on this ICR should be received no later than March 22, 2022.

ADDRESSES: Submit your comments to *paperwork@hrsa.gov* or by mail to the HRSA Information Collection Clearance Officer, Room 14N136B, 5600 Fishers Lane, Rockville, MD 20857.

FOR FURTHER INFORMATION CONTACT: To request more information on the proposed project or to obtain a copy of the data collection plans and draft instruments, email *paperwork@hrsa.gov* or call Samantha Miller, the acting HRSA Information Collection Clearance Officer at (301) 443–9094.

SUPPLEMENTARY INFORMATION: When submitting comments or requesting information, please include the information collection request title for reference.

Information Collection Request Title: Maternal and Child Health Bureau (MCHB) Performance Measures for Discretionary Grant Information System (DGIS), OMB No. 0915–0298—Revision.

Abstract: Approval from OMB is sought to implement minor revisions to the MCHB Performance Measures for DGIS. Most of these measures are specific to certain types of programs and are not required of all grantees. The measures are categorized by domain (Adolescent Health, Capacity Building, Child Health, Children with Special Health Care Needs, Lifecourse/Crosscutting, Maternal/Women Health, and Perinatal/Infant Health), in addition to some program-specific measures. Grant programs are assigned domains based on their activities and individual grantees respond to only a limited number of performance measures that are relevant to their specific program.

Need and Proposed Use of the Information: The performance data collected through the DGIS serves several purposes, including grantee monitoring, program planning, performance reporting, and the ability to demonstrate alignment between MCHB discretionary programs and the Title V MCH Services Block Grant program. HRSA is making the following changes to the current OMB package for MCHB DGIS to more closely align data collection forms with current program activities:

Removing the following existing forms: Core 1 (Grant Impact), Capacity Building 2 (Technical Assistance), Capacity Building 7 (Direct Annual Access to Maternal and Child Health (MCH) Data), Training Form 13 (Diverse Adolescent Involvement (LEAH-specific)), Financial Form 2 (Project Funding Profile), and Financial Form 4 (Project Budget and Expenditures);

Adding the following new form: Training Form 14 (Teleconsultation and Training for Mental and Behavioral Health) and Leadership, Education, and Advancement in Undergraduate Pathways Training Program Trainee Information Form;

Revising the following existing forms: F2F (Family to Family Form 1), Financial Form 1 (MCHB Project Budget Details), Financial Form 4 (new name: MCH Discretionary Grant Project Abstract), and MCH Training Program Data Forms;

Revising and Renumbering the following forms: Core 3 (Health Equity) will become the new Core 1 (Health Equity), Financial Form 3 (Budget Details by Types of Individuals Served) will become the new Financial Form 2 (Budget Details by Types of Individuals Served), Financial Form 5 (Number of Individuals Served (Unduplicated)) will become the new Financial Form 3 (Number of Individuals Served (Unduplicated)), and Financial Form 6 (Project Abstract) will become the new Financial Form 4 (Project Abstract); and

Renumbering the following forms: Core 2 (Quality Improvement) will become the new Capacity Building 4 (Quality Improvement), Capacity Building 3 (Impact Measurement) will become the new Capacity Building 2 (Impact Measurement), Capacity Building 4 (Sustainability) will become the new Capacity Building 3 (Sustainability), and Training 14 (Medium-Term Trainees Skill and Knowledge (PPC-Specific)) will become the new Training 13 (Medium-Term Trainees Skill and Knowledge (PPC-Specific)).

Non-substantive revisions also include updates to terminology, goals, benchmark data sources, and significance sections included in the measures' detail sheets. A performance measure detail sheet defines and describes each performance measure. Forms and detail sheets showing the proposed revisions are available upon request.

This revision will facilitate more efficient and accurate reporting of information related to capacity building activities, financial and demographic data, and training activities.

Likely Respondents: The grantees for MCHB Discretionary Grant Programs.

Burden Statement: Burden in this context means the time expended by persons to generate, maintain, retain, disclose or provide the information requested. This includes the time needed to review instructions; to develop, acquire, install, and utilize technology and systems for the purpose of collecting, validating and verifying information, processing and maintaining information, and disclosing and providing information; to train personnel and to be able to respond to a collection of information; to search data sources; to complete and review the collection of information; and to transmit or otherwise disclose the information. The total annual burden hours estimated for this ICR are summarized in the table below.

TOTAL ESTIMATED ANNUALIZED BURDEN HOURS

Form	Number of respondents	Responses per respondent	Total responses	Burden hours per response	Total burden hours
Grant Report	700	1	700	36	25,200
Total	700		700		25,200

HRSA specifically requests comments on (1) the necessity and utility of the proposed information collection for the proper performance of the agency's functions, (2) the accuracy of the estimated burden, (3) ways to enhance the quality, utility, and clarity of the information to be collected, and (4) the use of automated collection techniques or other forms of information technology to minimize the information collection burden.

Maria G. Button,

Director, Executive Secretariat.

[FR Doc. 2022–01114 Filed 1–20–22; 8:45 am]

BILLING CODE 4165–15–P

DEPARTMENT OF HEALTH AND HUMAN SERVICES

Meeting of the Tick-Borne Disease Working Group

AGENCY: Office of the Assistant Secretary for Health, Office of the Secretary, Department of Health and Human Services.

ACTION: Notice.

SUMMARY: As required by the Federal Advisory Committee Act, the Department of Health and Human Services (HHS) is hereby giving notice that the Tick-Borne Disease Working Group (TBDWG) will hold a virtual meeting. The meeting will be open to the public. For this meeting, the TBDWG will (1) hear presentations from six subcommittees on findings and potential actions from reports prepared for the TBDWG to consider and (2) further discuss plans for developing the next report to the HHS Secretary and Congress on federal tick-borne activities and research, taking into consideration the 2018 and 2020 report. The 2022 report will address a wide range of topics related to tick-borne diseases, such as, surveillance, prevention, diagnosis, diagnostics, and treatment; identify advances made in research, as well as overlap and gaps in tick-borne disease research; and provide recommendations regarding any appropriate changes or improvements to such activities and research.

DATES: The meeting will be held online via webcast on February 28–March 1, 2022 from approximately 9:00 a.m. to 5:00 p.m. ET (times are tentative and subject to change) each day. The confirmed times and agenda items for the meeting will be posted on the TBDWG web page at *https://www.hhs.gov/ash/advisory-committees/tickbornedisease/meetings/2022-02-28/index.html* when this information becomes available.

FOR FURTHER INFORMATION CONTACT: James Berger, Designated Federal Officer for the TBDWG; Office of Infectious Disease and HIV/AIDS Policy, Office of the Assistant Secretary for Health, Department of Health and Human Services, Mary E. Switzer Building, 330 C Street SW, Suite L600, Washington, DC 20024. Email: *tickbornedisease@hhs.gov.* Phone: 202–795–7608.

SUPPLEMENTARY INFORMATION: Registration information can be found on the meeting website at *https://www.hhs.gov/ash/advisory-committees/tickbornedisease/meetings/2022-02-28/index.html* when it becomes available. The public will have an opportunity to present their views to the TBDWG orally during the meeting's public comment session or by submitting a written public comment. Comments should be pertinent to the meeting discussion. Persons who wish to provide verbal or written public comment should review instructions at *https://www.hhs.gov/ash/advisory-committees/tickbornedisease/meetings/2022-02-28/index.html* and respond by midnight February 16, 2022 ET. Verbal comments will be limited to three minutes each to accommodate as many speakers as possible during the 30 minute session. Written public comments will be accessible to the public on the TBDWG web page prior to the meeting.

Background and Authority: The Tick-Borne Disease Working Group was established on August 10, 2017, in accordance with Section 2062 of the 21st Century Cures Act, and the Federal Advisory Committee Act, 5 U.S.C. App., as amended, to provide expertise and review federal efforts related to all tick-borne diseases, to help ensure interagency coordination and minimize overlap, and to examine research priorities. The TBDWG is required to submit a report to the HHS Secretary and Congress on their findings and any recommendations for the federal response to tick-borne disease every two years.

Dated: January 10, 2022.

James J. Berger,

Designated Federal Officer, Tick-Borne Disease Working Group, Office of Infectious Disease and HIV/AIDS Policy.

[FR Doc. 2022–01106 Filed 1–20–22; 8:45 am]

BILLING CODE 4150–28–P

DEPARTMENT OF HEALTH AND HUMAN SERVICES

National Advisory Committee on Children and Disasters

AGENCY: Office of the Assistant Secretary for Preparedness and Response (ASPR), Department of Health and Human Services (HHS).

ACTION: Notice.

SUMMARY: The National Advisory Committee on Children and Disasters (NACCD or the Committee) is required by section 2811A of the PHS Act as amended by the Pandemic and All Hazards Preparedness and Advancing Innovation Act (PAHPAIA) and governed by the provisions of the Federal Advisory Committee Act (FACA). The NACCD shall evaluate issues and programs and provide findings, advice, and recommendations to the Secretary of HHS to support and enhance all-hazards public health and medical preparedness, response, and recovery aimed at meeting the unique needs of children and their families across the entire spectrum of their wellbeing. The Secretary of HHS has formally delegated authority to operate the NACCD to ASPR.

DATES: The NACCD will conduct an inaugural public meeting (virtual) on February 17, 2022. The new advisory committee will be sworn in along with the presentation and discussion of challenges, opportunities, and priorities for national public health and medical preparedness, response and recovery, specific to the needs of children and their families in disasters. A more

detailed agenda and meeting registration link will be available on the NACCD meeting website *https://www.phe.gov/Preparedness/legal/boards/naccd/Pages/default.aspx.*

ADDRESSES: Members of the public may attend the meeting via a toll-free phone number or Zoom teleconference, which requires pre-registration. The meeting link to pre-register will be posted on *https://www.phe.gov/Preparedness/legal/boards/naccd/Pages/default.aspx.* Members of the public may provide written comments or submit questions for consideration by the NACCD at any time via email to *NACCD@hhs.gov.* Members of the public are also encouraged to provide comments after the meeting.

FOR FURTHER INFORMATION CONTACT: Zhoowan Jackson, NACCD Designated Federal Officer, Office of the Assistant Secretary for Preparedness and Response (ASPR), Department of Health and Human Services (HHS), Washington, DC; 202–205–4217, *NACCD@hhs.gov.*

SUPPLEMENTARY INFORMATION: The NACCD invites those who are involved in or represent a relevant industry, academia, health profession, health care consumer organization, or state, Tribal, territorial or local government to request up to four minutes to address the committee in person via Zoom. Requests to provide remarks to the NACCD during the public meeting must be sent to *NACCD@hhs.gov* at least 15 days prior to the meeting along with a brief description of the topic. We would specifically like to request inputs from the public on challenges, opportunities, and strategic priorities for national public health and medical preparedness, response and recovery specific to the needs of children and their families in disasters. Presenters who are selected for the public meeting will have audio only for up to four minutes during the meeting. Slides, documents, and other presentation material sent along with the request to speak will be provided to the committee members separately. Please indicate additionally whether the presenter will be willing to take questions from the committee members (at their discretion) immediately following their presentation (for up to four additional minutes).

Dawn O'Connell,

Assistant Secretary for Preparedness and Response.

[FR Doc. 2022–01161 Filed 1–20–22; 8:45 am]

BILLING CODE 4150–37–P

DEPARTMENT OF HEALTH AND HUMAN SERVICES

Office of the Secretary

Annual Update of the HHS Poverty Guidelines

AGENCY: Department of Health and Human Services.

ACTION: Notice.

SUMMARY: This notice provides an update of the Department of Health and Human Services (HHS) poverty guidelines to account for last calendar year's increase in prices as measured by the Consumer Price Index.

DATES: January 12, 2022 unless an office administering a program using the guidelines specifies a different effective date for that particular program.

ADDRESSES: Office of the Assistant Secretary for Planning and Evaluation, Room 404E, Humphrey Building, Department of Health and Human Services, Washington, DC 20201.

FOR FURTHER INFORMATION CONTACT: For information about how the guidelines are used or how income is defined in a particular program, contact the Federal, state, or local office that is responsible for that program. For information about poverty figures for immigration forms, the Hill-Burton Uncompensated Services Program, and the number of people in poverty, use the specific telephone numbers and addresses given below.

For general questions about the poverty guidelines themselves, contact Kendall Swenson, Office of the Assistant Secretary for Planning and Evaluation, Room 404E.3, Humphrey Building, Department of Health and Human Services, Washington, DC 20201—telephone: (202) 795–7309—or visit *http://aspe.hhs.gov/poverty/.*

For information about the percentage multiple of the poverty guidelines to be used on immigration forms such as USCIS Form I–864, Affidavit of Support, contact U.S. Citizenship and Immigration Services at 1–800–375–5283. You also may visit *https://www.uscis.gov/i-864.*

For information about the Hill-Burton Uncompensated Services Program (free or reduced-fee health care services at certain hospitals and other facilities for persons meeting eligibility criteria involving the poverty guidelines), contact the Health Resources and Services Administration Information Center at 1–800–638–0742. You also may visit *https://www.hrsa.gov/get-health-care/affordable/hill-burton/index.html.*

For information about the number of people in poverty, visit the Poverty section of the Census Bureau's website at *https://www.census.gov/topics/income-poverty/poverty.html* or contact the Census Bureau's Customer Service Center at 1–800–923–8282 (toll-free) or visit *https://ask.census.gov* for further information.

SUPPLEMENTARY INFORMATION:

Background

Section 673(2) of the Omnibus Budget Reconciliation Act (OBRA) of 1981 (42 U.S.C. 9902(2)) requires the Secretary of the Department of Health and Human Services to update the poverty guidelines at least annually, adjusting them on the basis of the Consumer Price Index for All Urban Consumers (CPI–U). The poverty guidelines are used as an eligibility criterion by Medicaid and a number of other Federal programs. The *poverty guidelines* issued here are a simplified version of the *poverty thresholds* that the Census Bureau uses to prepare its estimates of the number of individuals and families in poverty.

As required by law, this update is accomplished by increasing the latest published Census Bureau poverty thresholds by the relevant percentage change in the Consumer Price Index for All Urban Consumers (CPI–U). The guidelines in this 2022 notice reflect the 4.7 percent price increase between calendar years 2020 and 2021. After this inflation adjustment, the guidelines are rounded and adjusted to standardize the differences between family sizes. In rare circumstances, the rounding and standardizing adjustments in the formula result in small decreases in the poverty guidelines for some household sizes even when the inflation factor is not negative. In cases where the year-to-year change in inflation is not negative and the rounding and standardizing adjustments in the formula result in reductions to the guidelines from the previous year for some household sizes, the guidelines for the affected household sizes are fixed at the prior year's guidelines. As in prior years, these 2022 guidelines are roughly equal to the poverty thresholds for calendar year 2021, which the Census Bureau expects to publish in final form in September 2022.

The poverty guidelines continue to be derived from the Census Bureau's current official poverty thresholds; they are not derived from the Census Bureau's Supplemental Poverty Measure (SPM).

The following guideline figures represent annual income.

2022 POVERTY GUIDELINES FOR THE 48 CONTIGUOUS STATES AND THE DISTRICT OF COLUMBIA

Persons in family/household	Poverty guideline
1	$13,590
2	18,310
3	23,030
4	27,750
5	32,470
6	37,190
7	41,910
8	46,630

For families/households with more than 8 persons, add $4,720 for each additional person.

2022 POVERTY GUIDELINES FOR ALASKA

Persons in family/household	Poverty guideline
1	$16,990
2	22,890
3	28,790
4	34,690
5	40,590
6	46,490
7	52,390
8	58,290

For families/households with more than 8 persons, add $5,900 for each additional person.

2022 POVERTY GUIDELINES FOR HAWAII

Persons in family/household	Poverty guideline
1	$15,630
2	21,060
3	26,490
4	31,920
5	37,350
6	42,780
7	48,210
8	53,640

For families/households with more than 8 persons, add $5,430 for each additional person.

Separate poverty guideline figures for Alaska and Hawaii reflect Office of Economic Opportunity administrative practice beginning in the 1966–1970 period. (Note that the Census Bureau poverty thresholds—the version of the poverty measure used for statistical purposes—have never had separate figures for Alaska and Hawaii.) The poverty guidelines are not defined for Puerto Rico or other outlying jurisdictions. In cases in which a Federal program using the poverty guidelines serves any of those jurisdictions, the Federal office that administers the program is generally responsible for deciding whether to use the contiguous-states-and-DC guidelines for those jurisdictions or to follow some other procedure.

Due to confusing legislative language dating back to 1972, the poverty guidelines sometimes have been mistakenly referred to as the ''OMB'' (Office of Management and Budget) poverty guidelines or poverty line. In fact, OMB has never issued the guidelines; the guidelines are issued each year by the Department of Health and Human Services. The poverty guidelines may be formally referenced as ''the poverty guidelines updated periodically in the **Federal Register** by the U.S. Department of Health and Human Services under the authority of 42 U.S.C. 9902(2).''

Some federal programs use a percentage multiple of the guidelines (for example, 125 percent or 185 percent of the guidelines), as noted in relevant authorizing legislation or program regulations. Non-Federal organizations that use the poverty guidelines under their own authority in non-Federally-funded activities also may choose to use a percentage multiple of the guidelines.

The poverty guidelines do not make a distinction between farm and non-farm families, or between aged and non-aged units. (Only the Census Bureau poverty thresholds have separate figures for aged and non-aged one-person and two-person units.)

This notice does not provide definitions of such terms as ''income'' or ''family'' as there is considerable variation of these terms among programs that use the poverty guidelines. The legislation or regulations governing each program define these terms and determine how the program applies the poverty guidelines. In cases where legislation or regulations do not establish these definitions, the entity that administers or funds the program is responsible to define such terms as ''income'' and ''family.'' Therefore, questions such as net or gross income, counted or excluded income, or household size should be directed to the entity that administers or funds the program.

Dated: January 18, 2022.

Xavier Becerra,

Secretary, Department of Health and Human Services.

[FR Doc. 2022–01166 Filed 1–20–22; 8:45 am]

BILLING CODE 4150–05–P

DEPARTMENT OF HEALTH AND HUMAN SERVICES

Meeting of the National Vaccine Advisory Committee

AGENCY: Office of Infectious Disease and HIV/AIDS Policy, Office of the Assistant Secretary for Health, Office of the Secretary, Department of Health and Human Services.

ACTION: Notice.

SUMMARY: As stipulated by the Federal Advisory Committee Act, the Department of Health and Human Services (HHS) is hereby giving notice that the National Vaccine Advisory Committee (NVAC) will hold a virtual meeting. The meeting will be open to the public and public comment will be heard during the meeting.

DATES: The meeting will be held February 10–11, 2022. The confirmed meeting times and agenda will be posted on the NVAC website at *http://www.hhs.gov/nvpo/nvac/meetings/index.html* as soon as they become available.

ADDRESSES: Instructions regarding attending this meeting will be posted online at: *http://www.hhs.gov/nvpo/nvac/meetings/index.html* at least one week prior to the meeting. Pre-registration is required for those who wish to attend the meeting or participate in public comment. Please register at *http://www.hhs.gov/nvpo/nvac/meetings/index.html.*

FOR FURTHER INFORMATION CONTACT: Ann Aikin, Acting Designated Federal Officer, at the Office of Infectious Disease and HIV/AIDS Policy, U.S. Department of Health and Human Services, Mary E. Switzer Building, Room L618, 330 C Street SW, Washington, DC 20024. Email: *nvac@hhs.gov.*

SUPPLEMENTARY INFORMATION: Pursuant to Section 2101 of the Public Health Service Act (42 U.S.C. 300aa–1), the Secretary of HHS was mandated to establish the National Vaccine Program to achieve optimal prevention of human infectious diseases through immunization and to achieve optimal prevention against adverse reactions to vaccines. The NVAC was established to provide advice and make recommendations to the Director of the National Vaccine Program on matters related to the Program's responsibilities. The Assistant Secretary for Health serves as Director of the National Vaccine Program.

The NVAC celebrates 35 years and will kick off the meeting reflecting on accomplishments and outling

opportunities to advance the vaccine system in the United States. The NVAC will hear presentations on global immunization, vaccinating the workforce, correlates of protection, data exchange and vaccine safety. Please note that agenda items are subject to change, as priorities dictate. Information on the final meeting agenda will be posted prior to the meeting on the NVAC website: *http://www.hhs.gov/nvpo/nvac/index.html.*

Members of the public will have the opportunity to provide comment at the NVAC meeting during the public comment period designated on the agenda. Public comments made during the meeting will be limited to three minutes per person to ensure time is allotted for all those wishing to speak. Individuals are also welcome to submit written comments in advance. Written comments should not exceed three pages in length. Individuals submitting comments should email their written comments or their request to provide a comment during the meeting to *nvac@hhs.gov* at least five business days prior to the meeting.

Dated: January 9, 2022.

Ann Aikin,

Acting Designated Federal Official, Office of the Assistant Secretary for Health.

[FR Doc. 2022–01101 Filed 1–20–22; 8:45 am]

BILLING CODE 4150–44–P

DEPARTMENT OF HOMELAND SECURITY

[Docket No. ICEB–2021–0011]

RIN 1653–ZA23

Update to the Department of Homeland Security STEM Designated Degree Program List

AGENCY: U.S. Immigration and Customs Enforcement (ICE); Department of Homeland Security (DHS).

SUMMARY: This notice announces that the Secretary of Homeland Security (Secretary) is amending the DHS STEM Designated Degree Program List by adding 22 qualifying fields of study and a corresponding Department of Education Classification of Instructional Programs (CIP) code for each. The list is used to determine whether a degree obtained by certain F–1 nonimmigrant students following the completion of a program of study qualifies as a science, technology, engineering, or mathematics (STEM) degree as determined by DHS, for the F–1 student to be eligible to apply for a 24-month extension of their post-completion optional practical training (OPT).

DATES: DHS adopts the list announced in this notice as of January 21, 2022.

FOR FURTHER INFORMATION CONTACT: Sharon Snyder, Unit Chief, Policy and Response Center Unit, Student and Exchange Visitor Program; U.S. Immigration and Customs Enforcement, 500 12th Street SW, Stop 5600, Washington, DC 20536–5600; email: *sevp@ice.dhs.gov,* telephone: (703) 603–3400. This is not a toll-free number. Program information is available at *http://www.ice.gov/sevis/.*

SUPPLEMENTARY INFORMATION:

What action is DHS taking under this notice?

The Department of Homeland Security (DHS) is updating the list of STEM fields of study that fall within the regulatory definition of ''STEM field.'' The list, known as the DHS STEM Designated Degree Program List (''STEM list''),[1] is used to determine whether a degree obtained by an F–1 nonimmigrant student qualifies as a STEM degree, as required for the F–1 nonimmigrant student to be eligible to apply for a STEM OPT extension. Similar prior lists were updated through Student and Exchange Visitor Program (SEVP) Broadcast Messages in 2011 [2] and 2012.[3] The current list was established in connection with a Final Rule issued in 2016. In 2021, DHS updated the list to include technical changes to CIP codes made by the Department of Education's National Center for Education Statistics (NCES) as part of NCES's 2020 CIP update.[4]

Why is DHS taking this action?

In 2016, DHS published a Final Rule providing a 24-month extension of OPT for F–1 nonimmigrant students who majored in a designated STEM field of study. *See* 81 FR 13039 (Mar. 11, 2016) (''*Improving and Expanding Training Opportunities for F–1 Nonimmigrant Students With STEM Degrees and Cap-Gap Relief for All Eligible F–1 Students'')* (''2016 STEM Rule''). The 2016 STEM Rule stated that DHS will continue to accept for consideration suggested additions or deletions to the STEM list and may publish updates to the STEM list in the **Federal Register**. Since publication of the 2016 STEM Rule, DHS has received from the public 97 suggested new fields of study to add to the STEM list. DHS has not received any input from the public suggesting fields to remove. DHS is now announcing that a number of the fields of study submitted for consideration will be added to the STEM list.[5] Nominators may resubmit a nomination with additional supporting views and evidence at any time if their original submission was not addressed in this notice.

What is OPT and STEM OPT?

OPT is one type of work permission available to certain F–1 nonimmigrant students. It allows students (except those in English language training programs) to obtain real-world work experience directly related to their field of study.

The STEM OPT extension is a 24-month extension of OPT available to F–1 nonimmigrant students who have completed 12 months of OPT and received a degree in an approved STEM field of study as designated by the STEM list.

Who may be impacted by this notice?

This notice may impact qualifying F–1 nonimmigrant students who seek a 24-month extension of post-completion OPT.

Where can I find the STEM list?

The STEM list can be found in the docket for this notice and on the SEVP website.[6]

What authority does DHS have to make changes to the STEM list?

The Secretary has broad authority to administer and enforce the nation's immigration laws. *See generally* 6 U.S.C. 202; Immigration and Nationality Act of 1952, as amended (INA), Sec. 103, 8 U.S.C. 1103. Section 101(a)(15)(F)(i) of the INA establishes the F–1 nonimmigrant classification for individuals who wish to enter the United States temporarily and solely for the purpose of pursuing a full course of study at an academic institution or accredited language training school certified by the U.S. Immigration and Customs Enforcement's (ICE) SEVP. *See* INA Sec. 101(a)(15)(F)(i), 8 U.S.C. 1101(a)(15)(F)(i). The INA provides the

[1] ICE, DHS STEM Designated Degree Program List, *https://www.ice.gov/sites/default/files/documents/stem-list.pdf (last visited Nov. 9, 2021).*

[2] See SEVP, ''Broadcast Message 1105–02: Additions to the STEM-Designated Degree Program List,'' May 12, 2011.

[3] See SEVP, ''Broadcast Message 1204–07: Additions to the STEM-Designated Degree Program List,'' May 11, 2012.

[4] See SEVP, ''Broadcast Message 2102–01: Updated DHS STEM Designated Degree Program List Available,'' Feb. 1, 2021, *available at https://www.ice.gov/doclib/sevis/pdf/bcm2102-01.pdf* (last visited Nov. 9, 2021).

[5] While the 2016 STEM Rule provided for ''additions or deletions to the list,'' no deletions will be made at this time.

[6] *See* SEVP, Eligible CIP Codes for the STEM OPT Extension, *https://studyinthestates.dhs.gov/stem-opt-hub/additional-resources/eligible-cip-codes-for-the-stem-opt-extension* (last visited Nov. 9, 2021).

Secretary with broad authority to determine the time and conditions under which nonimmigrants, including F–1 students, may be admitted to the United States. *See* INA Sec. 214(a)(1), 8 U.S.C. 1184(a)(1). The Secretary also has broad authority to determine which individuals are authorized for employment in the United States. *See* INA Sec. 274A(h)(3), 8 U.S.C. 1324a(h)(3). Finally, the Secretary, or his or her designee, has authority to maintain the STEM list, which is a complete list of qualifying degree program categories published on the SEVP website at *http://www.ice.gov/sevis.* Changes that are made to the STEM list may also be published in a notice in the **Federal Register**. *See* 8 CFR 214.2(f)(10)(ii)(C)(*2*)(*ii*).

Who may nominate a CIP code?

Interested parties, including members of the public, may nominate a CIP code for inclusion on or removal from the STEM list.

How does DHS assess nominations?

Nominations to add or remove degrees from the STEM list are assessed consistent with the authorizing regulation.[7] As defined in the governing regulations, a STEM field is a field included in the CIP taxonomy [8] that falls within the two-digit series containing engineering, biological sciences, mathematics and statistics, and physical sciences, or a related field, which generally involves research, innovation, or development of new technologies using engineering, mathematics, computer science, or natural sciences (including physical, biological, and agricultural sciences). *See* 8 CFR 214.2(f)(10)(ii)(C)(*2*)(*i*). This definition is widely used by U.S. institutions of higher education and provides an objective measure by which to identify STEM fields of study.

As noted above, by regulation,[9] DHS has designated four areas as core STEM fields and lists these four areas at the two-digit CIP code level. As a result, any new additions to those areas are automatically included on the STEM list. These four areas are: Engineering (CIP code 14), Biological and Biomedical Sciences (CIP code 26), Mathematics and Statistics (CIP code 27), and Physical Sciences (CIP code 40). If a degree is not within the four core fields, DHS considers whether the degree is in a STEM-related field listed at the six-digit level. The six-digit designation allows for individualized review of a specific field of study to ensure it meets the ''related field'' criteria of ''involving research, innovation, or development of new technologies using engineering, mathematics, computer science, or natural sciences (including physical, biological, and agricultural sciences).''

SEVP evaluates submissions to assess whether the degree is generally considered to be a STEM degree by recognized authorities, including input from educational institutions, governmental entities, and non-governmental entities. SEVP also reviews the NCES definition of the CIP code and any supporting material submitted by the nominator such as the required curriculum for the degree and the extent to which it is comprised of core STEM disciplines as well as research, innovation, and development of new technologies using engineering, mathematics, computer science, or natural sciences (including physical, biological, and agricultural sciences). The degree requirements and curriculum may be assessed across academic institutions to ensure that the core aspects of the degree are sufficiently consistent among educational institutions.

A proposed addition does not have to have all supporting elements to be added to the STEM list. DHS assesses the totality of a submission and may approve a proposed CIP code if it presents sufficient evidence and reasoning to establish that the regulatory definition of a STEM field encompasses the degree under consideration.

How may a nomination be submitted?

Nominations may be submitted by email to the SEVP Response Center at *SEVP@ice.dhs.gov,* with the subject line ''Attention: STEM CIP Code Nomination.''

What new fields of study will be added to the STEM list?

The following fields of study are being added to the STEM list:

Bioenergy (03.0210). *A program of study that focuses on the environmental and economic impact of using plants and microbes for the production of bio-based fuels such as ethanol and biodiesel. Includes instruction in biochemical engineering, bioprocessing, bioseparations, conversion, feedstock, economics, environmental sustainability, hydrology, and natural resource management.* This is a new CIP code created by NCES and added to its decennial 2020 update to the CIP. This field of study, as described in the NCES definition, is comprised of STEM disciplines such as research, innovation, and development of new technologies using biological science. Bioenergy is classified as STEM by the Department of Veterans Affairs [10] and the National Science Foundation.[11]

Forestry, General (03.0501). *A program that generally prepares individuals to manage and develop forest areas for economic, recreational, and ecological purposes. Includes instruction in forest-related sciences, mapping, statistics, harvesting and production technology, natural resources management and economics, wildlife sciences, administration, and public relations.* This field of study, as described in the NCES definition, is comprised of STEM disciplines such as research, innovation, or development of new technologies using biological science. Forestry, General is classified as STEM by the Department of Veterans Affairs and the National Science Foundation. This CIP code nomination included the Society of American Foresters' curricular requirements, which demonstrated instruction in STEM disciplines.

Forest Resources Production and Management (03.0510). *A program that focuses on the application of forestry principles to the production, harvesting, and processing of forest resources and that prepares individuals to perform associated technical and managerial functions. Includes instruction in forest production and utilization, industrial forestry, agroforestry, transplantation, timber harvesting, selection and identification of trees, processing technologies and systems, equipment operations and maintenance, and related management skills.* This field of study, as described in the NCES definition, is comprised of STEM disciplines such as research, innovation, or development of new technologies using biological science. Forest Resources Production and Management is classified as STEM by the Department of Veterans Affairs and the National Science Foundation. This CIP code nomination included the Society of American Foresters' curricular requirements, which demonstrated instruction in STEM disciplines.

[7] *See* 8 CFR 214.2(f)(10)(ii)(C)(*2*).

[8] The CIP taxonomy is a taxonomic scheme that was developed by the Department of Education's National Center for Education Statistics (NCES) to support the accurate tracking and reporting of fields of study and program completion activity. See the NCES website (*https://nces.ed.gov/ipeds/cipcode/Default.aspx?y=55*) (last visited Sept. 22, 2021).

[9] 8 CFR 214.2(f)(10)(ii)(C)(*2*)(*i*).

[10] See Department of Veterans Affairs STEM Designated Degree Program List at *https://benefits.va.gov/gibill/docs/fgib/STEM_Program_List.pdf* (last accessed Nov. 2, 2021).

[11] See National Science Foundation STEM Classification of Instructional Programs Crosswalk at *https://www.lsamp.org/help/help_stem_cip.cfm* (last accessed Nov. 2, 2021).

Human-Centered Technology Design (11.0105). *A program that focuses on incorporating a human perspective into designing, researching, and creating technological interfaces. Includes instruction in design, human-computer interaction, learning, neuroscience, perception, product design, user-centered design, and usability.* This is a new CIP code created by NCES and added to its decennial 2020 update to the CIP. The NCES definition of this field of study describes instruction in the STEM disciplines such as research, innovation, or development of new technologies using computer science and neuroscience, among other disciplines. Human-Centered Technology Design is classified as STEM by the Department of Veterans Affairs and the National Science Foundation.

Cloud Computing (11.0902). *A program that prepares individuals to design and implement enterprise software systems that rely on distributed computing and service-oriented architecture, including databases, web services, cloud computing, and mobile apps. Includes instruction in data management, distributed and cloud computing, enterprise software architecture, enterprise and cloud security, mobile systems and applications, server administration, and web development.* This is a new CIP code created by NCES and added to its decennial 2020 update to the CIP. The NCES definition of this field of study describes instruction in the STEM disciplines such as research, innovation, or development of new technologies using computer science. Cloud Computing is classified as STEM by the Department of Veterans Affairs.

Anthrozoology (30.3401). *A program of study that combines anthropology and zoology in order to examine the relationship between animals and humans. Includes instruction in animal behavior and communication, animal welfare, animal conservation, animal training, animal-assisted therapy techniques, biology, ethics, and education.* This is a new CIP code created by NCES and added to its decennial 2020 update to the CIP. The NCES definition of this field of study describes instruction in the STEM disciplines such as research, innovation, or development of new technologies using biological science.

Climate Science (30.3501). *A program that focuses on the scientific study of the climate system of the earth with emphasis on the physical, dynamical, and chemical interactions of the atmosphere, ocean, land, ice, and the terrestrial and marine biospheres. Includes instruction in biology, chemistry, climate analysis, climate change adaptation/mitigation, climate policy, ecology, energy development, environmental impacts, marine chemistry, meteorology, and oceanography.* This is a new CIP code created by NCES and added to its decennial 2020 update to the CIP. The NCES definition of this field of study describes instruction in the STEM disciplines such as research, innovation, or development of new technologies using physical and biological sciences.

Earth Systems Science (30.3801). *A program that focuses on the interaction of the Earth's oceanographic, atmospheric, and terrestrial systems. Includes instruction in biogeochemistry, climate dynamics, geographical information science (GIS), geophysics, hydrology, landscape ecology, meteorology, and satellite remote sensing analysis.* This is a new CIP code created by NCES and added to its decennial 2020 update to the CIP. The NCES definition of this field of study describes instruction in the STEM disciplines such as research, innovation, or development of new technologies using physical and biological sciences.

Economics and Computer Science (30.3901). *A program of study that focuses on the theoretical and practical connections between computer science and economics. Includes instruction in data analysis, database design, data mining, computer algorithms, economics, econometrics, computer programing, mathematics, and statistics.* This is a new CIP code created by NCES and added to its decennial 2020 update to the CIP. The NCES definition of this field of study describes instruction in the STEM disciplines such as research, innovation, or development of new technologies using mathematics and computer science.

Environmental Geosciences (30.4101). *A program that focuses on the scientific study of the environmental implications of geological processes and human activities on Earth. Includes instruction in environmental/natural resource management, geographic information systems (GIS), geology, hydrology, regulatory agency compliance, hazard identification and mitigation, environmental law, environmental policy, and sustainability studies.* This is a new CIP code created by NCES and added to its decennial 2020 update to the CIP. The NCES definition of this field of study describes instruction in the STEM disciplines such as research, innovation, or development of new technologies using biological science and computer science.

Geobiology (30.4301). *A program that focuses on the scientific study of how living things interact with geological systems. Includes instruction in evolution of Earth systems, geochemistry, geology, geomicrobiology, marine chemistry, paleobiology, paleoecology, paleontology, and petrology.* This is a new CIP code created by NCES and added to its decennial 2020 update to the CIP. The NCES definition of this field of study describes instruction in the STEM disciplines such as research, innovation, or development of new technologies using biological science.

Geography and Environmental Studies (30.4401). *A program that focuses on interactions between people and the natural and built environments. Includes instruction in climate science, sustainability, environmental science and policy, research methods, geographic information systems (GIS), human geography, physical geography, remote sensing, and public policy.* This is a new CIP code created by NCES and added to its decennial 2020 update to the CIP. The NCES definition of this field of study describes instruction in the STEM disciplines such as research, innovation, or development of new technologies using biological science and computer science.

Mathematical Economics (30.4901). *A program that focuses on the application of mathematical methods to the development of economic theory, models, and quantitative analysis. Includes instruction in data analysis, applied business economics, calculus, econometrics, linear algebra, microeconomic theory, probability, and statistical methods.* This is a new CIP code created by NCES and added to its decennial 2020 update to the CIP. The NCES definition of this field of study describes instruction in the STEM disciplines such as research, innovation, or development of new technologies using mathematics.

Mathematics and Atmospheric/Oceanic Science (30.5001). *A program that focuses on the application of mathematics to atmospheric and oceanic problems. Includes instruction in chemistry, physics, atmospheric/ocean dynamics, climatology, weather simulation, climate modeling, mathematics, oceanography, and atmospheric science.* This is a new CIP code created by NCES and added to its decennial 2020 update to the CIP. The NCES definition of this field of study describes instruction in the STEM disciplines such as research, innovation, or development of new technologies using mathematics and physical sciences.

Data Science, General (30.7001). *A program that focuses on the analysis of large-scale data sources from the interdisciplinary perspectives of applied statistics, computer science, data storage, data representation, data modeling, mathematics, and statistics. Includes instruction in computer algorithms, computer programming, data management, data mining, information policy, information retrieval, mathematical modeling, quantitative analysis, statistics, trend spotting, and visual analytics.* This is a new CIP code created by NCES and added to its decennial 2020 update to the CIP. The NCES definition of this field of study describes instruction in the STEM disciplines such as research, innovation, or development of new technologies using mathematics and computer science. This CIP code nomination included a letter of support from the Academic Data Science Alliance, which was signed by dozens of representatives of institutions of higher education and corporate and academic entities.

Data Analytics, General (30.7101). *A program that prepares individuals to apply data science to generate insights from data and identify and predict trends. Includes instruction in computer databases, computer programming, inference, machine learning, optimization, probability and stochastic models, statistics, strategy, uncertainty quantification, and visual analytics.* This is a new CIP code created by NCES and added to its decennial 2020 update to the CIP. The NCES definition of this field of study describes instruction in the STEM disciplines such as research, innovation, or development of new technologies using mathematics and computer science.

Business Analytics (30.7102). *A program that prepares individuals to apply data science to solve business challenges. Includes instruction in machine learning, optimization methods, computer algorithms, probability and stochastic models, information economics, logistics, strategy, consumer behavior, marketing, and visual analytics.* This is a new CIP code created by NCES and added to its decennial 2020 update to the CIP. The NCES definition of this field of study describes instruction in the STEM disciplines such as research, innovation, or development of new technologies using mathematics and computer science. This CIP code nomination included supporting information on the curricula required for the degree, which demonstrated instruction in STEM disciplines.

Data Visualization (30.7103). *A program that prepares individuals to organize and derive meaning from data by using visual presentation tools and techniques. Includes instruction in cognitive science, computer programming, data management, data visualization theory, graphic design, infographics, perceptual psychology, statistics, and visual design.* This is a new CIP code created by NCES and added to its decennial 2020 update to the CIP. The NCES definition of this field of study describes instruction in the STEM disciplines such as research, innovation, or development of new technologies using mathematics and computer science.

Financial Analytics (30.7104). *A program that focuses on financial big data modeling from algorithms to cloud-based data-driven financial technologies. Includes instruction in financial analytics, financial data processing, knowledge management, data visualization, effective decision communication, machine learning for finance, statistical inference and dynamic modeling on financial data, and project management.* This is a new CIP code created by NCES and added to its decennial 2020 update to the CIP. The NCES definition of this field of study describes instruction in the STEM disciplines such as research, innovation, or development of new technologies using mathematics and computer science.

Data Analytics, Other (30.7199). *Any instructional program in data analytics not listed above.* The NCES definition of this field of study encompasses any related programs not covered by Data Analytics, General; Business Analytics; Data Visualization; and Financial Analytics, which all describe instruction in the STEM disciplines such as research, innovation, or development of new technologies using mathematics and computer science. This is a new CIP code created by NCES and added to its decennial 2020 update to the CIP.

Industrial and Organizational Psychology (42.2804). *A program that focuses on the scientific study of individual and group behavior in institutional settings, applications to related problems of organization and industry, and that may prepare individuals to apply such principles in industrial and organizational settings. Includes instruction in group behavior theory, organizational theory, reward/punishment structures, human-machine and human-computer interactions, motivation dynamics, human stress studies, environmental and organizational influences on behavior, alienation and satisfaction, and job testing and assessment.* The NCES definition of this field of study describes instruction in the STEM disciplines such as research, innovation, or development of new technologies using mathematics. This CIP code nomination included supporting evidence from the Society for Industrial and Organizational Psychology (SIOP) on data-driven research and analysis to address human-centered issues in institutional and organizational settings such as workplace dysfunction and employee engagement. The nomination also included specific examples demonstrating the application of statistical analysis to large data sets as part of an overall curriculum approach and its use in identifying potential solutions to human interface problems that are increasingly predominant in post-industrialized workplaces. These examples include case studies of industrial and organizational psychology methodology specifically applied in the government sphere, including a National Aeronautics and Space Administration grant awarded to a SIOP member to study astronaut health and performance on long-duration missions and the use of industrial and organizational psychology research and data to improve airline safety and assist members of the military in transitioning to civilian life. The examples are indicative of the research inquiry and mathematical applications inherent to this program of study and how they have provided real-world solutions to complex problems.

Social Sciences, Research Methodology and Quantitative Methods (45.0102). *A program that focuses on the design of research studies, measurement of variables, data analysis, and formulation of models. Includes instruction in experimental, quasi-experimental, and case study methods; historical research; participant observation; questionnaire design; sampling theory; and statistical methods.* The NCES definition of this field of study describes instruction in the STEM disciplines such as research, innovation, or development of new technologies using mathematics. This CIP code nomination included a letter of support from the National Academies of Sciences, Medicine, and Engineering and supporting materials from the American Sociological Association.

Paperwork Reduction Act (PRA)

Eligible students are required to submit a Form I–765, ''Application for Employment Authorization,'' to request employment authorization and an

Employment Authorization Document, and a Form I–983, ''Training Plan for STEM OPT Students,'' to ensure that they are receiving the academic and training benefits of the STEM OPT extension. Consistent with the PRA, the Office of Management and Budget (OMB) has previously approved the collection of information contained on the current Form I–765 (OMB Control No. 1615–0040) and Form I–983 (OMB Control No. 1653–0054). Although there could be a slight increase in the number of filings for both the Form I–765 and Form I–983 because of this notice, the number of filings currently contained in the OMB annual inventory is sufficient to cover any additional filings. Accordingly, there is no further action required under the PRA.

Alejandro N. Mayorkas,

Secretary, U.S. Department of Homeland Security.

[FR Doc. 2022–01188 Filed 1–20–22; 8:45 am]

BILLING CODE 9111–28–P

DEPARTMENT OF HOMELAND SECURITY

U.S. Citizenship and Immigration Services

[OMB Control Number 1615–0144]

Agency Information Collection Activities; Revision of a Currently Approved Collection: H–1B Registration Tool

AGENCY: U.S. Citizenship and Immigration Services, Department of Homeland Security.

ACTION: 30-Day notice.

SUMMARY: The Department of Homeland Security (DHS), U.S. Citizenship and Immigration Services (USCIS) will be submitting the following information collection request to the Office of Management and Budget (OMB) for review and clearance in accordance with the Paperwork Reduction Act of 1995. The purpose of this notice is to allow an additional 30 days for public comments.

DATES: Comments are encouraged and will be accepted until February 22, 2022.

ADDRESSES: Written comments and/or suggestions regarding the item(s) contained in this notice, especially regarding the estimated public burden and associated response time, must be submitted via the Federal eRulemaking Portal website at *http://www.regulations.gov* under e-Docket ID number USCIS–2008–0014. All submissions received must include the OMB Control Number 1615–0144 in the body of the letter, the agency name and Docket ID USCIS–2008–0014.

FOR FURTHER INFORMATION CONTACT: USCIS, Office of Policy and Strategy, Regulatory Coordination Division, Samantha Deshommes, Chief, Telephone number (240) 721–3000 (This is not a toll-free number; comments are not accepted via telephone message.). Please note contact information provided here is solely for questions regarding this notice. It is not for individual case status inquiries. Applicants seeking information about the status of their individual cases can check Case Status Online, available at the USCIS website at *http://www.uscis.gov,* or call the USCIS Contact Center at (800) 375–5283; TTY (800) 767–1833.

SUPPLEMENTARY INFORMATION:

Comments

The information collection notice was previously published in the **Federal Register** on September 1, 2021, at 86 FR 49043, allowing for a 60-day public comment period. USCIS received nine comments in connection with the 60-day notice.

The information collection instrument posted with the 60-day **Federal Register** Notice included changes associated with the final rule DHS published on January 8, 2021 at 86 FR 1676 titled, *Modification of Registration Requirement for Petitioners Seeking To File Cap-Subject H–1B Petitions* (RIN 1615–AC61). On Wednesday, December 22, 2021 at 86 FR 72516, DHS published the *Modification of Registration Requirement for Petitioners Seeking To File Cap-Subject H–1B Petitions, Implementation of Vacatur* rule (RIN 1615–AC61). The Paperwork Reduction Act (PRA) submission associated with the vacatur rule removed the changes that would have been made by the January 2021 final rule if it had taken effect. Accordingly, USCIS has also removed those changes from the information collection instrument posted with this 30-day **Federal Register** Notice and adjusted the burden submission accordingly.

You may access the information collection instrument with instructions, or additional information by visiting the Federal eRulemaking Portal site at: *http://www.regulations.gov* and enter USCIS–2008–0014 in the search box. The comments submitted to USCIS via this method are visible to the Office of Management and Budget and comply with the requirements of 5 CFR 1320.12(c). All submissions will be posted, without change, to the Federal eRulemaking Portal at *http://www.regulations.gov,* and will include any personal information you provide. Therefore, submitting this information makes it public. You may wish to consider limiting the amount of personal information that you provide in any voluntary submission you make to DHS. DHS may withhold information provided in comments from public viewing that it determines may impact the privacy of an individual or is offensive. For additional information, please read the Privacy Act notice that is available via the link in the footer of *http://www.regulations.gov.*

Written comments and suggestions from the public and affected agencies should address one or more of the following four points:

(1) Evaluate whether the proposed collection of information is necessary for the proper performance of the functions of the agency, including whether the information will have practical utility;

(2) Evaluate the accuracy of the agency's estimate of the burden of the proposed collection of information, including the validity of the methodology and assumptions used;

(3) Enhance the quality, utility, and clarity of the information to be collected; and

(4) Minimize the burden of the collection of information on those who are to respond, including through the use of appropriate automated, electronic, mechanical, or other technological collection techniques or other forms of information technology, *e.g.,* permitting electronic submission of responses.

Overview of This Information Collection

(1) *Type of Information Collection Request:* Revision of a Currently Approved Collection.

(2) *Title of the Form/Collection:* H–1B Registration Tool.

(3) *Agency form number, if any, and the applicable component of the DHS sponsoring the collection:* OMB–64; USCIS.

(4) *Affected public who will be asked or required to respond, as well as a brief abstract: Primary:* Business or other for-profit. USCIS will use the data collected through the H–1B Registration Tool to select a sufficient number of registrations projected to meet the applicable H–1B cap allocations and to notify registrants whether their registration was selected.

(5) *An estimate of the total number of respondents and the amount of time estimated for an average respondent to respond:* The estimated total number of

business or other for-profit respondents for the information collection H–1B Registration Tool is 35,500 with an estimated 3 responses per respondents and an estimated hour burden per response of 0.5167 hours. The estimated total number of attorney respondents for the information collection H–1B Registration Tool is 4,500 with an estimated 38 responses per respondents and an estimated hour burden per response of 0.5167 hours.

(6) *An estimate of the total public burden (in hours) associated with the collection:* The total estimated annual hour burden associated with this collection is 143,384 hours.

(7) *An estimate of the total public burden (in cost) associated with the collection:* The estimated total annual cost burden associated with this collection of information is $0. Any costs to respondents are captured in the Form I–129 information collection (OMB control number 1615–009).

Dated: January 14, 2022.

Samantha L Deshommes,

Chief, Regulatory Coordination Division, Office of Policy and Strategy, U.S. Citizenship and Immigration Services, Department of Homeland Security.

[FR Doc. 2022–01107 Filed 1–20–22; 8:45 am]

BILLING CODE 9111–97–P

DEPARTMENT OF HOUSING AND URBAN DEVELOPMENT

[Docket No. FR–7050–N–01]

30-Day Notice of Proposed Information Collection: Section 3 Sample Certification Forms; OMB Control No: 2501–New

AGENCY: Office of Policy Development and Research, Chief Data Officer, Housing and Urban Development (HUD).

ACTION: Notice.

SUMMARY: HUD is seeking approval from the Office of Management and Budget (OMB) for the information collection described below. In accordance with the Paperwork Reduction Act, HUD is requesting comment from all interested parties on the proposed collection of information. The purpose of this notice is to allow for 30 days of public comment.

DATES: *Comments Due Date:* February 22, 2022.

ADDRESSES: Interested persons are invited to submit comments regarding this proposal. Written comments and recommendations for the proposed information collection should be sent within 30 days of publication of this notice to *OIRA_submission@omb.eop.gov* or *www.reginfo.gov/public/do/PRAMain.* Find this particular information collection by selecting ''Currently under 30-day Review—Open for Public Comments'' or by using the search function.

FOR FURTHER INFORMATION CONTACT: Anna P. Guido, Reports Management Officer, QMAC, Department of Housing and Urban Development, 451 7th Street SW, Washington, DC 20410; email her at *Anna.P.Guido@hud.gov* or telephone 202–402–5535. This is not a toll-free number. Copies of available documents submitted to OMB may be obtained from Ms. Guido.

SUPPLEMENTARY INFORMATION: This notice informs the public that HUD is seeking approval from OMB for the information collection described in Section A.

The **Federal Register** notice that solicited public comment on the information collection for a period of 60 days was published on August 23, 2021 at 86 FR 47135.

A. Overview of Information Collection

Title of Information Collection: Section 3 Sample Certification Forms.

OMB Approval Number: 2501–New.

Type of Request: New.

Form Number: HUD Forms 4736, 4736A, 4736B, 4736C, 4736D.

Description of the need for the information and proposed use: This collection is to reflect changes to the Section 3 regulation, published in the **Federal Register** 9/29/2020 (*https://www.federalregister.gov/documents/2020/09/29/2020-19185/enhancing-and-streamlining-the-implementation-of-section-3-requirements-for-creating-economic*). The rule at 24 CFR part 75 is effective November 30th, 2020 and replaces the regulations found at 24 CFR part 135.

24 CFR 75.31 provides a number of options for certification that individuals meet the new definitions in the new final rule:

(1) For a worker to qualify as a Section 3 worker, one of the following must be maintained:

(i) A worker's self-certification that their income is below the income limit from the prior calendar year;

(ii) A worker's self-certification of participation in a means-tested program such as public housing or Section 8-assisted housing;

(iii) Certification from a PHA, or the owner or property manager of project-based Section 8-assisted housing, or the administrator of tenant-based Section 8-assisted housing that the worker is a participant in one of their programs;

(iv) An employer's certification that the worker's income from that employer is below the income limit when based on an employer's calculation of what the worker's wage rate would translate to if annualized on a full-time basis; or

(v) An employer's certification that the worker is employed by a Section 3 business concern.

(2) For a worker to qualify as a Targeted Section 3 worker, one of the following must be maintained:

(i) For a worker to qualify as a Targeted Section 3 worker for public housing financial assistance:

(A) A worker's self-certification of participation in public housing or Section 8-assisted housing programs;

(B) Certification from a PHA, or the owner or property manager of project-based Section 8-assisted housing, or the administrator of tenant-based Section 8-assisted housing that the worker is a participant in one of their programs;

(C) An employer's certification that the worker is employed by a Section 3 business concern; or

(D) A worker's certification that the worker is a YouthBuild participant.

(ii) For a worker to qualify as a Targeted Section 3 worker for a section 3 project (housing and community development financial assistance):

(A) An employer's confirmation that a worker's residence is within one mile of the work site or, if fewer than 5,000 people live within one mile of a work site, within a circle centered on the work site that is sufficient to encompass a population of 5,000 people according to the most recent U.S. Census;

(B) An employer's certification that the worker is employed by a Section 3 business concern; or

(C) A worker's self-certification that the worker is a YouthBuild participant.

These forms are designed to assist grant recipients and contractors with their recordkeeping requirements found in the regulation.

Information collection	Number of respondents	Frequency of response	Responses per annum	Burden hour per response	Total burden hours	Hourly per response	Annual cost
HUD Form 4736—*PH/Section 8 Certification Form*	150	1	150	0.5	75	$49.83	$3,737.25
HUD Form 4736A—*Employer HCD Certification*	500	1	500	0.5	250	45.80	11,450.00

Information collection	Number of respondents	Frequency of response	Responses per annum	Burden hour per response	Total burden hours	Hourly per response	Annual cost
HUD Form 4736B—*Employer Certification PHA*	500	1	500	0.5	250	45.80	11,450.00
HUD Form 4736C—*Employee Self Certification HCD*	500	1	500	0.5	250	7.25	1,812.50
HUD Form 4736D—*Employee Self-Certification PHA*	500	1	500	0.5	250	7.25	1,812.50
Total	2,150.00		2,150.00	2.5	1,075.00		30,262.05

B. Solicitation of Public Comment

This notice is soliciting comments from members of the public and affected parties concerning the collection of information described in Section A on the following:

(1) Whether the proposed collection of information is necessary for the proper performance of the functions of the agency, including whether the information will have practical utility;

(2) If the information will be processed and used in a timely manner;

(3) The accuracy of the agency's estimate of the burden of the proposed collection of information;

(4) Ways to enhance the quality, utility, and clarity of the information to be collected; and

(5) Ways to minimize the burden of the collection of information on those who are to respond; including through the use of appropriate automated collection techniques or other forms of information technology, *e.g.,* permitting electronic submission of responses.

HUD encourages interested parties to submit comment in response to these questions.

C. Authority

Section 3507 of the Paperwork Reduction Act of 1995, 44 U.S.C. Chapter 35.

Anna P. Guido,

Department Reports Management Officer, Office of the Chief Information Officer.

[FR Doc. 2022–01181 Filed 1–20–22; 8:45 am]

BILLING CODE 4210–67–P

DEPARTMENT OF HOUSING AND URBAN DEVELOPMENT

[Docket No. FR–7050–N–03]

30-Day Notice of Proposed Information Collection: Eviction Protection Grant Program; OMB Control No: 2528–0331

AGENCY: Office of Policy Development and Research, Chief Data Officer, HUD.

ACTION: Notice.

SUMMARY: HUD is seeking approval from the Office of Management and Budget (OMB) for the information collection described below. In accordance with the Paperwork Reduction Act, HUD is requesting comment from all interested parties on the proposed collection of information. The purpose of this notice is to allow for 30 days of public comment.

DATES: *Comments Due Date:* February 22, 2022.

ADDRESSES: Interested persons are invited to submit comments regarding this proposal. Written comments and recommendations for the proposed information collection should be sent within 30 days of publication of this notice to *OIRA_submission@omb.eop.gov* or *www.reginfo.gov/public/do/PRAMain.* Find this particular information collection by selecting ''Currently under 30-day Review—Open for Public Comments'' or by using the search function.

FOR FURTHER INFORMATION CONTACT: Anna P. Guido, Reports Management Officer, QMAC, Department of Housing and Urban Development, 451 7th Street SW, Washington, DC 20410; email her at *Anna.P.Guido@hud.gov* or telephone 202–402–5535. This is not a toll-free number. Copies of available documents submitted to OMB may be obtained from Ms. Guido.

SUPPLEMENTARY INFORMATION: This notice informs the public that HUD is seeking approval from OMB for the information collection described in Section A.

The **Federal Register** notice that solicited public comment on the information collection for a period of 60 days was published on October 27, 2021 at 86 FR 59412.

A. Overview of Information Collection

Title of Information Collection: Eviction Protection Grant Program.

OMB Approval Number: 2528–0331.

Type of Request: Revision of a currently approved collection.

Form Number: Application for Federal Assistance, Standard Form–424; Disclosure of Lobbying Activities, Standard Form–LLL; HUD Detailed Budget Worksheet, 424 CBW; HUD Applicant/Recipient Disclosure/Update Report, 2880; NOFO narrative; HUD Client Services and Outcomes Report, 52698; and grant activity report.

Description of the need for the information and proposed use: This information is collected in connection with HUD's Eviction Protection Grant Program and will be used by HUD to determine that the grant applicant meets the requirements of the Notice of Funding Opportunity (NOFO). Information collected is also used to assign points for awarding grant funds on a competitive and equitable basis. The information is collected via a narrative and the budget form. Information collected from grantees post-award will be used by HUD to meet its statutory program monitoring and demonstration obligations.

HUD is required to develop a competitive grant program to fund nonprofit or governmental entities to provide legal assistance (including assistance related to pretrial activities, trial activities, post-trial activities and alternative dispute resolution) at no cost to eligible low-income tenants at risk of or subject to eviction. In connection with the COVID–19 emergency, the CARES Act was enacted on March 28, 2020. It placed a moratorium on eviction in all federally-assisted housing and federally-backed mortgages through July 24, 2020. The expiration of that moratorium was followed by an Order from the Centers of Disease Control and Prevention (CDC) temporarily halting evictions for nonpayment of rent on September 4, 2020, which was subsequently extended until July 31, 2021, nationally and until October 3, 2021, in areas with substantial or high levels of community transmission of COVID–19.

As households continue to struggle with income loss and accumulating back rent, the threat of evictions has grown considerably. The Household Pulse Survey Phase 3.1 found that the week of June 23, 2021, over 7.4 million renters were behind on their rent payments and another 4.9 million were not confident they would be able to make next month's payment. With the expiration of the CDC's national moratorium looming, 3.6 million renters reported eviction was likely or somewhat likely in the next two months. Housing instability caused by formal and informal evictions has significant economic, physical, and mental consequences. Research has found eviction protection services, including services such as legal representation, court navigators, education and outreach, and assistance

completing the legal forms to respond to an eviction notice, reduce evictions and increase housing stability for low-income renters. The Eviction Protection Grant Program will provide $20 million to support eviction protection services in areas with high rates of eviction or probable eviction to low-income tenants at risk of or subject to eviction. The Eviction Protection Grant Program NOFO, FR–6500–N–79.

This notice updates HUD's previously approved emergency review request to include HUD's proposed form for collecting information about client services and outcomes. Grantees will be expected to submit this information to HUD with its post-award quarterly reports. This review is needed to fulfill Congress' intent for the Eviction Protection grant program to expeditiously provide funds to meet the need for which Congress appropriated them, reduce the harm these tenants will face without access to eviction protection services, and enable HUD to meet its statutory program monitoring and demonstration obligations for this new program.

Information collection	Number of respondents	Frequency of response	Responses per year	Average burden hours per response	Annual burden hours	Hourly cost per response	Annual cost
Pre award							
NOFO application narrative	100	1	100	40	4,000	$52.36	$209,440
Application for Federal Assistance (SF–424)	0	0	0	0	0	0.00	0.00
Disclosure of Lobbying Activities (SF–LLL)	0	0	0	0	0	0.00	0.00
Detailed Budget Worksheet, 424 CBW	100	1	100	3.12	312	52.36	16,336.32
Disclosure/Update Report (Form HUD–2880)	100	1	100	2	200	52.36	10,472
Total Pre award	100	1	100	45.12	4,512	52.36	236,248.32
Post award							
Grant work plan	20	1	20	2	40	52.36	2,094.40
Detailed Budget Worksheet, 424 CBW	20	1	20	3.12	62.4	52.36	3,267.26
Client Services and Outcomes Report, 52698	20	*1,000	20,000	0.25	5,000	52.36	261,800.00
Grant reporting	20	4	80	2	160	52.36	8,377.60
Total Post award	20	5	120	7.37	5,262.4	52.36	275,539.26
Totals	100	6	220	52.49	9,774.40	52.36	511,787.58

B. Solicitation of Public Comment

This notice is soliciting comments from members of the public and affected parties concerning the collection of information described in Section A on the following:

(1) Whether the proposed collection of information is necessary for the proper performance of the functions of the agency, including whether the information will have practical utility;

(2) If the information will be processed and used in a timely manner;

(3) The accuracy of the agency's estimate of the burden of the proposed collection of information;

(4) Ways to enhance the quality, utility, and clarity of the information to be collected; and

(5) Ways to minimize the burden of the collection of information on those who are to respond; including through the use of appropriate automated collection techniques or other forms of information technology, *e.g.,* permitting electronic submission of responses. HUD encourages interested parties to submit comment in response to these questions.

C. Authority

Section 3507 of the Paperwork Reduction Act of 1995, 44 U.S.C. Chapter 35.

Anna P. Guido,

Department Reports Management Officer, Office of the Chief Information Officer.

[FR Doc. 2022–01177 Filed 1–20–22; 8:45 am]

BILLING CODE 4210–67–P

DEPARTMENT OF HOUSING AND URBAN DEVELOPMENT

[Docket No. FR–7058–N–01]

60-Day Notice of Proposed Information Collection: Medical Exception or Delay to COVID Vaccination Requirement; OMB Control No.: 2501–0037

AGENCY: Office of the Chief Human Capital Officer, HUD.

ACTION: Notice.

SUMMARY: HUD is seeking approval from the Office of Management and Budget (OMB) for the information collection described below. In accordance with the Paperwork Reduction Act, HUD is requesting comment from all interested parties on the proposed collection of information. The purpose of this notice is to allow for 60 days of public comment.

DATES: *Comments Due Date:* March 22, 2022.

ADDRESSES: Interested persons are invited to submit comments regarding this proposal. Comments should refer to the proposal by name and/or OMB Control Number and should be sent to: Anna Guido, Management Analyst, QDAM, Department of Housing and Urban Development, 451 7th Street SW, Room 4176, Washington, DC 20410–5000; telephone 202–402–5535 (this is not a toll-free number) or email at *anna.p.guido@hud.gov* for a copy of the proposed forms or other available information. Persons with hearing or speech impairments may access this number through TTY by calling the toll-free Federal Relay Service at (800) 877–8339.

FOR FURTHER INFORMATION CONTACT: Anna Guido, Department of Housing and Urban Development, 451 7th Street SW, Room 4176, Washington, DC 20410; telephone 202–402–5535, (this is not a toll-free number). Persons with hearing or speech impairments may access this number via TTY by calling the Federal Relay Service at (800) 877–8339. Copies of available documents submitted to OMB may be obtained from Anna Guido.

SUPPLEMENTARY INFORMATION: This notice informs the public that HUD is

seeking approval from OMB for the information collection described in Section A.

A. Overview of Information Collection

Title of Information Collection: Medical Exception or Delay to COVID Vaccination Requirement.

OMB Approval Number: OMB No. 2501–0037.

Type of Request: Extension of a currently approved collection.

Form Number: Form HUD–1001.

Description of the need for the information and proposed use: The Office of the Chief Human Capital Officer at the U.S. Department of Housing and Urban Development (HUD) is seeking approval to collect information from employees regarding requests for medical exceptions in accordance with the following authorities:

The Rehabilitation Act, 29 U.S.C. 791, and Title VII of the Civil Rights Act, 42 U.S.C. 2000e, as well as Executive Orders 13164 and 14043, and 29 CFR 1605 and 1614.

Collection of information regarding medical exceptions will enable the agency to render well-informed decisions in accordance with the federal authorities. Exceptions will be granted in limited circumstances and only where legally required.

Information collection	Number of respondents	Frequency of response	Responses per annum	Burden hour per response	Annual burden hours	Hourly cost per response	Annual cost
Disability Exemption Request COVID–19 ..	200	1	200	1.5	300	$49.68	$14,904

GS–13, Step 1.

B. Solicitation of Public Comment

This notice is soliciting comments from members of the public and affected parties concerning the collection of information described in Section A on the following:

(1) Whether the proposed collection of information is necessary for the proper performance of the functions of the agency, including whether the information will have practical utility;

(2) The accuracy of the agency's estimate of the burden of the proposed collection of information;

(3) Ways to enhance the quality, utility, and clarity of the information to be collected; and

(4) Ways to minimize the burden of the collection of information on those who are to respond; including through the use of appropriate automated collection techniques or other forms of information technology, *e.g.,* permitting electronic submission of responses.

HUD encourages interested parties to submit comment in response to these questions.

C. Authority

Section 3507 of the Paperwork Reduction Act of 1995, 44 U.S.C. Chapter 35.

Lori A. Michalski,

Chief Human Capital Officer.

[FR Doc. 2022–01137 Filed 1–20–22; 8:45 am]

BILLING CODE 4210–67–P

DEPARTMENT OF HOUSING AND URBAN DEVELOPMENT

[Docket No. FR–7050–N–02]

30-Day Notice of Proposed Information Collection: Section 3 Sample Utilization Plans; OMB Control No: 2501–New

AGENCY: Office of Policy Development and Research, Chief Data Officer, HUD.

ACTION: Notice.

SUMMARY: HUD is seeking approval from the Office of Management and Budget (OMB) for the information collection described below. In accordance with the Paperwork Reduction Act, HUD is requesting comment from all interested parties on the proposed collection of information. The purpose of this notice is to allow for 30 days of public comment.

DATES: *Comments Due Date:* February 22, 2022.

ADDRESSES: Interested persons are invited to submit comments regarding this proposal. Written comments and recommendations for the proposed information collection should be sent within 30 days of publication of this notice to *OIRA_submission@omb.eop.gov* or *www.reginfo.gov/public/do/PRAMain.* Find this particular information collection by selecting ''Currently under 30-day Review—Open for Public Comments'' or by using the search function.

FOR FURTHER INFORMATION CONTACT: Anna P. Guido, Reports Management Officer, QMAC, Department of Housing and Urban Development, 451 7th Street SW, Washington, DC 20410; email her at *Anna.P.Guido@hud.gov* or telephone 202–402–5535. This is not a toll-free number. Copies of available documents submitted to OMB may be obtained from Ms. Guido.

SUPPLEMENTARY INFORMATION: This notice informs the public that HUD is seeking approval from OMB for the information collection described in Section A.

The **Federal Register** notice that solicited public comment on the information collection for a period of 60 days was published on August 23, 2021 at 86 FR 47136.

A. Overview of Information Collection

Title of Information Collection: Section 3 Sample Utilization Plans.

OMB Approval Number: 2501–New.

Type of Request: New.

Form Number: HUD Forms 4737, 4737A, 4737B, 4737C, 4737D.

Description of the need for the information and proposed use: This collection is to document the Section 3 labor hours for Section 3 workers and Section 3 Business concerns for employment and economic opportunities generated by public housing financial assistance and section 3 projects as well as the HUD funding/grants generating the opportunities. This collection is reflective of the changes to the Section 3 regulation, published in the **Federal Register** 9/29/2020. Grantees of HUD financial assistance can use this as a sample tool to document their Section 3 labor hours. This collection is not a requirement but is to be used as a sample if grantees do not already have a process in place to document Section 3 labor hours.

Information collection	Number of respondents	Frequency of response	Responses per annum	Burden hour per response	Total burden hours	Hourly per response	Annual cost
HUD Form 4737 *Section 3 Utilization Tracker: Business Labor Hours*	2,500.00	1.00	2,500.00	5.00	12,500.00	$42.01	$525,125.00
HUD Form 4737A *Section 3 Utilization Tracker: Section 3 Labor Hours*	2,500.00	1.00	2,500.00	5.00	12.500.00	42.01	525,125.00
HUD Form 4737B *Section 3 Sample Utilization Tool: PHA Financial Assistance*	2,500.00	1.00	2,500.00	1.50	3,750.00	49.83	186,862.50
HUD Form 4737C *HUD Section 3 Sample Utilization Tool: Section 3 Projects with HCD Funding*	2,500.00	1.00	2,500.00	1.50	3,750.00	34.18	128,175.00
HUD Form 4737D *HUD Funding Tracker for Section 3*	2,500.00	1.00	2,500.00	3.00	7,500.00	42.01	315,075.00
Total	12,500.00			16.00	40,000.00		1,680,362.50

B. Solicitation of Public Comment

This notice is soliciting comments from members of the public and affected parties concerning the collection of information described in Section A on the following:

(1) Whether the proposed collection of information is necessary for the proper performance of the functions of the agency, including whether the information will have practical utility;

(2) If the information will be processed and used in a timely manner;

(3) The accuracy of the agency's estimate of the burden of the proposed collection of information;

(4) Ways to enhance the quality, utility, and clarity of the information to be collected; and

(5) Ways to minimize the burden of the collection of information on those who are to respond; including through the use of appropriate automated collection techniques or other forms of information technology, *e.g.,* permitting electronic submission of responses.

HUD encourages interested parties to submit comment in response to these questions.

C. Authority

Section 3507 of the Paperwork Reduction Act of 1995, 44 U.S.C. Chapter 35.

Anna P. Guido,

Department Reports Management Officer, Office of the Chief Information Officer.

[FR Doc. 2022–01176 Filed 1–20–22; 8:45 am]

BILLING CODE 4210–67–P

DEPARTMENT OF THE INTERIOR

Fish and Wildlife Service

[Docket No. FWS–R8–ES–2021–0120; FXES11130800000–212–FF08ENVS00]

Habitat Conservation Plan for Warm Springs Natural Area and Hidden Valley Property, Clark County, Nevada; Receipt of Incidental Take Permit Application, Draft Low-Effect Habitat Conservation Plan, and Draft Environmental Compliance Documentation

AGENCY: Fish and Wildlife Service, Interior.

ACTION: Notice of availability; request for comment.

SUMMARY: We, the U.S. Fish and Wildlife Service (Service), announce the receipt and availability of an application for an incidental take permit (ITP) under the Endangered Species Act (ESA) and an associated draft low-effect habitat conservation plan (HCP). Additionally, consistent with the requirements of the National Environmental Policy Act (NEPA), we have prepared a draft low-effect screening form and environmental action statement supporting our preliminary determination that the proposed permit action qualifies for a categorical exclusion under NEPA. The Southern Nevada Water Authority has applied for an ITP under the ESA for the HCP for Warm Springs Natural Area and Hidden Valley Property in Clark County, Nevada. The ITP would authorize the take of seven species incidental to the development, construction and operation of the project. We invite the public and local, State, Tribal, and Federal agencies to comment on the permit application, proposed low-effect HCP, and NEPA categorical exclusion determination documentation. Before issuing the requested ITP, we will take into consideration any information that we receive during the public comment period.

DATES: Written comments must be received on or before February 22, 2022.

ADDRESSES:

Obtaining Documents: The documents announced by this notice, as well as any comments and other materials that we receive, will be available for public inspection in Docket No. FWS–R8–ES–2021–0120 at *https://www.regulations.gov.*

Submitting Comments: To send written comments, please use one of the following methods and identify to which document your comments are in reference—the draft HCP or NEPA compliance documentation.

- *Internet:* Submit comments at *https://www.regulations.gov* under Docket No. FWS–R8–ES–2021–0120.
- *U.S. Mail:* Public Comments Processing, Attn: Docket No. FWS–R8–ES–2021–0120; U.S. Fish and Wildlife Service Headquarters, MS: PRB/3W; 5275 Leesburg Pike; Falls Church, VA 22041–3803.

For more information, see Public Comments and Public Availability of Comments under **SUPPLEMENTARY INFORMATION**.

FOR FURTHER INFORMATION CONTACT: Glen W. Knowles, Field Supervisor, Southern Nevada Fish and Wildlife Office, by phone at 702–515–5244 or via the Federal Relay Service at 800–877–8339.

SUPPLEMENTARY INFORMATION: We, the Service, announce the receipt of a permit application from the Southern Nevada Water Authority (applicant), for a 15-year ITP under section 10(a)(1)(B) of the ESA, as amended (16 U.S.C. 1531 *et seq.*). Application for the permit requires the preparation of an HCP with measures to avoid, minimize, and mitigate the impacts of incidental take of endangered, threatened, or candidate species to the maximum extent practicable. The applicant prepared the draft low-effect HCP for Warm Springs Natural Area and Hidden Valley Property pursuant to section 10(a)(1)(B) of the ESA.

The Service's consideration of issuing an ITP also requires evaluation of its potential impacts on the natural and

human environment in accordance with NEPA (42 U.S.C. 4321 *et seq.*). The Service has prepared a low-effect screening form and environmental action statement (categorical exclusion, or CatEx documentation), pursuant to NEPA and its implementing regulations in the Code of Federal Regulations (CFR) at 40 CFR 1501.4, to preliminarily determine if the proposed HCP qualifies as a low-effect HCP, eligible for a categorical exclusion.

Background

Except for permitted exceptions, section 9 of the ESA (16 U.S.C. 1538 *et seq.*) prohibits the taking of fish and wildlife species listed as endangered under section 4 of the ESA; by regulation, take of certain species listed as threatened is also prohibited (16 U.S.C. 1533(d); 50 CFR 17.31). Regulations governing the permitted exception for allowable incidental take of endangered and threatened species are at 50 CFR 17.22 and 17.32. For more about the Federal habitat conservation HCP program, go to: *https://www.fws.gov/endangered/esa-library/pdf/hcp.pdf.*

National Environmental Policy Act Compliance

The proposed permit issuance triggers the need for compliance with the NEPA. The draft CatEx documentation was prepared to determine if issuance of an ITP, based on the draft HCP, would only have individually or cumulatively minor or negligible effects on the species covered in the HCP, as well as on other environmental values or resources, and would therefore qualify as a low-effect HCP not subject to further environmental analysis under NEPA.

Proposed Action

Under the proposed action, the Service would issue a permit to the applicant for a period of 15 years for covered activities (described below) related to the management and restoration of the Warm Springs Natural Area (WSNA) and the Hidden Valley Property (HVP). Covered species include the federally endangered Moapa dace (*Moapa coriacea*), federally endangered Yuma Ridgway's rail (*Rallus obsoletus yumanensis*), federally endangered southwestern willow flycatcher (*Empidonax traillii extimus*), federally threatened yellow-billed cuckoo (*Coccyzus americanus*), a candidate for listing under the ESA, the monarch butterfly (*Danaus plexippus*), and two unlisted species, the Moapa White River springfish (*Crenichthys baileyi moapae*) and the Virgin River chub (*Gila seminuda*).

Habitat Conservation Plan Area

The geographic scope of this draft HCP area encompasses 7.2 stream miles (6.1 miles at WSNA and 1.1 miles at HVP) and 1,401 acres (1,250 at WSNA and 151 at HVP) Clark County, Nevada.

Covered Activities

The proposed section 10(a) permit would allow incidental take of four covered species, one candidate for listing, from covered activities in the proposed HCP area. Two unlisted species would also be identified and addressed in the permit should they ever become listed. The applicant is requesting incidental take authorization for covered activities pertaining to the management and restoration of the WSNA and HVP, including but not limited to reconnection of channels, streams, and tributaries, bank and channel stabilization, beaver management, fish passage improvements, invasive aquatic species management, invasive plant management, clearing vegetation from streams, installation of Moapa dace habitat structures, Moapa dace snorkel surveys, fire and fuels management, pumping water for irrigation, dust control and fire suppression, operation of vehicles and maintenance equipment, general public access, property tours, field trips and school groups, neighbor outreach, volunteer planting events, and research. The applicant has also proposed spring pool restoration and enhancement, construction and enhancement of wetlands, restoration and enhancement of riparian habitat, and restoration and enhancement of mesquite and upland habitat. For each of the covered activities, the applicant has outlined best management practices in the HCP to minimize and mitigate for direct impacts to covered species. The proposed actions will result in temporary loss of habitat at the WSNA and HVP in Clark County, Nevada.

Public Comments

We request data, comments, new information, or suggestions from the public, other concerned governmental agencies, the scientific community, Tribes, industry, or any other interested party on the draft HCP and associated documents. If you wish to comment, you may submit comments by either of the methods in **ADDRESSES**.

Public Availability of Comments

Any comments we receive will become part of the decision record associated with this action. Before including your address, phone number, email address, or other personal identifying information in your comment, you should be aware that your entire comment—including your personal identifying information—may be made publicly available at any time. While you can request in your comment that we withhold your personal identifying information from public review, we cannot guarantee that we will be able to do so. All submissions from organizations or businesses, and from individuals identifying themselves as representatives or officials of organizations or businesses, will be made available for public disclosure in their entirety.

Next Steps

Issuance of a permit is a Federal proposed action subject to compliance with NEPA and section 7 of the ESA. We will evaluate the permit application, the HCP, associated documents, and any public comments we receive during the comment period to determine whether the application meets the requirements of section 10(a) of the ESA. If we determine that those requirements are met, we will conduct an intra-Service consultation under section 7 of the ESA for the Federal action and for the potential issuance of an ITP. If the intra-Service consultation confirms that issuance of the permit will not jeopardize the continued existence of any endangered or threatened species, or destroy or adversely modify critical habitat, we will issue a permit to the applicant for the incidental take of the covered species.

Authority

We provide this notice under section 10(c) of the ESA (16 U.S.C. 1539(c) and its implementing regulations (50 CFR 17.32) and NEPA (42 U.S.C. 4371 *et seq.*) and NEPA implementing regulations (40 CFR 1501.4).

Glen W. Knowles,

Field Supervisor, Southern Nevada Fish and Wildlife Office, U.S. Fish and Wildlife Service, Las Vegas, Nevada.

[FR Doc. 2022–01145 Filed 1–20–22; 8:45 am]

BILLING CODE 4333–15–P

DEPARTMENT OF THE INTERIOR

Bureau of Land Management

[LLESJ02400–L16100000–DU0000–223L1109AF]

Notice of Intent To Amend the 1995 Florida Resource Management Plan and To Prepare an Associated Environmental Assessment

AGENCY: Bureau of Land Management, Interior.

ACTION: Notice of intent.

SUMMARY: In compliance with the National Environmental Policy Act of 1969 as amended (NEPA) and the Federal Land Policy and Management Act of 1976, as amended (FLPMA), the Bureau of Land Management (BLM) Southeastern States District Office, Flowood, Mississippi, intends to prepare a Resource Management Plan (RMP) Amendment to the 1995 Florida Approved RMP, with an associated Environmental Assessment (EA), to evaluate proposed future management guidance for the Jupiter Inlet Lighthouse Outstanding Natural Area (ONA). This notice announces the beginning of the scoping process to solicit public comments and identify potential issues for consideration in the EA. This notice also announces the beginning of the 30-day review of the proposed planning criteria the BLM would use in the analysis of the RMP Amendment, and calls for nominations for new proposals or modifications to the existing area of critical environmental concern (ACEC) within the Jupiter Inlet Lighthouse ONA.

DATES: Comments must be submitted in writing by February 22, 2022. The BLM will announce date(s), time(s), and detail(s) of any scoping meetings at least 15 days in advance through local news media, newspapers, social media channels, and the BLM website at: *www.blm.gov/JupiterONA.* The BLM must receive all comments prior to the close of the 30-day scoping period in order to include them in the analysis. We will provide additional opportunities for public participation as appropriate.

ADDRESSES: You may submit comments on issues and planning criteria related to the Florida RMP Amendment EA by any of the following methods:

- *Florida RMP Amendment ePlanning website: https://eplanning.blm.gov/eplanning-ui/project/2002316/510;*
- *Mail:* Program Manager, Jupiter Inlet Lighthouse ONA, Bureau of Land Management, 600 State Road 707, Unit B, Jupiter, Florida 33469; or
- *Email: BLM_ES_JupiterONA@blm.gov.*

Documents pertinent to this proposal may be examined online on the BLM ePlanning website provided above. The ePlanning site can also be accessed via links provided on the ONA official website here: *www.blm.gov/JupiterONA.*

FOR FURTHER INFORMATION CONTACT: Peter DeWitt, Program Manager; telephone: (561) 295–5955; email: *BLM_ES_JupiterONA@blm.gov.* Persons who use a telecommunications device for the deaf (TDD) may call the Federal Relay Service (FRS) at 1–800–877–8339 to contact Mr. DeWitt during normal business hours. The FRS is available 24 hours a day, 7 days a week, to leave a message. You will receive a reply during normal business hours.

SUPPLEMENTARY INFORMATION: The ONA was designated by Congress in 2008. It is a protected land area designation within the National Landscape Conservation System. This document provides notice that the BLM Southeastern States District intends to prepare an EA and RMP Amendment to the 1995 Florida RMP, exclusive to the ONA. The planning area is in Palm Beach County, Florida, and encompasses approximately 126 acres of both Federal and non-Federal surface lands that make up the ONA. The BLM, as directed by the Consolidated Natural Resources Act of 2008 (CNRA), manages the ONA in coordination with local partners to protect, preserve, and enhance the unique and nationally important historical, natural, cultural, scientific, educational, scenic, and recreational values at the ONA, with an emphasis on restoring native ecological systems. The proposed amendment will identify land management decisions for lands acquired within the planning area that currently have no land-use planning level decisions, evaluate land-use planning level decisions for recreation management, consider the availability of all or portions of the planning area for certain land-use authorizations, and evaluate the Jupiter Inlet tract ACEC decisions to address the need for the designation within the ONA.

The 54-acre ACEC was designated by the 1995 Florida RMP as relevant and important for wildlife and cultural resources. An ACEC Evaluation Report published in Volume 3 of the draft Southeastern States RMP/EIS on October 24, 2016, determined that the ACEC and an 83-acre expanded nomination area continue to meet the relevance and importance criteria. No further areas or configurations for ACECs applicable to the planning area have been identified from previous planning efforts or from pre-planning activities on the current land-use plan amendment effort. Both the existing ACEC and the expanded nomination area are wholly within the ONA boundaries.U.S.C

BLM identified preliminary issues for planning, which include: (1) Absence of land-use planning level guidance for the recreation and visitor services program; (2) necessity of, or lack thereof, special management for the existing ACEC or the expanded nomination area; and (3) availability of all or a portion of the ONA for issuing certain land-use authorizations. Public scoping is intended to determine relevant issues that will influence the scope of the EA, formulate alternatives, and guide the planning process.

Preliminary planning criteria include: (1) Comply with FLPMA, CNRA, and all other laws, regulations, and policies; (2) recognize valid existing rights and allow for appropriate partner uses consistent with applicable laws; (3) establish new land-use planning level guidance and identify existing guidance for managing the ONA; (4) strive to protect, conserve, and enhance the unique and nationally important values at the ONA with an emphasis on conservation; (5) provide the framework for accommodating visitors for a range of educational, interpretive, and passive recreational experiences while ensuring that the ONA is preserved; (6) remain fiscally responsible with reasonable and achievable management decisions; and (7) provide for safe facilities, infrastructure, and grounds that are compatible with achieving the resource objectives for the ONA.

You may submit comments on issues, planning criteria, the ACEC and its expanded nomination area, or new ACEC nominations in writing to the BLM at any public scoping meeting, or you may submit them to the BLM using one of the methods listed in the **ADDRESSES** section earlier. Comments must be submitted by the date identified in the **DATES** section earlier for consideration during the NEPA and land-use planning process. In accordance with FLPMA, the BLM will use and coordinate the NEPA scoping process to fulfill the public involvement process and compliance under Section 106 of the National Historic Preservation Act (NHPA) (16 U.S.C. 470(f)), pursuant to 36 CFR 800.2(d)(3). Information about historic and cultural resources within the area potentially affected by the proposed action will assist the BLM in identifying and evaluating impacts to such resources in

the context of both NEPA and Section 106 of the NHPA.

The BLM will consult with Native American Tribes on a government-to-government basis in accordance with Executive Order 13175 and other policies. Tribal concerns, including potential impacts to cultural resources, will be given due consideration. Federal, State, and local agencies, along with Tribes and other stakeholders that may be interested in or affected by the proposed action that the BLM is evaluating, are invited to participate in the scoping process and, if eligible, may request to participate in the environmental analysis as a cooperating agency.

The BLM will evaluate identified issues and place them into one of three categories:

1. Issues to be resolved in the RMP Amendment,

2. Issues to be resolved through policy or administrative action, or

3. Issues beyond the scope of these plans.

The BLM will provide an explanation as to why an issue was placed in category two or three. The public is also encouraged to help identify any management questions and concerns that should be addressed in the RMP Amendment. The BLM will work collaboratively with interested parties to identify the management decisions that are best suited to local, regional, and national needs and concerns.

The BLM will use an interdisciplinary approach to develop the EA/RMP Amendment in order to consider the variety of resource issues and concerns identified. Specialists with expertise in National Conservation Lands, recreation and visitor services, archaeology, wildlife, and vegetation may be involved in the EA/RMP Amendment.

Before including your address, phone number, email address or other personal identifying information in your comment, you should be aware that your entire comment—including your personal identifying information—may be made publicly available at any time. While you can ask us in your comment to withhold your personal identifying information from public review, we cannot guarantee that we will be able to do so.

(Authority: 40 CFR 1501.9, 43 CFR 1610.2)

Mitchell Leverette,

BLM Eastern States State Director.

[FR Doc. 2022–01184 Filed 1–20–22; 8:45 am]

BILLING CODE 4310–JB–P

DEPARTMENT OF THE INTERIOR

National Park Service

[NPS–WASO–CR–NPS0032650; PPWOCRADI0, PCU00RP15.R50000, 212P104215 (211); OMB Control Number 1024–0018]

Agency Information Collection Activities; Submission to the Office of Management and Budget for Review and Approval; Nomination of Properties for Listing in the National Register of Historic Places

AGENCY: National Park Service, Interior.

ACTION: Notice of information collection; request for comment.

SUMMARY: In accordance with the Paperwork Reduction Act of 1995, we, the National Park Service are proposing to renew an information collection with revisions.

DATES: Interested persons are invited to submit comments on or before February 22, 2022.

ADDRESSES: Written comments and suggestions on the information collection request (ICR) should be submitted by the date specified above in **DATES** to *http://www.reginfo.gov/public/do/PRAMain.* Find this particular information collection by selecting ''Currently under Review—Open for Public Comments'' or by using the search function. Please provide a copy of your comments to the NPS Information Collection Clearance Officer (ADIR–ICCO), 12201 Sunrise Valley Drive, (MS–242) Reston, VA 20191 (mail); or *phadrea_ponds@nps.gov* (email). Please include ''1024–0018'' in the subject line of your comments.

FOR FURTHER INFORMATION CONTACT: To request additional information about this ICR, contact Alexis Abernathy, National Register of Historic Places, by email at *alexis_abernathy@nps.gov,* or by telephone at 202 354–2236. Individuals who are hearing or speech impaired may call the Federal Relay Service at 1–800–877–8339 for TTY assistance. You may also view the ICR at *http://www.reginfo.gov/public/do/PRAMain.*

SUPPLEMENTARY INFORMATION: In accordance with the PRA and 5 CFR 1320.8(d)(1), we provide the general public and other Federal agencies with an opportunity to comment on new, proposed, revised, and continuing collections of information. This helps us assess the impact of our information collection requirements and minimize the public's reporting burden. It also helps the public understand our information collection requirements and provide the requested data in the desired format.

A **Federal Register** notice with a 60-day public comment period soliciting comments on this collection of information was published on June 8, 2021 (86 FR 30478). No comments were received.

As part of our continuing effort to reduce paperwork and respondent burdens, we are again soliciting comments from the public and other Federal agencies on the proposed ICR that is described below. We are especially interested in public comment addressing the following:

(1) Whether or not the collection of information is necessary for the proper performance of the functions of the agency, including whether or not the information will have practical utility.

(2) The accuracy of our estimate of the burden for this collection of information, including the validity of the methodology and assumptions used.

(3) Ways to enhance the quality, utility, and clarity of the information to be collected.

(4) How might the agency minimize the burden of the collection of information on those who are to respond, including through the use of appropriate automated, electronic, mechanical, or other technological collection techniques or other forms of information technology, *e.g.,* permitting electronic submission of response.

Comments that you submit in response to this notice are a matter of public record. Before including your address, phone number, email address, or other personal identifying information in your comment, you should be aware that your entire comment—including your personal identifying information—may be made publicly available at any time. While you can ask us in your comment to withhold your personal identifying information from public review, we cannot guarantee that we will be able to do so.

Abstract: The National Register of Historic Places (NRHP) is the official Federal list of districts, sites, buildings, structures, and objects significant in American history, architecture, archeology, engineering, and culture. National Register properties have significance to the history of communities, States, or the Nation. The National Historic Preservation Act of 1966 requires the Secretary of the Interior to maintain and expand the National Register, and to establish criteria and guidelines for including properties on the National Register. National Register properties must be considered in the planning for Federal

or federally assisted projects and listing in the National Register is required for eligibility for Federal rehabilitation tax incentives.

The information collection requiring OMB approval is the requirement for property owners to submit notarized letters to the SHPO objecting to the property being listed in the National Register.

Title of Collection: Nomination of Properties for Listing in the National Register of Historic Places.

OMB Control Number: 1024–0018.

Form Number: 10–900, 10–900–a, and 10–900–b.

Type of Review: Revision of a currently approved collection.

Respondents/Affected Public: Individuals, Private Sector, and Government.

Total Estimated Number of Annual Respondents: 2,614.

Total Estimated Number of Annual Burden Hours: 226,722.

Respondent's Obligation: Required to obtain or retain a benefit.

Frequency of Collection: On occasion.

Total Estimated Annual Nonhour Burden Cost: None.

An agency may not conduct, or sponsor and a person is not required to respond to a collection of information unless it displays a currently valid OMB control number.

The authority for this action is the Paperwork Reduction Act of 1995 (44 U.S.C. 3501 *et seq.*).

Phadrea Ponds,

Information Collection Clearance Officer, National Park Service.

[FR Doc. 2022–01186 Filed 1–20–22; 8:45 am]

BILLING CODE 4312–52–P

DEPARTMENT OF THE INTERIOR

Office of Natural Resources Revenue

[Docket No. ONRR–2011–0020; DS63644000 DRT000000.CH7000 223D1113RT; OMB Control Number 1012–0004]

Agency Information Collection Activities; Royalty and Production Reporting

AGENCY: Office of Natural Resources Revenue (''ONRR''), Interior.

ACTION: Notice of information collection; request for comment.

SUMMARY: In accordance with the Paperwork Reduction Act of 1995 (''PRA''), ONRR is proposing to renew an information collection. Through this Information Collection Request (''ICR''), ONRR seeks renewed authority to collect information used to verify, audit, collect, and disburse royalty owed on oil, gas, and geothermal resources produced from Federal and Indian lands. ONRR uses forms ONRR–2014, ONRR–4054, and ONRR–4058 as part of these information collection requirements.

DATES: Interested persons are invited to submit written comments on or before February 22, 2022.

ADDRESSES: All comment submissions must (1) reference ''OMB Control Number 1012–0004'' in the subject line; (2) be sent to ONRR before the close of the comment period listed under **DATES**; and (3) be sent through one of the following two methods:

- *Electronically via the Federal eRulemaking Portal:* Please visit *https://www.regulations.gov.* In the Search Box, enter the Docket ID Number for this ICR renewal (''ONRR–2011–0020'') and click ''search'' to view the publications associated with the docket folder. Locate the document with an open comment period and click the ''Comment Now!'' button. Follow the prompts to submit your comment prior to the close of the comment period.
- *Email Submissions:* Please submit your comments to *ONRR_regulationsmailbox@onrr.gov* with the OMB Control Number (''OMB Control Number 1012–0004'') listed in the subject line of your email. Email submissions must be postmarked on or before the close of the comment period.

Docket: To access the docket folder to view the ICR in the **Federal Register** publications, go to *https://www.regulations.gov* and search ''ONRR–2011–0020'' to view renewal notices recently published in the **Federal Register**, publications associated with prior renewals, and applicable public comments received for this ICR. ONRR will make the comments submitted in response to this notice available for public viewing at *https://www.regulations.gov.*

OMB ICR Data: OMB also maintains information on ICR renewals and approvals. You may access this information at *https://www.reginfo.gov/public/do/PRASearch.* Please use the following instructions: Under the ''OMB Control Number'' heading enter ''1012–0004'' and click the ''Search'' button located at the bottom of the page. To view the ICR renewal or OMB approval status, click on the latest entry (based on the most recent date). On the ''View ICR—OIRA Conclusion'' page, check the box next to ''All'' to display all available ICR information provided by OMB.

FOR FURTHER INFORMATION CONTACT: To request additional information about this ICR, please contact Donna Myles, Reference & Reporting Management, ONRR, by email at *Donna.Myles@onrr.gov* or by telephone at (214) 640–9057. Individuals who are hearing or speech impaired may call the Federal Relay Service at 1–800–877–8339 for TTY assistance.

SUPPLEMENTARY INFORMATION: Pursuant to the PRA, 44 U.S.C. 3501, *et seq.,* and 5 CFR 1320.5, all information collections, as defined in 5 CFR 1320.3, require approval by OMB. ONRR may not conduct or sponsor, and you are not required to respond to, a collection of information unless it displays a currently valid OMB control number.

As part of ONRR's continuing effort to reduce paperwork and respondent burdens, ONRR is inviting the public and other Federal agencies to comment on new, proposed, revised, and continuing collections of information in accordance with the PRA and 5 CFR 1320.8(d)(1). This helps ONRR to assess the impact of its information collection requirements and minimize the public's reporting burden. It also helps the public to understand ONRR's information collection requirements and provide the requested data in the desired format.

ONRR is especially interested in public comments addressing the following:

(1) Whether the collection of information is necessary for the proper performance of the functions of the agency, including whether the information will have practical utility;

(2) The accuracy of ONRR's estimate of the burden for this collection of information, including the validity of the methodology and assumptions used;

(3) Ways to enhance the quality, utility, and clarity of the information to be collected; and

(4) How might the agency minimize the burden of the collection of information on those who are to respond, including through the use of appropriate automated, electronic, mechanical, or other technological collection techniques or other forms of information technology, *e.g.,* permitting electronic submission of response.

ONRR published a notice, with a 60-day public comment period soliciting comment of this collection of information, in the **Federal Register** on September 10, 2021 (86 FR 50742). No comments were received.

Comments that you submit in response to this 30-day notice are a matter of public record. ONRR will include or summarize each comment in its request to OMB to approve this ICR. Before including your address, phone number, email address, or other personal identifying information in your

comment, you should be aware that your entire comment–including your personal identifying information–may be made publicly available at any time. While you can ask ONRR in your comment to withhold information from public review, ONRR cannot guarantee that it will be able to do so.

Abstract: (a) General Information: The Federal Oil and Gas Royalty Management Act of 1982 (''FOGRMA'') directs the Secretary of the Interior (''Secretary'') to ''establish a comprehensive inspection, collection and fiscal and production accounting and auditing system to provide the capability to accurately determine oil and gas royalties, interest, fines, penalties, fees, deposits, and other payments owed, and to collect and account for such amounts in a timely manner.'' *See* 30 U.S.C. 1711. ONRR performs these and other mineral revenue management responsibilities for the Secretary. *See* U.S. Department of the Interior Departmental Manual, 112 DM 34.1 (Sept. 9, 2020). ONRR uses the production, royalty, and other information collected in this ICR to ensure that a lessee properly pays royalty and other mineral revenues due on oil, gas, and geothermal resources produced from Federal and Indian lands. ONRR also shares the data with the Bureau of Safety and Environmental Enforcement, Bureau of Ocean Energy Management, Bureau of Land Management, Bureau of Indian Affairs, and Tribal and State governments for their land and lease management responsibilities. The requirement to report accurately and timely is mandatory.

(b) Information Collections: This ICR covers the paperwork requirements under 30 CFR part 1210, subparts B, C, and D, and part 1212, subpart B as follows:

(1) Royalty Reporting: Regulations at 30 CFR part 1210, subparts B and D and part 1212, subpart B, require a lessee to report and remit royalty on oil, gas, and geothermal resources, and to make, retain, and, upon request, provide for inspection accurate and complete records demonstrating proper royalty and other payment. A lessee submits ONRR form 2014, *Report of Sales and Royalty Remittance,* monthly to report royalty on oil, gas, and geothermal leases. Each line contains the royalty owed and the basic elements necessary to calculate the royalty, such as lease number, agreement number, unit number, product code, sales type, sales volume, sales value, processing allowances, transportation allowances, royalty value prior to allowances, and royalty value less allowances. A lessee also uses the form to report certain rents.

(2) Production Reporting: Regulations at 30 CFR part 1210, subparts C and D and part 1212, subpart B, require an operator to submit production reports if it operates a Federal or Indian oil and gas lease or federally approved unit or communitization agreement, and to make, retain, and, upon request, provide for inspection accurate and complete records for demonstrating royalty payment. An operator uses the following forms for production accounting and reporting:

(i) Form ONRR–4054, *Oil and Gas Operations Report:* An operator submits this report monthly. Part A tracks the oil and gas volume produced from each Federal or Indian well. Part B tracks disposition of the oil and gas. Part C tracks the oil and gas inventory on the property. ONRR compares the production information with the sales and other royalty data that a lessee submits on form ONRR–2014 to ensure that the lessee paid and reported the proper royalty on the reported oil and gas production. ONRR also uses the information from parts A, B, and C to track all oil and gas from the point of production to the point of first sale or other disposition.

(ii) Form ONRR–4058, Production Allocation Schedule Report: Unless certain conditions are met, an operator must submit this report if it operates an offshore facility measurement point handling production from a Federal oil and gas lease or federally approved unit agreement that is commingled (with approval) with production from any other source prior to measurement for royalty determination. The report is filed monthly to allocate the production to each source. ONRR uses the data to verify accurate production and royalty reporting.

Title of Collection: Royalty and Production Reporting.

OMB Control Number: 1012–0004.

Form Numbers: ONRR–2014, ONRR–4054, and ONRR–4058.

Type of Review: Extension of a currently approved collection.

Respondents/Affected Public: Businesses.

Total Estimated Number of Annual Respondents: 3,048 oil, gas, and geothermal reporters.

Total Estimated Number of Annual Responses: 11,929,280 lines of data.

Estimated Completion Time per Response: 1.69 minutes per line.

Total Estimated Number of Annual Burden Hours: 337,933 hours.

Respondent's Obligation: Mandatory.

Frequency of Collection: Monthly.

Total Estimated Annual Non-Hour Burden Cost: ONRR identified no ''non-hour cost'' burden associated with this collection of information.

An agency may not conduct or sponsor and a person is not required to respond to a collection of information unless it displays a currently valid OMB control number.

The authority for this action is the PRA (44 U.S.C. 3501, *et seq.*).

Kimbra G. Davis,

Director, Office of Natural Resources Revenue.

[FR Doc. 2022–01158 Filed 1–20–22; 8:45 am]

BILLING CODE 4335–30–P

INTERNATIONAL TRADE COMMISSION

[Investigation No. 337–TA–1290]

Certain Refrigerator Water Filtration Devices and Components Thereof; Notice of Institution of Investigation

AGENCY: U.S. International Trade Commission.

ACTION: Notice.

SUMMARY: Notice is hereby given that a complaint was filed with the U.S. International Trade Commission on December 15, 2021, under section 337 of the Tariff Act of 1930, as amended, on behalf of LG Electronics Inc. of Korea, and LG Electronics Alabama, Inc. of Huntsville, Alabama. A supplement was filed on December 23, 2021. The complaint alleges violations of section 337 based upon the importation into the United States, the sale for importation, and the sale within the United States after importation of certain refrigerator water filtration devices and components thereof by reason of infringement of certain claims of U.S. Patent No. 10,653,984 (''the '984 patent''); U.S. Patent No. 10,639,570 (''the '570 patent''); and U.S. Patent No. 10,188,972 (''the '972 patent''). The complaint further alleges that an industry in the United States exists as required by the applicable Federal Statute. The complainant requests that the Commission institute an investigation and, after the investigation, issue a limited exclusion order and cease and desist orders.

ADDRESSES: The complaint, except for any confidential information contained therein, may be viewed on the Commission's electronic docket (EDIS) at *https://edis.usitc.gov.* For help accessing EDIS, please email *EDIS3Help@usitc.gov.* Hearing impaired individuals are advised that information on this matter can be obtained by

contacting the Commission's TDD terminal on (202) 205–1810. Persons with mobility impairments who will need special assistance in gaining access to the Commission should contact the Office of the Secretary at (202) 205–2000. General information concerning the Commission may also be obtained by accessing its internet server at *https://www.usitc.gov.*

FOR FURTHER INFORMATION CONTACT: Pathenia M. Proctor, The Office of Unfair Import Investigations, U.S. International Trade Commission, telephone (202) 205–2560.

SUPPLEMENTARY INFORMATION:

Authority: The authority for institution of this investigation is contained in section 337 of the Tariff Act of 1930, as amended, 19 U.S.C. 1337, and in section 210.10 of the Commission's Rules of Practice and Procedure, 19 CFR 210.10 (2021).

Scope of Investigation: Having considered the complaint, the U.S. International Trade Commission, on January 14, 2022, *ordered that*—

(1) Pursuant to subsection (b) of section 337 of the Tariff Act of 1930, as amended, an investigation be instituted to determine whether there is a violation of subsection (a)(1)(B) of section 337 in the importation into the United States, the sale for importation, or the sale within the United States after importation of certain products identified in paragraph (2) by reason of infringement of one or more of claims 1–7 of the '984 patent; claims 1–9 of the 570 patent; and claims 1, 6, 10–13, 15, and 17–19 of the '972 patent, and whether an industry in the United States exists as required by subsection (a)(2) of section 337;

(2) Pursuant to section 210.10(b)(1) of the Commission's Rules of Practice and Procedure, 19 CFR 210.10(b)(1), the plain language description of the accused products or category of accused products, which defines the scope of the investigation, is ''water filters for refrigerators, water filter assemblies and interconnection subassemblies for refrigerators, and water purifying apparatuses and filter structures for refrigerators'';

(3) For the purpose of the investigation so instituted, the following are hereby named as parties upon which this notice of investigation shall be served:

(a) The complainant is:

LG Electronics Inc., LG Twin Towers, 128 Yeoui-daero, Yeongdeungpo-gu, Seoul, Republic of Korea, 07736

LG Electronics Alabama, Inc., 201 James Record Road, Huntsville, AL 35824

(b) The respondents are the following entities alleged to be in violation of section 337, and are the parties upon which the complaint is to be served:

Clearwater Filters, 770 Canary Drive, Lakewood, NJ 08701

Express Parts LLC d/b/a Express Parts!!!, 78 Broad Street, Keyport, NJ 07735

Freshlab LLC, 9473 NW 24th Rd., Gainesville, FL 32606

Zhang Ping d/b/a Ice Water Filter, Qianxiangzhenqianyicun, Dongyang, Zhejiang, 322100, China

Jiangsu Angkua Environmental Technical Co., Ltd., 555 Yishou NorthRoad, Rugao, Nantong, Jiangsu, 226500, China

Liu Qi d/b/a LQQY, No. 2–19, Baijiazhuang Village, Zaolin Township, Lishi District, Luliang City, Shanxi Province, 033099, China

Lvliangshilishiquhuiliwujinbaihuoshan Ghang d/b/a LYLYMX, Zaolin Township, Lishi District, Luliang, Shanxi Province, 033000, China

Ninbo Haishu Bichun Technology Co., Ltd. D/B/A Ninbo Hai Shu Bi, Chun Ke Ji You Xian Gong Si D/B/A Pureza Filters, 747 N Church Rd., Unit G1, Elmhurst, IL 60126

Ninbo Haishu Keze Replacement Equipment Co., Ltd., d/b/a Ningboshihaishukezejinghua shebeiyou Xiangongsi D/B/A Kozero Filter, Haishuquwang chungongyeyuanqu, Kexinlu269hao, Ningboshi, Zhejiang, 315100, China

Ningbo Bichun Technology Co., Ltd., No. 269, Kexin Avenue, Wangchun Industrial Park, Haishu District, Ningbo City, Zhejiang Province, 315000, China

Ningbo Haishu Shun'anjie Water Purification Equipment LLC, No. 181–197, Shanshan Road, Wangchun Industrial Park, Haishu District, Ningbo, Zhejiang, 315000, China

Pursafet Water Filter (Wuhan) Inc., (10) 1st–4th Floor, Plant 1, No. 1, Mintian Village, Jinghe Office, Dongxihu District, Wuhan, Hubei, 430040, China

Shenzen Hangling E-Commerce Co. Ltd, D/B/A Shenzhenshilingh angdianzhishangwuy Ouxiangongshi d/b/a Best Belvita, 747 N Church Rd., Unit G1, Elmhurst, IL 60126

Shenzhen Yu Tian Qi Technology Co., Ltd., D/B/A Shen Zhen Shi Yu, Tian Qi Ke Ji You Xian Gong Si d/b/a GLACIERFRESH, Longgangquhang gangjiedao, Huaxi12xiang9hao302shi, Shenzhen, Guangdong, 518356, China

Aicuiying d/b/a Belvita Water, 803, Building 2, No. 592, Bulong Road, Bantian Street, Shenzhen, Guangdong Province, 518000, China

Isave Strategic Marketing Group LLC d/b/a Isave, 1460 Broadway, New York, NY 10036

Qinghaishunzexiaofangjianceyouxiang Ongsi, d/b/a Ezeey, Room 20711, 7th Floor, Unit 2, Building 1, No. 71, Wusi Street, Chengxi District, Xining City, Qinghai Province, 810001, China

Zhenpingxianjiaxuanyazhubaofuzhu Anggongyipinyouxia, d/b/a Jiaxuanyazhubaofuzhuang, Dong liguojierqi15–2–301, Jianganqu erqilu89hao, Wuhanshi, Hubeisheng, 430000, China

All Filters LLC d/b/a Allfilters, 1991 W Parkway Blvd., Salt Lake City, UT 84119

GT Sourcing Inc. d/b/a GT Sourcing, 15 Melnick Dr., Unit 22, Monsey, NY 10952

JJ Imports LLC d/b/a Prime Filters, 319 E 54 St., Elmwood Park, NJ 07407

Tianjin Tianchuang Best Pure Environmental Science And Technology Co. Ltd., d/b/a Tianjin Tianchuang Bestpure Huanbao Keji Co. Ltd., d/b/a Healthy Home~, Tianjin Tianjin Room 1247, Building 1, NO. 118, Ri, Tianjin, Tianjin, 300301, China

Top Pure (Usa) Inc., d/b/a Toppure, d/b/a Icepure, 717 San Gabriel River Pkwy, #A, Pico Rivera, CA 90660

W&L Trading LLC, d/b/a Aqualink, 1827 Peppervine Rd, Frisco, TX 75033–0707

Yunda H&H Tech (Tianjin) Co., LTD., d/b/a Tianjin Yuanda Gongmao, Youxian Gongsi d/b/a Pureplus, 729hao Jinghai Jingji Kaifa Qu, Tianjinshi, Tianjinshi, 301600, China

Refresh Filters LLC, d/b/a Refresh My Water, 1460 Broadway, New York, NY 10036

Qingdao Ecopure Filter Co., Ltd, d/b/a Waterdropdirect, No. 13 Yishengbai Rd., Environmental Protection Industry Zone, Qingdao, Shandong, 266200, China

Qingdao Maxwell Commercial and Trading Company Ltd, d/b/a Water Purity Expert, No. 401 Mincheng Rd, Room 1102, Unit 2, Building 16, Qingdao Chengyang, Shandong, 266000, China

Qingdao Uniwell Trading Co., Ltd., d/b/a Qingdao Youniwei Shang Mao, You Xian Gong Si, d/b/a Uniwell Filter, Xianggangdonglu195hao, Shangshizhongxin7haolou403, Qingdao, Shandong, 266100, China

(c) The Office of Unfair Import Investigations, U.S. International Trade Commission, 500 E Street SW, Suite 401, Washington, DC 20436; and

(4) For the investigation so instituted, the Chief Administrative Law Judge, U.S. International Trade Commission,

shall designate the presiding Administrative Law Judge.

Responses to the complaint and the notice of investigation must be submitted by the named respondents in accordance with section 210.13 of the Commission's Rules of Practice and Procedure, 19 CFR 210.13. Pursuant to 19 CFR 201.16(e) and 210.13(a), as amended in 85 FR 15798 (March 19, 2020), such responses will be considered by the Commission if received not later than 20 days after the date of service by the complainants of the complaint and the notice of investigation. Extensions of time for submitting responses to the complaint and the notice of investigation will not be granted unless good cause therefor is shown.

Failure of a respondent to file a timely response to each allegation in the complaint and in this notice may be deemed to constitute a waiver of the right to appear and contest the allegations of the complaint and this notice, and to authorize the administrative law judge and the Commission, without further notice to the respondent, to find the facts to be as alleged in the complaint and this notice and to enter an initial determination and a final determination containing such findings, and may result in the issuance of an exclusion order or a cease and desist order or both directed against the respondent.

By order of the Commission.

Issued: January 14, 2022.

Lisa Barton,

Secretary to the Commission.

[FR Doc. 2022–01113 Filed 1–20–22; 8:45 am]

BILLING CODE 7020–02–P

INTERNATIONAL TRADE COMMISSION

[Investigation Nos. 701–TA–679–680 and 731–TA–1585–1586 (Preliminary)]

Sodium Nitrite From India and Russia; Institution of Antidumping and Countervailing Duty Investigations and Scheduling of Preliminary Phase Investigations

AGENCY: United States International Trade Commission.

ACTION: Notice.

SUMMARY: The Commission hereby gives notice of the institution of investigations and commencement of preliminary phase antidumping and countervailing duty investigation Nos. 701–TA–679–680 and 731–TA–1585–1586 (Preliminary) pursuant to the Tariff Act of 1930 (''the Act'') to determine whether there is a reasonable indication that an industry in the United States is materially injured or threatened with material injury, or the establishment of an industry in the United States is materially retarded, by reason of imports of sodium nitrite from India and Russia, provided for in subheading 2834.10.10 of the Harmonized Tariff Schedule of the United States, that are alleged to be sold in the United States at less than fair value and alleged to be subsidized by the Governments of India and Russia. Unless the Department of Commerce (''Commerce'') extends the time for initiation, the Commission must reach a preliminary determination in antidumping and countervailing duty investigations in 45 days, or in this case by February 28, 2022. The Commission's views must be transmitted to Commerce within five business days thereafter, or by March 7, 2022.

DATES: January 13, 2022.

FOR FURTHER INFORMATION CONTACT: Peter Stebbins ((202) 205–2039), Office of Investigations, U.S. International Trade Commission, 500 E Street SW, Washington, DC 20436. Hearing-impaired persons can obtain information on this matter by contacting the Commission's TDD terminal on 202–205–1810. Persons with mobility impairments who will need special assistance in gaining access to the Commission should contact the Office of the Secretary at 202–205–2000. General information concerning the Commission may also be obtained by accessing its internet server (*https://www.usitc.gov*). The public record for these investigations may be viewed on the Commission's electronic docket (EDIS) at *https://edis.usitc.gov.*

SUPPLEMENTARY INFORMATION:

Background.—These investigations are being instituted, pursuant to sections 703(a) and 733(a) of the Tariff Act of 1930 (19 U.S.C. 1671b(a) and 1673b(a)), in response to a petition filed on January 13, 2022, by Chemtrade Chemicals US LLC, Parsippany, New Jersey.

For further information concerning the conduct of these investigations and rules of general application, consult the Commission's Rules of Practice and Procedure, part 201, subparts A and B (19 CFR part 201), and part 207, subparts A and B (19 CFR part 207).

Participation in the investigations and public service list.—Persons (other than petitioners) wishing to participate in the investigations as parties must file an entry of appearance with the Secretary to the Commission, as provided in §§ 201.11 and 207.10 of the Commission's rules, not later than seven days after publication of this notice in the **Federal Register**. Industrial users and (if the merchandise under investigation is sold at the retail level) representative consumer organizations have the right to appear as parties in Commission antidumping duty and countervailing duty investigations. The Secretary will prepare a public service list containing the names and addresses of all persons, or their representatives, who are parties to these investigations upon the expiration of the period for filing entries of appearance.

Limited disclosure of business proprietary information (BPI) under an administrative protective order (APO) and BPI service list.—Pursuant to § 207.7(a) of the Commission's rules, the Secretary will make BPI gathered in these investigations available to authorized applicants representing interested parties (as defined in 19 U.S.C. 1677(9)) who are parties to the investigations under the APO issued in the investigations, provided that the application is made not later than seven days after the publication of this notice in the **Federal Register**. A separate service list will be maintained by the Secretary for those parties authorized to receive BPI under the APO.

Conference.— In light of the restrictions on access to the Commission building due to the COVID–19 pandemic, the Commission is conducting the staff conference through video conferencing on February 3, 2022. Requests to appear at the conference should be emailed to *preliminaryconferences@usitc.gov* (DO NOT FILE ON EDIS) on or before February 1, 2022. Please provide an email address for each conference participant in the email. Information on conference procedures will be provided separately and guidance on joining the video conference will be available on the Commission's Daily Calendar. A nonparty who has testimony that may aid the Commission's deliberations may request permission to participate by submitting a short statement.

Please note the Secretary's Office will accept only electronic filings during this time. Filings must be made through the Commission's Electronic Document Information System (EDIS, *https://edis.usitc.gov*). No in-person paper-based filings or paper copies of any electronic filings will be accepted until further notice.

Written submissions.—As provided in §§ 201.8 and 207.15 of the Commission's rules, any person may submit to the Commission on or before February 8, 2022, a written brief containing information and arguments

pertinent to the subject matter of the investigations. Parties shall file written testimony and supplementary material in connection with their presentation at the conference no later than noon on February 2, 2022. All written submissions must conform with the provisions of § 201.8 of the Commission's rules; any submissions that contain BPI must also conform with the requirements of §§ 201.6, 207.3, and 207.7 of the Commission's rules. The Commission's *Handbook on Filing Procedures,* available on the Commission's website at *https://www.usitc.gov/documents/handbook_on_filing_procedures.pdf,* elaborates upon the Commission's procedures with respect to filings.

In accordance with §§ 201.16(c) and 207.3 of the rules, each document filed by a party to the investigations must be served on all other parties to the investigations (as identified by either the public or BPI service list), and a certificate of service must be timely filed. The Secretary will not accept a document for filing without a certificate of service.

Certification.—Pursuant to § 207.3 of the Commission's rules, any person submitting information to the Commission in connection with these investigations must certify that the information is accurate and complete to the best of the submitter's knowledge. In making the certification, the submitter will acknowledge that any information that it submits to the Commission during these investigations may be disclosed to and used: (i) By the Commission, its employees and Offices, and contract personnel (a) for developing or maintaining the records of these or related investigations or reviews, or (b) in internal investigations, audits, reviews, and evaluations relating to the programs, personnel, and operations of the Commission including under 5 U.S.C. Appendix 3; or (ii) by U.S. government employees and contract personnel, solely for cybersecurity purposes. All contract personnel will sign appropriate nondisclosure agreements.

Authority: These investigations are being conducted under authority of title VII of the Tariff Act of 1930; this notice is published pursuant to § 207.12 of the Commission's rules.

By order of the Commission.

Issued: January 14, 2022.

Lisa Barton,

Secretary to the Commission.

[FR Doc. 2022–01089 Filed 1–20–22; 8:45 am]

BILLING CODE 7020–02–P

DEPARTMENT OF JUSTICE

Bureau of Alcohol, Tobacco, Firearms and Explosives

[OMB 1140–0052]

Agency Information Collection Activities; Proposed eCollection of eComments Requested; Extension With Change of a Currently Approved Collection; ATF's Office of Strategic Management Environmental Assessment Outreach

AGENCY: Bureau of Alcohol, Tobacco, Firearms and Explosives, Department of Justice.

ACTION: 60-Day notice.

SUMMARY: The Bureau of Alcohol, Tobacco, Firearms and Explosives (ATF), Department of Justice (DOJ), will submit the following information collection request to the Office of Management and Budget (OMB) for review and approval in accordance with the Paperwork Reduction Act of 1995. The proposed information collection (IC) OMB 1140–0052 (ATF's Office of Strategic Management Environmental Assessment Outreach) is being updated to include a short purpose statement. The proposed information collection is also being published to obtain comments from the public and affected agencies.

DATES: Comments are encouraged and will be accepted for 60 days until March 22, 2022.

FOR FURTHER INFORMATION CONTACT: If you have additional comments regarding the estimated public burden or associated response time, suggestions, or need a copy of the proposed information collection instrument with instructions, or additional information, contact: Chad Yoder, Office of Strategic Management, Director's Office, by mail at 99 New York Ave. NE, Washington, DC 20226, email at *Chad.Yoder@atf.gov,* or telephone at 202–407–1746.

SUPPLEMENTARY INFORMATION: Written comments and suggestions from the public and affected agencies concerning the proposed collection of information are encouraged. Your comments should address one or more of the following four points:

—Evaluate whether the proposed collection of information is necessary for the proper performance of the functions of the agency, including whether the information will have practical utility;

—Evaluate the accuracy of the agency's estimate of the burden of the proposed collection of information, including the validity of the methodology and assumptions used;

—Evaluate whether and, if so, how the quality, utility, and clarity of the information to be collected can be enhanced; and

—Minimize the burden of the collection of information on those who are to respond, including through the use of appropriate automated, electronic, mechanical, or other technological collection techniques or other forms of information technology, *e.g.,* permitting electronic submission of responses.

Overview of This Information Collection

1. *Type of Information Collection (check justification or form 83):* Extension with Change of a Currently Approved Collection.

2. *The Title of the Form/Collection:* ATF's Office of Strategic Management Environmental Assessment Outreach.

3. *The agency form number, if any, and the applicable component of the Department sponsoring the collection:*

Form number (if applicable): None.

Component: Bureau of Alcohol, Tobacco, Firearms and Explosives, U.S. Department of Justice.

4. *Affected public who will be asked or required to respond, as well as a brief abstract:*

Primary: Business or other for-profit.

Other (if applicable): Not-for-profit institutions, Federal Government, State, Local, or Tribal Government.

Abstract: ATF's Office of Strategic Management Environmental Assessment Outreach is distributed to Bureau of Alcohol, Tobacco, Firearms, and Explosives stakeholders to solicit feedback about the agency's internal strengths, weaknesses, and external opportunities.

5. *An estimate of the total number of respondents and the amount of time estimated for an average respondent to respond:* An estimated 1,500 respondents will respond to this collection once annually, and it will take each respondent approximately 18 minutes to complete their responses.

6. *An estimate of the total public burden (in hours) associated with the collection:* The estimated annual public burden associated with this collection is 450 hours, which is equal to 1,500 (total respondents) * 1 (# of response per respondent) * .3 (18 minutes or the time taken to prepare each response).

If additional information is required contact: Melody Braswell, Department Clearance Officer, United States Department of Justice, Justice Management Division, Policy and Planning Staff, Two Constitution

Square, 145 N Street NE, Mail Stop 3.E–405A, Washington, DC 20530.

Dated: January 14, 2022.

Melody Braswell,

Department Clearance Officer for PRA, U.S. Department of Justice.

[FR Doc. 2022–01104 Filed 1–20–22; 8:45 am]

BILLING CODE 4410–FY–P

DEPARTMENT OF JUSTICE

Drug Enforcement Administration

[Docket No. DEA–372]

Exempt Chemical Preparations Under the Controlled Substances Act

AGENCY: Drug Enforcement Administration, Department of Justice.

ACTION: Order with opportunity for comment.

SUMMARY: The applications for exempt chemical preparations received by the Drug Enforcement Administration between April 1, 2021, and June 30, 2021, as listed below, were accepted for filing and have been approved or denied as indicated.

DATES: Interested persons may file written comments on this order in accordance with 21 CFR 1308.23(e). Electronic comments must be submitted, and written comments must be postmarked, on or before March 22, 2022. Commenters should be aware that the electronic Federal Docket Management System will not accept comments after 11:59 p.m. Eastern Time on the last day of the comment period.

ADDRESSES: To ensure proper handling of comments, please reference ''Docket No. DEA–372'' on all correspondence, including any attachments.

Electronic comments: Drug Enforcement Administration encourages that all comments be submitted through the Federal eRulemaking Portal, which provides the ability to type short comments directly into the comment field on the web page or to attach a file for lengthier comments. Please go to *http://www.regulations.gov* and follow the online instructions at that site for submitting comments. Upon completion of your submission you will receive a Comment Tracking Number for your comment. Please be aware that submitted comments are not instantaneously available for public view on *Regulations.gov.* If you have received a comment tracking number, your comment has been successfully submitted and there is no need to resubmit the same comment.

Paper comments: Paper comments that duplicate the electronic submission are not necessary and are discouraged. Should you wish to mail a comment *in lieu of* an electronic comment, it should be sent via regular or express mail to: Drug Enforcement Administration, Attention: DEA Federal Register Representative/DRW, 8701 Morrissette Drive, Springfield, Virginia 22152.

FOR FURTHER INFORMATION CONTACT: Terrence L. Boos, Ph.D., Diversion Control Division, Drug Enforcement Administration; Telephone: (571) 362–8201.

SUPPLEMENTARY INFORMATION:

Posting of Public Comments

Please note that all comments received are considered part of the public record and made available for public inspection online at *http://www.regulations.gov* and in the DEA's public docket. Such information includes personal identifying information (such as your name, address, etc.) voluntarily submitted by the commenter. The Freedom of Information Act applies to all comments received.

If you want to submit personal identifying information (such as your name, address, etc.) as part of your comment, but do not want it to be posted online or made available in the public docket, you must include the phrase ''PERSONAL IDENTIFYING INFORMATION'' in the first paragraph of your comment. You must also place all the personal identifying information you do not want posted online or made available in the public docket in the first paragraph of your comment and identify what information you want redacted.

If you want to submit confidential business information as part of your comment, but do not want it to be posted online or made available in the public docket, you must include the phrase ''CONFIDENTIAL BUSINESS INFORMATION'' in the first paragraph of your comment. You must also prominently identify confidential business information to be redacted within the comment.

Comments containing personal identifying information and confidential business information identified as directed above will generally be made publicly available in redacted form. If a comment has so much confidential business information that it cannot be effectively redacted, all or part of that comment may not be made publicly available. Comments posted to *http://www.regulations.gov* may include any personal identifying information (such as name, address, and phone number) included in the text of your electronic submission that is not identified as directed above as confidential.

An electronic copy of this document is available at *http://www.regulations.gov* for easy reference.

Legal Authority

Section 201 of the Controlled Substances Act (CSA) (21 U.S.C. 811) authorizes the Attorney General, by regulation, to exempt from certain provisions of the CSA certain compounds, mixtures, or preparations containing a controlled substance, if he finds that such compounds, mixtures, or preparations meet the requirements detailed in 21 U.S.C. 811(g)(3)(B).[1] The Drug Enforcement Administration (DEA) regulations at 21 CFR 1308.23 and 1308.24 further detail the criteria by which the DEA Assistant Administrator may exempt a chemical preparation or mixture from certain provisions of the CSA. The Assistant Administrator may, pursuant to 21 CFR 1308.23(f), modify or revoke the criteria by which exemptions are granted and modify the scope of exemptions at any time.

Exempt Chemical Preparation Applications Submitted Between April 1, 2021, and June 30, 2021

The Assistant Administrator received applications between April 1, 2021, and June 30, 2021, requesting exempt chemical preparation status detailed in 21 CFR 1308.23. Pursuant to the criteria stated in 21 U.S.C. 811(g)(3)(B) and in 21 CFR 1308.23, the Assistant Administrator has found that each of the compounds, mixtures, and preparations described in Chart I below is intended for laboratory, industrial, educational, or special research purposes and not for general administration to a human being or animal and either: (1) Contains no narcotic controlled substance and is packaged in such a form or concentration that the packaged quantity does not present any significant potential for abuse; or (2) contains either a narcotic or non-narcotic controlled substance and one or more adulterating or denaturing agents in such a manner, combination, quantity, proportion, or concentration that the preparation or mixture does not present any potential for abuse and, if the preparation or mixture contains a narcotic controlled substance, is formulated in such a manner that it incorporates methods of denaturing or other means so that the preparation or

[1] This authority has been delegated from the Attorney General to the DEA Administrator by 28 CFR 0.100, and subsequently redelegated to the Deputy Assistant Administrator pursuant to 28 CFR 0.104 and Section 7 of the appendix to subpart R of part 0.

mixture is not liable to be abused or have ill effects, if abused, and so that the narcotic substance cannot in practice be removed.

Accordingly, pursuant to 21 U.S.C. 811(g)(3)(B), 21 CFR 1308.23, and 21 CFR 1308.24, the Assistant Administrator has determined that each of the chemical preparations or mixtures generally described in Chart I below and specifically described in the application materials received by DEA is exempt, to the extent described in 21 CFR 1308.24, from application of sections 302, 303, 305, 306, 307, 308, 309, 1002, 1003, and 1004 (21 U.S.C. 822–823, 825–829, and 952–954) of the CSA, and 21 CFR 1301.74, as of the date that was provided in the approval letters to the individual requesters.

Scope of Approval

The exemptions are applicable only to the precise preparation or mixture described in the application submitted to DEA in the form(s) listed in this order and only for those above mentioned sections of the CSA and the CFR. In accordance with 21 CFR 1308.24(h), any change in the quantitative or qualitative composition of the preparation or mixture, or change in the trade name or other designation of the preparation or mixture after the date of application requires a new application. The requirements set forth in 21 CFR 1308.24(b)–(e) apply to the exempted materials. In accordance with 21 CFR 1308.24(g), DEA may prescribe requirements other than those set forth in 21 CFR 1308.24(b)–(e) on a case-by-case basis for materials exempted in bulk quantities. Accordingly, in order to limit opportunity for diversion from the larger bulk quantities, DEA has determined that each of the exempted bulk products listed in this order may only be used in-house by the manufacturer, and may not be distributed for any purpose, or transported to other facilities.

Additional exempt chemical preparation requests received between April 1, 2021, and June 30, 2021, and not otherwise referenced in this order, may remain under consideration until DEA receives additional information required, pursuant to 21 CFR 1308.23(d), as detailed in separate correspondence to individual requesters. DEA's order on such requests will be communicated to the public in a future **Federal Register** publication.

DEA also notes that these exemptions are limited to exemption from only those sections of the CSA and the CFR that are specifically identified in 21 CFR 1308.24(a). All other requirements of the CSA and the CFR apply, including registration as an importer as required by 21 U.S.C. 957.

CHART I

Supplier	Product name	Form	Application date
Aalto Scientific, Ltd	Immunoassay Base (Level A–E)	Glass or plastic bottle or flask: 500 mL–1 L.	4/13/2021
Aalto Scientific, Ltd	Immunoassay Base (Level A–E)	Glass or plastic bottle or flask: 100 mL–500 mL.	4/13/2021
Aalto Scientific, Ltd	Immunoassay Base (Level A–E)	Glass or plastic bottle or flask: 1 mL–100 mL.	4/13/2021
Aalto Scientific, Ltd	Immunoassy Base (Level A–E)	Glass vial, bottle, or flask: 1 mL	4/1/2021
Aalto Scientific, Ltd	TDM Base (Level A–E)	Glass vial, bottle, or flask: 500 mL–1L.	4/1/2021
Aalto Scientific, Ltd	TDM Base (Level A–E)	Glass vial, bottle, or flask: 100mL–500 mL.	4/1/2021
Aalto Scientific, Ltd	TDM Base (Level A–E)	Glass vial, bottle, or flask: 1 mL–100 mL.	4/1/2021
Aalto Scientific, Ltd	TDM Beckman AU Base (Level A–E)	Glass vial, bottle, or flask: 500 mL–1L.	4/1/2021
Aalto Scientific, Ltd	TDM Beckman AU Base (Level A–E)	Glass vial, bottle, or flask: 100mL–500 mL.	4/1/2021
Aalto Scientific, Ltd	TDM Beckman AU Base (Level A–E)	Glass vial, bottle, or flask: 1 mL–100 mL.	4/1/2021
ARK Diagnostics, Inc	DRI Fentanyl II Control	Kit: 4 Dropper vials, 10 mL each	4/15/2021
ARK Diagnostics, Inc	DRI Fentanyl II Cutoff Calibrator	Kit: 2 Dropper vials, 10 mL each	4/15/2021
Audit MicroControls	Linearity FD Fertility Siemens Atellica/Centaur	Kit: 5 vials; 3 mL each	4/29/2021
Audit MicroControls	Linearity FD Fertility Siemens Atellica/Centaur, Set 2 Level A	Glass vial: 3 mL	4/29/2021
Audit MicroControls	Linearity FD Fertility Siemens Atellica/Centaur, Set 2 Level B	Glass vial: 3 mL	4/29/2021
Audit MicroControls	Linearity FD Fertility Siemens Atellica/Centaur, Set 2 Level C	Glass vial: 3 mL	4/29/2021
Audit MicroControls	Linearity FD Fertility Siemens Atellica/Centaur, Set 2 Level D	Glass vial: 3 mL	4/29/2021
Audit MicroControls	Linearity FD Fertility Siemens Atellica/Centaur, Set 2 Level E	Glass vial: 3 mL	4/29/2021
Audit MicroControls	Linearity FD TDM Siemens Atellica/Centaur	Kit: 5 vials; 5 mL each	4/27/2021
Cayman Chemical Company	(S)-5-fluoro ADB (CRM); 100 μg/mL in Acetonitrile	Glass ampule: 1.0 mL	4/14/2021
Cayman Chemical Company	2′-fluoro ortho-Fluorofentanyl (hydrochloride) (CRM); 100 μg/mL in Methanol.	Glass ampule: 1.0 mL	4/14/2021
Cayman Chemical Company	4-ANPP (CRM); 100 μg/mL in Methanol	Glass ampule: 1.0 mL	4/14/2021
Cayman Chemical Company	4-ANPP (CRM); 100 μg/mL in Methanol	Glass ampule: 1.0 mL	4/14/2021
Cayman Chemical Company	4-ANPP-13C6 (CRM); 100 μg/mL in Methanol	Glass ampule: 1.0 mL	4/14/2021
Cayman Chemical Company	4-ANPP-d5 (CRM); 100 μg/mL in Methanol	Glass ampule: 1.0 mL	4/14/2021
Cayman Chemical Company	4-ANPP-d5 (CRM); 100 μg/mL in Methanol	Glass ampule: 1.0 mL	4/14/2021
Cayman Chemical Company	4′-chloro-α-Pyrrolidinovalerophenone (hydrochloride) (CRM); 100 μg/mL in Methanol.	Glass ampule: 1.0 mL	4/14/2021
Cayman Chemical Company	4-cyano CUMYL-BUTINACA (CRM); 100 μg/mL in Methanol	Glass ampule: 1.0 mL	4/14/2021
Cayman Chemical Company	4′-methyl Acetyl fentanyl (hydrochloride) (CRM); 100 μg/mL in Methanol	Glass ampule: 1.0 mL	4/14/2021
Cayman Chemical Company	4′-methyl Acetyl fentanyl-d5 (hydrochloride) (CRM); 100 μg/mL in Methanol.	Glass ampule: 1.0 mL	4/14/2021
Cayman Chemical Company	4-methyl-α-Ethylaminopentiophenone (hydrochloride) (CRM); 100 μg/mL in Methanol.	Glass ampule: 1.0 mL	4/14/2021
Cayman Chemical Company	4′-methyl-α-Pyrrolidinohexanophenone (hydrochloride) (CRM); 100 μg/mL in Methanol.	Glass ampule: 1.0 mL	4/14/2021
Cayman Chemical Company	5-fluoro CUMYL-PINACA; 100 μg/mL in Methanol	Glass ampule: 1.0 mL	4/14/2021
Cayman Chemical Company	Acrylfentanyl (hydrochloride) (CRM); 100 μg/mL in Methanol	Glass ampule: 1.0 mL	4/14/2021
Cayman Chemical Company	Acrylfentanyl-d5 (hydrochloride) (CRM); 100 μg/mL in Methanol	Glass ampule: 1.0 mL	4/14/2021
Cayman Chemical Company	Butyryl fentanyl-d5 (hydrochloride) (CRM); 100 μg/mL in Methanol	Glass ampule: 1.0 mL	4/14/2021

CHART I—Continued

Supplier	Product name	Form	Application date
Cayman Chemical Company	Cocaethylene (CRM); 100 μg/mL in Methanol	Glass ampule: 1.0 mL	4/14/2021
Cayman Chemical Company	Cyclohexyl fentanyl (hydrochloride) (CRM); 100 μg/mL in Methanol	Glass ampule: 1.0 mL	4/14/2021
Cayman Chemical Company	Cyclohexyl fentanyl-d5 (hydrochloride) (CRM); 100 μg/mL in Methanol	Glass ampule: 1.0 mL	4/14/2021
Cayman Chemical Company	Cyclopentyl fentanyl (hydrochloride) (CRM); 100 μg/mL in Methanol	Glass ampule: 1.0 mL	4/14/2021
Cayman Chemical Company	Cyclopropyl fentanyl (hydrochloride) (CRM); 100 μg/mL in Methanol	Glass ampule: 1.0 mL	4/14/2021
Cayman Chemical Company	Cyclopropyl fentanyl-13C6 (hydrochloride) (CRM); 100 μg/mL in Methanol.	Glass ampule: 1.0 mL	4/14/2021
Cayman Chemical Company	D8-THCA-A (CRM) 1 mg/ml, 1 mL in acetonitrile	Glass ampule: 1 mL	6/8/2021
Cayman Chemical Company	D8-THCA-A (CRM) 100 μg/ml, 1 mL in acetonitrile	Glass ampule: 1 mL	6/8/2021
Cayman Chemical Company	D8-THCH (CRM) 1 mg/ml, 1 mL in acetonitrile	Glass ampule: 1 mL	6/8/2021
Cayman Chemical Company	D8-THCH (CRM) 1 mg/ml, 1 mL in methanol	Glass ampule: 1 mL	6/8/2021
Cayman Chemical Company	D8-THCH (CRM) 100 μg/ml, 1 mL in acetonitrile	Glass ampule: 1 mL	6/8/2021
Cayman Chemical Company	D8-THCH (CRM) 100 μg/ml, 1 mL in methanol	Glass ampule: 1 mL	6/8/2021
Cayman Chemical Company	D9-THCB (CRM) 100 μg/mL, 1 mL acetonitrile	Glass ampule: 1 mL	6/8/2021
Cayman Chemical Company	D9-THCB (CRM) 1 mg/ml, 1 mL in acetonitrile	Glass ampule: 1 mL	6/8/2021
Cayman Chemical Company	D9-THCB (CRM) 1 mg/ml, 1 mL methanol	Glass ampule: 1 mL	6/8/2021
Cayman Chemical Company	D9-THCB (CRM) 100 μg/mL, 1 mL methanol	Glass ampule: 1 mL	6/8/2021
Cayman Chemical Company	D9-THCBA-A (CRM) 1 mg/ml, 1 mL in acetonitrile	Glass ampule: 1 mL	6/8/2021
Cayman Chemical Company	D9-THCBA-A (CRM) 100 μg/mL, 1 mL acetonitrile	Glass ampule: 1 mL	6/8/2021
Cayman Chemical Company	D9-THCH (CRM) 1 mg/ml, 1 mL in acetonitrile	Glass ampule: 1 mL	6/8/2021
Cayman Chemical Company	D9-THCH (CRM) 1 mg/ml, 1 mL in methanol	Glass ampule: 1 mL	6/8/2021
Cayman Chemical Company	D9-THCH (CRM) 100 μg/ml, 1 mL in acetonitrile	Glass ampule: 1 mL	6/8/2021
Cayman Chemical Company	D9-THCH (CRM) 100 μg/ml, 1 mL in methanol	Glass ampule: 1 mL	6/8/2021
Cayman Chemical Company	D9-THCHA–A (CRM) 1 mg/ml, 1 mL in acetonitrile	Glass ampule: 1 mL	6/8/2021
Cayman Chemical Company	D9-THCHA–A (CRM) 100 μg/ml, 1 mL in acetonitrile	Glass ampule: 1 mL	6/8/2021
Cayman Chemical Company	D9-THCP (CRM) 1 mg/ml, 1 mL in acetonitrile	Glass ampule: 1 mL	6/8/2021
Cayman Chemical Company	D9-THCP (CRM) 1 mg/ml, 1 mL methanol	Glass ampule: 1 mL	6/8/2021
Cayman Chemical Company	D9-THCP (CRM) 100 μg/mL, 1 mL acetonitrile	Glass ampule: 1 mL	6/8/2021
Cayman Chemical Company	D9-THCP (CRM) 100 μg/mL, 1 mL methanol	Glass ampule: 1 mL	6/8/2021
Cayman Chemical Company	D9-THCPA-A (CRM) 1 mg/ml, 1 mL in acetonitrile	Glass ampule: 1 mL	6/8/2021
Cayman Chemical Company	D9-THCPA-A (CRM) 100 μg/mL, 1 mL acetonitrile	Glass ampule: 1 mL	6/8/2021
Cayman Chemical Company	FIBF (hydrochloride) (CRM); 100 μg/mL in Methanol	Glass ampule: 1.0 mL	4/14/2021
Cayman Chemical Company	FIBF-d7 (hydrochloride) (CRM); 100 μg/mL in Methanol	Glass ampule: 1.0 mL	4/14/2021
Cayman Chemical Company	Furanyl fentanyl (hydrochloride) (CRM); 100 μg/mL in Methanol	Glass ampule: 1.0 mL	4/14/2021
Cayman Chemical Company	Furanyl fentanyl-13C6 (hydrochloride) (CRM); 100 μg/mL in Methanol	Glass ampule: 1.0 mL	4/14/2021
Cayman Chemical Company	Furanyl fentanyl-d5 (hydrochloride) (CRM); 100 μg/mL in Methanol	Glass ampule: 1.0 mL	4/14/2021
Cayman Chemical Company	Isobutyryl fentanyl (hydrochloride) (CRM); 100 μg/mL in Methanol	Glass ampule: 1.0 mL	4/14/2021
Cayman Chemical Company	Isobutyryl fentanyl-d5 (hydrochloride) (CRM); 100 μg/mL in Methanol	Glass ampule: 1.0 mL	4/14/2021
Cayman Chemical Company	Lorcaserin (hydrochloride) (CRM); 100 μg/mL in Methanol	Glass ampule: 1.0 mL	4/14/2021
Cayman Chemical Company	meta-Fluorobutyryl fentanyl (hydrochloride) (CRM); 100 μg/mL in Methanol.	Glass ampule: 1.0 mL	4/14/2021
Cayman Chemical Company	meta-Fluoroisobutyryl fentanyl (hydrochloride) (CRM); 100 μg/mL in Methanol.	Glass ampule: 1.0 mL	4/14/2021
Cayman Chemical Company	Methoxyacetyl fentanyl (hydrochloride) (CRM); 100 μg/mL in Methanol	Glass ampule: 1.0 mL	4/14/2021
Cayman Chemical Company	MMB-FUBINACA (CRM); 100 μg/mL in Methanol	Glass ampule: 1.0 mL	4/14/2021
Cayman Chemical Company	MT-45-d11 (hydrochloride) (CRM); 100 μg/mL in Methanol	Glass ampule: 1.0 mL	4/14/2021
Cayman Chemical Company	N-ethyl Pentylone (hydrochloride) (CRM); 100 μg/mL in Methanol	Glass ampule: 1.0 mL	4/14/2021
Cayman Chemical Company	Ocfentanil (hydrochloride) (CRM); 100 μg/mL in Methanol	Glass ampule: 1.0 mL	4/14/2021
Cayman Chemical Company	Ocfentanil-d5 (hydrochloride); 100 μg/mL in Methanol (CRM)	Glass ampule: 1.0 mL	4/14/2021
Cayman Chemical Company	ortho-Fluorobutyryl fentanyl (hydrochloride) (CRM); 100 μg/mL in Methanol.	Glass ampule: 1.0 mL	4/14/2021
Cayman Chemical Company	ortho-Fluoroisobutyryl fentanyl (hydrochloride) (CRM); 100 μg/mL in Methanol.	Glass ampule: 1.0 mL	4/14/2021
Cayman Chemical Company	para-Chloroisobutyryl fentanyl (hydrochloride) (CRM); 100 μg/mL in Methanol.	Glass ampule: 1.0 mL	4/14/2021
Cayman Chemical Company	para-Fluorobutyryl fentanyl (hydrochloride) (CRM); 100 μg/mL in Methanol.	Glass ampule: 1.0 mL	4/14/2021
Cayman Chemical Company	para-Fluorobutyryl fentanyl-13C6 (hydrochloride) (CRM); 100 μg/mL in Methanol.	Glass ampule: 1.0 mL	4/14/2021
Cayman Chemical Company	para-Fluorobutyryl fentanyl-d7 (hydrochloride) (CRM); 100 μg/mL in Methanol.	Glass ampule: 1.0 mL	4/14/2021
Cayman Chemical Company	para-Fluorofentanyl-d5 (hydrochloride) (CRM); 100 μg/mL in Methanol	Glass ampule: 1.0 mL	4/14/2021
Cayman Chemical Company	para-methoxy-Butyryl fentanyl (hydrochloride) (CRM); 100 μg/mL in Methanol.	Glass ampule: 1.0 mL	4/14/2021
Cayman Chemical Company	para-methoxy-Butyryl fentanyl-d7 (hydrochloride) (CRM); 100 μg/mL in Methanol.	Glass ampule: 1.0 mL	4/14/2021
Cayman Chemical Company	PV8 (hydrochloride) (CRM); 100 μg/mL in Methanol	Glass ampule: 1.0 mL	4/14/2021
Cayman Chemical Company	Tetrahydrofuran fentanyl (hydrochloride) (CRM); 100 μg/mL in Methanol	Glass ampule: 1.0 mL	4/14/2021
Cayman Chemical Company	Valeryl fentanyl (CRM); 100 μg/mL in Methanol	Glass ampule: 1.0 mL	4/14/2021
Cayman Chemical Company	Valeryl fentanyl-13C6 (CRM); 100 μg/mL in Methanol	Glass ampule: 1.0 mL	4/14/2021
Cayman Chemical Company	Valeryl fentanyl-d5 (CRM); 100 μg/mL in Methanol	Glass ampule: 1.0 mL	4/14/2021
Cayman Chemical Company	α-Ethylaminohexanophenone (hydrochloride) (CRM); 100 μg/mL in Methanol.	Glass ampule: 1.0 mL	4/14/2021
Cayman Chemical Company	α-Pyrrolidinohexanophenone (hydrochloride) (CRM); 100 μg/mL in Methanol.	Glass ampule: 1.0 mL	4/14/2021
Cerilliant Corporation	6-Acetylcodeine-D3	Glass ampule: 1.0 mL	4/15/2021
Cerilliant Corporation	Normorphine-D3	Glass ampule: 1.0 mL	4/15/2021
Cliniqa Corporation	TDM + MTX Control Level 1, Part: 43746	Bottle: 500 ml	4/27/2021
Cliniqa Corporation	TDM + MTX Control Level 1, Part: 83737	Vial: 5 ml	4/27/2021
Cliniqa Corporation	TDM + MTX Control Level 2, Part: 43747	Bottle: 500 ml	4/27/2021

CHART I—Continued

Supplier	Product name	Form	Application date
Cliniqa Corporation	TDM + MTX Control Level 2, Part: 83738	Vial: 5 ml	4/27/2021
Cliniqa Corporation	TDM + MTX Control Level 3, Part: 43747	Bottle: 500 ml	4/27/2021
Cliniqa Corporation	TDM + MTX Control Level 3, Part: 83739	Vial: 5 ml	4/27/2021
College of American Pathologists	2022 DMPM–01	HDPE bottle: 40 mL	4/19/2021
College of American Pathologists	2022 DMPM–02	HDPE bottle: 40 mL	4/19/2021
College of American Pathologists	2022 DMPM–03	HDPE bottle: 40 mL	4/19/2021
College of American Pathologists	2022 DMPM–05	HDPE bottle: 40 mL	4/19/2021
College of American Pathologists	2022 DMPM–06	HDPE bottle: 40 mL	4/19/2021
College of American Pathologists	2022 DMPM–07	HDPE bottle: 40 mL	4/19/2021
College of American Pathologists	2022 FTC–02	HDPE bottle: 20 mL	4/19/2021
College of American Pathologists	2022 FTC–03	HDPE bottle: 20 mL	4/19/2021
College of American Pathologists	2022 FTC–04	HDPE bottle: 20 mL	4/19/2021
College of American Pathologists	2022 FTC–05	HDPE bottle: 20 mL	4/19/2021
College of American Pathologists	2022 FTC–07	HDPE bottle: 20 mL	4/19/2021
College of American Pathologists	2022 FTC–08	HDPE bottle: 20 mL	4/19/2021
College of American Pathologists	2022 FTC–10	HDPE bottle: 20 mL	4/19/2021
College of American Pathologists	2022 FTC–12	HDPE bottle: 20 mL	4/19/2021
College of American Pathologists	2022 FTC–13	HDPE bottle: 20 mL	4/19/2021
College of American Pathologists	2022 FTC–14	HDPE bottle: 20 mL	4/19/2021
College of American Pathologists	2022 OFD–01	HDPE vial: 2 mL	4/19/2021
College of American Pathologists	2022 OFD–02	HDPE vial: 2 mL	4/19/2021
College of American Pathologists	2022 OFD–03	HDPE vial: 2 mL	4/19/2021
College of American Pathologists	2022 OFD–04	HDPE vial: 2 mL	4/19/2021
College of American Pathologists	2022 OFD–05	HDPE vial: 2 mL	4/19/2021
College of American Pathologists	2022 OFD–06	HDPE vial: 2 mL	4/19/2021
College of American Pathologists	2022 OFD–07	HDPE vial: 2 mL	4/19/2021
College of American Pathologists	2022 OFD–08	HDPE vial: 2 mL	4/19/2021
College of American Pathologists	2022 OFD–10	HDPE vial: 2 mL	4/19/2021
College of American Pathologists	2022 OFD–11	HDPE vial: 2 mL	4/19/2021
College of American Pathologists	2022 OFD–12	HDPE vial: 2 mL	4/19/2021
College of American Pathologists	2022 OFD–13	HDPE vial: 2 mL	4/19/2021
College of American Pathologists	2022 OFD–14	HDPE vial: 2 mL	4/19/2021
College of American Pathologists	2022 OFD–15	HDPE vial: 2 mL	4/19/2021
College of American Pathologists	2022 OFD–16	HDPE vial: 2 mL	4/19/2021
College of American Pathologists	2022 OFD–17	HDPE vial: 2 mL	4/19/2021
College of American Pathologists	2022 OFD–18	HDPE vial: 2 mL	4/19/2021
College of American Pathologists	2022 OFD–19	HDPE vial: 2 mL	4/19/2021
College of American Pathologists	2022 OFD–20	HDPE vial: 2 mL	4/19/2021
College of American Pathologists	2022 T–03	HDPE bottle: 20 mL	4/19/2021
College of American Pathologists	2022 T–04	HDPE bottle: 20 mL	4/19/2021
College of American Pathologists	2022 T–05	HDPE bottle: 20 mL	4/19/2021
College of American Pathologists	2022 T–07	HDPE bottle: 20 mL	4/19/2021
College of American Pathologists	2022 T–08	HDPE bottle: 20 mL	4/19/2021
College of American Pathologists	2022 T–09	HDPE bottle: 20 mL	4/19/2021
College of American Pathologists	2022 T–12	HDPE bottle: 20 mL	4/19/2021
College of American Pathologists	2022 T–13	HDPE bottle: 20 mL	4/19/2021
College of American Pathologists	2022 THCB–01	Glass vial: 10 mL	4/19/2021
College of American Pathologists	2022 THCB–02	Glass vial: 10 mL	4/19/2021
College of American Pathologists	2022 THCB–03	Glass vial: 10 mL	4/19/2021
College of American Pathologists	2022 THCB–04	Glass vial: 10 mL	4/19/2021
College of American Pathologists	2022 THCB–05	Glass vial: 10 mL	4/19/2021
College of American Pathologists	2022 THCB–06	Glass vial: 10 mL	4/19/2021
College of American Pathologists	2022 UDS–01	HDPE bottle: 10 mL	4/19/2021
College of American Pathologists	2022 UDS–02	HDPE bottle: 10 mL	4/19/2021
College of American Pathologists	2022 UDS–03	HDPE bottle: 10 mL	4/19/2021
College of American Pathologists	2022 UDS–04	HDPE bottle: 10 mL	4/19/2021
College of American Pathologists	2022 UDS–05	HDPE bottle: 10 mL	4/19/2021
College of American Pathologists	2022 UDS–06	HDPE bottle: 10 mL	4/19/2021
College of American Pathologists	2022 UDS–07	HDPE bottle: 10 mL	4/19/2021
College of American Pathologists	2022 UDS–08	HDPE bottle: 10 mL	4/19/2021
College of American Pathologists	2022 UDS–09	HDPE bottle: 10 mL	4/19/2021
College of American Pathologists	2022 UDS–10	HDPE bottle: 10 mL	4/19/2021
College of American Pathologists	2022 UDS–11	HDPE bottle: 10 mL	4/19/2021
College of American Pathologists	2022 UDS–12	HDPE bottle: 10 mL	4/19/2021
College of American Pathologists	2022 UDS–13	HDPE bottle: 10 mL	4/19/2021
College of American Pathologists	2022 UDS–14	HDPE bottle: 10 mL	4/19/2021
College of American Pathologists	2022 UDS–15	HDPE bottle: 10 mL	4/19/2021
College of American Pathologists	2022 UT–01	HDPE bottle: 50 mL	4/19/2021
College of American Pathologists	2022 UT–02	HDPE bottle: 50 mL	4/19/2021
College of American Pathologists	2022 UT–03	HDPE bottle: 50 mL	4/19/2021
College of American Pathologists	2022 UT–04	HDPE bottle: 50 mL	4/19/2021
College of American Pathologists	2022 UT–05	HDPE bottle: 50 mL	4/19/2021
College of American Pathologists	2022 UT–06	HDPE bottle: 50 mL	4/19/2021
College of American Pathologists	2022 UT–07	HDPE bottle: 50 mL	4/19/2021
College of American Pathologists	2022 UT–08	HDPE bottle: 50 mL	4/19/2021
College of American Pathologists	2022 UT–09	HDPE bottle: 50 mL	4/19/2021
College of American Pathologists	2022 UT–10	HDPE bottle: 50 mL	4/19/2021
College of American Pathologists	2022 UT–11	HDPE bottle: 50 mL	4/19/2021
College of American Pathologists	2022 UT–12	HDPE bottle: 50 mL	4/19/2021
College of American Pathologists	2022 UT–13	HDPE bottle: 50 mL	4/19/2021

CHART I—Continued

Supplier	Product name	Form	Application date
College of American Pathologists	2022 UT–14	HDPE bottle: 50 mL	4/19/2021
College of American Pathologists	2022 UT–15	HDPE bottle: 50 mL	4/19/2021
College of American Pathologists	2022 UTCO–01	HDPE bottle: 40 mL	4/19/2021
College of American Pathologists	2022 ZE–01	Glass vial: 5 mL	4/19/2021
College of American Pathologists	2022 ZE–02	Glass vial: 5 mL	4/19/2021
College of American Pathologists	2022 ZE–03	Glass vial: 5 mL	4/19/2021
College of American Pathologists	2022 ZE–04	Glass vial: 5 mL	4/19/2021
College of American Pathologists	2022 ZE–05	Glass vial: 5 mL	4/19/2021
College of American Pathologists	2022 ZE–06	Glass vial: 5 mL	4/19/2021
College of American Pathologists	2022FTC–01	HDPE bottle: 20 mL	4/19/2021
College of American Pathologists	2022–OFD–09	HDPE vial: 2 mL	4/19/2021
CPI International	(-)-delta9-tetrahydrocannabinol (d9-THC) 1000 mg/L, 1 mL	Amber ampule: 1 mL	4/7/2021
LGC—Dr. Ehrenstorfer	Custom (-)-delta9-tetrahydrocannabinol (d9-HC) 1000 μg/mL in acetonitrile.	Amber ampule: 1 mL	4/12/2021
LGC—Dr. Ehrenstorfer	Custom Pharmaceutical Mix 6509 100–10000 μg/mL in methanol	Amber ampule: 1 mL	6/8/2021
LGC—Dr. Ehrenstorfer	Custom Pharmaceutical Mix 6509 100–10000 μg/mL in methanol	1 kit: 5 ampules × 1 mL each	4/12/2021
LGC—Dr. Ehrenstorfer	Δ11-Tetrahydrocannabinol (Δ11-THC) 100 μg/mL in Methanol	Amber ampule: 1 mL	6/14/2021
LGC—Dr. Ehrenstorfer	Δ11-Tetrahydrocannabinol (Δ11-THC) 100 μg/mL in Methanol	Amber ampule: 1 mL	4/20/2021
LGC—Dr. Ehrenstorfer	Δ11-Tetrahydrocannabinol (Δ11-THC) 1000 μg/mL in Methanol	Amber ampule: 1 mL	6/14/2021
LGC—Dr. Ehrenstorfer	Δ11-Tetrahydrocannabinol (Δ11-THC) 1000 μg/mL in Methanol	Amber ampule: 1 mL	4/20/2021
LGC—Dr. Ehrenstorfer	Δ9-Tetrahydrocannabivarinic acid (THCVA) 100 μg/mL in Methanol	Amber ampule: 1 mL	6/8/2021
LGC—Dr. Ehrenstorfer	Δ9-Tetrahydrocannabivarinic acid (THCVA) 1000 μg/mL in Methanol	Amber ampule: 1 mL	6/8/2021
LGC—Dr. Ehrenstorfer	Boldenone cypionate 100 μg/mL in Acetonitrile	Amber ampule: 1 mL	5/4/2021
Lin-Zhi International	LZI Norfentanyl (Q) Qualitative Calibrator (5 ng/mL), Ref# C68815	Dropper bottle: 5 mL	6/9/2021
Lin-Zhi International	LZI Norfentanyl Level 1 Control (3.75 ng/mL), Ref# C68821	Dropper bottle: 5 mL	6/9/2021
Lin-Zhi International	LZI Norfentanyl Level 2 Control (6.25 ng/mL), Ref# C68822	Dropper bottle: 5 mL	6/9/2021
Lin-Zhi International	LZI Norfentanyl Qualitative Calibrator (5 ng/mL), Ref# C68810	Dropper bottle: 5 mL	6/9/2021
Lin-Zhi International	LZI Norfentanyl Semi-Quantitative Calibrator Set, Ref# C68811	Kit: 4 dropper bottles; 15 mL each	6/9/2021
Lin-Zhi International	Norbuprenorphine DAU Calibrator, Norbuprcnorphinc, Intermediate Calibrator #2 (40 ng/mL), Ref# A68829.	Dropper bottle: 5 mL	6/9/2021
Lin-Zhi International	Norbuprenorphine DAU Calibrator, Norbuprenorphine Level 2 Control (13 ng/mL), Ref# A68825.	Dropper bottle: 5 mL	6/9/2021
Lin-Zhi International	Norbuprenorphine DAU Calibrator, Norbuprenorphine Low Calibrator (5 ng/mL), Ref# A68826.	Dropper bottle: 5 mL	6/9/2021
Lin-Zhi International	Norbuprenorphine DAU Calibrator, Norbuprenorphine, Cutoff Calibrator (10 ng/mL), Ref# A68827.	Dropper bottle: 5 mL	6/9/2021
Lin-Zhi International	Norbuprenorphine DAU Calibrator, Norbuprenorphine, High Calibrator (100 ng/mL), Ref# A68830.	Dropper bottle: 5 mL	6/9/2021
Lin-Zhi International	Norbuprenorphine DAU Calibrator, Norbuprenorphine, Intermediate Calibrator #1 (20 ng/mL), Ref# A68828.	Dropper bottle: 5 mL	6/9/2021
Lin-Zhi International	Norbuprenorphine DAU Calibrator, Norbuprenorphine, Level 1 Control (7 ng/mL), Ref# A68824.	Dropper bottle: 5 mL	6/9/2021
Microgenics Corporation	Alinity c Benzodiazepines Qual Calibrator Kit, Catalog Number: 10027281/09P5201.	Kit: 1 vial, 2.9 mL	4/2/2021
Microgenics Corporation	Alinity c Cannabinoids Control 1 Kit, Catalog Number: 10024827/09P5410.	Kit: 2 LDPE, 5 mL each	4/2/2021
Microgenics Corporation	Alinity c Cannabinoids Control 2 Kit, Catalog Number: 10027212/09P5411.	Kit: 1 LDPE, 5 mL	4/2/2021
Microgenics Corporation	Alinity c Cannabinoids Qual Calibrator, Catalog Number: 10024821/09P5401.	Kit: 1 vial, 3.0 mL	4/2/2021
Microgenics Corporation	Alinity c Cannabinoids SemiQuant 100 Calibrator Kit, Catalog Number: 10026530/09P5402.	Kit: 3 vials, 3 mL each	4/2/2021
Microgenics Corporation	Alinity c Cannabinoids SemiQuant 200 Calibrator Kit, Catalog Number: 10026531/09P5403.	Kit: 3 vials, 3 mL each	4/2/2021
Microgenics Corporation	Alinity c Ecstasy Qual Calibrator Kit, Catalog Number: 10024822/09P5801.	Kit: 1 vial, 3.0 mL	4/2/2021
Microgenics Corporation	Alinity c Ecstasy Semiquant Calibrator Kit, Catalog Number: 10026532/09P5802.	Kit: 4 vials, 3.0 mL each	4/2/2021
Microgenics Corporation	Alinity c Opiates Qual Calibrator Kit, Catalog Number: 10024823/09P6501.	Kit: 1 vial, 3.0 mL	4/2/2021
Microgenics Corporation	Alinity c Opiates Semiquant Calibrator Kit, Catalog Number: 10026534/09P6502.	Kit: 4 vials, 3 mL each	4/2/2021
o2si Smart Solutions	Codeine monohydrate as codeine Solution, 2,000 mg/L—Parent Stock Solution—Not For Sale.	Glass cryule: 2 mL	5/28/2021
o2si Smart Solutions	Heroin Solution, 2,000 mg/L—Parent Stock Solution—Not For Sale	Glass cryule: 2 mL	5/28/2021
o2si Smart Solutions	Hydrocodone (+)-bitartrate salt as hydrocodone Solution, 2,000 mg/L—Parent Stock Solution—Not For Sale.	Glass cryule: 2 mL	5/28/2021
o2si smart solutions	ISO 17034—Custom Toxin/Poison Standard Kit, 45–46, 100 mg/L, 1 × 1 ml of Each Level (G34–140319–01, G34–140339–01, G34–140340–01).	Kit: 2 amber ampules, 1 mL each	5/28/2021
o2si smart solutions	ISO 17034 Custom Toxin/Poison Stock Standard Mix, 10–318, 100 mg/L, 1 mL.	Amber ampule: 1 mL	5/28/2021
o2si smart solutions	ISO 17034 Custom Toxin/Poison Stock Standard Mix, 10–319, 100 mg/L, 1 mL.	Amber ampule: 1 mL	5/28/2021
o2si smart solutions	ISO 17034 Custom Toxin/Poison Stock Standard Mix, 34–318, 100 mg/L, 1 mL.	Amber ampule: 1 mL	5/27/2021
o2si Smart Solutions	ISO 17034 Custom Toxin/Poison Stock Standard Mix, 34–318, 100 mg/L, 1 mL.	Amber ampule: 1 mL	4/26/2021
o2si smart solutions	Levorphanol (+)-tartrate salt dehydrate as levorphanol Solution, 2,000 mg/L—Parent Stock Solution—Not For Sale.	Glass cryule: 2 mL	5/28/2021

CHART I—Continued

Supplier	Product name	Form	Application date
o2si Smart Solutions	Oxycodone Solution, 2,000 mg/L—Parent Stock Solution—Not For Sale	Glass cryule: 2 mL	5/28/2021
o2si Smart Solutions	Pentazocine Solution, 2,000 mg/L—Parent Stock Solution	Glass cryule: 2 mL	5/28/2021
Restek Corporation	Custom D-Methamphetamine Standard	Glass Ampule: 1.3 mL	4/15/2021
UTAK Laboratories, Inc	DAU High Cutoff 1 Urine Control	Kit: 4 bottles, 10 mL each	4/16/2021
UTAK Laboratories, Inc	DAU High Cutoff 2 Urine Control	Kit: 4 bottles, 10 mL each	4/16/2021
UTAK Laboratories, Inc	DAU Low Cutoff 1 Urine Control	Kit: 4 bottles, 10 mL each	4/16/2021
UTAK Laboratories, Inc	DAU Low Cutoff 2 Urine Control	Kit: 4 bottles, 10 mL each	4/16/2021
UTAK Laboratories, Inc	Drugs of Abuse Level 1 Whole Blood Control	Kit: 5 bottles, 5 mL each	4/16/2021
UTAK Laboratories, Inc	Fentanyl Analogues 2 NG/ML Whole Blood Control	Kit: 5 bottles, 3 mL each	4/16/2021
UTAK Laboratories, Inc	Fentanyl Analogues 5 NG/ML Urine Control	Kit: 5 bottles, 3 mL each	4/16/2021
UTAK Laboratories, Inc	PM 100 Urine Control	Kit: 5 bottles, 5 mL each	4/16/2021
UTAK Laboratories, Inc	PM 100 Whole Blood Control	Kit: 5 bottles, 5 mL each	4/16/2021
UTAK Laboratories, Inc	PM Plus High Urine Control	Kit: 5 bottles, 5 mL each	4/16/2021
UTAK Laboratories, Inc	PM Plus Low Urine Control	Kit: 5 bottles, 5 mL each	4/16/2021
UTAK Laboratories, Inc	SAMHSA Confirm Level 1 SMX Oral Fluid Control	Kit: 5 bottles, 3 mL each	4/16/2021
UTAK Laboratories, Inc	SAMHSA Confirm Level 2 SMX Oral Fluid Control	Kit: 5 bottles, 3 mL each	4/16/2021

The Assistant Administrator has found that each of the compounds, mixtures, and preparations described in Chart II below is not consistent with the criteria stated in 21 U.S.C. 811(g)(3)(B) and in 21 CFR 1308.23. Accordingly, the Assistant Administrator has determined that the chemical preparations or mixtures generally described in Chart II below and specifically described in the application materials received by DEA, are not exempt from application of any part of the CSA or from application of any part of the CFR, with regard to the requested exemption pursuant to 21 CFR 1308.23, as of the date that was provided in the determination letters to the individual requesters.

CHART II

Supplier	Product name	Form	Application date
Aalto Scientific, Ltd	Immunoassy Base (Level A–E)	Glass vial, bottle, or flask: 500 mL–1L.	4/1/2021
Aalto Scientific, Ltd	Immunoassy Base (Level A–E)	Glass vial, bottle, or flask: 100mL–500 mL.	4/1/2021
Aalto Scientific, Ltd	Immunoassy Base (Level A–E)	Glass vial, bottle, or flask: 100 mL	4/1/2021

Opportunity for Comment

Pursuant to 21 CFR 1308.23(e), any interested person may submit written comments on or objections to any chemical preparation in this order that has been approved or denied as exempt. If any comments or objections raise significant issues regarding any finding of fact or conclusion of law upon which this order is based, the Assistant Administrator will immediately suspend the effectiveness of any applicable part of this order until he may reconsider the application in light of the comments and objections filed. Thereafter, the Assistant Administrator shall reinstate, revoke, or amend his original order as he determines appropriate.

Approved Exempt Chemical Preparations Are Posted on the DEA's Website

A list of all current exemptions, including those listed in this order, is available on the DEA's website at *http://www.DEAdiversion.usdoj.gov/schedules/exempt/exempt_chemlist.pdf.* The dates of applications of all current exemptions are posted for easy reference.

* * * * *

Brian S. Besser,

Acting Assistant Administrator.

[FR Doc. 2022–01125 Filed 1–20–22; 8:45 am]

BILLING CODE 4410–09–P

DEPARTMENT OF JUSTICE

Drug Enforcement Administration

Daniel R. Nevarre, M.D.; Decision and Order

On June 7, 2021, a former Assistant Administrator, Diversion Control Division, Drug Enforcement Administration (hereinafter, DEA or Government), issued an Order to Show Cause to Daniel R. Nevarre, M.D., (hereinafter, Applicant), of South Jordan, Utah. Order to Show Cause (hereinafter, OSC), at 1. The OSC proposed the denial of Applicant's application No. H21079595C for a DEA Certificate of Registration, because the United States Department of Health and Human Services, Office of Inspector General (hereinafter, HHS/OIG) mandatorily excluded Applicant from participation in Medicare, Medicaid, and all Federal health care programs for a minimum period of 10 years pursuant to 42 U.S.C. 1320a–7(a); and such exclusion ''warrants denial of [Applicant's] application for DEA registration pursuant to 21 U.S.C. 824(a)(5).'' *Id.* at 2. The OSC also alleged that Applicant's application ''contains material false statements'' and thus forms an independent ground for denial. *Id.* at 2 (citing 21 U.S.C. 824(a)(1)).

The OSC alleged that on May 25, 2018, Applicant ''pled guilty to one count of medical assistance fraud in violation of 62 P.S. § 1407(a)(1), and to one count of insurance fraud, in violation of 18 Pa.C.S. § 4117(a)(2).'' *Id.* at 1–2 (citing *Commonwealth of Pa.* v. *Daniel Raymond Nevarre,* No. CP–11–CR–0000717–2018 (Pa. Ct. Comm. Pl. May 25, 2018)). The OSC further alleged that, based on such conviction, HHS/OIG ''mandatorily excluded [Applicant] from participation in Medicare, Medicaid, and all Federal health care programs'' for a minimum period of 10 years pursuant to 42 U.S.C. 1320a–7(a), effective November 20, 2018. *Id.* The OSC therefore proposed denial of Applicant's application based on 21 U.S.C. 824(a)(5).

The OSC also proposed denial of Applicant's application based on 21 U.S.C. 824(a)(1), because Applicant responded ''no'' to Liability Question 1 on his DEA application, which asks whether Applicant has ever been excluded from participation in a medicare program. *Id.* The OSC therefore proposed denial of Applicant's application because his ''failure to disclose [his] exclusion from Medicare constitutes material falsification of [his] application for a DEA [registration].'' *Id.*

The Show Cause Order notified Applicant of the right to request a hearing on the allegations or to submit a written statement, while waiving the right to a hearing, the procedures for electing each option, and the consequences for failing to elect either option. *Id.* at 2–3 (citing 21 CFR 1301.43). The OSC also notified Applicant of the opportunity to submit a corrective action plan. OSC, at 3 (citing 21 U.S.C. 824(c)(2)(C)).

Adequacy of Service

In a signed and sworn Declaration, a Diversion Investigator (hereinafter, DI 2) assigned to the Pittsburg District Office, Philadelphia Field Division, stated that, on June 21, 2021, after receiving a request from the Salt Lake City District Office to assist with service of the OSC, he and a Narcotics Agent from the Pennsylvania Office of the Attorney General traveled to Applicant's residential address in Johnstown, Pennsylvania, where he ''personally served [the Applicant] with a copy of the [OSC].'' Request for Final Agency Action, dated November 9, 2021 (hereinafter, RFAA), Exhibit (hereinafter, RFAAX) 3 (DI 2 Declaration), at 1–2.

The Government forwarded its RFAA, along with the evidentiary record, to this office on November 9, 2021. In its RFAA, the Government represents that ''neither [Applicant] nor any attorney representing [Applicant] has requested a hearing'' or filed a written statement. RFAA, at 2; *see also* RFAAX 3, at 2 & RFAAX 1, at 4. The Government requests ''Final Agency Action denying the Application on the grounds that [Applicant] materially falsified his Application and has been excluded from participation in Medicare, Medicaid, and all Federal health care programs pursuant to 42 U.S.C. 1320a–7(a).'' *Id.*

Based on the DI's Declaration, the Government's written representations, and my review of the record, I find that the Government accomplished service of the OSC on Applicant on June 21, 2021. I also find that more than thirty days have now passed since the Government accomplished service of the OSC. Further, based on the Government's written representations, I find that neither Applicant, nor anyone purporting to represent the Applicant, requested a hearing, submitted a written statement while waiving Applicant's right to a hearing, or submitted a corrective action plan. Accordingly, I find that Applicant has waived the right to a hearing and the right to submit a written statement and corrective action plan. 21 CFR 1301.43(d) and 21 U.S.C. 824(c)(2)(C). I, therefore, issue this Decision and Order based on the record submitted by the Government, which constitutes the entire record before me. 21 CFR 1301.43(e).

A. Findings of Fact

1. Applicant's DEA Application and Former Registrations

On February 1, 2021, DEA received an application from Applicant for a DEA Certificate of Registration as a practitioner in Schedules IIN [1] through V with a proposed registered address of 881 Baxter Drive, Suite 100, South Jordan, Utah 84095. RFAAX 1 (DI 1 Declaration) (Appendix, hereinafter, App.) 1 (Applicant's Application). Applicant's application was assigned Control No. H21079595C. RFAAX 1, at 1.

DI 1 submitted a Declaration, dated September 13, 2021, which stated that Applicant had previously surrendered for cause DEA Certificates of Registration numbered FN7029487 and BN5130290 on September 5, 2018, and October 15, 2018, respectively, after losing his state authority to practice medicine in Pennsylvania. RFAAX 1 (DI 1 Declaration) at 2. DI 1 further stated that Applicant's third previous DEA Certificate of Registration numbered FN5716420 in New York expired on October 31, 2018. *Id.* at 2–3.

2. Applicant's Exclusion (21 U.S.C. 824(a)(5))

The Government's uncontroverted evidence demonstrates that Applicant pled guilty to false information/claims and insurance fraud on or about May 25, 2018, in the Court of County Pleas in Cambria County, Pennsylvania. RFAAX 1, at App. C (Applicant's Guilty plea). In a letter from the HHS/OIG, dated October 31, 2018, HHS excluded Applicant from Medicare, Medicaid, and all federal health care programs under 42 U.S.C. 1320a–7(a) for a minimum period 10 years based on Applicant's conviction. RFAAX 1, App. E (hereinafter, HHS Exclusion), at 1. The HHS Exclusion stated that the exclusion would become effective twenty days from the date of the letter. *Id.* at 1.

Accordingly, I find clear, unequivocal, and convincing record evidence that HHS excluded Applicant from Medicare, Medicaid, and all federal health care programs under 42 U.S.C. 1320a–7(a) for a minimum of 10 years, effective November 20, 2018.

3. Material Falsification of Applicant's Application (21 U.S.C. 824(a)(1))

I find clear, unequivocal, and convincing record evidence that Applicant answered ''N'' to the first Liability question on the registration renewal application that was received by DEA on or about February 1, 2021. RFAAX 1, App. 1, at 2. I find clear, unequivocal, and convincing record evidence that the text of the first Liability question on the registration renewal application that Applicant submitted on or about February 1, 2021, asked whether Applicant had ''ever been . . . excluded or directed to be excluded from participation in a medicare or state health care program, or is any such action pending.'' [2] *Id.* Accordingly, I find clear, unequivocal, and convincing record evidence that Applicant's ''N'' response to the first Liability question on his application that he submitted on or about February 1, 2021, was false, because the record evidence clearly establishes that on October 31, 2018, Applicant was excluded from Medicare, Medicaid and all federal healthcare programs by HHS. *See* RFAAX 1, App. E.

B. Discussion

In its OSC, the Government relied upon grounds Congress provided to support revocation/suspension, not denial of an application. Prior Agency decisions have addressed whether it is appropriate to consider a provision of 21 U.S.C. 824(a) when determining whether or not to grant a practitioner registration application. For over forty-five years, Agency decisions have concluded that it is. *Robert Wayne Locklear, M.D.,* 86 FR 33,738 33,744–45 (2021) (collecting cases); *see also, William Ralph Kincaid, M.D.,* 86 FR 40,636, 40,641 (2021). A provision of section 824 may be the basis for the denial of a practitioner registration application and allegations related to section 823 remain relevant to the adjudication of a practitioner

[1] Applicant only applied for schedule II non-narcotic (IIN).

[2] Although Applicant submitted evidence in his application related to his conviction and the circumstances of his surrender for cause of his previous DEA registrations, he did not include any discernable information on the HHS/OIG exclusion. RFAAX 1, App. 1 (Application).

registration application when a provision of section 824 is involved. *See Robert Wayne Locklear, M.D.,* 86 FR at 33,744–45.

Accordingly, when considering an application for a registration, I will consider any actionable allegations related to the grounds for denial of an application under 823 and will also consider any allegations that the applicant meets one or more of the five grounds for revocation or suspension of a registration under section 824. *Id. See also Dinorah Drug Store, Inc.,* 61 FR 15,972, 15,973–74 (1996).

1. 21 U.S.C. 823(f): The Five Public Interest Factors

Pursuant to section 303(f) of the Controlled Substances Act (hereinafter, the CSA), ''[t]he Attorney General shall register practitioners . . . to dispense . . . controlled substances . . . if the applicant is authorized to dispense . . . controlled substances under the laws of the State in which he practices.'' 21 U.S.C. 823(f). Section 303(f) further provides that an application for a practitioner's registration may be denied upon a determination that ''the issuance of such registration . . . would be inconsistent with the public interest.'' *Id.*

In this case, there is no indication that Applicant does not hold a valid state medical license or is not authorized to dispense controlled substances in the State of Utah, where he has applied for a registration.

Because the Government has not alleged that Applicant's registration is inconsistent with the public interest under section 823, and although I have considered 823, I will not analyze Applicant's application under the public interest factors. Therefore, in accordance with prior agency decisions, I will move to assess whether the Government has proven by substantial evidence that a ground for revocation exists under 21 U.S.C. 824(a). *Supra* B.

2. 21 U.S.C. 824(a)(5): Mandatory Exclusion From Federal Health Care Programs Pursuant to 42 U.S.C. 1320a–7(a)

Under Section 824(a) of the CSA, a registration ''may be suspended or revoked'' upon a finding of one or more of five grounds. 21 U.S.C. 824. The ground in 21 U.S.C. 824(a)(5) requires that the registrant ''has been excluded (or directed to be excluded) from participation in a program pursuant to section 1320a–7(a) of Title 42.'' *Id.* Here, the undisputed record evidence demonstrates that HHS mandatorily excluded Applicant from federal health care programs. RFAAX 6. Accordingly, I will sustain the Government's allegation that Applicant has been excluded from participation in a program pursuant to section 1320a–7(a) of Title 42 and find that the Government has established that a ground for revocation exists pursuant to 21 U.S.C. 824(a)(5).[3] Although the language of 21 U.S.C. 824(a)(5) discusses suspension and revocation of a registration, for the reasons discussed above, it may also serve as the basis for the denial of a DEA registration application. *See Dinorah Drug Store, Inc.,* 61 FR at 15,973 (interpreting 21 U.S.C. 824(a)(5) to serve as a basis for the denial of an application for registration because it ''makes little sense . . . to grant the application for registration, only to possibly turn around and propose to revoke or suspend that registration based on the registrant's exclusion from a Medicare program''). Applicant's exclusion from participation in a program under 42 U.S.C. 1320a–7(a), therefore, serves as an independent basis for denying his application for DEA registration.

3. 21 U.S.C. 824(a)(1): Material Falsification

As already discussed, I find clear, unequivocal, and convincing evidence that Applicant submitted a registration application containing a false answer to the first Liability question. *Supra* section A.3. Applicant's false submission implicated Applicant's ''exclu[sion] . . . from participation in a program pursuant to section 1320a–7(a) of Title 42.'' 21 U.S.C. 824(a)(5). As a result, Applicant's false response to the first Liability question directly implicated my analysis related to the CSA's statutory grounds for revocation of a controlled substances registration, which as explained in *supra* B.1 and B.2, the agency has consistently interpreted to be equally relevant to its assessment of an application for a controlled substances registration. *See Robert Wayne Locklear, M.D.,* 86 FR at 33,744–45 (collecting cases). Therefore, Applicant's false submission affected my decision by depriving me of legally relevant facts when I evaluated Applicant's registration application. RFAAX 2, at 1; *see also Frank Joseph Stirlacci, M.D.,* 85 FR 45,229, 45,235 (2020). Accordingly, I find, based on the CSA, agency decisions, and the analysis underlying multiple Supreme Court decisions explaining ''materiality,'' that the falsity Applicant submitted was material. *Frank Joseph Stirlacci, M.D.,* 85 FR at 45,235.

I find that there is clear, convincing, and unequivocal evidence in the record supporting denial of Applicant's application based on his having ''materially falsified any application filed pursuant to or required by this subchapter or subchapter II.'' 21 U.S.C. 824(a)(1).[4]

4. Summary of Government's Prima Facie Case

Where, in section 824(a)(5) cases, the applicant offers no mitigating evidence upon which the Administrator can analyze the facts, the agency has consistently held that revocation/suspension/denial is warranted. *See, e.g., Sassan Bassiri, D.D.S.,* 82 FR 32,200, 32,201 (2017); *Richard Hauser, M.D.,* 83 FR 26,308, 26,310 (2018) (revocation was sought under Section 824(a)(5) and the registrant's certificate of registration was revoked ''based on the unchallenged basis for his mandatory exclusion''). Additionally, in this case, there is evidence on the record that Applicant materially falsified his application. When the basis for revocation/suspension/denial is clear and the registrant/applicant has had notice and the opportunity to present evidence, whether in a hearing or a written statement in accordance with 21 CFR 1301.43, but has chosen not to present any such evidence that could inform the Administrator's decision, it is reasonable that the Administrator should revoke or suspend, or deny. *See KK Pharmacy,* 64 FR 49,507, 49,510 (1999); *Orlando Ortega-Ortiz, M.D.* 70 FR 15,122 (2005); *Lazaro Guerra,* 68 FR 15,266 (2003) (basis for revocation was both (a)(3) and (a)(5)).

Accordingly, I find that there is clear, convincing, and unequivocal evidence in the record supporting denial of Applicant's application based on his exclusion from federal health care programs. 21 U.S.C. 824(a)(5). I further

[3] It is noted that this Agency has concluded repeatedly that the underlying crime requiring exclusion from federal health care programs under Section 1320a–7(a) of Title 42 does not require a nexus to controlled substances in order to be used as a ground for revocation or suspension of a registration or denial of an application. *Narciso Reyes, M.D.,* 83 FR 61,678, 61,681 (2018); *KK Pharmacy,* 64 FR at 49,510 (collecting cases); *Melvin N. Seglin, M.D.,* 63 Red. Reg. 70,431, 70,433 (1998); *Stanley Dubin, D.D.S.,* 61 FR 60,727, 60,728 (1996). In this case, the HHS ALJ applied aggravating factors to extend Applicant's exclusion period due to circumstances such as, the amount of restitution ($288,900) and the length of the criminal activity, which continued over a period of approximately seven years. RFAAX 1, App. E, at 3. Applicant's extensive unlawful activity over the course of seven years and his falsification on his application demonstrate a serious lack of honesty such that I cannot entrust him with a controlled substances registration.

[4] *See supra* B.1 finding that a ground for revocation can serve as a basis for denial of an application.

find that there is clear, convincing, and unequivocal evidence in the record supporting denial of Applicant's application based on his material falsification of his application. 21 U.S.C. 824(a)(1).

C. Sanction

Here, there is no dispute in the record that Applicant is mandatorily excluded pursuant to Section 1320a–7(a) of Title 42, and, further that Applicant materially falsified his application for a controlled substance registration, and therefore, that grounds for the denial of Applicant's application exist. Where, as here, the Government has met its *prima facie* burden of showing that grounds for denial exist, the burden shifts to the Applicant to show why he can be entrusted with a registration. *Garrett Howard Smith, M.D.,* 83 FR 18,882, 18,910 (2018) (collecting cases).

In this case, Applicant failed to respond to the Government's Order to Show Cause and did not avail himself of the opportunity to refute the Government's case. *See* RFAA, at 2. Therefore, Applicant has not provided any remorse or assurances that he would implement remedial measures to ensure such conduct is not repeated. Such silence weighs against the Applicant's registration. *Zvi H. Perper, M.D.,* 77 FR at 64,142, citing *Medicine Shoppe,* 73 FR at 387; *see also Samuel S. Jackson,* 72 FR at 23,853. Further, due to the lack of a statement or testimony from Applicant, it is unclear whether Applicant can be entrusted with a DEA registration; and therefore, I find that sanction is appropriate to protect the public from a recurrence of Applicant's unlawful actions in the context of his CSA registration. *See Leo R. Miller, M.D.,* 53 FR 21,931, 21,932 (1988).

Consequently, I find that the factors weigh in favor of sanction and I shall order the sanctions the Government requested, as contained in the Order below.

Order

Pursuant to 28 CFR 0.100(b) and the authority vested in me by 21 U.S.C. 823(f) and 21 U.S.C. 824(a), I hereby deny the pending application for a Certificate of Registration, Control Number H21079595C, submitted by Daniel R. Nevarre, M.D., as well as any other pending application of Daniel R. Nevarre, M.D. for additional registration in Utah. This Order is effective [insert Date Thirty Days From the Date of Publication in the **Federal Register**].

Anne Milgram,

Administrator.

[FR Doc. 2022–01112 Filed 1–20–22; 8:45 am]

BILLING CODE 4410–09–P

DEPARTMENT OF JUSTICE

Drug Enforcement Administration

[Docket No. 21–5]

Stephen E. Owusu, D.P.M.; Decision and Order

On October 22, 2020, a former Assistant Administrator, Diversion Control Division, of the Drug Enforcement Administration (hereinafter, DEA or Government), issued an Order to Show Cause (hereinafter, OSC) to Stephen E. Owusu, D.P.M. (hereinafter, Respondent) of Brooklyn, New York. Administrative Law Judge Exhibit (hereinafter, ALJX) 1 (OSC), at 1. The OSC proposed the denial of Respondent's application for DEA Certificate of Registration No. W19061136C (hereinafter, COR or registration) and the denial of any applications for any other DEA registrations pursuant to 21 U.S.C. 824(a)(2) and 824(a)(5) because Respondent was convicted of a felony related to controlled substances and because Respondent has been excluded from participation in Medicare, Medicaid, and all federal health care programs pursuant to 42 U.S.C. 1320a–7(a). *Id.*

On November 23, 2020, the Respondent timely requested a hearing, which commenced (and ended) on February 17, 2021, at the DEA Hearing Facility in Arlington, Virginia with the parties, counsel, and witnesses participating via video teleconference (VTC). On April 9, 2021, Administrative Law Judge Teresa A. Wallbaum (hereinafter, the ALJ) issued her Recommended Rulings, Findings of Fact, Conclusions of Law, and Decision of the Administrative Law Judge (hereinafter, Recommended Decision or RD). By letter dated May 4, 2021, the ALJ certified and transmitted the record to me for final Agency action. In the letter, the ALJ advised that neither party filed exceptions. Having reviewed the entire record, I adopt the ALJ's rulings, findings of fact, as modified, conclusions of law and recommended sanction with minor modifications, where noted herein.*[A]

*[A] I have made minor modifications to the RD. I have substituted initials or titles for the names of witnesses and patients to protect their privacy and I have made minor, nonsubstantive, grammatical changes and nonsubstantive, conforming edits. Where I have made substantive changes, omitted language for brevity or relevance, or where I have added to or modified the ALJ's opinion, I have noted the edits with an asterisk, and I have included specific descriptions of the modifications in brackets following the asterisk or in footnotes marked with a letter and an asterisk. Within those brackets and footnotes, the use of the personal pronoun ''I'' refers to myself—the Administrator.

Recommended Rulings, Findings of Fact, Conclusions of Law, and Decision of the Administrative Law Judge

Teresa A. Wallbaum; Administrative Law Judge

April 9, 2021

*[B] Respondent proceeded *pro se* throughout the entire case.[1] Respondent timely filed a Request for Hearing. A Prehearing Conference was conducted on January 12, 2021, via VTC. [2]A hearing on the merits of the OSC allegations was conducted on February 17, 2021, via VTC at the DEA Hearing Facility in Arlington, Virginia. The Government filed a Post-Hearing Brief on March 26, 2021.

The issue to be ultimately decided by the Acting Administrator, with the assistance of this Recommended Decision, is whether Respondent's application should be denied based

*[B] I have omitted a section of the RD's discussion of the procedural history to avoid repetition with my introduction.

[1] Respondent was advised during the Prehearing Conference that, under 21 CFR 1316.50, he had the right to seek representation by a qualified attorney at his own expense. Respondent was also advised that, if he continued to represent himself, he would be held to the same standards and procedural requirements of an attorney, including adherence to the procedural orders and rulings of this tribunal and to the procedural rules set forth in 21 CFR 1316.41–1316.68. ALJ Ex. 13 at 2, n.3. During the merits hearing, Respondent acknowledged that he had been so advised and confirmed that he wanted to proceed *pro se.* Tr. 7–8.

[2] Respondent failed to submit a Prehearing Statement by the December 29, 2020, deadline set out in this tribunal's Order for Prehearing Statements. ALJ Ex. 3. The tribunal then issued an Order Directing Compliance, which gave Respondent until January 4, 2021, to show good cause as to why he did not comply with the Order for Prehearing Statements. ALJ Ex. 7. Respondent then filed a Prehearing Statement on January 4, 2021, but did not offer any attempt to show good cause for his late filing. ALJ Ex. 8. The tribunal issued a Second Order Directing Compliance on January 4, 2021, requiring Respondent to show good cause. ALJ Ex. 9. Respondent then filed a document styled ''Requisite Good Cause for Late Filing,'' in which he purported to show good cause. ALJ Ex. 10. Thereafter, the tribunal issued an Order Regarding Respondent's Late Filed Prehearing Statement, which set out several of Respondent's failures to comply with the Order for Prehearing Statements, including late filings and at least two failures to serve pleadings on opposing counsel. ALJ Ex. 11. The Order also directed Respondent to file a Prehearing Statement in compliance with the Order for Prehearing Statements by January 11, 2021. *Id.* Respondent finally did file a compliant Prehearing Statement on January 10, 2021. ALJ Ex. 12.

upon his felony conviction related to controlled substances and/or his exclusion from participation in a federal health care program pursuant to 42 U.S.C. 1320a–7(a).

After carefully considering the testimony elicited at the hearing, the admitted exhibits, the arguments of counsel, and the record as a whole, I have set forth my recommended findings of fact and conclusions of law below.[3]

I. Findings of Fact

A. Allegations

The Government alleges that the denial of Respondent's application is supported by incontrovertible record evidence that he has been both convicted of a felony related to controlled substances and excluded from participation in a federal health care program. ALJ Ex. 1. The Government further alleges that judgment was entered against Respondent in the United States District Court for the Eastern District of New York after pleading guilty to one count of Conspiracy to Distribute Oxycodone, a Class C Felony, in violation of 21 U.S.C. 841(a), (b)(1)(C), and 846.[4] The Government also alleges that the U.S. Department of Health and Human Services, Office of Inspector General (HHS/OIG) mandatorily excluded Respondent from participation in Medicare, Medicaid, and all federal health care programs pursuant to 42 U.S.C. 1320a–7(a).[5] According to the Government, this exclusion was effective as of October 19, 2017, and runs for a period of five years.[6] ALJ Ex. 1.

B. Stipulations

The following stipulations were mutually agreed upon by the parties and are conclusively accepted as fact in these proceedings:

1. On or about June 12, 2019, Respondent filed with the DEA an application for registration as a practitioner in Schedules II through V pursuant to DEA control number W19061136C, with a proposed registered address of 106 Pennsylvania Ave., Suite 1, Brooklyn, NY 11207–2427.

2. On or about July 19, 2011, Respondent surrendered for cause his previous DEA registration, No. BO3613331.

3. On June 13, 2017, Judgment was entered against Respondent in the United States District Court for the Eastern District of New York after Respondent pleaded guilty to one count of ''Conspiracy to Distribute Oxycodone, a Class C Felony,'' in violation of 21 U.S.C. 841(a), (b)(1)(C), and 846. *United States* v. *Stephen Owusu,* No. 2:11–CR–0709–001 (LDW) (E.D.N.Y. June 13, 2017).

4. Based on Respondent's conviction, the New York State Office of the Medicaid Inspector General excluded Respondent from participation in the New York Medicaid program. The exclusion was effective August 30, 2017.

5. Based on Respondent's conviction, the U.S. Department of Health and Human Services, Office of Inspector General (HHS/OIG), mandatorily excluded Respondent from participation in Medicare, Medicaid, and all federal health care programs pursuant to 42 U.S.C. 1320a–7(a). The exclusion was effective on October 19, 2017, and runs for a period of five years.

6. Reinstatement of eligibility to participate in Medicare, Medicaid, and all federal health care programs after exclusion by HHS/OIG is not automatic.

7. Respondent is currently excluded from participation in Medicare, Medicaid, and all federal health care programs.

C. Government's Case-in-Chief

The Government's case-in-chief consisted of the testimony of a single witness, a DEA Diversion Group Supervisor (hereinafter, the GS). The GS testified that her duty station is the New York Field Division, located in New York City, where she has served in her capacity as a group supervisor for approximately one year. Tr. 21–22. Before the GS was promoted to group supervisor, she worked as a Diversion Investigator for approximately 24 Years. Tr. 22. In her position as a group supervisor, the GS is required to undergo periodic training as a part of her duties. Tr. 23. Further, she has been involved in over 200 DEA investigations throughout her career. *Id.*

Respondent came to the attention of the GS when she was assigned his application for DEA registration. Tr. 24. The GS also testified that she interviewed Respondent on two occasions. *Id.* Through the testimony of the GS, the Government laid the foundation for the introduction of multiple exhibits in support of its allegations.[7]

The parties agree, and the evidence demonstrates, that, on June 13, 2017, Respondent pleaded guilty to one count of Conspiracy to Distribute Oxycodone, a Class C Felony, in violation of 21 U.S.C. 841(a), (b)(1)(C), and 846. Gov. Ex. 5, 6.[8] The Department of Health and Human Services, Office of Inspector General sent Respondent a letter, informing him that he had been excluded from Medicare, Medicaid, and all federal health care programs for a period beginning on October 19, 2017, and lasting a minimum of five years. Gov. Ex. 8; Tr. 40. The GS also testified that the New York State Office of the Medicaid Inspector General had sent Respondent a letter informing him that he had been excluded from the state's Medicaid program. Gov. Ex. 7; Tr. 36–37.

Respondent's exclusion from Medicare, Medicaid, and all federal health care programs, along with Respondent's conviction of Conspiracy to Distribute Oxycodone, are the bases of the Government's present case opposing Respondent's application for a new COR. The GS testified that, on February 16, 2021, she ran a new search on a web page of the U.S. Department of Health and Human Services, Office of Inspector General, and confirmed through that search that Respondent was still excluded from all federal health care programs. Tr. 43.

The GS came across as an objective investigator, with no discernable motive to mislead, fabricate, or exaggerate. The testimony of this witness was primarily focused on the uncontroversial[9] introduction of documentary evidence and her contact with this case, and was sufficiently detailed, plausible, and internally consistent to be afforded full credibility.

D. Respondent's Case

Respondent, proceeding *pro se,* presented his own testimony and offered four exhibits in support of his case. According to Respondent, he received a Bachelor's degree from the University of New York and thereafter studied genetic engineering in a Ph.D. program. Tr. 51. He departed that program with a Master's Degree and entered Temple University Medical School, where he studied Podiatric Medicine. *Id.* Respondent graduated from Temple University in 1992 and completed his residence at a Veterans' Affairs hospital in Brooklyn, New York. Tr. 52. He obtained medical licenses in both New York and Pennsylvania and

[3] After conducting the merits hearing in this case, the tribunal mailed a hard copy of the transcript of the hearing to both parties. Despite two separate delivery attempts, the hard copy could not be delivered to Respondent's address. Chambers reached out to Respondent to confirm his address, but delivery was never effectuated. Respondent was, however, provided with an electronic version of the transcript and had an opportunity to submit corrections to the transcript.

[4] *United States* v. *Stephen Owusu,* No. 2:11–CR–0709–001 (LDW) (E.D.N.Y. June 13, 2017).

[5] Respondent has stipulated to the factual basis underlying this allegation. *See* Stip. 5.

[6] Respondent has stipulated to the factual basis underlying this allegation. *See* Stip. 5.

[7] Specifically, the testimony from the GS laid the foundation for Government Exhibits 1, 4, 5, 6, 7, 8, and 9. Tr. 24–26, 28–29, 31–33, 34–35, 36–39, 40–41, 42–43.

[8] Respondent also stipulated to this conviction. *See* Stip. 3, *infra.*

[9] Respondent did not object to the admission of any exhibit offered by the Government. Tr. 26, 30, 33, 35, 39, 42, 43–44.

began practicing medicine in New York in 1994. Tr. 53; 57.

Respondent has worked both as a solo practitioner and a clinic physician, specializing in wound care at two different clinics. Tr. 54; 57–59. In one of those clinics, Respondent served as the director, specializing in baric neuropathy, supervising three to four nurses and nurse practitioners, and seeing 50 patients a day. Tr. 54–56. For nearly ten years, starting in 1998, he also worked in a dialysis clinic specializing in treating patients in ''end-stage renal dialysis'' who suffered lower extremity problems. Tr. 61–63.

Respondent testified that, prior to 2011, he never had any disciplinary problems in either New York or Pennsylvania and had no arrests or convictions. Tr. 60; 64; 87.

Respondent admitted that he pleaded guilty to one count of Conspiracy to Distribute Oxycodone on June 13, 2017, in violation of 21 U.S.C. 841(a), (b)(1)(C), and 846. Stip. 3; *United States* v. *Stephen Owusu,* No. 2:11–CR–0709–001 (LDW) (E.D.N.Y. June 13, 2017). But Respondent's description of the events behind that conviction evolved over the course of these proceedings. In his second Prehearing Statement,[10] Respondent referenced ''2 falsified prescriptions in [his] name to which [he] was called to cooperate with the police for prosecution [and] lost prescription pads that a pharmacist attested to but which [his] lawyers would not allow court trial.'' ALJ Ex. 12 at 3; *see also* Tr. 131–32 (affirming statement as accurate). In his Supplemental Prehearing Statement, Respondent stated that he ''never conspired to sell or distribute oxycodone and [he] will never conspire to sell or distribute oxycodone or any controlled substance(s).'' ALJ Ex. 14 at 5.

During the hearing, Respondent testified that he had prescribed oxycodone for one patient (who had been referred to him by another, trusted patient) on the patient's third visit. Tr. 67–70. Specifically, he prescribed the oxycodone because the patient had brought oxycodone in with him, told the Respondent he had taken it from his brother, and it was the only medication that reduced his pain. Tr. 69–70. Respondent refilled the oxycodone prescription approximately once a month or once every two months for two years. Tr. 74. The same patient brought in a couple of friends on the same construction site where he worked and Respondent likewise prescribed those patients oxycodone. Tr. 75. Respondent explained that he prescribed oxycodone because he was ''very naïve'' and sometimes ''too helpful'' or ''too kind.'' Tr. 64 and 76.

He also testified that two prescription pads were lost from his office and ''a lot of guys'' had come to the pharmacy and written prescriptions from his pad. Tr. 76. According to Respondent, someone from the pharmacy would have testified for him. Tr. 76; Tr. 108. Respondent's lawyers, however, declined to investigate his defense and DEA produced only 20 of the 200 it alleged were illegal. Tr. 108–109; *see also* Tr. 126 (he stated that DEA never showed him the other 180 prescriptions).

On cross-examination, Respondent admitted that, on one occasion, he delivered multiple oxycodone prescriptions to a patient in a parking lot at 8:30 p.m. or 9:00 p.m. Tr. 113–115. He did so ''from the kindness of [his] heart'' because the patient was taking his son to a football practice or game and could not make it to the medical office in time. Tr. 109–110. At the time, Respondent did not realize it was a ''setup,'' and that it was ''staged.'' *Id.; see also* Tr. 113 (''I would call it staged. Why? Because I had no idea what was going on.''). The patient was, in fact, an informant or, as Respondent testified: ''the very person who they accused [Respondent] [of] conspiring to distribute oxycodone with was somebody . . . [Respondent] didn't know was already a criminal [and] who had already been incriminated. And then the Court used him . . . as an informant, sent him to [Respondent], [he] asked [Respondent] for the medication, and this is how it began.'' Tr. 65 (cleaned up).

Respondent insisted that he charged the patient $70, even though the patient paid him $300 for the prescriptions, and testified that ''why [the patient] gave [him] $300, [he doesn't] know.'' Tr. 115. When interviewed by DEA agents, he admitted that he made approximately $30,000 over the course of two years for these patients. Tr. 111–112. He viewed the cash payment in the parking lot as ''almost like a technicality'' because the patient would have paid him the same amount had he come into the office. Tr. 126.

When asked whether he had examined his patients before prescribing, Respondent provided an evasive answer:

> Q: Dr. Owusu, isn't it true that you issued multiple prescriptions for oxycodone without examining the patients?
>
> A: I examined them, Your Honor. Counsellor, I examined them.
>
> Q: All of them?
>
> A: Well, the—the initial—the initial patients, all of them were examined.

Tr. 117.

Respondent emphasized that he was hesitant to explain his prior convictions because he did not ''want it to be misconstrued as a lack of penitence and a lack of repentance.'' Tr. 50; *see also* Tr. 133. Ultimately, however, Respondent testified repeatedly that—despite his guilty plea—he did not, in fact, conspire to distribute oxycodone. *See, e.g.,* Tr. 64 (''I was not a co-conspirator, and I did not conspire at all.''); *id.* (''this so-called conspiracy case''); Tr. 65. (''the record will show I never had—never was involved in any—any infraction of the law. Never, never.''); Tr. 66 (''I was never, myself, never, and I would say—I would say until my dying day, never conspired to distribute drugs. Never. And I never will, Your Honor.''); Tr. 78 (attorney believed he was innocent); Tr. 80 (''But all those conspiratorial charges that they added on, no.''); Tr. 116 (''I was innocent, okay?''); Tr. 125 (affirming statement made in his Prehearing Statement that he had accepted responsibility ''despite the fact I never conspired to sell or distribute oxycodone''); Tr. 134 (at plea hearing, under oath, he admitted that he had pleaded guilty even though many of his statements were ''not only just not true . . . I just didn't feel like a lot of them were right.'').

Rather, Respondent claimed that he was forced, and indeed tricked, into pleading guilty by his lawyers. *See, e.g.,* Tr. 78 (''I thought I was going for [the lawyer] to take me to a DEA office. I went to him that day with the understanding that we were going to the DEA office to help me get my DEA license back. And I went to the courtroom, and that was the day he made me plead guilty.''); Tr. 79–80 (''I had to say yes because my lawyer told me to just say yes—yes, yes, and I . . . went all along like that''); Tr. 76 (attorney forced him to plead guilty because he feared a racially unjust trial); Tr. 116 (attorney forced him to plead guilty because of ''the circumstances, the location of the Court, the selection of the jury''). At one point, however, Respondent also acknowledged that his attorney told him to plead guilty because of the incriminating video recording. Tr. 112.

Respondent admitted that he was guilty, but just for the ''two prescriptions I wrote . . . . [T]hat's what . . . my guilt is about.'' Tr. 80. He acknowledged that he had appeared

[10] Given Respondent's failure to summarize his testimony in his initial Prehearing Statement, this tribunal directed that he file a revised Prehearing Statement, which he did on January 10, 2021. ALJ Ex. 12.

before a federal district court judge for his plea hearing, signed his plea agreement, pleaded guilty under oath, was sentenced based on the facts he admitted, and told the district court judge that his guilty plea was voluntary. Tr. 130–134. Respondent was sentenced to three years' probation (Tr. 81), which he completed early without any infractions (Tr. 97–98; Resp't Ex. 3).

Indeed, Respondent often cast himself as the victim—repeatedly stating that he ''suffered'' because of the conviction. For example, after recounting the facts behind his conviction, Respondent stated: ''They were the things I have suffered in the past, okay? Some of the things I look back on, and I—I've suffered for the last ten years because.'' Tr. 132; *see also* Tr. 161 (''I have suffered a lot, and I have learned a lot.''). In other instances, Respondent described himself as a victim (Tr. 64) who had been ''punished enough'' (Tr. 105). Indeed, Respondent's primary argument for obtaining his registration was ''it's been enough time for punishment. It's been enough time that I have . . . paid the penalty.'' Tr. 163. [Respondent also stated, ''So, I am trustworthy. I've never been in a situation where my credibility ever, ever was in question until this situation . . . . I can promise you, I can, you know, that definitely I have learnt my lesson and very, very, well. And this will never again be repeated, never. Tr. 106]

According to Respondent, he has not earned his living from the practice of medicine since his arrest, since it is impossible to practice without a DEA registration. Tr. 61; Tr. 82–83. He admitted, however, that it was possible to practice without a DEA registration, although such practice would be limited. Tr. 119–121.

As for remedial measures, Respondent testified that he had taken four classes regarding opioid addiction—one in September 2011, one in 2019, one in July 2020, and one in February 2021. Tr. 83–86.[11] Three of those classes were mandated by the New York licensing board; the 2019 training was a day of specialized training at a general medical conference. Tr. 84–85. Respondent still has a current medical license in New York, valid until September 30, 2023. Tr. 86–91; Resp't Ex. 1.

Finally, Respondent submitted a letter from Dr. B.-A. (doctor of Public Administration) regarding Respondent's current work at his clinic supporting his character. Resp't Ex. 2; Tr. 96; 123.[12]

As noted in more detail in the Analysis section, *infra,* Respondent's testimony did not present as credible on the key issue of his culpability because he contradicted his representations under oath in the federal prosecution, his description of events was not plausible, and he minimized his own responsibility.

E. Government's Rebuttal Case

The Government offered one rebuttal witness—a Special Agent of the Drug Enforcement Administration (hereinafter, the SA). The SA testified that he is assigned to the Long Island District Office in Central Islip, New York. Tr. 138. The Special Agent also testified that he has been a Special Agent with DEA since 1996, and that his job duties include conducting investigations, some of which are undercover. Tr. 139. In approximately 2011, The Special Agent became familiar with Respondent during an investigation involving oxycodone distribution. Tr. 139–140. During that investigation, Respondent was identified and arrested. Tr. 140.

An individual named B. C.—a patient of Dr. Owusu's—cooperated with the Government in this 2011 investigation. *Id.* B.C. specifically provided the SA and other agents at DEA with information regarding his illegal purchase of prescription narcotics from Respondent. *Id.* At the direction of DEA, B.C. met with Respondent while wearing a concealed video recording device. Tr. 140–141. The SA, along with several other DEA agents, observed the meeting between Respondent and B.C. Tr. 142. The SA also later retrieved the video recording device from B.C. and observed the video recording of the meeting. Tr. 143. Respondent and B.C. met in the Mercy Hospital parking lot in Rockville Center, New York. Tr. 141. During the meeting, B.C. purchased prescriptions for narcotics from Respondent. *Id.* Initially, when asked how many prescriptions B.C. had purchased during the meeting, the SA testified that he did not remember. *Id.*

The SA, relying upon a post-arrest report, testified that Respondent had issued numerous prescriptions during the recorded transaction with B.C., but that the report did not specify how many.[13] Tr. 147–48. The SA also testified that Respondent had admitted that he had met several times with B.C. over a several-year period, and that he had sold B.C. oxycodone pills for $300 cash per prescription. Tr. 144–45. The SA testified that, after being read his *Miranda* warning in the SA's presence, Respondent stated that he had made approximately $40,000 from selling illegal prescriptions to B.C. Tr. 145, 153.

The SA testified that, after his arrest, Respondent stated that he did conduct a physical examination of B.C. before selling the prescription narcotics, but that, once confronted with the video of the transaction, Respondent admitted that was a lie—that, in fact, no examination was conducted—and apologized for lying. *Id.* The SA, when asked to summarize the content of the video, stated that he had not reviewed the video recently, but that he thought it showed B.C. getting into Respondent's vehicle for a short period of time, paying for the prescriptions for narcotics, and then exiting the vehicle. Tr. 146. Later, when asked about the video recording, The SA testified that he was mistaken, and then corrected himself and stated that, in fact, B.C. and Respondent stayed in their respective cars throughout the transaction, and that B.C. did not enter Respondent's vehicle. Tr. 154.

On cross-examination, the SA testified that he recalled seeing the meeting between Respondent and B.C. Tr. 149. He also testified that he was not sure if he ever had to move his vehicle to get a better view of the transaction, and he could not remember if his view was obstructed at any time. *Id.* The SA did, however, recall that there were multiple DEA agents conducting surveillance in the area in order to observe the transaction, and he stated that he was in constant radio communication with those agents. *Id.* He also testified that at least one of

[11] In his revised Prehearing Statement, Respondent described his training as: ''One whole day OPIOID CRISIS class I attended around Fall 2011; several other continuing medical educational SEMINARS attended in the years; A requisite pre-certifying OPIOID crisis, addiction and treatment course for all NY State Practitioners taken in 2018.'' ALJ Ex. 12 at 4. Although there is some discrepancy between this description and Respondent's testimony at trial, I do not question that Respondent has taken multiple courses over the years, especially as many of those courses were mandatory for his continued licensure.

[12] This tribunal sustained the Government's objection regarding Respondent's Exhibit 4, which was a ''Certificate of Relief from Disabilities'' from the New York Department of Corrections and Supervision. Tr. 104. That document was excluded for two reasons. First, this tribunal could not ascertain its authenticity given numerous inconsistencies, including a docket number that did not match the docket number on Respondent's federal conviction. Tr. 99–104. Second, it was not relevant because it did not specifically relate to Respondent's medical license. Tr.100. [I agree with the ALJ and find that this document is not legally relevant to the current matter.]

[13] This post-arrest report is also known as a DEA–6, which is a report of investigation. Tr. 143. The SA testified that this specific DEA–6 was titled, ''Post Arrest Statements of Dr. Stephen Owusu on July 19, 2011, at 175 Pine Lawn Road, Melville, New York.'' *Id.* At the time the report was made, this was the address of the Long Island DEA office. *Id.*

those agents would have had a good view of the transaction at any given time. *Id.* The SA also could not recall how much money B.C. had given Respondent during the transaction, but testified that any money B.C. had given Respondent would have been provided by DEA. Tr. 149–150. The SA further testified that the interrogation of Respondent took place in Melville, New York, where the Long Island DEA field office was located at the time. Tr. 151.

The SA came across as an objective investigator, with no discernible motive to mislead, fabricate, or exaggerate. Though at times, the SA did struggle to remember certain details, he readily admitted what he did not remember, and when his recollection was refreshed, his testimony was sufficiently detailed, plausible, and internally consistent to be afforded full credibility.

II. Discussion

The Government opposes Respondent's COR application under the dual bases that he has been convicted of a controlled-substance-related felony and that he has been excluded from participating in a specified federal health care program. ALJ Ex. 1.*[C][In its OSC, the Government relies upon grounds Congress provided to support revocation/suspension, not denial of an application. Prior Agency decisions have addressed whether it is appropriate to consider a provision of 21 U.S.C. 824(a) when determining whether or not to grant a practitioner registration application. For over forty-five years, Agency decisions have concluded that it is. *Robert Wayne Locklear, M.D.,* 86 FR at 33744–45 (collecting cases); *see also, William Ralph Kincaid.* In *Robert Wayne Locklear, M.D.,* the former Acting Administrator stated his agreement with the results of these past decisions and reaffirmed that a provision of section 824 may be the basis for the denial of a practitioner registration application. 86 FR at 33745. He also clarified that allegations related to section 823 remain relevant to the adjudication of a practitioner registration application when a provision of section 824 is involved. *Id.*

Accordingly, when considering an application for a registration, I will consider any actionable allegations related to the grounds for denial of an application under 823 and will also consider any allegations that the applicant meets one of the five grounds for revocation or suspension of a registration under section 824. *Id. See also Dinorah Drug Store, Inc.,* 61 FR 15972, 15973–74 (1996).

A. 21 U.S.C. 823(f): The Five Public Interest Factors

Pursuant to section 303(f) of the CSA, ''[t]he Attorney General shall register practitioners . . . to dispense . . . controlled substances . . . if the applicant is authorized to dispense . . . controlled substances under the laws of the State in which he practices.'' 21 U.S.C. 823(f). Section 303(f) further provides that an application for a practitioner's registration may be denied upon a determination that ''the issuance of such registration . . . would be inconsistent with the public interest.'' *Id.* In making the public interest determination, the CSA requires consideration of the following factors:

> (1) The recommendation of the appropriate State licensing board or professional disciplinary authority.
> (2) The applicant's experience in dispensing, or conducting research with respect to controlled substances.
> (3) The applicant's conviction record under Federal or State laws relating to the manufacture, distribution, or dispensing of controlled substances.
> (4) Compliance with applicable State, Federal, or local laws relating to controlled substances.
> (5) Such other conduct which may threaten the public health and safety.

21 U.S.C. 823(f).

In this case, it is undisputed that Respondent holds a valid state medical license and is authorized to dispense controlled substances in the State of New York where he practices.

Because the Government has not alleged that Respondent's registration is inconsistent with the public interest under section 823, and although I have considered 823, I will not analyze Respondent's application under the public interest factors. Therefore, in accordance with prior agency decisions, I will move to assess whether the Government has proven by substantial evidence that a ground for revocation exists under 21 U.S.C. 824(a).]

Regarding the two revocation/suspension grounds the Government specifically relied on in this case, the CSA, in pertinent part, states the following:

> A registration pursuant to section 824 of this title to . . . dispense a controlled substance . . . may be suspended or revoked by the Attorney General upon a finding that the registrant:
> (2) has been convicted of a felony under this subchapter or subchapter II or any other law of the United States, or of any State, relating to any substance defined in this subchapter as a controlled substance . . . [or]
> (5) has been excluded (or directed to be excluded) from participation in a program pursuant to section 1320a–7(a) of Title 42.

21 U.S.C. 824(a)(2) and (5). Each ground is herein addressed *in seriatim.*

B. Exclusion From Participation in a Federal Health Care Program

The Government seeks denial of Respondent's COR application under 21 U.S.C. 824(a)(5) because he has been excluded from participation in a federal health care program (Mandatory Medicare Exclusion or MME). [The Agency has] discretion to deny a respondent's application for a COR if Respondent ''has been excluded (or directed to be excluded) from participation in a program pursuant to [42 U.S.C. 1320a–7(a)].'' 21 U.S.C. 824(a)(5) (2012). *See supra* II. Section 1320a–7 comprises the exclusion of individuals or entities by the Secretary of the U.S. Department of Health and Human Services (HHS) from participating in federal health care programs. 42 U.S.C. 1320a–7 (2012). A federal health care program is (1) a plan or program providing health benefits and which is funded in some way by the U.S. government;[14] or (2) a state health care program or plan receiving certain approval or funding from the U.S. government.[15] DEA decisions clearly establish that Medicare and Medicaid programs are among those federal health care programs in which exclusion from one of them can constitute a basis for denial of a COR application. *See, e.g., Daniel Ortiz-Vargas, M.D.,* 69 FR 62095, 62095–96 (2004); *Joseph M. Piacentile, M.D.,* 62 FR 35527, 35527–28 (1997); *Anibal P. Herrera, M.D.,* 61 FR 65075, 65077 (1996); *Suresh Gandotra, M.D.,* 58 FR 64781, 64782 (1993); *George D. Osafo, M.D.,* 58 FR 37508, 37509 (1993).

Specifically, subsection (a) of § 1320a–7, the part of the statute referenced by 21 U.S.C. 824(a)(5), dictates when HHS is required to exclude individuals or entities.[16] *Id.* § 1320a–7(a) (''The Secretary *shall* exclude the following individuals and entities from participation in any [f]ederal health care program . . . .'') (emphasis added). There are four instances requiring mandatory exclusion: (1) conviction of a criminal offense ''related to the delivery of an item or services under [42 U.S.C. 1395 *et seq.*] or under any [s]tate health care

*[C] I have substituted the RD's language assessing the application of the revocation grounds to my assessment of an application under 21 U.S.C. 823(f) in accordance with recent decisions.

[14] 42 U.S.C. 1320a–7b(f).

[15] 42 U.S.C. 1320a–7(h).

[16] In contrast to subsection (a), subsection (b) of 42 U.S.C. 1320a–7 provides sixteen discretionary grounds of exclusion from health care programs. 42 U.S.C. 1320a–7(b) (2012).

program''; (2) conviction, ''under [f]ederal or [s]tate law,'' related to patient ''neglect or abuse'' connected ''with the delivery of a health care item or service[;] (3) [f]elony conviction related to health care fraud''; and ''(4) [f]elony conviction related to . . . the unlawful manufacture, distribution, prescription, or dispensing of a controlled substance.'' *Id.* The unambiguous words of the CSA in 21 U.S.C. 824(a)(5) provide that a practitioner's registration ''may be suspended or revoked'' if the practitioner ''has been excluded'' from participating in a program pursuant to 42 U.S.C. 1320a–7(a). 21 U.S.C. 824(a)(5). DEA has strictly interpreted this provision and acknowledged that the Administrator has discretionary power to suspend or revoke a registration only when the practitioner has been mandatorily excluded from a federal health care program under subsection (a) of 42 U.S.C. 1320a–7. *See, e.g., Terese, Inc., d/b/a Peach Orchard Drugs,* 76 FR 46843, 46847 (2011); *Herrera,* 61 FR at 65077; Gandotra, 58 FR at 64782; *Nelson Ramirez-Gonzalez, M.D.,* 58 FR 52787, 52788 (1993). As specified by the CSA, the misconduct mandating exclusion does not need to relate to controlled substances in order to provide the Administrator with the power to suspend or revoke (or in this case deny an application for) a COR. *Jeffrey Stein, M.D.,* 84 FR 46968, 46973 (2019); *Ortiz-Vargas,* 69 FR at 62095–96; *Melvin N. Seglin, M.D.,* 63 FR 70431, 70433 (1998); *Osafo,* 58 FR at 37509. [Omitted for brevity.]

When DEA alleges that a practitioner has been mandatorily excluded from a federal health care program under 42 U.S.C. 1320a–7a, and thus seeks to impose a COR sanction, the Government bears the burden to prove that such an exclusion occurred. *Jin,* 77 FR at 35023; *see also,* 21 CFR 1301.44(d) (2018) (''At [a] hearing for the denial of a [COR], the [Government] shall have the burden of proving that the requirements for such registration . . . are not satisfied.''). However, even a mandatory exclusion does not curtail the authority of DEA to independently weigh the evidence presented and exercise discretion. *Stein,* 84 FR at 46970 [omitted parenthetical.] Accordingly, DEA is not required to deny Respondent's COR application merely because he is subject to a mandatory exclusion. *Id.*

*[D] In the instant case, it is undisputed that Respondent was excluded from participation in federal health care programs under the mandatory authority of 42 U.S.C. 1320a–7a. Stip. 4; Gov't Ex. 5. Consequently, under § 824(a)(5), it is within the discretion of the Agency to determine, based on the entire record, whether Respondent's exclusion from federal health care programs renders granting his application for a COR inappropriate. *See Narcisco A. Reyes, M.D.,* 83 FR 61678, 61681 (2018) (holding that where the Government has demonstrated the requisite mandatory federal health care program exclusion(s) it has satisfied its *prima facie* case, shifting the burden to the respondent[]). Inasmuch as the parties have stipulated to Respondent's exclusion and the record contains evidence establishing as much, the Government has met its burden in this regard. Stip. 4, 5, 7; *See* 21 CFR 1301.44(d) (2018).

*[E] Accordingly, in review of the evidence of record, including the stipulations of the parties, OSC Allegation 3 is *sustained*.

C. Controlled-Substance-Related Felony Conviction

The Government also alleges that Respondent's application should be denied because he has been convicted of a felony related to controlled substances, pursuant to 21 U.S.C. 824(a)(2). Under that provision, the Attorney General *may* suspend or revoke a registration issued under 21 U.S.C. 823 ''upon a finding that the registrant . . . has been convicted of a felony under this subchapter or subchapter II or any other law of the United States, or of any State, relating to any substance defined in this subchapter as a controlled substance or a list I chemical.'' 21 U.S.C. 824(a)(2)(emphasis added).

*[F] The fact of Respondent's conviction in this case has been conclusively established. Stip 3. There is no question that Respondent pleaded guilty to one count of ''Conspiracy to Distribute Oxycodone, a Class C Felony,'' in violation of 21 U.S.C. 841(a), (b)(1)(C) and 846,[17] which is a felony related to a controlled substance. It is thus beyond argument that the Government met is *prima facie* burden of proving that Respondent has been convicted of a felony related to controlled substances.

*[G] Accordingly, in review of the evidence of record, including the stipulations of the parties, OSC Allegation 2 is *sustained*.

III. Sanction

Inasmuch as Congress has determined that a mandatory health care program exclusion constitutes an adequate basis for sanction, once the Government has demonstrated that a respondent has been so excluded, the burden shifts to the respondent to show that registration should be granted as a matter of discretion. *See Jin,* 77 FR at 35023. This burden may be carried by establishing an unequivocal acceptance of responsibility for the misconduct that formed the basis of the exclusion and by adequately demonstrating remedial measures to ensure against repetition. *Id.; Stein,* 84 FR at 46972–73 (respondent's assertion that his misdeeds had no effect on his patients held to indicate a minimization of his acceptance of responsibility rendering it less than unequivocal). This acceptance of responsibility must be *unequivocal;* a registrant's dishonesty under oath undermines the registrant's acceptance of responsibility and shows that the registrant ''cannot be entrusted with a registration.'' *Rose Mary Jacinta Lewis, M.D.,* 72 FR 4035, 4042 (2007). Mere stipulation to facts without admitting to misconduct does not amount to an acceptance of responsibility. *Ajay S. Ahuja, M.D.,* 84 FR 5479, 5498 n.32 (2019). Moreover, a respondent's own statements minimizing his or her misconduct weigh against any acceptance of responsibility. *Arvinder Singh, M.D.,* 81 FR 8247, 8249–51 (2016).

In *Jin,* the Agency relied, in part upon *Melvin N. Seglin, M.D.,* 63 FR 70431 (1998), a case in which the Agency found that the respondent ''accepted responsibility for his misconduct which was not likely to recur.'' *Id.* at 35026. In evaluating the reasonableness of sanctions generally, the Agency has also required an evaluation of the egregiousness of the proven misconduct as well as an analysis of considerations

*[D] Per the usual format of Agency decisions, I have removed the discussion of the legal standard for a respondent's acceptance of responsibility from the *prima facie* analysis to the Sanction section below. Further, in the Sanction section below, I have combined the ALJ's analysis of Respondent's acceptance of responsibility pertaining to the mandatory exclusion allegation with the ALJ's analysis of Respondent's acceptance of responsibility pertaining to the controlled substance felony conviction allegation. I have also combined the former two analysis sections with the brief summary regarding the Respondent's acceptance of responsibility that the ALJ had originally included in the Sanction section. I have not made substantive changes except where noted in brackets. *See infra.*

*[E] Analysis of Respondent's acceptance of responsibility moved to Sanction section. *See supra* n.*D.

*[F] Discussion of the legal standard for a respondent's acceptance of responsibility moved to Sanction section. *See supra* n.*D.

[17] *United States* v. *Stephen Owusu,* No. 2:11–CR–0709–001 (LDW) (E.D.N.Y. June 13, 2017).

*[G] Analysis of Respondent's acceptance of responsibility moved to Sanction section. *See supra* n.*D.

of specific and general deterrence,[18] and these factors have been specifically applied by the Agency in the MME context. *Arvinder Singh, M.D.,* 81 FR 8247, 8248 (2016). The egregiousness of the conduct is also considered in the MME context, even when a controlled-substance-related crime does not form the basis of the exclusion. *Stein,* 84 FR at 46973.

Further, the Agency has stated that ''ordinarily[,] a respondent who has been convicted of a felony subject to § 824(a)(2) is entitled to present a case as to why his registration should not be revoked (or his application denied)'' because conviction of a felony under the CSA is not a *per se* bar to registration. *William J. O'Brien, III, D.O.,* 82 FR 46527, 46529 (2017). As is the case with other DEA administrative enforcement cases seeking a sanction, once the Government has met its *prima facie* case, under § 824(a)(2) by merely establishing the existence of the requisite conviction,[19] a respondent can avoid sanction only to the extent he/she/it is able to demonstrate an unequivocal acceptance of responsibility and remedial steps that are tailored to preventing recurrence. *Singh,* 81 FR at 8250 (''[The respondent] was required to acknowledge the full scope of his criminal behavior and the risk of diversion it created . . . .''); *Hassman,* 75 FR at 8236; *Ronald Lynch, M.D.,* 75 FR 78745, 78753 (2010) (holding that the respondent's attempts to minimize misconduct undermined purported acceptance of responsibility); *see also Michael A. White, M.D.,* 79 FR 62957, 62967 (2014); *Steven M. Abbadessa, M.D.,* 74 FR 10077, 10081 (2009).

There can be no debate that the Government has met its *prima facie* burden of proving that the requirements for a sanction pursuant to 21 U.S.C. 824(a)(2) and (5) are satisfied. It is well established that, in cases involving Medicare exclusion and prior convictions, a respondent must show that he unequivocally accepts responsibility for his past misconduct if he wishes this tribunal to exercise its discretionary authority to grant a COR. *See, e.g., Stein,* 84 FR at 46972. Accordingly, unequivocal acceptance of responsibility for both bases of established misconduct stands as a condition precedent for Respondent to prevail.

The purpose of this process is to determine whether the applicant can and should be entrusted with responsibly discharging the life and death duties of a DEA registrant. For this purpose, acceptance of responsibility is critical. The Agency's interpretation of its statutory mandate on the exercise of its discretionary function under the CSA has been sustained on review. *Jones Total Health Care, L.L.C.* v. *DEA,* 881 F.3d 823, 830–31 (11th Cir. 2018); *MacKay* v. *DEA,* 664 F.3d 808, 822 (10th Cir. 2011); *see also, Hoxie* v. *DEA,* 419 F.3d 477, 483 (6th Cir. 2005) (holding that admitting fault and candor with investigators are both important factors in determining whether a physician is fit to hold a COR). Agency prior decisions are clear that a Respondent must ''unequivocally admit fault'' as opposed to demonstrate a ''generalized acceptance of responsibility.'' *The Medicine Shoppe,* 79 FR 59504, 59510 (2014); *see also, Lon F. Alexander, M.D.,* 82 FR 49704, 49728 (2017). To satisfy this burden, Respondent must ''show true remorse'' or an ''acknowledgement of wrongdoing.'' *Robert A. Leslie,* 68 FR 15227, 15228 (2003). The Agency has made it clear that unequivocal acceptance of responsibility is paramount for avoiding sanction. *Robert L. Dougherty, M.D.,* 76 FR 16823, 16834 (2011) (citing *Jayam Krishna-Iyer,* 74 FR 459, 464 (2009)). However, no legal authority holds that such acceptance, standing alone, guarantees a favorable result for every applicant or registrant.

A. Acceptance of Responsibility

To avoid sanction, it is incumbent upon Respondent to demonstrate acceptance of responsibility for his actions and remedial measures taken, and Respondent fails to persuade the tribunal that granting his application for a COR would be consistent with the public interest. To begin, Respondent's testimony was not candid. Candor to the court is of paramount importance. The issue of trust is necessarily a fact-dependent determination based on the circumstances presented by the individual respondent; therefore, the Agency looks at factors, such as the acceptance of responsibility and the credibility of that acceptance as it relates to the probability of repeat violations. A registrant's candor during the investigation and hearing is an important factor in determining acceptance of responsibility and the appropriate sanction; as is whether the registrant's acceptance of responsibility is unequivocal. *Heavenly Care Pharmacy,* 85 FR 53402, 53420 (2020); *see also Fred Samimi,* M.D., 79 FR 18698, 18713 (2014); *Robert F. Hunt, D.O.,* 75 FR 49995, 50004 (2010).

Moreover, throughout his testimony, Respondent had ample opportunity to take full and unequivocal responsibility for his misconduct. Yet repeatedly, when pressed on the details of his conviction, Respondent failed to do so, often deflecting blame to his lawyers, who, he says, forced him to accept a plea deal. Tr. 76–80; 116; ALJ Ex. 14 at 2 (referring to ''unscrupulous lawyers whose solutions were worse than the problem''). This refusal to accept blame is compounded by the inescapable conclusion that Respondent's testimony was not credible on the key facts surrounding his federal conviction for conspiracy to distribute oxycodone. For example, when asked about the surrender of his previous DEA registration, Respondent made a point to ''clarify'' by stating, ''I pleaded guilty . . . that I wrote those medications. I wrote them without . . . an attending. But all those conspiratorial charges that they added on, no. . . . [I]n the . . . two pads I wrote—the two prescriptions I wrote, I pleaded guilty for that. . . . [T]hat's what . . . my guilt is about.'' Tr. 80. This is far from true. As outlined by the stipulations in these proceedings, Respondent pleaded guilty in federal court to Conspiracy to Distribute Oxycodone. Stip. 3. Although part of the indictment against him included allegations that Respondent had left prescription pads unattended, and those pads ended up the source of falsified prescriptions, Respondent's guilt is about much more than that. Respondent was arrested after an undercover operation, detailed by the testimony of the SA. Tr. 138–155. This transaction amounted to an illegal sale of narcotics and had nothing to do with Respondent's lost prescription pads. Respondent's attempt, therefore, to direct focus in these proceedings to the lost pads, rather than the sale of oxycodone prescriptions in a parking lot, amounts to a failure to accept responsibility for the entirety of his criminal conduct. As if that were not a poor enough reflection of his credibility, Respondent repeatedly and explicitly insisted that he never conspired to distribute oxycodone—the very conduct to which he pleaded guilty before a federal judge. Tr. 64–66; 78; 116; 125; ALJ 14 at 5.

Respondent's failure to acknowledge the full scope of his criminal liability presents a more significant problem—although Respondent admitted that he had appeared before a federal district

[18] *David A. Ruben,* 78 FR 38363, 38364, 38385 (2013).

[19] *Dan Hale, D.O.,* 69 FR 69402, 69406 (2004) (''. . . facts established by criminal convictions are *res judicata* and cannot be re-litigated in a DEA administrative forum.''); *Raymond A. Carlson, M.D.,* 53 FR 7425, 7426 (1988) (''the conviction alone provides sufficient statutory authority to support the revocation of Respondent's DEA Certificate of Registration.'').

court judge for his plea hearing, signed his plea agreement, pleaded guilty under oath, was sentenced based on the facts he admitted, and told the district court judge that his guilty plea was voluntary (Tr. 130–134), Respondent also disavowed those proceedings. For example, Respondent took the implausible position that, on the day he pleaded guilty, he showed up to his lawyer's office thinking the two of them were going to speak to the prosecutor in his case about getting his DEA license back. Tr. 78–79.

Indeed, Respondent testified in this hearing that his attorney told him to just ''follow his orders'' and ''made [him] plead guilty.'' Tr. 79. Even more disturbing, Respondent testified that he had to say yes because ''my lawyer told me to just say yes—yes, yes, and I—and I went all along like that.'' Tr. 80. Later, in these proceedings, Respondent admitted that his statements under oath at his plea hearing, before a federal district court judge, were ''not only just not true . . . I just didn't feel like a lot of them were right.'' Tr. 134.

Respondent's claims that he was forced or tricked into pleading guilty are simply not believable. Respondent's late-night delivery of *multiple* oxycodone prescriptions in a parking lot in exchange for $300 in cash was captured on video-tape. Tr. 113–115. As even Respondent admitted, his attorney told him he would have to plead guilty because of that incriminating recording. Tr. 112. Even when faced with this fact, Respondent again diverted blame to his lawyers, stating that they discouraged him from going to trial because the federal court in which he would be tried was a ''white Court'' and that Respondent's race would be a disadvantage at trial. *Id. See also* Tr. 131–32; ALJ Ex. 12 at 3.

Ultimately, this tribunal cannot ignore that Respondent has changed his version of events—under oath—in two different judicial proceedings. By pleading guilty, Respondent obtained a benefit of acceptance of responsibility and, ultimately, a sentence of probation despite facing a Guideline Sentence of 57 to 71 months. Tr. 130; Govt Ex. 5. Before this tribunal, when faced with the consequences of that plea, Respondent repeatedly proclaimed his innocence of the conspiracy to distribute oxycodone, minimizing his involvement to two prescriptions. Tr. 64–66, 80, 125; ALJ Ex. 14. It is hard to see how Respondent's testimony in this tribunal, when held up against his plea agreement, amounts to anything more than Respondent's attempt to have his proverbial cake and eat it too. His guilty plea in federal court saved him from significant prison time. But now, when faced with the consequences of that plea, he has changed the story in an effort to obtain a DEA registration. Either he was dishonest in federal court, or he was dishonest in these proceedings. Either way, Respondent was dishonest and has failed to accept full responsibility for his actions.

Other implausible aspects of Respondent's testimony certainly do not assist his request for a COR as they demonstrate a lack of candor. For example, Respondent's first instinct when speaking with DEA was to lie about whether he had performed an evaluation of the patient in the car—retracting that statement only when confronted with the existence of a video-recording and apologizing to DEA for his lie. Tr. 145. Significantly, Respondent's lie demonstrated clear consciousness of guilt—he stated he had examined his patient because he knew delivering prescriptions at night in a parking lot was wrong. Similarly unbelievable is Respondent's statement that he only charged his patient $70 for the parking lot prescriptions and had no idea why he was given $300 in cash. Tr. 115. This statement is inconsistent with the post-arrest statement, in which he admitted that he charged his patients $300 for the prescriptions. Tr. 142. Nor is it plausible that a pharmacy representative would have testified that multiple people filled out Respondent's prescription pads in front of pharmacy staff (Tr. 76, 108)—activity that would certainly have imperiled the pharmacy's DEA registration.[20]

All these inconsistencies are accompanied by a final troubling truth about Respondent's testimony: In the end, he saw himself as a victim. Respondent consistently referred to the undercover operation resulting in his arrest as ''staged'' or a ''set-up.'' Tr. 109–110, 113–115. Additionally, Respondent repeatedly contended that he had ''suffered a lot'' (Tr. 161) and had been ''punished enough.'' Tr. 105, 163; ALJ Ex. 12 at 3 (''I will acknowledge that the length of my punishment has been excessive and therefore demands a judicial reprieve.''); ALJ Ex. 14 at 4–5 (describing the ''windfall repercussions from this catastrophe. . . .''). In his Supplemental Prehearing Statement, he even asked, ''How much more damage/harm do you suppose is enough to satisfy/pacify the arm of the law?'' ALJ Ex 14 at 3. And when Respondent claimed that he had accepted responsibility for his misconduct, he did so only with a caveat that his lawyers forced him to plead guilty. Tr. 161–62 (claiming that he accepts responsibility even though that some things in the Government's criminal case against him ''were not true''). This conditional acceptance of responsibility is a far cry from *unequivocal* acceptance required to be entrusted with a DEA registration. *See Rose Mary Jacinta Lewis,* 72 FR at 4042 (affirming an immediate suspension when the respondent lied under oath to downplay her misconduct); *see also Singh,* 81 FR at 8249–51 (denying an application for a COR when the respondent repeatedly disputed the extent of his misconduct). Nor did Respondent's testimony at any point express true remorse for his wrongful conduct. *See Michael S. Moore, M.D.,* 76 FR 45867, 45868 (2011) (requiring a registrant to show ''true remorse'' for wrongful conduct in order to find an acceptance of responsibility).

Having concluded that Respondent has failed to prove an unequivocal acceptance of responsibility, I need not address remedial measures. *Ajay S. Ahuja, M.D.,* 84 FR 5479, 5498 n.33 (2019); *Daniel A. Glick, D.D.S.,* 80 FR 74800, 74801, 74810 (2015). Nevertheless, even if remedial measures were considered, they would not change the result.

The burden is on the respondent to present sufficient evidence of his remedial measures. *See Scott D. Fedosky, M.D.,* 76 FR 71375, 71378 (2011) (declining to give weight to remedial measures where the respondent testified about them but did not present any corroborating evidence to support his claim). And even if a respondent does introduce specific evidence of remedial measures, registration will not be granted unless such measures demonstrate that he or she can be entrusted with a COR. *Jeri Hassman. M.D.,* 75 FR 8194, 8237 (2010) (denying a COR where the Agency found that the respondent had learned nothing from the remedial steps she had taken).

Respondent claims that, prior to his arrest, he had ''no idea'' of the severity of the opioid epidemic. Tr. 83. He testified that he attended a mandatory class on opioids, which every prescriber must take. Tr. 84. Respondent also testified that he would take another class on February 28, 2021, but he did not provide any level of detail as to the

[20] These examples of inconsistencies are merely the most egregious. There were others. For example, Respondent insisted he earned only $30,000 from the patients to whom he prescribed Oxycodone (Tr. 111), whereas the SA testified that Respondent told DEA he had made $40,000 from these patients (Tr. 142). [I agree with the ALJ that this statement was not as egregious as the other inconsistencies, because after SA's testimony, Respondent appeared to admit that he had memory problems; however, I do note that the inconsistency further served to downplay the egregiousness of his crime. Tr. 155.]

curriculum of the class. *Id.* According to Respondent, these classes are required of prescribers every year, and the upcoming February 28 class will be his fourth class. *Id.* Respondent also testified that he had attended a conference in July 2019 on the topic of General Medicine, and that the last class in the conference focused on the opioid pandemic. Tr. 85–86.

To begin, it is of course troubling that a medical professional with a COR would not appreciate the severity of the opioid drug crisis in this country. *See Hassman,* 75 FR at 8237. And while Respondent testified as to several classes he has taken on the subject, most of those were mandatory. Furthermore, Respondent's testimony does not provide a level of detail sufficient for this tribunal to evaluate the classes and whether they constitute remedial measures. On its face, a mandatory class that all prescribers are required to take does not present as remedial in nature. Nor does mere compliance with mandatory requirements inspire confidence that Respondent has learned from his past misconduct and can now be entrusted with a COR. *See id.* Simply put, Respondent has not made an adequate showing of remedial measures [such that I could entrust him with a registration.]

Overall, as Respondent faces the hurdle of demonstrating an adequate acceptance of responsibility, his testimony was just not credible. Certainly, it would strain all bounds of reasonable jurisprudence to find that Respondent has accepted responsibility for his actions, despite his trivialization of his misconduct, his disavowal of his statements under oath in his plea hearing in federal district court, his implausible testimony, and his own view of himself as a victim.[21] Here, it bears repeating that Respondent did not accept responsibility unequivocally. In fact, it is hard to imagine a purported acceptance more equivocal than the one he offered. Respondent's own testimony is riddled with inconsistencies, statements that are inconsistent with admissions he made under oath in a federal criminal proceeding, implausible statements, and numerous examples of Respondent portraying himself as the victim. Indeed, there was no real expression of remorse, but a view that he had been unfairly targeted and ''set up'' by DEA and accusations of impropriety in the criminal proceedings. *See, e.g.,* Tr. 109–10 (describing parking lot transaction as a ''setup''); Tr. 126 (suggesting DEA improperly withheld 180 of the 200 prescriptions written on his allegedly stolen prescription pads). Respondent's lack of any meaningful acceptance of responsibility presents an insurmountable barrier to his application for a COR.

In any event, given the limited scope of Respondent's remedial measures, those measures do not change the outcome. His limited efforts do not establish a plan of remedial measures that assure the tribunal that he will not repeat the established transgressions. *See Hassman,* 75 FR at 8236. This case must be decided not merely upon what he *says,* but what he says and *does. C.f. Alra Laboratories* v. *DEA,* 54 F.3d 450, 452 (7th Cir. 1995) (sustaining the Agency's conclusion that past performance is the best predictor of future performance).

Although he testified that he has taken several classes on the opioid epidemic, Respondent provided no information about these classes. Nor does completion of one mandatory class per year tend to show that Respondent has taken sufficient remedial measures to address his past misconduct—or to even appreciate the egregiousness of this conduct. While Respondent claimed that he was naïve (Tr. 55, 76), and did not appreciate the full extent of the pandemic, he failed to articulate what specific steps he would take to ensure that his misconduct resulting in diversion would not be repeated.

Accordingly, I find that, in the face of the Government's *prima facie* case, Respondent has failed to unequivocally accept responsibility for his past misconduct; therefore, he cannot be trusted with a DEA COR. *See Singh,* 81 FR at 8250.

B. Specific and General Deterrence

In determining whether and to what extent imposing a sanction is appropriate, consideration must be given to the Agency's interest in both specific and general deterrence as well as the egregiousness of the offenses established by the Government's evidence. *David A. Ruben,* 78 FR 38363, 38384, 38385 (2013). The Agency has previously found [based on specific circumstances] that criminal convictions and sanctions by state licensing authorities can sufficiently deter physicians from engaging in misconduct, making the denial of an application for, or revocation of, a COR unnecessary to achieve the goal of general deterrence. *Kansky J. Delisma, M.D.,* 85 FR 23845, 23854 (2020). Likewise, such punitive measures can suffice to deter the registrant or applicant from future misconduct, making revocation or denial of an application unnecessary to achieve specific deterrence. *Id.*

With respect to specific deterrence, Respondent failed in these proceedings to portray a registrant who is remorseful, and who has worked hard to change for the better. Rather, Respondent came across as a person who says the right thing in order to get what he wants, and, when pressed, does not own up to his mistakes. Without a better indication of remorse, the tribunal can only conclude that granting Respondent a COR would put the public at risk of Respondent's previous diversionary behavior. Moreover, with respect to general deterrence, the Agency bears the responsibility to deter conduct similar to Respondent's past misconduct. *Ruben,* 78 FR at 38385. Granting a COR to an applicant who has neither unequivocally taken responsibility for his misconduct, nor demonstrated sufficient remedial measures to ensure such conduct will not happen again, would send a message to all that, so long as one completes a mandatory class or two per year, there will be few consequences to diverting controlled substances.

C. Egregiousness

Finally, this tribunal finds that Dr. Owusu's behavior was egregious. Dr. Owusu conducted a transaction that differs in no material respect from a drug deal. He sold multiple

[21] Respondent did, at times, testify as to his love of the medical profession and desire to help people. Tr. 62–63, 65. In addition, Respondent's Exhibit 2 is a letter from Dr. B.-A., the CEO of the American Medical Center, which is a clinic that Respondent has volunteered at. Resp't Ex. 2. The letter espouses the virtues of Respondent, and details the difficulties of finding medical professionals to work for clinics in impoverished areas, such as the one where Respondent volunteers. [Omitted. The letter can be of limited weight in this proceeding, however, because I have limited ability to assess the actual credibility of the reference given its written form. *See Michael S. Moore, M.D.,* 76 FR 45867, 45873 (2011) (evaluating the weight to be attached to letters provided by the respondent's hospital administrators and peers in light of the fact that the authors were not subjected to the rigors of cross examination). Further, it offers little value in assessing the Respondent's suitability to discharge the duties of a DEA registrant. Finally, absent Respondent's unequivocal acceptance of responsibility, what little value the letter might have offered me in evaluating my ability to trust Respondent is nullified by the fact that he himself has not shown me that he can be so entrusted. *See William Ralph Kincaid,* 86 FR 40636, 40641 (2021).] Respondent's past service—even his volunteer service—is simply not enough to outweigh his lack of acceptance of responsibility in these proceedings. The letter has no other relevance, as the Agency has consistently held that community impact is not a relevant consideration under the public interest factors. *Linda Sue Cheek, M.D.,* 76 FR at 66972; *see also Gregory D. Owens, D.D.S.,* 74 FR 36751, 36757 (2009). Here, the evidence of community impact offered by Respondent does nothing to explain the issues of credibility his testimony presents.

prescriptions for powerful controlled substances at night, in a parking lot, in a manner designed to avoid detection. Both then and now, Respondent has responded with calculated, inconsistent statements designed to escape culpability. In *Gonzales* v. *Oregon,* 546 U.S. 243, 270 (2006), the Supreme Court made clear that DEA has authority under the Controlled Substances Act to bar illicit drug dealing and trafficking as traditionally understood. Respondent, in this case, engaged in conduct that constitutes drug trafficking as traditionally understood, and, accordingly, the appropriate sanction is denial of his application for a DEA registration.

Accordingly, it is herein respectfully recommended that Respondent's application for a DEA registration be *denied*.

Dated: April 9, 2021.

Teresa A. Wallbaum,

Administrative Law Judge.

Order

Pursuant to 28 CFR 0.100(b) and the authority vested in me by 21 U.S.C. 823(f), I hereby deny the pending application for a Certificate of Registration, Control Number W19061136C, submitted by Stephen E. Owusu, D.P.M., as well as any other pending application of Stephen E. Owusu, D.P.M., for additional registration in New York. This Order is effective February 22, 2022.

Anne Milgram,

Administrator.

[FR Doc. 2022–01108 Filed 1–20–22; 8:45 am]

BILLING CODE 4410–09–P

DEPARTMENT OF JUSTICE

Drug Enforcement Administration

[Docket No. 22–1]

Alex E. Torres, M.D.; Decision and Order

On August 11, 2021, the Acting Assistant Administrator, Diversion Control Division, Drug Enforcement Administration (hereinafter, DEA or Government), issued an Order to Show Cause (hereinafter, OSC) to Alex E. Torres, M.D. (hereinafter, Respondent) of San Diego, California. OSC, at 1 and 3. The OSC proposed the revocation of Respondent's Certificate of Registration No. BT1734943. *Id.* at 1. It alleged that Respondent is ''without authority to handle controlled substances in California, the state in which [Respondent is] registered with DEA.'' *Id.* at 2 (citing 21 U.S.C. 824(a)(3)).

Specifically, the OSC alleged that on March 18, 2021, Respondent entered into a Stipulated Surrender of License and Order (hereinafter, Stipulated Surrender) with the Medical Board of California (hereinafter, the Board) ''whereby [Respondent] agreed to surrender [his] California state medical license.'' *Id.* According to the OSC, Respondent agreed to the Stipulated Surrender after the Board alleged, *inter alia,* that ''[Respondent] negligently treated three patients, failed to maintain adequate and accurate records, and [was] impaired due to mental illness.'' *Id.* The OSC stated that the Board issued its Decision adopting the Stipulated Surrender on March 22, 2021, with the Decision becoming effective on March 29, 2021. *Id.*

The OSC notified Respondent of the right to request a hearing on the allegations or to submit a written statement, while waiving the right to a hearing, the procedures for electing each option, and the consequences for failing to elect either option. *Id.* at 2–3 (citing 21 CFR 1301.43). The OSC also notified Respondent of the opportunity to submit a corrective action plan. *Id.* at 3 (citing 21 U.S.C. 824(c)(2)(C)).

By letter dated October 12, 2021, Respondent timely requested a hearing.[1] Administrative Law Judge Exhibit (hereinafter, ALJX) 4 (Request for Hearing), at 1. According to the Request for Hearing, ''[Respondent] never agreed to surrender his California DEA license . . . [and] the [Board] didn't make any claim against [Respondent's] DEA license.'' *Id.* at 2. Further, the Request for Hearing states that ''[d]uring [the Board] process [Respondent] denied the allegations against him.'' *Id.* According to the Request for Hearing, ''[n]one of the allegations against [Respondent] were related to drug prescription [sic]'' and ''the patient's [sic] allegations against [Respondent] were made because he refused to prescribe them controlled pain medications.'' *Id.* Finally, the Request for Hearing states that, ''[t]he mental illness claimed by [the Board] was refuted and proved wrong with a psychiatric evaluation performed to [Respondent] after the Board alleged [that] he was mentally ill.'' *Id.*

The Office of Administrative Law Judges put the matter on the docket and assigned it to Administrative Law Judge Paul E. Soeffing (hereinafter, the ALJ). The ALJ issued the Briefing Schedule on October 13, 2021. On October 21, 2021, the Government timely filed its Notice of Filing of Evidence and Motion for Summary Disposition (hereinafter, Government's Motion). Order Granting the Government's Motion for Summary Disposition, and Recommended Rulings, Findings of Fact, Conclusions of Law, and Decision of the Administrative Law Judge (hereinafter, Recommended Decision or RD), at 2. In its Motion, the Government ''request[ed] summary disposition and a recommendation that Respondent's DEA Certificate of Registration as a practitioner be revoked based on his lack of authority to handle controlled substances in the State of California, the state in which he is registered with the DEA.'' Government's Motion, at 5. Respondent did not answer the Government's Motion.[2] He did, however, address the OSC and the Government's allegations in his Request for Hearing. Request for Hearing, at 1–2. I have reviewed and considered the Request for Hearing as part of, and along with, the entire record before me.

The ALJ issued his Recommended Decision on November 2, 2021, granting the Government's Motion and finding that ''[a]s the Respondent does not have authority as a practitioner in California, there is no other fact of consequence for [the] tribunal to decide in order to determine whether or not he is entitled to hold a [DEA registration].'' RD, at 6. Further, the ALJ recommended that Respondent's DEA registration be revoked and that any application to renew or modify his registration and any applications for any other DEA registrations in California be denied ''based on [Respondent's] lack of state authority to practice medicine or handle controlled substances in California.'' *Id.* at 6–7. By letter dated November 29, 2021, the ALJ certified and transmitted the record to me for final Agency action. In the letter, the ALJ advised that no exceptions were filed by either party. Transmittal Letter, at 1.

I issue this Decision and Order based on the entire record before me. 21 CFR 1301.43(e). I make the following findings of fact.

[1] The Request for Hearing was filed on October 13, 2021. Order for Evidence of Lack of State Authority and Directing the Government to File Evidence Regarding the Service of the Order to Show Cause (hereinafter, Briefing Schedule), at 1. I find that the Government's service of the OSC was adequate and that the Request for Hearing was timely filed on October 13, 2021. *See* RD, at n.1.

[2] I find that the Office of Administrative Law Judges properly served Respondent on all occasions. The Certificate of Service for the Government's Motion certifies that the Government served Respondent's counsel at the email address provided in Respondent's Request for Hearing. Request for Hearing, at 1–2.

Findings of Fact

Respondent's DEA Registration

According to Agency records, Respondent is the holder of DEA Certificate of Registration No. BT1734943 at the registered address of 4982 1/2 Field St. San Diego, CA 92110. Pursuant to this registration, Respondent is authorized to dispense controlled substances in schedules II through V as a practitioner. Respondent's registration expired on November 30, 2021.[3]

The Status of Respondent's State License

On January 31, 2020, the Medical Board of California (hereinafter, the Board) issued an Accusation against Respondent. Government Exhibit (hereinafter, GX) 2, Appendix (hereinafter, App.) A, at 10. The Accusation detailed four causes for discipline against Respondent regarding his treatment of three patients, including repeated negligent acts, failure to maintain adequate and accurate records, unprofessional conduct, and violation of the Medical Practice Act. *Id.* at 13–15. The Accusation also stated that Respondent was ''subject to Board action in that his ability to practice medicine safely [was] impaired because he [was] mentally ill, or physically ill, affecting competency.'' *Id.* at 16. According to the Accusation, in or around December 2018, Respondent received a mental examination in which the examining physician ''concluded that Respondent's ability to practice medicine safely [was] impaired due to mental illness.'' *Id.*

On March 18, 2021, the Board issued its Stipulated Surrender of License and Order (hereinafter, Stipulated Surrender). *Id.* at 3 and 8. According to the Stipulated Surrender, ''Respondent [did] not contest that, at an administrative hearing, [the Board] could establish a *prima facie* case with respect to all of the charges and allegations in [the Accusation].'' *Id.* at 5. Further, according to the Stipulated Surrender, ''Respondent further [agreed] that his [California medical license] [was] subject to disciplinary action and [thereby surrendered] his [California medical license] for the Board's formal acceptance.'' *Id.* The Stipulated Surrender ordered Respondent's medical license surrendered and was signed by Respondent and his attorney. *Id.* at 7–8. On March 22, 2021, the Stipulated Surrender was adopted by the Board, effective March 29, 2021.[4] *Id.* at 2.

According to California's online records, of which I take official notice, Respondent's license is still surrendered.[5] Medical Board of California License Verification, *https://www.mbc.ca.gov/License-Verification* (last visited date of signature of this Order). California's online records show that Respondent's medical license remains surrendered and that Respondent is not authorized in California to practice medicine. *Id.*

Accordingly, I find that Respondent is not licensed to engage in the practice of medicine in California, the state in which Respondent is registered with the DEA.

Discussion

Pursuant to 21 U.S.C. 824(a)(3), the Attorney General is authorized to suspend or revoke a registration issued under section 823 of the CSA ''upon a finding that the registrant . . . has had his State license or registration suspended . . . [or] revoked . . . by competent State authority and is no longer authorized by State law to engage in the . . . dispensing of controlled substances.'' With respect to a practitioner, the DEA has also long held that the possession of authority to dispense controlled substances under the laws of the state in which a practitioner engages in professional practice is a fundamental condition for obtaining and maintaining a practitioner's registration. *See, e.g., James L. Hooper, M.D.,* 76 FR 71371 (2011), *pet. for rev. denied,* 481 F. App'x 826 (4th Cir. 2012); *Frederick Marsh Blanton, M.D.,* 43 FR 27616, 27617 (1978).

This rule derives from the text of two provisions of the CSA. First, Congress defined the term ''practitioner'' to mean ''a physician . . . or other person licensed, registered, or otherwise permitted, by . . . the jurisdiction in which he practices . . . , to distribute, dispense, . . . [or] administer . . . a controlled substance in the course of professional practice.'' 21 U.S.C. 802(21). Second, in setting the requirements for obtaining a practitioner's registration, Congress directed that ''[t]he Attorney General shall register practitioners . . . if the applicant is authorized to dispense . . . controlled substances under the laws of the State in which he practices.'' 21 U.S.C. 823(f). Because Congress has clearly mandated that a practitioner possess state authority in order to be deemed a practitioner under the CSA, the DEA has held repeatedly that revocation of a practitioner's registration is the appropriate sanction whenever he is no longer authorized to dispense controlled substances under the laws of the state in which he practices. *See, e.g., James L. Hooper,* 76 FR at 71371–72; *Sheran Arden Yeates, M.D.,* 71 FR 39130, 39131 (2006); *Dominick A. Ricci, M.D.,* 58 FR 51104, 51105 (1993); *Bobby Watts, M.D.,* 53 FR 11919, 11920 (1988); *Frederick Marsh Blanton,* 43 FR at 27617.

According to California statute, ''dispense'' means ''to deliver a controlled substance to an ultimate user or research subject by or pursuant to the lawful order of a practitioner, including the prescribing, furnishing, packaging, labeling, or compounding necessary to prepare the substance for that delivery.'' Cal. Health & Safety Code § 11010 (West, current with urgency legislation through Ch. 770 of 2021 Reg. Sess). Further, a ''practitioner'' means a person ''licensed, registered, or otherwise permitted, to distribute, dispense, conduct research with respect to, or administer, a controlled substance in the course of professional practice or research in this state.'' *Id.* at § 11026(c). Because Respondent is not currently licensed as a physician, or otherwise licensed in California, he is not authorized to dispense controlled substances in California.

Here, the undisputed evidence in the record is that Respondent currently lacks authority to practice medicine in California. As already discussed, a physician must be a licensed practitioner to dispense a controlled substance in California. Thus, because Respondent lacks authority to practice medicine in California and, therefore, is not authorized to handle controlled substances in California, Respondent is not eligible to maintain a DEA registration. Accordingly, I will order

[3] The fact that Respondent allowed his registration to expire during the pendency of an OSC does not impact my jurisdiction or prerogative under the Controlled Substances Act (hereinafter, CSA) to adjudicate the OSC to finality. *Jeffrey D. Olsen, M.D.,* 84 FR 68474 (2019).

[4] On March 30, 2021, the Board issued a correction to a clerical error regarding Respondent's license number in the order adopting the Stipulated Surrender. *See Id.* at 1.

[5] Under the Administrative Procedure Act, an agency ''may take official notice of facts at any stage in a proceeding—even in the final decision.'' United States Department of Justice, Attorney General's Manual on the Administrative Procedure Act 80 (1947) (Wm. W. Gaunt & Sons, Inc., Reprint 1979). Pursuant to 5 U.S.C. 556(e), ''[w]hen an agency decision rests on official notice of a material fact not appearing in the evidence in the record, a party is entitled, on timely request, to an opportunity to show the contrary.'' Accordingly, Registrant may dispute my finding by filing a properly supported motion for reconsideration of finding of fact within fifteen calendar days of the date of this Order. Any such motion and response shall be filed and served by email to the other party and to Office of the Administrator, Drug Enforcement Administration at *dea.addo.attorneys@dea.usdoj.gov.*

that Respondent's DEA registration be revoked.

Order

Pursuant to 28 CFR 0.100(b) and the authority vested in me by 21 U.S.C. 824(a), I hereby revoke DEA Certificate of Registration No. BT1734943 issued to Alex E. Torres. Further, pursuant to 28 CFR 0.100(b) and the authority vested in me by 21 U.S.C. 823(f), I hereby deny any pending application of Alex E. Torres to renew or modify this registration, as well as any other pending application of Alex E. Torres for additional registration in California. This Order is effective February 22, 2022.

Anne Milgram,

Administrator.

[FR Doc. 2022–01109 Filed 1–20–22; 8:45 am]

BILLING CODE 4410–09–P

DEPARTMENT OF LABOR

Office of the Secretary

Report to Congress and the Office of Management and Budget Regarding the Review Financial Assistance and the Requirements of Buy America

ACTION: Notice of report.

SUMMARY: The report indicates that the Department has not identified any programs that are inconsistent with Buy America requirements of section 70914 of the Act. The report identifies the YouthBuild program as the only Federal financial assistance program related to infrastructure and notes that the grant agreements for that program include the Buy America requirements.

DATES: The Acting Chief Financial Officer approved this report on January 14, 2022.

FOR FURTHER INFORMATION CONTACT: Dylan Sacchetti, 202.693.8105 or at 200 Constitution Ave. NW, Room S–4205, Washington, DC 20210.

SUPPLEMENTARY INFORMATION: The ''Build America, Buy America Act,'' which was included in the Infrastructure Investment and Jobs Act (the Act) (Pub. L. 117–58), requires under section 70913 that each Federal agency submit a report to the Office of Management and Budget (OMB) and to Congress, and publish it in the **Federal Register**, within 60 days of its enactment. In the report, Federal agencies are required to:

(1) Identify and evaluate all infrastructure programs to determine whether a program is inconsistent with section 70914 of the Act;

(2) identify all domestic content procurement preferences applicable to the Federal financial assistance program related to infrastructure;

(3) assess the applicability of the domestic content procurement preference requirements, including: (A) Section 313 of title 23, United States Code; (B) section 5323(j) of title 49, United States Code; (C) section 22905(a) of title 49, United States Code; (D) section 50101 of title 49, United States Code; (E) section 603 of the Federal Water Pollution Control Act (33 U.S.C. 1388); (F) section 1452(a)(4) of the Safe Drinking Water Act (42 U.S.C. 300j–12(a)(4)); (G) section 5035 of the Water Infrastructure Finance and Innovation Act of 2014 (33 U.S.C. 3 3914); (H) any domestic content procurement preference included in an appropriations Act; and (I) any other domestic content procurement preference in Federal law (including regulations);

(4) provide details on any applicable domestic content procurement preference requirement, including the purpose, scope, applicability, and any exceptions and waivers issued under the requirement; and

(5) include a description of the type of infrastructure projects that receive funding under the program, including information relating to: (A) The number of entities that are participating in the program; (B) the amount of Federal funds that are made available for the program for each fiscal year; and (C) any other information the head of the Federal agency determines to be relevant.

Report

The Department of Labor (the Department) did not receive appropriated funds under the Infrastructure Investment and Jobs Act (the Act).

The Department reviewed its infrastructure programs and has not identified any programs that are inconsistent with section 70914 of the Act.

The Department identified YouthBuild as a Federal financial assistance program related to infrastructure. YouthBuild is a youth training program that provides training and educational services to youth (16–24 years old) using construction and other techniques. This program receives approximately $90 million in annual funding. The Department's Employment and Training Administration awards approximately 65–80 grants each year. A small percentage of the funds is used by recipients to purchase building supplies for building and/or refurbishing houses. Since at least 2014, grant agreements for this program have contained the domestic content procurement preference requirement (*i.e.,* the Buy American requirement.)

The Department applies the domestic content procurement preference requirement for YouthBuild, by including the following term in all grant agreements:

Pursuant to E.O. 14005, Ensuring the Future Is Made in All of America by All of America's Workers, the grant award recipient agrees to comply with all applicable Made in America Laws (as defined in the E.O.), including the Buy American Act at 41 U.S.C. 8301–8305. For the purposes of this award, the grant recipient is required to maximize the use of goods, products, and materials produced in, and services offered in, the United States, in accordance with the Made in America Laws. No funds may be made available to any person or entity (including as a contractor or subrecipient of the grant recipient) that has been found to be in violation of any Made in America Laws. ''Made in America Laws'' means all statutes, regulations, rules, and Executive Orders relating to Federal financial assistance awards or Federal procurement, including those that refer to ''Buy America'' or ''Buy American,'' that require, or provide a preference for, the purchase or acquisition of goods, products, or materials produced in the United States, including iron, steel, and manufactured goods offered in the United States. Made in America Laws include laws requiring domestic preference for maritime transport, including the Merchant Marine Act of 1920 (Pub. L. 66–261), also known as the Jones Act.

The Department does not have any additional information to provide relating to domestic content procurement preference requirements, including the purpose, scope, applicability and any exceptions and waivers issued under the requirement.

Signed on this day at Washington, DC, on this 14th day of January, 2022.

Kevin L. Brown,

Deputy Chief Financial Officer.

[FR Doc. 2022–01121 Filed 1–20–22; 8:45 am]

BILLING CODE 4510–7C–P

DEPARTMENT OF LABOR

Agency Information Collection Activities; Submission for OMB Review; Comment Request; Request for Information on Earnings, Dual Benefits, Dependents and Third Party Settlement, CA–1032

ACTION: Notice of availability; request for comments.

SUMMARY: The Department of Labor (DOL) is submitting this Office of Workers' Compensation Program (OWCP)-sponsored information collection request (ICR) to the Office of Management and Budget (OMB) for review and approval in accordance with the Paperwork Reduction Act of 1995 (PRA). Public comments on the ICR are invited.

DATES: The OMB will consider all written comments that agency receives on or before February 22, 2022.

ADDRESSES: Written comments and recommendations for the proposed information collection should be sent within 30 days of publication of this notice to *www.reginfo.gov/public/do/PRAMain.* Find this particular information collection by selecting ''Currently under 30-day Review—Open for Public Comments'' or by using the search function.

Comments are invited on: (1) Whether the collection of information is necessary for the proper performance of the functions of the Department, including whether the information will have practical utility; (2) if the information will be processed and used in a timely manner; (3) the accuracy of the agency's estimates of the burden and cost of the collection of information, including the validity of the methodology and assumptions used; (4) ways to enhance the quality, utility and clarity of the information collection; and (5) ways to minimize the burden of the collection of information on those who are to respond, including the use of automated collection techniques or other forms of information technology.

FOR FURTHER INFORMATION CONTACT: Nora Hernandez by telephone at 202–693–8633 or by email at *DOL_PRA_PUBLIC@dol.gov.*

SUPPLEMENTARY INFORMATION: Form CA–1032 is used to obtain information from claimants receiving compensation for an extended period of time. This information is necessary to ensure that compensation being paid is correct. For additional substantive information about this ICR, see the related notice published in the **Federal Register** on June 7, 2021 (86 FR 30335).

This information collection is subject to the PRA. A Federal agency generally cannot conduct or sponsor a collection of information, and the public is generally not required to respond to an information collection, unless the OMB approves it and displays a currently valid OMB Control Number. In addition, notwithstanding any other provisions of law, no person shall generally be subject to penalty for failing to comply with a collection of information that does not display a valid OMB Control Number. *See* 5 CFR 1320.5(a) and 1320.6.

DOL seeks PRA authorization for this information collection for three (3) years. OMB authorization for an ICR cannot be for more than three (3) years without renewal. The DOL notes that information collection requirements submitted to the OMB for existing ICRs receive a month-to-month extension while they undergo review.

Agency: DOL–OWCP.

Title of Collection: Request for Information on Earnings, Dual Benefits, Dependents and Third Party Settlement, CA–1032.

OMB Control Number: 1240–0016.

Affected Public: Individuals or Households.

Total Estimated Number of Respondents: 37,056.

Total Estimated Number of Responses: 37,056.

Total Estimated Annual Time Burden: 12,228 hours.

Total Estimated Annual Other Costs Burden: $15,030.

Authority: 44 U.S.C. 3507(a)(1)(D).

Nora Hernandez,

Department Clearance Officer.

[FR Doc. 2022–01129 Filed 1–20–22; 8:45 am]

BILLING CODE 4510–CH–P

DEPARTMENT OF LABOR

Bureau of Labor Statistics

Information Collection Activities; Comment Request

AGENCY: Bureau of Labor Statistics, Department of Labor.

ACTION: Notice of information collection; request for comment.

SUMMARY: The Department of Labor, as part of its continuing effort to reduce paperwork and respondent burden, conducts a pre-clearance consultation program to provide the general public and Federal agencies with an opportunity to comment on proposed and/or continuing collections of information in accordance with the Paperwork Reduction Act of 1995. This program helps to ensure that requested data can be provided in the desired format, reporting burden (time and financial resources) is minimized, collection instruments are clearly understood, and the impact of collection requirements on respondents can be properly assessed. The Bureau of Labor Statistics (BLS) is soliciting comments concerning the proposed extension of the ''International Training Application.'' A copy of the proposed information collection request can be obtained by contacting the individual listed below in the Addresses section of this notice.

DATES: Written comments must be submitted to the office listed in the Addresses section of this notice on or before March 22, 2022.

ADDRESSES: Send comments to Erin Good, BLS Clearance Officer, Division of Management Systems, Bureau of Labor Statistics, Room 4080, 2 Massachusetts Avenue NE, Washington, DC 20212. Written comments also may be transmitted by email to *BLS_PRA_Public@bls.gov.*

FOR FURTHER INFORMATION CONTACT: Erin Good, BLS Clearance Officer, at 202–691–7628 (this is not a toll free number). (See **ADDRESSES** section.)

SUPPLEMENTARY INFORMATION:

I. Background

The BLS is one of the largest labor statistics organizations in the world and has provided international training since 1945. Each year, the BLS Division of International Technical Cooperation (DITC) conducts seminars of 1 to 2 weeks duration at its training facilities in Washington, DC. In addition to the annual international seminars, DITC provides technical assistance upon request and organizes visits to the BLS for many international visitors each year. The seminars bring together statisticians, economists, analysts, and other data producers and users from countries all over the world. Each seminar is designed to strengthen the participants' ability to collect and analyze economic and labor statistics.

II. Current Action

Office of Management and Budget clearance is being sought for the proposed extension of the International Training Application. Continuing the existing collection will allow the BLS to continue to conduct international seminars. No questions have been added or deleted on the form since the last Office of Management and Budget approval.

III. Desired Focus of Comments

The Bureau of Labor Statistics is particularly interested in comments that:

- Evaluate whether the proposed collection of information is necessary for the proper performance of the functions of the agency, including whether the information will have practical utility.
- Evaluate the accuracy of the agency's estimate of the burden of the proposed collection of information, including the validity of the methodology and assumptions used.
- Enhance the quality, utility, and clarity of the information to be collected.
- Minimize the burden of the collection of information on those who are to respond, including through the use of appropriate automated, electronic, mechanical, or other technological collection techniques or other forms of information technology, *e.g.,* permitting electronic submissions of responses.

Title of Collection: International Training Application.

OMB Number: 1220–0179.

Type of Review: Extension.

Affected Public: Individuals or Households.

Total Respondents: 100.

Frequency: On occasion.

Total Responses: 100.

Average Time per Response: 20 minutes.

Estimated Total Burden Hours: 34 hours.

Comments submitted in response to this notice will be summarized and/or included in the request for Office of Management and Budget approval of the information collection request; they also will become a matter of public record.

Signed at Washington, DC, on January 14, 2022.

Eric Molina,

Acting Chief, Division of Management Systems.

[FR Doc. 2022–01134 Filed 1–20–22; 8:45 am]

BILLING CODE 4510–24–P

DEPARTMENT OF LABOR

Mine Safety and Health Administration

[OMB Control No. 1219–0095]

Proposed Extension of Information Collection; Explosive Materials and Blasting Units (Pertains Only to Underground Metal and Category III Nonmetal Mines Deemed To Be Gassy)

AGENCY: Mine Safety and Health Administration, Labor.

ACTION: Request for public comments.

SUMMARY: The Department of Labor, as part of its continuing effort to reduce paperwork and respondent burden, conducts a pre-clearance request for comment to provide the general public and Federal agencies with an opportunity to comment on proposed collections of information in accordance with the Paperwork Reduction Act of 1995. This request helps to ensure that: Requested data can be provided in the desired format; reporting burden (time and financial resources) is minimized; collection instruments are clearly understood; and the impact of collection requirements on respondents can be properly assessed. Currently, the Mine Safety and Health Administration (MSHA) is soliciting comments on the information collection for Explosive Materials and Blasting Units (pertains only to underground metal and Category III nonmetal mines deemed to be gassy).

DATES: All comments must be received on or before March 22, 2022.

ADDRESSES: You may submit comments as follows. Please note that late comments will not be considered.

Electronic Submissions: Submit electronic comments in the following way:

- *Federal eRulemaking Portal: https://www.regulations.gov.* Follow the instructions for submitting comments for MSHA–2021–0041. Comments submitted electronically, including attachments, to *https://www.regulations.gov* will be posted to the docket, with no changes. Because your comment will be made public, you are responsible for ensuring that your comment does not include any confidential information that you or a third party may not wish to be posted, such as your or anyone else's Social Security number or confidential business information.
- If your comment includes confidential information that you do not wish to be made available to the public, submit the comment as a written/paper submission.

Written/Paper Submissions: Submit written/paper submissions in the following way:

- *Mail/Hand Delivery:* Mail or visit DOL–MSHA, Office of Standards, Regulations, and Variances, 201 12th Street South, Suite 4E401, Arlington, VA 22202–5452. Before visiting MSHA in person, call 202–693–9455 to make an appointment, in keeping with the Department of Labor's COVID–19 policy. Special health precautions may be required.
- MSHA will post your comment as well as any attachments, except for information submitted and marked as confidential, in the docket at *https://www.regulations.gov.*

FOR FURTHER INFORMATION CONTACT: S. Aromie Noe, Acting Director, Office of Standards, Regulations, and Variances, MSHA, at *MSHA.information.collections@dol.gov* (email); (202) 693–9440 (voice); or (202) 693–9441 (facsimile).

SUPPLEMENTARY INFORMATION:

I. Background

Section 103(h) of the Federal Mine Safety and Health Act of 1977 (Mine Act), 30 U.S.C. 813(h), authorizes MSHA to collect information necessary to carry out its duty in protecting the safety and health of miners. Further, section 101(a) of the Mine Act, 30 U.S.C. 811(a), authorizes the Secretary of Labor to develop, promulgate, and revise as may be appropriate, improved mandatory health or safety standards for the protection of life and prevention of injuries in coal or other mines.

Under 30 CFR parts 7 and 15, MSHA evaluates and approves explosive materials and blasting units as permissible for use in mines. However, some underground metal and nonmetal Category III mines (gassy mines) use non-approved explosive materials or blasting units because there are no approved explosive materials and blasting units.

II. Desired Focus of Comments

MSHA is soliciting comments concerning the proposed information collection related to Explosive Materials and Blasting Units (pertains only to underground metal and Category III nonmetal mines deemed to be gassy). MSHA is particularly interested in comments that:

- Evaluate whether the collection of information is necessary for the proper performance of the functions of the Agency, including whether the information has practical utility;
- Evaluate the accuracy of MSHA's estimate of the burden related to the information collection, including the validity of the methodology and assumptions used in the estimate;
- Suggest methods to enhance the quality, utility, and clarity of the information to be collected; and
- Minimize the burden of the information collection on those who are to respond, including through the use of appropriate automated, electronic, mechanical, or other technological collection techniques or other forms of information technology, *e.g.,* permitting electronic submission of responses.

Background documents related to this information collection request are

available at *https://regulations.gov* and at DOL–MSHA located at 201 12th Street South, Suite 4E401, Arlington, VA 22202–5452. Questions about the information collection requirements may be directed to the person listed in the **FOR FURTHER INFORMATION** section of this notice.

III. Current Actions

This information collection request concerns provisions for explosive materials and blasting units that pertain only to underground metal and Category III nonmetal mines deemed to be gassy. MSHA has updated the data with respect to the number of respondents, responses, burden hours, and burden costs supporting this information collection request from the previous information collection request.

Type of Review: Extension, without change, of a currently approved collection.

Agency: Mine Safety and Health Administration.

OMB Number: 1219–0095.

Affected Public: Business or other for-profit.

Number of Respondents: 1.

Frequency: On occasion.

Number of Responses: 1.

Annual Burden Hours: 1 hours.

Annual Respondent or Recordkeeper Cost: $6.

Comments submitted in response to this notice will be summarized in the request for Office of Management and Budget approval of the proposed information collection request; they will become a matter of public record and will be available at *https://www.reginfo.gov.*

Song-ae Aromie Noe,

Certifying Officer.

[FR Doc. 2022–01126 Filed 1–20–22; 8:45 am]

BILLING CODE 4510–43–P

DEPARTMENT OF LABOR

Mine Safety and Health Administration

[OMB Control No. 1219–0131]

Proposed Extension of Information Collection; Training Plans, New Miner Training, Newly-Hired Experienced Miner Training

AGENCY: Mine Safety and Health Administration, Labor.

ACTION: Request for public comments.

SUMMARY: The Department of Labor, as part of its continuing effort to reduce paperwork and respondent burden, conducts a pre-clearance request for comment to provide the general public and Federal agencies with an opportunity to comment on proposed collections of information in accordance with the Paperwork Reduction Act of 1995. This request helps to ensure that: Requested data can be provided in the desired format; reporting burden (time and financial resources) is minimized; collection instruments are clearly understood; and the impact of collection requirements on respondents can be properly assessed. Currently, the Mine Safety and Health Administration (MSHA) is soliciting comments on the information collection for Training Plans, New Miner Training, and Newly-hired Experienced Miner Training.

DATES: All comments must be received on or before March 22, 2022.

ADDRESSES: You may submit comments as follows. Please note that late comments will not be considered.

Electronic Submissions: Submit electronic comments in the following way:

- *Federal eRulemaking Portal: https://www.regulations.gov.* Follow the instructions for submitting comments for MSHA–2021–0042. Comments submitted electronically, including attachments, to *https://www.regulations.gov* will be posted to the docket, with no changes. Because your comment will be made public, you are responsible for ensuring that your comment does not include any confidential information that you or a third party may not wish to be posted, such as your or anyone else's Social Security number or confidential business information.
- If your comment includes confidential information that you do not wish to be made available to the public, submit the comment as a written/paper submission.

Written/Paper Submissions: Submit written/paper submissions in the following way:

- *Mail/Hand Delivery:* Mail or visit DOL–MSHA, Office of Standards, Regulations, and Variances, 201 12th Street South, Suite 4E401, Arlington, VA 22202–5452. Before visiting MSHA in person, call 202–693–9455 to make an appointment, in keeping with the Department of Labor's COVID–19 policy. Special health precautions may be required.
- MSHA will post your comment as well as any attachments, except for information submitted and marked as confidential, in the docket at *https://www.regulations.gov.*

FOR FURTHER INFORMATION CONTACT: S. Aromie Noe, Acting Director, Office of Standards, Regulations, and Variances, MSHA, at *MSHA.information.collections@dol.gov* (email); (202) 693–9440 (voice); or (202) 693–9441 (facsimile).

SUPPLEMENTARY INFORMATION:

I. Background

Section 103(h) of the Federal Mine Safety and Health Act of 1977 (Mine Act), 30 U.S.C. 813(h), authorizes MSHA to collect information necessary to carry out its duty in protecting the safety and health of miners. Further, section 101(a) of the Mine Act, 30 U.S.C. 811(a), authorizes the Secretary of Labor to develop, promulgate, and revise as may be appropriate, improved mandatory health or safety standards for the protection of life and prevention of injuries in coal or other mines.

Training informs miners of safety and health hazards inherent in the workplace and enables them to identify and avoid such hazards. Training becomes even more important in light of certain conditions that can exist when production demands increase, such as an influx of new and less experienced miners and mine operators; longer work hours to meet production demands; and increased demand for contractors who may be less familiar with the dangers on mine property.

MSHA's safety and health training requirements ensure that all miners receive the required training, which would result in a decrease in accidents, injuries, and fatalities. The information obtained from mine operators is used by MSHA during inspections to determine compliance with the requirements concerning the training and retraining of miners engaged in shell dredging, or employed at sand, gravel, surface stone, surface clay, colloidal phosphate, and surface limestone mines.

II. Desired Focus of Comments

MSHA is soliciting comments concerning the proposed information collection related to Training Plans, New Miner Training, and Newly-hired Experienced Miner Training. MSHA is particularly interested in comments that:

- Evaluate whether the collection of information is necessary for the proper performance of the functions of the Agency, including whether the information has practical utility;
- Evaluate the accuracy of MSHA's estimate of the burden related to the information collection, including the validity of the methodology and assumptions used in the estimate;
- Suggest methods to enhance the quality, utility, and clarity of the information to be collected; and
- Minimize the burden of the information collection on those who are

to respond, including through the use of appropriate automated, electronic, mechanical, or other technological collection techniques or other forms of information technology, *e.g.,* permitting electronic submission of responses.

Background documents related to this information collection request are available at *https://regulations.gov* and at DOL–MSHA located at 201 12th Street South, Suite 4E401, Arlington, VA 22202–5452. Questions about the information collection requirements may be directed to the person listed in the **FOR FURTHER INFORMATION CONTACT** section of this notice.

III. Current Actions

This information collection request concerns provisions for training plans, new miner training, and newly-hired experienced miner training. MSHA has updated the data with respect to the number of respondents, responses, burden hours, and burden costs supporting this information collection request from the previous information collection request.

Type of Review: Extension, without change, of a currently approved collection.

Agency: Mine Safety and Health Administration.

OMB Number: 1219–0131.

Affected Public: Business or other for-profit.

Number of Respondents: 10,996.

Frequency: On occasion.

Number of Responses: 1,135,343.

Annual Burden Hours: 155,965 hours.

Annual Respondent or Recordkeeper Cost: $348,531.

MSHA Forms: Electronic Training Plan Advisor.

Comments submitted in response to this notice will be summarized in the request for Office of Management and Budget approval of the proposed information collection request; they will become a matter of public record and will be available at *https://www.reginfo.gov.*

Song-ae Aromie Noe,

Certifying Officer.

[FR Doc. 2022–01127 Filed 1–20–22; 8:45 am]

BILLING CODE 4510–43–P

DEPARTMENT OF LABOR

Occupational Safety and Health Administration

[Docket No. OSHA–2006–0028]

MET Laboratories, Inc.: Applications for Expansion of Recognition

AGENCY: Occupational Safety and Health Administration (OSHA), Labor.

ACTION: Notice.

SUMMARY: In this notice, OSHA announces the applications of MET Laboratories, Inc., for expansion of the recognition as a Nationally Recognized Testing Laboratory (NRTL) and presents the agency's preliminary finding to grant the applications.

DATES: Submit comments, information, and documents in response to this notice, or requests for an extension of time to make a submission, on or before February 7, 2022.

ADDRESSES: Submit comments by any of the following methods:

Electronically: Submit comments and attachments electronically at *https://www.regulations.gov,* which is the Federal eRulemaking Portal. Follow the instructions online for making electronic submissions.

Docket: To read or download submissions or other material in the docket, go to *https://www.regulations.gov* or the OSHA Docket Office at the above address. All documents in the docket are listed in the *https://www.regulations.gov* index; however, some information (*e.g.,* copyrighted material) is not publicly available to read or download through the website. All submissions, including copyrighted material, are available for inspection at the OSHA Docket Office. Contact the OSHA Docket Office at (202) 693–2350 (TTY (877) 889–5627) for assistance in locating docket submissions.

Instructions: All submissions must include the agency name and the OSHA docket number (OSHA–2006–0028). OSHA places comments and other materials, including any personal information, in the public docket without revision, and these materials will be available online at *http://www.regulations.gov.* Therefore, the agency cautions commenters about submitting statements they do not want made available to the public, or submitting comments that contain personal information (either about themselves or others) such as Social Security numbers, birth dates, and medical data. For further information on submitting comments, see the ''Public Participation'' heading in the section of this notice titled **SUPPLEMENTARY INFORMATION**.

Extension of comment period: Submit requests for an extension of the comment period on or before February 7, 2022 to the Office of Technical Programs and Coordination Activities, Directorate of Technical Support and Emergency Management, Occupational Safety and Health Administration, U.S. Department of Labor by fax to (202) 693–1644.

FOR FURTHER INFORMATION CONTACT: Information regarding this notice is available from the following sources:

Press inquiries: Contact Mr. Frank Meilinger, Director, OSHA Office of Communications, phone: (202) 693–1999 or email: *meilinger.francis2@dol.gov.*

General and technical information: Contact Mr. Kevin Robinson, Director, Office of Technical Programs and Coordination Activities, Directorate of Technical Support and Emergency Management, Occupational Safety and Health Administration, phone: (202) 693–2110 or email: *robinson.kevin@dol.gov.*

SUPPLEMENTARY INFORMATION:

I. Notice of the Application for Expansion

The Occupational Safety and Health Administration is providing notice that MET Laboratories, Inc. (MET), is applying for expansion of the current recognition as a NRTL. MET requests the addition of four test standards to the NRTL scope of recognition.

OSHA recognition of a NRTL signifies that the organization meets the requirements specified in 29 CFR 1910.7. Recognition is an acknowledgment that the organization can perform independent safety testing and certification of the specific products covered within the scope of recognition. Each NRTL's scope of recognition includes (1) the type of products the NRTL may test, with each type specified by the applicable test standard; and (2) the recognized site(s) that has/have the technical capability to perform the product-testing and product-certification activities for test standards within the NRTL's scope. Recognition is not a delegation or grant of government authority; however, recognition enables employers to use products approved by the NRTL to meet OSHA standards that require product testing and certification.

The agency processes applications by a NRTL for initial recognition and for an expansion or renewal of this recognition, following requirements in Appendix A to 29 CFR 1910.7. This appendix requires that the agency publish two notices in the **Federal Register** in processing an application. In the first notice, OSHA announces the application and provides a preliminary finding. In the second notice, the agency provides a final decision on the application. These notices set forth the NRTL's scope of recognition or modifications of that scope. OSHA maintains an informational web page for

each NRTL, including MET, which details the NRTL's scope of recognition. These pages are available from the OSHA website at *https://www.osha.gov/dts/otpca/nrtl/index.html.*

MET currently has one facility (site) recognized by OSHA for product testing and certification, with its headquarters located at: MET Laboratories, Inc., 914 West Patapsco Avenue, Baltimore, Maryland 21230. A complete list of MET's scope of recognition is available at *https://www.osha.gov/dts/otpca/nrtl/met.html.*

II. General Background on the Applications

MET submitted four applications, one dated January 14, 2019 (OSHA–2006–0028–0075), the second, dated July 30, 2019 (OSHA–2006–0028–0076), which was amended on July 29, 2020 (OSHA–2006–0028–0079). The third and fourth applications were received on August 13, 2019 (OSHA–2006–0028–0077) and (OSHA–2006–0028–0078). Together, the expansion applications would add four additional test standards to MET's NRTL recognition. OSHA staff performed a detailed analysis of the application packets and reviewed other pertinent information. OSHA did not perform any on-site reviews in relation to these applications.

Table 1 below, lists the appropriate test standards found in MET's applications for expansion for testing and certification of products under the NRTL Program.

TABLE 1—PROPOSED APPROPRIATE TEST STANDARDS FOR INCLUSION IN MET'S NRTL SCOPE OF RECOGNITION

Test standard	Test standard title
UL 60079–28	Explosive Atmospheres—Part 28: Protection of Equipment and transmission Systems Using Optical Radiation.
TIA 4950	Requirements for Battery—Powered, Portable Land Mobile Radio Applications in Class I, II, and III, Division 1, Hazardous (Classified) Locations.
UL 551	Transformer Type Arc—Welding Machines.
UL 1004–1	Rotating Electrical Machines.

In reviewing the expansion applications, OSHA discovered that the standard TIA 4950 had been revised in May 2014 (Revision A) and July 2020 (Revision B). OSHA examined these revisions and preliminarily determined that they are not substantive in nature. Therefore, OSHA has preliminarily determined that the current version of TIA 4950 (Revision B) remains an appropriate test standard under the NRTL Program Regulation, 29 CFR 1910.7, and that OSHA need not reevaluate the recognition of any NRTLs currently recognized for TIA 4950. Moreover, although MET's expansion application sought recognition for TIA 4950A only, and not TIA 4950B (see OSHA–2006–0028–0076; OSHA–2006–0028–0079), OSHA preliminarily concludes that MET's application for expansion, if granted, will include recognition for the current version of TIA 4950 (again, because any changes made in Revision B are not substantive). OSHA welcomes comment on these determinations.

III. Preliminary Findings on the Applications

MET submitted acceptable applications for expansion of the scope of recognition. OSHA's review of the application files, and pertinent documentation, indicate that MET can meet the requirements prescribed by 29 CFR 1910.7 for expanding the recognition to include the addition of these four test standards for NRTL testing and certification listed in Table 2. This preliminary finding does not constitute an interim or temporary approval of MET's applications.

OSHA welcomes public comment as to whether MET meets the requirements of 29 CFR 1910.7 for expansion of the recognition as a NRTL. Comments should consist of pertinent written documents and exhibits. Commenters needing more time to comment must submit a request in writing, stating the reasons for the request. Commenters must submit the written request for an extension by the due date for comments. OSHA will limit any extension to 10 days unless the requester justifies a longer period. OSHA may deny a request for an extension if the request is not adequately justified. To obtain or review copies of the exhibits identified in this notice, as well as comments submitted to the docket, contact the Docket Office, at the above address. These materials also are available online at *https://www.regulations.gov* under Docket No. OSHA–2006–0028.

OSHA staff will review all comments to the docket submitted in a timely manner and, after addressing the issues raised by these comments, will make a recommendation to the Assistant Secretary for Occupational Safety and Health whether to grant MET's applications for expansion of the scope of recognition. The Assistant Secretary will make the final decision on granting the applications. In making this decision, the Assistant Secretary may undertake other proceedings prescribed in Appendix A to 29 CFR 1910.7.

OSHA will publish a public notice of the final decision in the **Federal Register**.

IV. Authority and Signature

Douglas L. Parker, Assistant Secretary of Labor for Occupational Safety and Health, authorized the preparation of this notice. Accordingly, the agency is issuing this notice pursuant to Section 29 U.S.C. 657(g)(2), Secretary of Labor's Order No. 8–2020 (85 FR 58393; Sept. 18, 2020), and 29 CFR 1910.7.

Signed at Washington, DC, on January 12, 2022.

Douglas L. Parker,

Assistant Secretary of Labor for Occupational Safety and Health.

[FR Doc. 2022–01130 Filed 1–20–22; 8:45 am]

BILLING CODE 4510–26–P

DEPARTMENT OF LABOR

Occupational Safety and Health Administration

[Docket No. OSHA–2022–0001]

Advisory Committee on Construction Safety and Health (ACCSH)

AGENCY: Occupational Safety and Health Administration (OSHA), Labor.

ACTION: Request for Nominations for Employee Representative on the Advisory Committee on Construction Safety and Health (ACCSH).

SUMMARY: The Secretary of Labor requests nominations for an employee representative on ACCSH.

DATES: Submit (postmark, send, transmit) nominations for ACCSH membership by February 22, 2022.

ADDRESSES: You may submit nominations and supporting materials by the following method:

Electronically: You may submit nominations, including attachments, electronically into Docket No. OSHA–2022–0001 at *http://www.regulations.gov,* which is the Federal eRulemaking Portal. Follow the online instructions for submissions.

Docket: To read or download comments or other material in the docket, go to *http://www.regulations.gov.* Documents in the docket are listed in the *http://www.regulations.gov* index; however, some information (*e.g.,* copyrighted material) is not publicly available to read or download through the website. All submissions, including copyrighted material, are available for inspection through the OSHA Docket Office. Contact the OSHA Docket Office at (202) 693–2350 (TTY (877) 889–5627) for assistance in locating docket submissions.

Instructions: All submissions must include the agency name and the OSHA docket number for this **Federal Register** notice (OSHA–2022–0001). OSHA will post all submissions, including personal information, in the public docket, which may be available online. Therefore, OSHA cautions interested parties about submitting personal information such as Social Security numbers and birthdates. For further information on submitting comments, see the ''Submission requirements'' heading in the section of this notice titled **SUPPLEMENTARY INFORMATION**.

FOR FURTHER INFORMATION CONTACT:

For press inquiries: Mr. Frank Meilinger, Director, OSHA Office of Communications; telephone: (202) 693–1999; email: *meilinger.francis2@dol.gov.*

For general information about ACCSH and ACCSH membership: Mr. Damon Bonneau, OSHA, Directorate of Construction; telephone: (202) 693–2020; email: *bonneau.damon@dol.gov.*

*Copies of this **Federal Register** document:* Electronic copies of this **Federal Register** document are available at *http://www.regulations.gov.* This document, as well as news releases and other relevant information are also available on the OSHA web page at *http://www.osha.gov.*

SUPPLEMENTARY INFORMATION: The Secretary of Labor invites interested persons to submit nominations to fill one membership position for an Employee Representative on the Advisory Committee on Construction Safety and Health (ACCSH).

A. Background

ACCSH advises the Secretary of Labor and the Assistant Secretary of Labor for Occupational Safety and Health (Assistant Secretary) in the formulation of standards affecting the construction industry, and on policy matters arising in the administration of the safety and health provisions under the Contract Work Hours and Safety Standards Act (Construction Safety Act (CSA)) (40 U.S.C. 3701 *et seq.*) and the Occupational Safety and Health Act of 1970 (OSH Act) (29 U.S.C. 651 *et seq.*) (see also 29 CFR 1911.10 and 1912.3). In addition, the CSA and OSHA regulations require the Assistant Secretary to consult with ACCSH before the agency proposes any occupational safety and health standard affecting construction activities (40 U.S.C. 3704; 29 CFR 1911.10).

ACCSH operates in accordance with the Federal Advisory Committee Act (FACA), as amended (5 U.S.C. App. 2), and the implementing regulations (41 CFR 102–3 *et seq.*); and Department of Labor Manual Series Chapter 1–900 (8/31/2020). ACCSH generally meets two to four times a year.

B. ACCSH Membership

ACCSH consists of 15 members whom the Secretary appoints. ACCSH members generally serve staggered two-year terms, unless they resign, cease to be qualified, become unable to serve, or the Secretary removes them (29 CFR 1912.3(e)). The Secretary may appoint ACCSH members to successive terms. No member of ACCSH, other than members who represent employers or employees, shall have an economic interest in any proposed rule that affects the construction industry (29 CFR 1912.6).

The categories of ACCSH membership are:

- Five members who are qualified by experience and affiliation to present the viewpoint of employers in the construction industry;
- Five members who are similarly qualified to present the viewpoint of employees in the construction industry;
- Two representatives of State safety and health agencies;
- Two public members, qualified by knowledge and experience to make a useful contribution to the work of ACCSH, such as those who have professional or technical experience and competence with occupational safety and health in the construction industry; and
- One representative designated by the Secretary of the Department of Health and Human Services and appointed by the Secretary.

With this notice, OSHA is seeking to fill one vacant Employee Representative position. The Department of Labor is committed to equal opportunity in the workplace and seeks broad-based and diverse ACCSH membership. Any interested person or organization may self-nominate or nominate one or more other individuals for membership on ACCSH. Interested persons also are invited and encouraged to submit statements in support of nominees.

C. Submission Requirements

Nominations must include the following information:

- Nominee's contact information and current employment or position;
- Nominee's résumé or curriculum vitae, including prior membership on ACCSH and other relevant organizations and associations;
- A summary of the background, experience, and qualifications that addresses the nominee's suitability for nomination as an Employee Representative;
- Articles or other documents the nominee has authored that indicate the nominee's knowledge, experience, and expertise in occupational safety and health, particularly as it pertains to the construction industry; and
- A statement that the nominee is aware of the nomination, is willing to regularly attend and participate in ACCSH meetings, and has no conflicts of interest that would preclude membership on ACCSH.

D. Member Selection

The Secretary will select the ACCSH member on the basis of their experience, knowledge, and competence in the field of occupational safety and health, particularly as it pertains to the construction industry. Information received through this nomination process, in addition to other relevant sources of information, will assist the Secretary in making this appointment to ACCSH. The Secretary will consider individuals nominated in response to this **Federal Register** document, as well as other qualified individuals, in selecting members to ACCSH.

Authority and Signature

Douglas L. Parker, Assistant Secretary of Labor for Occupational Safety and Health, authorized the preparation of this notice under the authority granted by 29 U.S.C. 655(b)(1) and 656(b), 40 U.S.C. 3704(a)(2), 5 U.S.C. App. 2, Secretary of Labor's Order No. 8–2020 (85 FR 58393), and 29 CFR part 1912.

Signed at Washington, DC, on January 13, 2022.

Douglas L. Parker,

Assistant Secretary of Labor for Occupational Safety and Health.

[FR Doc. 2022–01131 Filed 1–20–22; 8:45 am]

BILLING CODE 4510–26–P

MILLENNIUM CHALLENGE CORPORATION

[MCC FR 22–01]

Notice of First Amendment to Compact With the Republic of Niger

AGENCY: Millennium Challenge Corporation.

ACTION: Notice.

SUMMARY: In accordance with the Millennium Challenge Act of 2003, as amended, the Millennium Challenge Corporation is publishing a summary, justification, and full text of the proposed First Amendment to Millennium Challenge Compact between the United States of America, acting through the Millennium Challenge Corporation, and the Republic of Niger, acting through the Ministry in Charge of Foreign Affairs and Cooperation. Representatives of the United States Government and the Government of Niger plan to conclude the Amendment in January 2022.

(Authority: 22 U.S.C. 7708(i) (2))

Dated: January 14, 2022.

Thomas G. Hohenthaner,

Acting VP/General Counsel and Corporate Secretary.

Summary of First Amendment to Millennium Challenge Compact With the Republic of Niger

The Board of Directors of the Millennium Challenge Corporation (''*MCC*'') has approved an amendment (the ''*Amendment*'') to the existing US$437,024,000, five-year Millennium Challenge Compact between the United States of America, acting through MCC, and the Republic of Niger (the ''*Compact*'').

Background

The Compact was signed July 29, 2016 and entered into force on January 26, 2018. The Compact aims to increase rural incomes through improvements in agricultural productivity and sales resulting from modernized irrigated agriculture with sufficient trade and market access; and to increase incomes for small-scale agriculture-dependent and livestock-dependent families in eligible municipalities in rural Niger by improving crop and livestock productivity, sustaining natural resources critical to long-term productivity, and increasing market sales of targeted commodities through two projects: The Irrigation and Market Access Project and Climate-Resilient Communities Project.

Scope of the Amendment

MCC proposes to extend the term of the Compact for an additional 12 months to January 26, 2024 and to provide additional funding up to $5,600,000. The term extension is necessary to mitigate implementation delays due to the COVID–19 pandemic and to complete projects as originally contemplated. The proposed additional funding will be used to cover additional program administration and related oversight costs associated with extending the Compact's term.

Justification for the Amendment

Niger registered its first COVID–19 case on March 19, 2020. Within weeks, the Government of Niger imposed a tight lock-down closing international airports and land borders, restricting movements between cities, shuttering hotels, limiting gatherings to ten people or less, and enforcing a nightly curfew. Over the course of the next two months, the U.S. Embassy evacuated over 400 Americans and placed MCC staff who remained in country on mandatory telework status. Restrictions on movement and gatherings were eased in May 2020. International air travel reassumed with strict sanitary protocols that included 14-day quarantines upon arrival in Niger. International airlines, however, did not resume flights into Niger until August and September 2020.

Since the outbreak began in March 2020, COVID–19 has significantly delayed Compact implementation. Several Millennium Challenge Account-Niger (''*MCA-Niger*'') staff and contractors contracted COVID–19. The transition to telework has proved challenging for MCA-Niger due to connectivity issues. The limitations on the size of public gathering size increased the number of required meetings. Some potential contractors, wary of exposing their staff to COVID–19, delayed signing new contracts because they were reluctant to commit to a deliverable timeline amidst continued uncertainty about the trajectory of COVID–19 cases in Niger. Also, MCC staff and contractors could not travel to Niger, delaying bid preparation, project work, and project oversight.

Extending the Compact term will enable MCC and the Government of Niger to complete and hand over all ongoing projects to the beneficiary institutions at the required quality, without compromising health, safety, and environmental standards, and will reduce sustainability risks through finalization of farmer training and land tenure support activities and testing of the new innovative road maintenance arrangement. The Compact extension will also maximize long-term results and benefits for the citizens of Niger, and MCC's return on investment, and benefit the Compact program as a whole. The additional funding will be used to cover additional program administration and related oversight costs associated with extending the Compact's term.

First Amendment to Millennium Challenge Compact Between the United States of America, Acting Through the Millennium Challenge Corporation and the Republic of Niger, Acting Through the Ministry in Charge of Foreign Affairs and Cooperation

First Amendment to Millennium Challenge Compact

This FIRST AMENDMENT TO MILLENNIUM CHALLENGE COMPACT (this ''*Amendment*''), is made by and between the United States of America, acting through the Millennium Challenge Corporation, a United States government corporation (''*MCC*''), and the Republic of Niger, acting through the Ministry in Charge of Foreign Affairs and Cooperation (the ''*Government*'') (each referred to herein individually as a ''*Party*'' and collectively, as the ''*Parties*''). All capitalized terms used in this Amendment that are not otherwise defined herein have the meanings given to such terms in the Compact (as defined below).

Recitals

Whereas, the Parties signed that certain Millennium Challenge Compact by and between the United States of America, acting through MCC, and the Republic of Niger, acting through the Ministry in Charge of Foreign Affairs and Cooperation, on July 29, 2016 (as modified on August 23, 2019 and October 9, 2020, the ''*Compact*'');

Whereas, Section 7.4 of the Compact provides for a Compact Term of five (5) years from its entry into force on January 26, 2018;

Whereas, implementation of the Compact Program has been adversely affected and delayed by the coronavirus pandemic;

Whereas, the Parties now desire to extend the Compact Term by an additional twelve (12) months until January 26, 2024 (the ''*Extension*''), and to increase assistance under the Compact for related administrative and oversight costs, to allow the Government more time to implement and complete the Projects in order to fully achieve the Compact Goal and Project Objectives;

Whereas, the Parties further desire to modify the Project Objective for the Irrigation and Market Access Project; and

Whereas, pursuant to Section 6.2(a) of the Compact, the Parties desire to amend the Compact as more fully described herein to memorialize the Extension and the modified Project Objective.

Now, therefore, the Parties hereby agree as follows:

Amendments

1. Amendment to Section 1.3

Section 1.3 (Project Objectives) of the Compact is amended and restated to read as follows:

''Section 1.3 *Project Objectives.* The objective of each of the Projects (each a ''Project Objective'' and collectively, the ''Project Objectives'') is to:

(a) increase rural incomes through improvements in agricultural productivity and increases in sales resulting from modernized irrigated agriculture with sufficient trade and market access; and

(b) increase incomes for small-scale agricultural- and livestock-dependent families in Eligible Communes and Livestock Corridors in rural Niger by improving crop and livestock productivity, sustaining natural resources critical to production, supporting growth of agricultural enterprises and increasing market sales of targeted commodities.''

2. Amendment to Section 2.1

Section 2.1 (Program Funding) of the Compact is amended and restated to read as follows:

''Section 2.1 *Program Funding.* Upon entry into force of this Compact in accordance with Section 7.3, MCC will grant to the Government, under the terms of this Compact, an amount not to exceed Four Hundred Thirty-Four Million, Six Hundred Fifty-Two Thousand, Six Hundred Ninety-Six United States Dollars (US$434,652,696) (''*Program Funding*'') for use by the Government to implement the Program. The allocation of Program Funding is generally described in Annex II.''

3. Amendment to Section 7.4

Section 7.4 (Compact Term) of the Compact is amended and restated to read as follows:

''Section 7.4 *Compact Term.* This Compact will remain in force for six (6) years after its entry into force, until January 26, 2024, unless terminated earlier under Section 5.1 (the ''*Compact Term*'').''

4. Amendments to Annex II (Multi-Year Financial Plan Summary)

(a) Exhibit A to Annex II (Multi-Year Financial Plan Summary) to the Compact is deleted in its entirety and replaced by revised Exhibit A set forth in Annex I to this Amendment, which revised Exhibit A includes the Compact Development Funding amount granted by implementation of Section 2.2(d) of the Compact.

General Provisions

1. Further Assurances

Each Party hereby covenants and agrees, without necessity of any further consideration, to execute and deliver any and all such further documents and take any and all such other action as may be reasonably necessary or appropriate to carry out the intent and purpose of this Amendment.

2. Effect of This Amendment

From and after the date this Amendment enters into force, the Compact and this Amendment will be read together and construed as one document, and each reference in the Compact to the ''Compact,'' ''hereunder,'' ''hereof'' or words of like import referring to the Compact, and each reference to the ''Compact,'' ''thereunder,'' ''thereof'' or words of like import in any Supplemental Agreement or in any other document or instrument delivered pursuant to the Compact or any Supplemental Agreement, will mean and be construed as a reference to the Compact, as amended by this Amendment.

3. Limitations

Except as expressly amended by this Amendment, all of the provisions of the Compact remain unchanged and in full force and effect.

4. Governing Law

The Parties acknowledge and agree that this Amendment is an international agreement entered into for the purpose of amending the Compact and as such will be interpreted in a manner consistent with the Compact and is governed by international law.

Annex I

REVISED EXHIBIT A TO ANNEX II TO THE COMPACT MULTI-YEAR FINANCIAL PLAN SUMMARY

Component	Current approved NYFP	Proposed additional MCC grant funds	Revised MYFP
1. Irrigation and Market Access Project			
1.1 Irrigation Perimeter Development	90,507,931		90,507,931
1.2 Management Services and Market Facilitation	15,039,275		15,039,275
1.3 Roads for Market Access	133,813,527		133,813,527
1.4 Policy Reform	17,184,394		17,184,394
Sub-total	256,545,127		256,545,127
2. Climate-Resilient Communities Project			
2.1 Regional Sahel Pastoralism Support (PRAPS)	52,155,587		52,155,587
2.2 Climate-Resilient Agriculture (CRA)	51,865,027		51,865,027
Sub-total	104,020,613		104,020,613
3. Monitoring and Evaluation			
3.1 Monitoring and Evaluation	12,000,000		12,000,000
Sub-total	12,000,000		12,000,000

REVISED EXHIBIT A TO ANNEX II TO THE COMPACT MULTI-YEAR FINANCIAL PLAN SUMMARY—Continued

Component	Current approved NYFP	Proposed additional MCC grant funds	Revised MYFP
4. Program Management and Administration			
4.1 MCA-Niger Administration, Program Management Support, Fiscal Agent, Procurement Agent and Financial Audits	56,486,956	5,600,000	62,086,956
Sub-total	56,486,956	5,600,000	62,086,956
Total Program Funding	429,052,696	5,600,000	434,652,696
Total Compact Development Funding	7,971,304		7,971,304
Total MCC Funds	437,024,000	5,600,000	442,624,000

[FR Doc. 2022–01136 Filed 1–20–22; 8:45 am]
BILLING CODE 9211–03–P

NATIONAL AERONAUTICS AND SPACE ADMINISTRATION

[Notice (22–005)]

Planetary Science Advisory Committee; Meeting

AGENCY: National Aeronautics and Space Administration.

ACTION: Notice of meeting.

SUMMARY: In accordance with the Federal Advisory Committee Act, as amended, the National Aeronautics and Space Administration (NASA) announces a meeting of the Planetary Science Advisory Committee. The meeting will be held for the purpose of soliciting, from the scientific community and other persons, scientific and technical information relevant to program planning.

DATES: Tuesday, February 15, 2022, 12:00 p.m. to 6:00 p.m., Eastern Time.

ADDRESSES: Meeting will be virtual only. See dial-in information below under **SUPPLEMENTARY INFORMATION.**

FOR FURTHER INFORMATION CONTACT: Ms. Karshelia Kinard, Science Mission Directorate, NASA Headquarters, Washington, DC 20546, (202) 358–2355 or *karshelia.kinard@nasa.gov.*

SUPPLEMENTARY INFORMATION: As noted above, this meeting will be available to the public by WebEx only. The meeting event address for attendees is: *https://nasaevents.webex.com/nasaevents/onstage/g.php?MTID=eaf02abdfed7a5acf5468be483fd15e67.* The meeting number is: 2760 600 4415 and the password is: QTeyX3sXA24.

Accessibility: Captioning will be provided for this meeting. NASA is committed to providing equal access to this meeting for all participants. If you need alternative formats or other reasonable accommodations, please contact Ms. KarShelia Kinard, Science Mission Directorate, NASA Headquarters, Washington, DC 20546, (202) 358–2355 or *karshelia.kinard@nasa.gov.*

The agenda for the meeting includes the following topics:

—Planetary Science Division Update
—Planetary Science Division Research and Analysis Program Update

It is imperative that the meeting be held on these dates to accommodate the scheduling priorities of the key participants.

Patricia Rausch,

Advisory Committee Management Officer, National Aeronautics and Space Administration.

[FR Doc. 2022–01102 Filed 1–20–22; 8:45 am]
BILLING CODE 7510–13–P

NATIONAL SCIENCE FOUNDATION

Proposal Review Panel for Materials Research; Notice of Meeting

In accordance with the Federal Advisory Committee Act (Pub. L. 92–463, as amended), the National Science Foundation (NSF) announces the following meeting:

NAME AND COMMITTEE CODE: MRSEC—Ohio State 2nd Year Virtual Site Visit (1203).

DATE AND TIME: May 5, 2022; 9:30 a.m.—4:00 p.m.

PLACE: NSF 2415 Eisenhower Avenue, Alexandria, VA 22314 | Virtual.

TYPE OF MEETING: Part-Open.

CONTACT PERSON: Dr. Cosima Boswell-Koller, Program Director, Division of Materials Research, National Science Foundation, 2415 Eisenhower Avenue, Room W 9216, Alexandria, VA 22314; 703–292–8800.

PURPOSE OF MEETING: Virtual site visit to provide an evaluation of the progress of the projects at the host site for the Division of Materials Research at the National Science Foundation.

AGENDA:

MAY 5, 2022

9:30 a.m.–10:00 a.m	Brief Charge to Panel	CLOSED.
10:00 a.m.–10:10 a.m	Introduction	OPEN.
10:10 a.m.–10:55 a.m	Director's Overview	OPEN.
10:55 a.m.–11:10 a.m	Discussion/Questions	OPEN.
11:10 a.m.–11:30 a.m	IRG–1 Presentation	OPEN.
11:30 a.m.–11:35 a.m	Discussion/Questions	OPEN.
11:35 a.m.–11:45 a.m	Break	OPEN.
11:45 a.m.–12:05 p.m	IRG–2 Presentation	OPEN.
12:05 p.m.–12:10 p.m	Discussion/Question	OPEN.
12:10 p.m.–12:35 p.m	Education and Outreach, Diversity Plan	OPEN.
12:35 p.m.–12:45 p.m	Discussion/Questions	OPEN.
12:45 p.m.–01:30 p.m	Working Lunch	CLOSED.

MAY 5, 2022—Continued

01:30 p.m.–02:30 p.m	Poster Session	OPEN.
02:30 p.m.–02:45 p.m	Site Visit Discussion	OPEN.
02:45 p.m.–03:30 p.m	Executive Session	CLOSED.
03:30 p.m.–04:00 p.m	Debriefing	OPEN.
04:00 p.m	Adjourn..	

REASON FOR CLOSING: The work being reviewed during closed portions of the virtual site visit include information of a proprietary or confidential nature, including technical information; financial data, such as salaries and personal information concerning individuals associated with the project. These matters are exempt under 5 U.S.C. 552b(c), (4) and (6) of the Government in the Sunshine Act.

Dated: January 14, 2022.

Crystal Robinson,

Committee Management Officer.

[FR Doc. 2022–01095 Filed 1–20–22; 8:45 am]

BILLING CODE 7555–01–P

NATIONAL SCIENCE FOUNDATION

Proposal Review Panel for Materials Research; Notice of Meeting

In accordance with the Federal Advisory Committee Act (Pub. L. 92–463, as amended), the National Science Foundation (NSF) announces the following meeting:

NAME AND COMMITTEE CODE: MRSEC—Minnesota 2nd Year Virtual Site Visit (1203).

DATE AND TIME: May 19, 2022, 9:30 a.m.–4:00 p.m.

PLACE: NSF, 2415 Eisenhower Avenue, Alexandria, VA 22314 | Virtual.

TYPE OF MEETING: Part-Open.

CONTACT PERSON: Dr. Cosima Boswell-Koller, Program Director, Division of Materials Research, National Science Foundation, 2415 Eisenhower Avenue, Room W 9216, Alexandria, VA 22314; 703/292–8800.

PURPOSE OF MEETING: Virtual site visit to provide an evaluation of the progress of the projects at the host site for the Division of Materials Research at the National Science Foundation.

AGENDA:

MAY 19, 2022

9:30 a.m.–10:00 a.m	Brief Charge to Panel	CLOSED.
10:00 a.m.–10:10 a.m	Introduction	OPEN.
10:10 a.m.–10:55 a.m	Director's Overview	OPEN.
10:55 a.m.–11:10 a.m	Discussion/Questions	OPEN.
11:10 a.m.–11:30 a.m	IRG–1 Presentation	OPEN.
11:30 a.m.–11:35 a.m	Discussion/Questions	OPEN.
11:35 a.m.–11:45 a.m	Break	OPEN.
11:45 a.m.–12:05 p.m	IRG–2 Presentation	OPEN.
12:05 p.m.–12:10 p.m	Discussion/Questions	OPEN.
12:10 p.m.–12:35 p.m	Education and Outreach, Diversity Plan	OPEN.
12:35 p.m.–12:45 p.m	Discussion/Questions	OPEN.
12:45 p.m.–01:30 p.m	Working Lunch	CLOSED.
01:30 p.m.–02:30 p.m	Poster Session	OPEN.
02:30 p.m.–02:45 p.m	Site Visit Discussion	OPEN.
02:45 p.m.–03:30 p.m	Executive Session	CLOSED.
03:30 p.m.–04:00 p.m	Debriefing	OPEN.
04:00 p.m	Adjourn.	

REASON FOR CLOSING: The work being reviewed during closed portions of the virtual site visit include information of a proprietary or confidential nature, including technical information; financial data, such as salaries and personal information concerning individuals associated with the project. These matters are exempt under 5 U.S.C. 552b(c), (4) and (6) of the Government in the Sunshine Act.

Dated: January 14, 2022.

Crystal Robinson,

Committee Management Officer.

[FR Doc. 2022–01097 Filed 1–20–22; 8:45 am]

BILLING CODE 7555–01–P

NATIONAL SCIENCE FOUNDATION

Proposal Review Panel for Materials Research; Notice of Meeting

In accordance with the Federal Advisory Committee Act (Pub. L. 92–463, as amended), the National Science Foundation (NSF) announces the following meeting:

NAME AND COMMITTEE CODE: MRSEC—Chicago 2nd Year Virtual Site Visit (1203).

DATE AND TIME: May 16, 2022, 9:30 a.m.–4:00 p.m.

PLACE: NSF, 2415 Eisenhower Avenue, Alexandria, VA 22314 | Virtual.

TYPE OF MEETING: Part-Open.

CONTACT PERSON: Dr. Miriam Deutsch, Program Director, Division of Materials Research, National Science Foundation, 2415 Eisenhower Avenue, Room W 9216, Alexandria, VA 22314; Telephone: (703) 292–5360.

PURPOSE OF MEETING: Virtual site visit to provide an evaluation of the progress of the projects at the host site for the Division of Materials Research at the National Science Foundation.

AGENDA:

MAY 16, 2022

9:30 a.m.–10:00 a.m	Brief Charge to Panel	CLOSED.
10:00 a.m.–10:10 a.m	Introduction	OPEN.
10:10 a.m.–10:55 a.m	Director's Overview	OPEN.

MAY 16, 2022—Continued

10:55 a.m.–11:10 a.m	Discussion/Questions	OPEN.
11:10 a.m.–11:30 a.m	IRG–1 Presentation	OPEN.
11:30 a.m.–11:35 a.m	Discussion/Questions	OPEN.
11:35 a.m.–11:45 a.m	Break	OPEN.
11:45 a.m.–12:05 p.m	IRG–2 Presentation	OPEN.
12:05 p.m.–12:10 p.m	Discussion/Questions	OPEN.
12:10 p.m.–12:35 p.m	Education and Outreach, Diversity Plan	OPEN.
12:35 p.m.–12:45 p.m	Discussion/Questions	OPEN.
12:45 p.m.–01:30 p.m	Working Lunch	CLOSED.
01:30 p.m.–02:30 p.m	Poster Session	OPEN.
02:30 p.m.–02:45 p.m	Site Visit Discussion	OPEN.
02:45 p.m.–03:30 p.m	Executive Session	CLOSED.
03:30 p.m.–04:00 p.m	Debriefing	OPEN.
04:00 p.m	Adjourn.	

REASON FOR CLOSING: The work being reviewed during closed portions of the virtual site visit include information of a proprietary or confidential nature, including technical information; financial data, such as salaries and personal information concerning individuals associated with the project. These matters are exempt under 5 U.S.C. 552b(c), (4) and (6) of the Government in the Sunshine Act.

Dated: January 14, 2022.

Crystal Robinson,

Committee Management Officer.

[FR Doc. 2022–01096 Filed 1–20–22; 8:45 am]

BILLING CODE 7555–01–P

NATIONAL SCIENCE FOUNDATION

Identification of Federal Financial Assistance Infrastructure Programs Subject to the Build America, Buy America Provisions of the Infrastructure Investment and Jobs Act

AGENCY: National Science Foundation.

ACTION: Notice.

SUMMARY: The Division of Acquisition and Cooperative Support within the National Science Foundation (NSF) is publishing this notice to advise the public of the report that reflects the National Science Foundation's analysis of financial assistance-funded infrastructure programs and associated Build America, Buy America requirements. NSF has focused on infrastructure related to science and education programs.

FOR FURTHER INFORMATION CONTACT: Patrick Breen, Division Director, Division of Acquisition and Cooperative Support, National Science Foundation. Phone: 703–292–7719; email: *pkbreen@nsf.gov.*

SUPPLEMENTARY INFORMATION: After OMB releases implementation guidance subject to section 70915 of the Infrastructure Investment and Jobs Act, the National Science Foundation will work closely with OMB to ensure that appropriate agency programs that are subject to Build America, Buy America requirements are administered with those requirements in place and will adhere to forthcoming OMB guidance. This analysis is subject to change upon further evaluation.

In accordance with Section 70913 of the Infrastructure Investment and Jobs Act (IIJA), which includes the ''Build America, Buy America Act'' (the Act), the National Science Foundation (NSF) is submitting the following information to the Office of Management and Budget (OMB) and Congress. Additionally, NSF will publish this report in the **Federal Register**.

Background

On November 15, 2021, President Biden signed into law the Infrastructure Investment and Jobs Act, which includes the ''Build America, Buy America Act''. This Act requires agencies submit to the OMB and Congress a report within 60 days of its enactment, January 14, 2022, listing all Federal financial assistance programs for infrastructure administered by the agency. As required by the Act, this report will also be published in the **Federal Register**.

In accordance with the Act, NSF's 60-day report includes the following information:

1. Identification of all domestic content procurement preferences applicable to Federal financial assistance;
2. An assessment of the application of the domestic content procurement preference requirements;
3. Details on any applicable domestic content procurement preference requirement, including the purpose, scope, applicability, and any exceptions and waivers issued under the requirement;
4. A description of the type of infrastructure projects that receive funding under the program; and
5. Identification and evaluation of all infrastructure programs to determine if they are inconsistent with section 70914 of the Act.

1. Domestic Content Procurement Preference Applicable to Federal Financial Assistance Issued by NSF

Grants

NSF has implemented one article in its Grant General Conditions (GC–1).

Article 44, Domestic Preference for Procurements, notifies awardees of the applicability of 2 CFR 200.322, entitled Domestic Preferences for Procurements. The Article, and the reference to 2 CFR 200.322, ensure that recipients provide preference for the purchase, acquisition, or use of goods, products, or materials produced in the United States. These items include, but are not limited to, iron, aluminum, steel, cement, and other manufactured products.

Cooperative Agreements

NSF has implemented two articles in its Cooperative Agreement Financial and Administrative Terms and Conditions (CA–FATC).

Article 45, Domestic Preference for Procurements, notifies awardees of the applicability of 2 CFR 200.322, entitled Domestic Preferences for Procurements. The Article, and the reference to 2 CFR 200.322, ensure that recipients provide preference for the purchase, acquisition, or use of goods, products, or materials produced in the United States. These items include, but are not limited to, iron, aluminum, steel, cement, and other manufactured products.

Article 46, Made in America, applies to major facility construction stage awards and mid-scale research infrastructure implementation awards greater than $20 million and notifies these awardees that they must retain appropriate documentation to substantiate any circumstance where the awardee has deemed a U.S. preference is not feasible in acquiring goods,

products, or materials due to non-availability or unreasonable cost.

2. Assessment of the Application of the Domestic Content Procurement Preference Requirements

Domestic Procurement Preferences Not Applicable to NSF

NSF reviewed the authorities listed in section 70913(b)(2)(A)–(G) of the Act. The listed authorities are not appliable to financial assistance awards issued by NSF. There are no NSF-specific statutes which require a domestic preference in NSF financial assistance programs.

Domestic Procurement Preferences Applicable to NSF

In reviewing other authorities, and as stated above, 2 CFR 200.322, Domestic Preference for Procurements, is included in the financial assistance awards issued by NSF subject to GC–1, or the CA–FATC.

3. Details on Any Applicable Domestic Content Procurement Preference Requirement, Including the Purpose, Scope, Applicability, and Any Exceptions and Waivers Issued Under the Requirement

As stated above, as of November 12, 2020, 2 CFR 200.322, Domestic Preferences for Procurements, from the Uniform Administrative Requirements, Cost Principles, and Audit Requirements for Federal Awards applies to NSF financial assistance awards. NSF further reemphasized this new requirement by adding new terms and conditions to grants and cooperative agreements issued by NSF on or after October 4, 2021. Article 44 of the GC–1 and Article 45 of the CA–FATC are included in awards to ensure recipients are aware of the preference for the purchase, acquisition, or use of goods, products, or materials produced in the United States. Further, the reference to 2 CFR 200.322 ensures the use of common definitions of ''produced in the United States'' and ''manufactured products''.

The text of Article 44 of the GC–1 and Article 45 of the CA–FATC, Domestic Preferences for Procurements is:

> The awardee is notified of the applicability of 2 CFR 200.322, entitled Domestic Preferences for Procurements.

Article 46 of the CA–FATC, which applies to major facility construction stage awards and mid-Scale research infrastructure implementation awards greater than $20 million, adds an additional requirement. See definitions in Section 4 below. This article requires the recipient to document and substantiate any circumstance where the recipient has deemed a U.S. preference not feasible in acquiring goods, products, or materials which could then be reviewed by NSF upon request.

The text of Article 46, Made in America is:

> In implementation of 2 CFR 200.322, major facility construction stage awards and mid-Scale research infrastructure implementation awards greater than $20 million must retain appropriate documentation to substantiate any circumstance where the awardee has deemed a U.S. preference not feasible in acquiring goods, products, or materials. The documentation must identify the basis for the determination and be based on:
>
> a. Domestic non-availability—articles, materials, or supplies are not mined, produced, or manufactured in sufficient and reasonably available commercial quantities and of a satisfactory quality to meet technical or operational requirements;
>
> b. Unreasonable cost—the price of the domestic end product (including transport to the construction site) is higher than the price of a foreign end product by 30 percent if offered by small business or 20 percent if offered by other than a small business;
>
> c. The purchase is related to commercially-available information technology; and/or
>
> d. The purchases are at or below the micro-purchase threshold (currently $10,000 for most acquisitions) or related to procurements for use outside of the United States.

The requirements of this article must be included in all subawards, contracts and purchase orders for work or products under this award.

NSF is not aware of any exercise of exceptions or waivers requested as to the domestic preference requirements established by 2 CFR 200.322 as implemented through GC–1 or the CA–FATC.

4. A Description of the Type of Infrastructure Projects That Receive Funding Under the Program

Types of Infrastructure Projects

As an integral part of its responsibility for strengthening the science and engineering capacity of the country, NSF provides support for the design, construction, operation, and upgrade of research infrastructure. NSF defines research infrastructure as any combination of facilities, equipment, instrumentation, computational hardware and software, and the necessary supporting human capital. Research infrastructure includes major research instrumentation, mid-scale projects, and major facilities.

NSF typically supports research infrastructure construction from two appropriations accounts: The Major Research Equipment and Facility Construction (MREFC) account and the Research and Related Activities (R&RA) account, but additional support may come from the Education and Human Resources (EHR) Account.

The MREFC account was created in 1995 to fund the acquisition, construction, commissioning, and upgrading of major science and engineering infrastructure projects that could not be otherwise supported by NSF directorate-level budgets without a severe negative impact on funded science. MREFC projects generally range in cost from one hundred million to several hundred million dollars expended over a multi-year period.

The R&RA account is used to support other activities involving a major facility that the MREFC account cannot support, including planning and development, design, operations and maintenance, and associated scientific research. Construction and acquisition projects at a smaller scale, usually of a scale ranging from millions to tens of millions of dollars, are also normally supported from the R&RA account unless a specific program is included in the MREFC account.

Per Section 110 of the 2017 American Innovation and Competitiveness Act (AICA), as amended, a major multi-use research facility project (major facility) is defined as follows:

> ''(2) MAJOR MULTI-USER RESEARCH FACILITY PROJECT. The term 'major multi-user research facility project' means a science and engineering facility project that exceeds $100,000,000 in total construction, acquisition, or upgrade costs to the Foundation.'' (42 U.S.C. 1862s–2(g)(2)).

NSF interprets the above to mean the Total Project Costs (TPC) as defined by the investment in construction or acquisition, not the operations or associated science program costs. If the TPC for research infrastructure is above the major facility project threshold as defined by statute, it is considered a major facility throughout its full life cycle.

Per Section 109 of AICA, a mid-scale project means research instrumentation, equipment, and upgrades to major research facilities or other research infrastructure investments that exceeds the maximum funded by the Major Research Instrumentation (MRI) program (currently $4M) and are below that of a major facility. Similar to major facilities, mid-scale projects may also involve development and design, construction or acquisition, operations, and eventual divestment.

For the purposes of implementing the Act and reporting the figures below, NSF defines ''infrastructure'' as any mid-scale project over $20M and all major facilities, including upgrades to major facilities. At this time design, operations and routine maintenance

costs associated with this infrastructure are not included.

PROGRAMS, NUMBER OF RECIPIENTS, AND DOLLARS OBLIGATED FOR FISCAL YEARS 2019 THROUGH 2021

Assistance listing No.	Fiscal year 2019		Fiscal year 2020		Fiscal year 2021	
	Number of recipients	Funding	Number of recipients	Funding	Number of recipients	Funding
47.041—Engineering	1	$7,810,746	0	$0	2	$31,106,800
47.049—Mathematical and Physical Sciences	3	83,541,638	3	79,349,626	5	89,530,899
47.050—Geosciences	2	117,977,019	1	25,000,000	2	25,987,704
47.070—Computer and Information Science and Engineering	0	0	0	0	0	0
47.074—Biological Sciences	0	0	0	0	1	20,048,344
47.078—Polar Programs	0	0	0	0	0	0
47.083—Integrative Activities	0	0	0	0	0	0

5. Identify and Evaluate All Infrastructure Programs To Determine if They Are Inconsistent With Section 70914 of the Act

Currently NSF is fully compliant with all domestic preference requirements effective on the date of this report that are applicable to the Federal financial assistance awards issued by NSF.

Section 70914(a) of the Act requires the following:

''Not later than 180 days after the date of enactment of this Act, the head of each Federal agency shall ensure that none of the funds made available for a Federal financial assistance program for infrastructure, including each deficient program, may be obligated for a project unless all of the iron, steel, manufactured products, and construction materials used in the project are produced in the United States.''

NSF will update its terms and conditions for affected programs to comply with this section of the Act on or before May 14, 2022.

Dated: January 14, 2022.

Raymond McCollum,

Policy Branch Chief, National Science Foundation.

[FR Doc. 2022–01120 Filed 1–20–22; 8:45 am]

BILLING CODE 7555–01–P

NATIONAL SCIENCE FOUNDATION

Proposal Review Panel for Materials Research; Notice of Meeting

In accordance with the Federal Advisory Committee Act (Pub. L. 92–463, as amended), the National Science Foundation (NSF) announces the following meeting:

NAME AND COMMITTEE CODE: MRSEC—Brandeis 2nd Year Virtual Site Visit (1203).

DATE AND TIME: April 26, 2022; 9:30 a.m.–4:00 p.m.

PLACE: NSF, 2415 Eisenhower Avenue, Alexandria, VA 22314 | Virtual.

TYPE OF MEETING: Part-Open.

CONTACT PERSON: Dr. Miriam Deutsch, Program Director, Division of Materials Research, National Science Foundation, 2415 Eisenhower Avenue, Room W 9216, Alexandria, VA 22314; Telephone: (703) 292–5360.

PURPOSE OF MEETING: Virtual site visit to provide an evaluation of the progress of the projects at the host site for the Division of Materials Research at the National Science Foundation.

AGENDA:

APRIL 26, 2022

9:30 a.m.–10:00 a.m	Brief Charge to Panel	CLOSED.
10:00 a.m.–10:10 a.m	Introduction	OPEN.
10:10 a.m.–10:55 a.m	Director's Overview	OPEN.
10:55 a.m.–11:10 a.m	Discussion/Questions	OPEN.
11:10 a.m.–11:30 a.m	IRG–1 Presentation	OPEN.
11:30 a.m.–11:35 a.m	Discussion/Questions	OPEN.
11:35 a.m.–11:45 a.m	Break	OPEN.
11:45 a.m.–12:05 p.m	IRG–2 Presentation	OPEN.
12:05 p.m.–12:10 p.m	Discussion/Questions	OPEN.
12:10 p.m.–12:35 p.m	Education and Outreach, Diversity Plan	OPEN.
12:35 p.m.–12:45 p.m	Discussion/Questions	OPEN.
12:45 p.m.–01:30 p.m	Working Lunch	CLOSED.
01:30 p.m.–02:30 p.m	Poster Session	OPEN.
02:30 p.m.–02:45 p.m	Site Visit Discussion	OPEN.
02:45 p.m.–03:30 p.m	Executive Session	CLOSED.
03:30 p.m.–04:00 p.m	Debriefing	OPEN.
04:00 p.m	Adjourn.	

REASON FOR CLOSING: The work being reviewed during closed portions of the virtual site visit include information of a proprietary or confidential nature, including technical information; financial data, such as salaries and personal information concerning individuals associated with the project. These matters are exempt under 5 U.S.C. 552b(c), (4) and (6) of the Government in the Sunshine Act.

Dated: January 14, 2022.

Crystal Robinson,

Committee Management Officer.

[FR Doc. 2022–01092 Filed 1–20–22; 8:45 am]

BILLING CODE 7555–01–P

NATIONAL SCIENCE FOUNDATION

Proposal Review Panel for Materials Research; Notice of Meeting

In accordance with the Federal Advisory Committee Act (Pub. L. 92–463, as amended), the National Science Foundation (NSF) announces the following meeting:

NAME AND COMMITTEE CODE: MRSEC—Princeton 2nd Year Virtual Site Visit (1203).

DATE AND TIME: April 21, 2022; 9:30 a.m.–4:00 p.m.

PLACE: NSF, 2415 Eisenhower Avenue, Alexandria, VA 22314 | Virtual.

TYPE OF MEETING: Part-Open.

CONTACT PERSON: Dr. Cosima Boswell-Koller, Program Director, Division of Materials Research, National Science Foundation, 2415 Eisenhower Avenue, Room W 9216, Alexandria, VA 22314; 703–292–8800.

PURPOSE OF MEETING: Site visit to provide an evaluation of the progress of the projects at the host site for the Division of Materials Research at the National Science Foundation.

AGENDA:

APRIL 21, 2022

9:30 a.m.–10:00 a.m	Brief Charge to Panel	CLOSED.
10:00 a.m.–10:10 a.m	Introduction	OPEN.
10:10 a.m.–10:55 a.m	Director's Overview	OPEN.
10:55 a.m.–11:10 a.m	Discussion/Questions	OPEN.
11:10 a.m.–11:30 a.m	IRG–1 Presentation	OPEN.
11:30 a.m.–11:35 a.m	Discussion/Questions	OPEN.
11:35 a.m.–11:45 a.m	Break	OPEN.
11:45 a.m.–12:05 p.m	IRG–2 Presentation	OPEN.
12:05 p.m.–12:10 p.m	Discussion/Questions	OPEN.
12:10 p.m.–12:35 p.m	Education and Outreach, Diversity Plan	OPEN.
12:35 p.m.–12:45 p.m	Discussion/Questions	OPEN.
12:45 p.m.–01:30 p.m	Working Lunch	CLOSED.
01:30 p.m.–02:30 p.m	Poster Session	OPEN.
02:30 p.m.–02:45 p.m	Site Visit Discussion	OPEN.
02:45 p.m.–03:30 p.m	Executive Session	CLOSED.
03:30 p.m.–04:00 p.m	Debriefing	OPEN.
04:00 p.m	Adjourn.	

REASON FOR CLOSING: The work being reviewed during closed portions of the virtual site visit include information of a proprietary or confidential nature, including technical information; financial data, such as salaries and personal information concerning individuals associated with the project. These matters are exempt under 5 U.S.C. 552b(c), (4) and (6) of the Government in the Sunshine Act.

Dated: January 14, 2022.

Crystal Robinson,

Committee Management Officer.

[FR Doc. 2022–01091 Filed 1–20–22; 8:45 am]

BILLING CODE 7555–01–P

NATIONAL SCIENCE FOUNDATION

Proposal Review Panel for Materials Research; Notice of Meeting

In accordance with the Federal Advisory Committee Act (Pub. L. 92–463, as amended), the National Science Foundation (NSF) announces the following meeting:

NAME AND COMMITTEE CODE: MRSEC—Minnesota 2nd Year Virtual Site Visit (1203).

DATE AND TIME: April 15, 2022, 9:30 a.m.–4:00 p.m.

PLACE: NSF, 2415 Eisenhower Avenue, Alexandria, VA 22314 | Virtual.

TYPE OF MEETING: Part-Open.

CONTACT PERSON: Dr. Miriam Deutsch, Program Director, Division of Materials Research, National Science Foundation, 2415 Eisenhower Avenue, Room W 9216, Alexandria, VA 22314; Telephone: (703) 292–5360.

PURPOSE OF MEETING: Virtual site visit to provide an evaluation of the progress of the projects at the host site for the Division of Materials Research at the National Science Foundation.

AGENDA:

APRIL 15, 2022

9:30 a.m.–10:00 a.m	Brief Charge to Panel	CLOSED.
10:00 a.m.–10:10 a.m	Introduction	OPEN.
10:10 a.m.–10:55 a.m	Director's Overview	OPEN.
10:55 a.m.–11:10 a.m	Discussion/Questions	OPEN.
11:10 a.m.–11:30 a.m	IRG–1 Presentation	OPEN.
11:30 a.m.–11:35 a.m	Discussion/Questions	OPEN.
11:35 a.m.–11:45 a.m	Break	OPEN.
11:45 a.m.–12:05 p.m	IRG–2 Presentation	OPEN.
12:05 p.m.–12:10 p.m	Discussion/Questions	OPEN.
12:10 p.m.–12:35 p.m	Education and Outreach, Diversity Plan	OPEN.
12:35 p.m.–12:45 p.m	Discussion/Questions	OPEN.
12:45 p.m.–01:30 p.m	Working Lunch	CLOSED.
01:30 p.m.–02:30 p.m	Poster Session	OPEN.
02:30 p.m.–02:45 p.m	Site Visit Discussion	OPEN.
02:45 p.m.–03:30 p.m	Executive Session	CLOSED.
03:30 p.m.–04:00 p.m	Debriefing	OPEN.
04:00 p.m	Adjourn.	

REASON FOR CLOSING: The work being reviewed during closed portions of the virtual site visit include information of a proprietary or confidential nature, including technical information; financial data, such as salaries and personal information concerning individuals associated with the project. These matters are exempt under 5

U.S.C. 552b(c), (4) and (6) of the Government in the Sunshine Act.

Dated: January 14, 2022.

Crystal Robinson,

Committee Management Officer.

[FR Doc. 2022–01090 Filed 1–20–22; 8:45 am]

BILLING CODE 7555–01–P

NATIONAL SCIENCE FOUNDATION

Proposal Review Panel for Materials Research; Notice of Meeting

In accordance with the Federal Advisory Committee Act (Pub. L. 92–463, as amended), the National Science Foundation (NSF) announces the following meeting:

NAME AND COMMITTEE CODE: MRSEC—UCSD 2nd Year Virtual Site Visit (1203).

DATE AND TIME: April 27, 2022; 9:30 a.m.–4:00 p.m.

PLACE: NSF, 2415 Eisenhower Avenue, Alexandria, VA 22314 | Virtual.

TYPE OF MEETING: Part-Open.

CONTACT PERSON: Dr. Miriam Deutsch, Program Director, Division of Materials Research, National Science Foundation, 2415 Eisenhower Avenue, Room W 9216, Alexandria, VA 22314; Telephone: (703) 292–5360.

PURPOSE OF MEETING: Virtual site visit to provide an evaluation of the progress of the projects at the host site for the Division of Materials Research at the National Science Foundation.

AGENDA:

MAY 27, 2022

9:30 a.m.–10:00 a.m	Brief Charge to Panel	CLOSED.
10:00 a.m.–10:10 a.m	Introduction	OPEN.
10:10 a.m.–10:55 a.m	Director's Overview	OPEN.
10:55 a.m.–11:10 a.m	Discussion/Questions	OPEN.
11:10 a.m.–11:30 a.m	IRG–1 Presentation	OPEN.
11:30 a.m.–11:35 a.m	Discussion/Questions	OPEN.
11:35 a.m.–11:45 a.m	Break	OPEN.
11:45 a.m.–12:05 p.m	IRG–2 Presentation	OPEN.
12:05 p.m.–12:10 p.m	Discussion/Questions	OPEN
12:10 p.m.–12:35 p.m	Education and Outreach, Diversity Plan	OPEN.
12:35 p.m.–12:45 p.m	Discussion/Questions	OPEN.
12:45 p.m.–01:30 p.m	Working Lunch	CLOSED.
01:30 p.m.–02:30 p.m	Poster Session	OPEN.
02:30 p.m.–02:45 p.m	Site Visit Discussion	OPEN.
02:45 p.m.–03:30 p.m	Executive Session	CLOSED.
03:30 p.m.–04:00 p.m	Debriefing	OPEN.
04:00 p.m	Adjourn.	

REASON FOR CLOSING: The work being reviewed during closed portions of the virtual site visit include information of a proprietary or confidential nature, including technical information; financial data, such as salaries and personal information concerning individuals associated with the project. These matters are exempt under 5 U.S.C. 552b(c), (4) and (6) of the Government in the Sunshine Act.

Dated: January 14, 2022.

Crystal Robinson,

Committee Management Officer.

[FR Doc. 2022–01100 Filed 1–20–22; 8:45 am]

BILLING CODE 7555–01–P

NATIONAL SCIENCE FOUNDATION

Proposal Review Panel for Materials Research; Notice of Meeting

In accordance with the Federal Advisory Committee Act (Pub. L. 92–463, as amended), the National Science Foundation (NSF) announces the following meeting:

NAME AND COMMITTEE CODE: MRSEC—Irvine 2nd Year Virtual Site Visit (1203).

DATE AND TIME: May 25, 2022; 9:30 a.m.–4:00 p.m.

PLACE: NSF, 2415 Eisenhower Avenue, Alexandria, VA 22314 | Virtual.

TYPE OF MEETING: Part-Open.

CONTACT PERSON: Dr. Cosima Boswell-Koller, Program Director, Division of Materials Research, National Science Foundation, 2415 Eisenhower Avenue, Room W 9216, Alexandria, VA 22314; 703/292–8800.

PURPOSE OF MEETING: Virtual site visit to provide an evaluation of the progress of the projects at the host site for the Division of Materials Research at the National Science Foundation.

AGENDA:

MAY 25, 2022

9:30 a.m.–10:00 a.m	Brief Charge to Panel	CLOSED.
10:00 a.m.–10:10 a.m	Introduction	OPEN.
10:10 a.m.–10:55 a.m	Director's Overview	OPEN.
10:55 a.m.–11:10 a.m	Discussion/Questions	OPEN.
11:10 a.m.–11:30 a.m	IRG–1 Presentation	OPEN.
11:30 a.m.–11:35 a.m	Discussion/Questions	OPEN.
11:35 a.m.–11:45 a.m	Break	OPEN.
11:45 a.m.–12:05 p.m	IRG–2 Presentation	OPEN.
12:05 p.m.–12:10 p.m	Discussion/Questions	OPEN.
12:10 p.m.–12:35 p.m	Education and Outreach, Diversity Plan	OPEN.
12:35 p.m.–12:45 p.m	Discussion/Questions	OPEN.
12:45 p.m.–01:30 p.m	Working Lunch	CLOSED.
01:30 p.m.–02:30 p.m	Poster Session	OPEN.
02:30 p.m.–02:45 p.m	Site Visit Discussion	OPEN.

MAY 25, 2022—Continued

02:45 p.m.–03:30 p.m	Executive Session	CLOSED.
03:30 p.m.–04:00 p.m	Debriefing	OPEN.
04:00 p.m	Adjourn.	

REASON FOR CLOSING: The work being reviewed during closed portions of the virtual site visit include information of a proprietary or confidential nature, including technical information; financial data, such as salaries and personal information concerning individuals associated with the project. These matters are exempt under 5 U.S.C. 552b(c), (4) and (6) of the Government in the Sunshine Act.

Dated: January 14, 2022.

Crystal Robinson,

Committee Management Officer.

[FR Doc. 2022–01099 Filed 1–20–22; 8:45 am]

BILLING CODE 7555–01–P

NATIONAL SCIENCE FOUNDATION

Proposal Review Panel for Materials Research; Notice of Meeting

In accordance with the Federal Advisory Committee Act (Pub. L. 92–463, as amended), the National Science Foundation (NSF) announces the following meeting:

NAME AND COMMITTEE CODE: MRSEC—Columbia 2nd Year Virtual Site Visit (1203).

DATE AND TIME: April 28, 2022; 9:30 a.m.–4:00 p.m.

PLACE: NSF, 2415 Eisenhower Avenue, Alexandria, VA 22314 | Virtual.

TYPE OF MEETING: Part-Open.

CONTACT PERSON: Dr. Cosima Boswell-Koller, Program Director, Division of Materials Research, National Science Foundation, 2415 Eisenhower Avenue, Room W 9216, Alexandria, VA 22314; 703–292–8800.

PURPOSE OF MEETING: Virtual site visit to provide an evaluation of the progress of the projects at the host site for the Division of Materials Research at the National Science Foundation.

AGENDA:

APRIL 28, 2022

9:30 a.m.–10:00 a.m	Brief Charge to Panel	CLOSED.
10:00 a.m.–10:10 a.m	Introduction	OPEN.
10:10 a.m.–10:55 a.m	Director's Overview	OPEN.
10:55 a.m.–11:10 a.m	Discussion/Questions	OPEN.
11:10 a.m.–11:30 a.m	IRG–1 Presentation	OPEN.
11:30 a.m.–11:35 a.m	Discussion/Questions	OPEN.
11:35 a.m.–11:45 a.m	Break	OPEN.
11:45 a.m.–12:05 p.m	IRG–2 Presentation	OPEN.
12:05 p.m.–12:10 p.m	Discussion/Questions	OPEN.
12:10 p.m.–12:35 p.m	Education and Outreach, Diversity Plan	OPEN.
12:35 p.m.–12:45 p.m	Discussion/Questions	OPEN.
12:45 p.m.–01:30 p.m	Working Lunch	CLOSED.
01:30 p.m.–02:30 p.m	Poster Session	OPEN.
02:30 p.m.–02:45 p.m	Site Visit Discussion	OPEN.
02:45 p.m.–03:30 p.m	Executive Session	CLOSED.
03:30 p.m.–04:00 p.m	Debriefing	OPEN.
04:00 p.m	Adjourn.	

REASON FOR CLOSING: The work being reviewed during closed portions of the virtual site visit include information of a proprietary or confidential nature, including technical information; financial data, such as salaries and personal information concerning individuals associated with the project. These matters are exempt under 5 U.S.C. 552b(c), (4) and (6) of the Government in the Sunshine Act.

Dated: January 14, 2022.

Crystal Robinson,

Committee Management Officer.

[FR Doc. 2022–01093 Filed 1–20–22; 8:45 am]

BILLING CODE 7555–01–P

NATIONAL SCIENCE FOUNDATION

Proposal Review Panel for Materials Research; Notice of Meeting

In accordance with the Federal Advisory Committee Act (Pub. L. 92–463, as amended), the National Science Foundation (NSF) announces the following meeting:

NAME AND COMMITTEE CODE: MRSEC—Delaware 2nd Year Virtual Site Visit (1203).

DATE AND TIME: May 23, 2022; 9:30 a.m.–4:00 p.m.

PLACE: NSF, 2415 Eisenhower Avenue, Alexandria, VA 22314 | Virtual.

TYPE OF MEETING: Part-Open.

CONTACT PERSON: Dr. Miriam Deutsch, Program Director, Division of Materials Research, National Science Foundation, 2415 Eisenhower Avenue, Room W 9216, Alexandria, VA 22314; Telephone: (703) 292–5360.

PURPOSE OF MEETING: Virtual site visit to provide an evaluation of the progress of the projects at the host site for the Division of Materials Research at the National Science Foundation.

AGENDA:

MAY 23, 2022

9:30 a.m.–10:00 a.m	Brief Charge to Panel	CLOSED.
10:00 a.m.–10:10 a.m	Introduction	OPEN.
10:10 a.m.–10:55 a.m	Director's Overview	OPEN.
10:55 a.m.–11:10 a.m	Discussion/Questions	OPEN.
11:10 a.m.–11:30 a.m	IRG–1 Presentation	OPEN.

MAY 23, 2022—Continued

11:30 a.m.–11:35 a.m	Discussion/Questions	OPEN.
11:35 a.m.–11:45 a.m	Break	OPEN.
11:45 a.m.–12:05 p.m	IRG–2 Presentation	OPEN.
12:05 p.m.–12:10 p.m	Discussion/Questions	OPEN.
12:10 p.m.–12:35 p.m	Education and Outreach, Diversity Plan	OPEN.
12:35 p.m.–12:45 p.m	Discussion/Questions	OPEN.
12:45 p.m.–01:30 p.m	Working Lunch	CLOSED.
01:30 p.m–02:30 p.m	Poster Session	OPEN.
02:30 p.m.–02:45 p.m	Site Visit Discussion	OPEN.
02:45 p.m.–03:30 p.m	Executive Session	CLOSED.
03:30 p.m–04:00 p.m	Debriefing	OPEN.
04:00 p.m	Adjourn.	

REASON FOR CLOSING: The work being reviewed during closed portions of the virtual site visit include information of a proprietary or confidential nature, including technical information; financial data, such as salaries and personal information concerning individuals associated with the project. These matters are exempt under 5 U.S.C. 552b(c), (4) and (6) of the Government in the Sunshine Act.

Dated: January 14, 2022.

Crystal Robinson,

Committee Management Officer.

[FR Doc. 2022–01098 Filed 1–20–22; 8:45 am]

BILLING CODE 7555–01–P

NATIONAL SCIENCE FOUNDATION

Proposal Review Panel for Materials Research; Notice of Meeting

In accordance with the Federal Advisory Committee Act (Pub. L. 92–463, as amended), the National Science Foundation (NSF) announces the following meeting:

NAME AND COMMITTEE CODE: MRSEC—Penn State 2nd Year Virtual Site Visit (1203).

DATE AND TIME: May 2, 2022; 9:30 a.m.–4:00 p.m.

PLACE: NSF, 2415 Eisenhower Avenue, Alexandria, VA 22314 | Virtual.

TYPE OF MEETING: Part-Open.

CONTACT PERSON: Dr. Miriam Deutsch, Program Director, Division of Materials Research, National Science Foundation, 2415 Eisenhower Avenue, Room W 9216, Alexandria, VA 22314; Telephone: (703) 292–5360.

PURPOSE OF MEETING: Virtual site visit to provide an evaluation of the progress of the projects at the host site for the Division of Materials Research at the National Science Foundation.

AGENDA:

MAY 2, 2022

9:30 a.m.–10:00 a.m	Brief Charge to Panel	CLOSED.
10:00 a.m.–10:10 a.m	Introduction	OPEN.
10:10 a.m.–10:55 a.m	Director's Overview	OPEN.
10:55 a.m.–11:10 a.m	Discussion/Questions	OPEN.
11:10 a.m.–11:30 a.m	IRG–1 Presentation	OPEN.
11:30 a.m.–11:35 a.m	Discussion/Questions	OPEN.
11:35 a.m.–11:45 a.m	Break	OPEN.
11:45 a.m.–12:05 p.m	IRG–2 Presentation	OPEN.
12:05 p.m.–12:10 p.m	Discussion/Questions	OPEN.
12:10 p.m.–12:35 p.m	Education and Outreach, Diversity Plan	OPEN.
12:35 p.m.–12:45 p.m	Discussion/Questions	OPEN.
12:45 p.m.–01:30 p.m	Working Lunch	CLOSED.
01:30 p.m.–02:30 p.m	Poster Session	OPEN.
02:30 p.m.–02:45 p.m	Site Visit Discussion	OPEN.
02:45 p.m.–03:30 p.m	Executive Session	CLOSED.
03:30 p.m.–04:00 p.m	Debriefing	OPEN.
04:00 p.m	Adjourn.	

REASON FOR CLOSING: The work being reviewed during closed portions of the virtual site visit include information of a proprietary or confidential nature, including technical information; financial data, such as salaries and personal information concerning individuals associated with the project. These matters are exempt under 5 U.S.C. 552b(c), (4) and (6) of the Government in the Sunshine Act.

Dated: January 14, 2022.

Crystal Robinson,

Committee Management Officer.

[FR Doc. 2022–01094 Filed 1–20–22; 8:45 am]

BILLING CODE 7555–01–P

NATIONAL SCIENCE FOUNDATION

Sunshine Act Meetings

The National Science Board's Executive Committee hereby gives notice of the scheduling of a teleconference for the transaction of National Science Board business, pursuant to the National Science Foundation Act and the Government in the Sunshine Act.

TIME AND DATE: Wednesday, January 26, 2022, from 4:00–5:00 p.m. EST.

PLACE: This meeting will be held by teleconference through the National Science Foundation.

STATUS: Open.

MATTERS TO BE CONSIDERED: Committee Chair's opening remarks; approval of Executive Committee minutes of November 8, 2021; and discuss issues and topics for an agenda of the NSB

meeting scheduled for February 23–24, 2022.

CONTACT PERSON FOR MORE INFORMATION: Point of contact for this meeting is: Nirmala Kannankutty, 703/292–8000. To listen to this teleconference, members of the public must send an email to *nationalsciencebrd@nsf.gov* at least 24 hours prior to the teleconference. The National Science Board Office will send requesters a toll-free dial-in number. Meeting information and updates may be found at *www.nsf.gov/nsb.*

Chris Blair,

Executive Assistant to the National Science Board Office.

[FR Doc. 2022–01213 Filed 1–19–22; 11:15 am]

BILLING CODE 7555–01–P

NUCLEAR REGULATORY COMMISSION

[NRC–2022–0001]

Sunshine Act Meetings

TIME AND DATE: Weeks of January 24, 31, February 7, 14, 21, 28, 2022.

PLACE: Commissioners' Conference Room, 11555 Rockville Pike, Rockville, Maryland.

STATUS: Public.

MATTERS TO BE CONSIDERED:

Week of January 24, 2022

Thursday, January 27, 2022

8:55 a.m. Affirmation Session (Public Meeting) (Tentative) Draft Final Rule—Enhanced Weapons, Firearms Background Checks, and Security Event Notifications (RIN–3150–AI49; NRC–2011–0014, NRC–2011–0015, NRC–2011–0017, and NRC–2011–0018) (Tentative); (Contact: Wesley Held: 301–287–3591)

Additional Information: The public is invited to attend the Commission's meeting live by webcast at the Web address—*https://video.nrc.gov/.*

9:00 a.m. Strategic Programmatic Overview of the Decommissioning and Low-Level Waste and Nuclear Materials Users Business Lines (Public Meeting); (Contact: Celimar Valentin-Rodriguez: 301–415–7124)

Additional Information: The public is invited to attend the Commission's meeting live by webcast at the Web address—*https://video.nrc.gov/.*

Week of January 31, 2022—Tentative

There are no meetings scheduled for the week of January 31, 2022.

Week of February 7, 2022—Tentative

Tuesday, February 8, 2022

10:00 a.m. Meeting with the Organization of Agreement States and the Conference of Radiation Control Program Directors (Public Meeting); (Contact: Celimar Valentin-Rodriguez: 301–415–7124)

Additional Information: The public is invited to attend the Commission's meeting live by webcast at the Web address—*https://video.nrc.gov/.* For those who would like to attend in person, note that all visitors are required to complete the NRC Self-Health Assessment and Certification of Vaccination forms. Visitors who certify that they are not fully vaccinated or decline to complete the certification must have proof of a negative Food and Drug Administration-approved polymerase chain reaction (PCR) or Antigen (including rapid tests) COVID–19 test specimen collection from no later than the previous 3 days prior to entry to an NRC facility. The forms and additional information can be found here *https://www.nrc.gov/about-nrc/covid-19/guidance-for-visitors-to-nrc-facilities.pdf.*

Week of February 14, 2022—Tentative

There are no meetings scheduled for the week of February 14, 2022.

Week of February 21, 2022—Tentative

Thursday, February 24, 2022

10:00 a.m. Briefing on Regulatory Research Program Activities (Public Meeting); (Contact: Nick Difrancesco: 301–415–1115)

Additional Information: The public is invited to attend the Commission's meeting live by webcast at the Web address—*https://video.nrc.gov/.* For those who would like to attend in person, note that all visitors are required to complete the NRC Self-Health Assessment and Certification of Vaccination forms. Visitors who certify that they are not fully vaccinated or decline to complete the certification must have proof of a negative Food and Drug Administration-approved polymerase chain reaction (PCR) or Antigen (including rapid tests) COVID–19 test specimen collection from no later than the previous 3 days prior to entry to an NRC facility. The forms and additional information can be found here *https://www.nrc.gov/about-nrc/covid-19/guidance-for-visitors-to-nrc-facilities.pdf.*

Week of February 28, 2022—Tentative

There are no meetings scheduled for the week of February 28, 2022.

CONTACT PERSON FOR MORE INFORMATION: For more information or to verify the status of meetings, contact Wesley Held at 301–287–3591 or via email at *Wesley.Held@nrc.gov.* The schedule for Commission meetings is subject to change on short notice.

The NRC Commission Meeting Schedule can be found on the internet at: *https://www.nrc.gov/public-involve/public-meetings/schedule.html.*

The NRC provides reasonable accommodation to individuals with disabilities where appropriate. If you need a reasonable accommodation to participate in these public meetings or need this meeting notice or the transcript or other information from the public meetings in another format (*e.g.,* braille, large print), please notify Anne Silk, NRC Disability Program Specialist, at 301–287–0745, by videophone at 240–428–3217, or by email at *Anne.Silk@nrc.gov.* Determinations on requests for reasonable accommodation will be made on a case-by-case basis.

Members of the public may request to receive this information electronically. If you would like to be added to the distribution, please contact the Nuclear Regulatory Commission, Office of the Secretary, Washington, DC 20555, at 301–415–1969, or by email at *Tyesha.Bush@nrc.gov* or *Betty.Thweatt@nrc.gov.*

The NRC is holding the meetings under the authority of the Government in the Sunshine Act, 5 U.S.C. 552b.

Dated: January 19, 2022.

For the Nuclear Regulatory Commission.

Wesley W. Held,

Policy Coordinator, Office of the Secretary.

[FR Doc. 2022–01288 Filed 1–19–22; 4:15 pm]

BILLING CODE 7590–01–P

NUCLEAR REGULATORY COMMISSION

[Docket Nos. 50–295, 50–304, 72–1037, 50–320, 50–409, 72–046, 030–39013, 11005620, and 11005897; NRC–2021–0232]

Zion Nuclear Power Station, Units 1 and 2; Three Mile Island Nuclear Station, Unit 2; La Crosse Boiling Water Reactor; EnergySolutions, LLC Radioactive Materials License; EnergySolutions, LLC Export Licenses; Consideration of Approval of Indirect Transfer of Licenses

AGENCY: Nuclear Regulatory Commission.

ACTION: Application for indirect transfer of licenses; opportunity to comment, request a hearing, and petition for leave to intervene.

SUMMARY: The U.S. Nuclear Regulatory Commission (NRC) received and is considering approval of a license transfer application filed by Energy*Solutions,* LLC (Energy*Solutions*) on December 7, 2021. The application seeks NRC approval of the indirect transfer of Facility Operating License Nos. DPR–39 and DPR–48 for Zion Nuclear Power Station (Zion), Units 1 and 2, respectively, and the general license for the Zion independent spent fuel storage installation (ISFSI); Possession Only License No. DPR–73 for Three Mile Island Nuclear Station, Unit 2 (TMI–2); Possession Only License No. DPR–45 for La Crosse Boiling Water Reactor (La Crosse) and the general license for the La Crosse ISFSI; Radioactive Materials License No. 39–35044–01; and Export Licenses XW010/04 and XW018/01 from the current principal shareholders of the Energy*Solutions* parent company Rockwell Holdco, Inc. (Rockwell) and other investors to a majority ownership by TriArtisan ES Partners, LLC (TriArtisan). The application contains sensitive unclassified non-safeguards information (SUNSI).

DATES: Submit Comments by February 22, 2022. A request for a hearing must be filed by February 10, 2022. Any potential party as defined in § 2.4 of title 10 of the *Code of Federal Regulations* (10 CFR), who believes access to SUNSI is necessary to respond to this notice must follow the instructions in Section VI of the **SUPPLEMENTARY INFORMATION** section of this notice.

ADDRESSES: Please refer to Docket ID NRC–2021–0232 when contacting the NRC about the availability of information regarding this document. You may obtain publicly available information related to this document using any of the following methods:

- *Federal Rulemaking Website:* Go to *https://www.regulations.gov* and search for Docket ID NRC–2021–0232. Address questions about Docket IDs in *Regulations.gov* to Stacy Schumann; telephone: 301–415–0624; email: *Stacy.Schumann@nrc.gov.* For technical questions, contact the individual(s) listed in the **FOR FURTHER INFORMATION CONTACT** section of this document.
- *NRC's Agencywide Documents Access and Management System (ADAMS):* You may obtain publicly available documents online in the ADAMS Public Documents collection at *https://www.nrc.gov/reading-rm/adams.html.* To begin the search, select ''Begin Web-based ADAMS Search.'' For problems with ADAMS, please contact the NRC's Public Document Room (PDR) reference staff at 1–800–397–4209, 301–415–4737, or by email to *PDR.Resource@nrc.gov.* The ADAMS accession number for each document referenced (if it is available in ADAMS) is provided the first time that it is mentioned in this document.
- *NRC's PDR:* You may examine and purchase copies of public documents, by appointment, at the NRC's PDR, Room P1 B35, One White Flint North, 11555 Rockville Pike, Rockville, Maryland 20852. To make an appointment to visit the PDR, please send an email to *PDR.Resource@nrc.gov* or call 1–800–397–4209 or 301–415–4737, between 8:00 a.m. and 4:00 p.m. (ET), Monday through Friday, except Federal holidays.

FOR FURTHER INFORMATION CONTACT: Jack D. Parrott, Office of Nuclear Material Safety and Safeguards, U.S. Nuclear Regulatory Commission, Washington, DC 20555–0001; telephone: 301–415–6634, email: *Jack.Parrott@nrc.gov.*

SUPPLEMENTARY INFORMATION:

I. Obtaining Information and Submitting Comments

A. Obtaining Information

Please refer to Docket ID NRC–2021–0232 when contacting the NRC about the availability of information for this action. You may obtain publicly available information related to this action by any of the following methods:

- *Federal Rulemaking Website:* Go to *https://www.regulations.gov* and search for Docket ID NRC–2021–0232.
- *NRC's Agencywide Documents Access and Management System (ADAMS):* You may obtain publicly available documents online in the ADAMS Public Documents collection at *https://www.nrc.gov/reading-rm/adams.html.* To begin the search, select ''Begin Web-based ADAMS Search.'' For problems with ADAMS, please contact the NRC's Public Document Room (PDR) reference staff at 1–800–397–4209, 301–415–4737, or by email to *PDR.Resource@nrc.gov.* The ADAMS accession number for each document referenced (if it is available in ADAMS) is provided the first time that it is mentioned in this document.
- *NRC's PDR:* You may examine and purchase copies of public documents, by appointment, at the NRC's PDR, Room P1 B35, One White Flint North, 11555 Rockville Pike, Rockville, Maryland 20852. To make an appointment to visit the PDR, please send an email to *PDR.Resource@nrc.gov* or call 1–800–397–4209 or 301–415–4737, between 8:00 a.m. and 4:00 p.m. (ET), Monday through Friday, except Federal holidays.

B. Submitting Comments

The NRC encourages electronic comment submission through the Federal Rulemaking website (*https://www.regulations.gov*). Please include Docket ID NRC–2021–0232 in your comment submission.

The NRC cautions you not to include identifying or contact information that you do not want to be publicly disclosed in your comment submission. The NRC will post all comment submissions at *https://www.regulations.gov* as well as enter the comment submissions into ADAMS. The NRC does not routinely edit comment submissions to remove identifying or contact information.

If you are requesting or aggregating comments from other persons for submission to the NRC, then you should inform those persons not to include identifying or contact information that they do not want to be publicly disclosed in their comment submission. Your request should state that the NRC does not routinely edit comment submissions to remove such information before making the comment submissions available to the public or entering the comment into ADAMS.

II. Introduction

The NRC is considering the issuance of an order under 10 CFR 30.34(b), 50.80, 72.50, and 110.50(d) approving the indirect transfer of control of Facility Operating License Nos. DPR–39 and DPR–48 for Zion, Units 1 and 2, respectively, and the general license for the Zion ISFSI; Possession Only License No. DPR–73 for TMI–2; Possession Only License No. DPR–45 for La Crosse and the general license for the La Crosse ISFSI; Radioactive Materials License No. 39–35044–01; and Export Licenses XW010/04 and XW018/01 from the current principal shareholders of the Energy*Solutions* parent company Rockwell and other investors to a majority ownership by TriArtisan. Rockwell is currently approximately 58 percent owned and controlled by passive investment funds affiliated with Energy Capital Partners GP II, LP and approximately 40 percent owned by passive investment funds affiliated with TriArtisan. As described in the application, through the proposed transaction, passive investment funds affiliated with TriArtisan would acquire majority ownership of Rockwell and governance control.

According to the application for approval filed by, Energy*Solutions* and its wholly owned subsidiaries that hold the referenced NRC licenses, Energy*Solutions* will maintain

responsibility for all licensed activities at the facilities, including the responsibility to complete decommissioning and carry out spent nuclear fuel management in accordance with NRC regulations, and the proposed transaction would not affect their organizations or operations, nor would it have any material impact on their existing technical and financial qualifications.

The NRC's regulations at 10 CFR 30.34(b), 50.80, and 72.50 state that no license, or any right thereunder, shall be transferred, directly or indirectly, through transfer of control of the license, unless the Commission gives its consent in writing. The NRC's regulations at 10 CFR 110.50(d) state that a specific export license may be transferred only with the approval of the Commission. The Commission will approve an application for the indirect transfer of a license, if the Commission determines that the proposed transfer will not affect the qualifications of the licensee to hold the license, and that the transfer is otherwise consistent with applicable provisions of law, regulations, and orders issued by the Commission.

III. Opportunity To Comment

Within 30 days from the date of publication of this notice, persons may submit written comments regarding the license transfer application, as provided for in 10 CFR 2.1305. The Commission will consider and, if appropriate, respond to these comments, but such comments will not otherwise constitute part of the decisional record. Comments should be submitted as described in the **ADDRESSES** section of this document.

IV. Opportunity To Request a Hearing and Petition for Leave To Intervene

Within 20 days after the date of publication of this notice, any person (petitioner) whose interest may be affected by this action may file a request for a hearing and petition for leave to intervene (petition) with respect to the action. Petitions shall be filed in accordance with the Commission's ''Agency Rules of Practice and Procedure'' in 10 CFR part 2. Interested persons should consult 10 CFR 2.309. The NRC's regulations are accessible electronically from the NRC Library on the NRC's website at *https://www.nrc.gov/reading-rm/doc-collections/cfr/.* Alternatively, a copy of the regulations are available at the NRC's Public Document Room, located at One White Flint North, Room O1–F21, 11555 Rockville Pike (First Floor), Rockville, Maryland 20852. If a petition is filed, the presiding officer will rule on the petition and, if appropriate, a notice of a hearing will be issued.

As required by 10 CFR 2.309(d) the petition should specifically explain the reasons why intervention should be permitted with particular reference to the following general requirements for standing: (1) The name, address, and telephone number of the petitioner; (2) the nature of the petitioner's right to be made a party to the proceeding; (3) the nature and extent of the petitioner's property, financial, or other interest in the proceeding; and (4) the possible effect of any decision or order which may be entered in the proceeding on the petitioner's interest.

In accordance with 10 CFR 2.309(f), the petition must also set forth the specific contentions which the petitioner seeks to have litigated in the proceeding. Each contention must consist of a specific statement of the issue of law or fact to be raised or controverted. In addition, the petitioner must provide a brief explanation of the bases for the contention and a concise statement of the alleged facts or expert opinion which support the contention and on which the petitioner intends to rely in proving the contention at the hearing. The petitioner must also provide references to the specific sources and documents on which the petitioner intends to rely to support its position on the issue. The petition must include sufficient information to show that a genuine dispute exists with the applicant or licensee on a material issue of law or fact. Contentions must be limited to matters within the scope of the proceeding. The contention must be one which, if proven, would entitle the petitioner to relief. A petitioner who fails to satisfy the requirements at 10 CFR 2.309(f) with respect to at least one contention will not be permitted to participate as a party.

Those permitted to intervene become parties to the proceeding, subject to any limitations in the order granting leave to intervene. Parties have the opportunity to participate fully in the conduct of the hearing with respect to resolution of that party's admitted contentions, including the opportunity to present evidence, consistent with the NRC's regulations, policies, and procedures.

Petitions must be filed no later than 20 days from the date of publication of this notice in accordance with the filing instructions in the ''Electronic Submissions (E-Filing'') section of this document. Petitions and motions for leave to file new or amended contentions that are filed after the deadline will not be entertained absent a determination by the presiding officer that the filing demonstrates good cause by satisfying the three factors in 10 CFR 2.309(c)(1)(i) through (iii).

A State, local governmental body, Federally recognized Indian Tribe, or agency thereof, may submit a petition to the Commission to participate as a party under 10 CFR 2.309(h)(1). The petition should state the nature and extent of the petitioner's interest in the proceeding. The petition should be submitted to the Commission no later than 20 days from the date of publication of this notice. The petition must be filed in accordance with the filing instructions in the ''Electronic Submissions (E-Filing)'' section of this document, and should meet the requirements for petitions set forth in this section. Alternatively, a State, local governmental body, Federally recognized Indian Tribe, or agency thereof may participate as a non-party under 10 CFR 2.315(c).

If a hearing is granted, any person who is not a party to the proceeding and is not affiliated with or represented by a party may, at the discretion of the presiding officer, be permitted to make a limited appearance pursuant to the provisions of 10 CFR 2.315(a). A person making a limited appearance may make an oral or written statement of his or her position on the issues but may not otherwise participate in the proceeding. A limited appearance may be made at any session of the hearing or at any prehearing conference, subject to the limits and conditions as may be imposed by the presiding officer. Details regarding the opportunity to make a limited appearance will be provided by the presiding officer if such sessions are scheduled.

V. Electronic Submissions (E-Filing)

All documents filed in NRC adjudicatory proceedings including documents filed by an interested State, local governmental body, Federally recognized Indian Tribe, or agency thereof that requests to participate under 10 CFR 2.315(c), must be filed in accordance with 10 CFR 2.302. The E-Filing process requires participants to submit and serve all adjudicatory documents over the internet, or in some cases, to mail copies on electronic storage media, unless an exemption permitting an alternative filing method, as discussed below, is granted. Detailed guidance on electronic submissions is located in the Guidance for Electronic Submissions to the NRC (ADAMS Accession No. ML13031A056) and on the NRC website at *https://www.nrc.gov/site-help/e-submittals.html.*

To comply with the procedural requirements of E-Filing, at least 10 days prior to the filing deadline, the participant should contact the Office of

the Secretary by email at *Hearing.Docket@nrc.gov,* or by telephone at 301–415–1677, to (1) request a digital identification (ID) certificate, which allows the participant (or its counsel or representative) to digitally sign submissions and access the E-Filing system for any proceeding in which it is participating; and (2) advise the Secretary that the participant will be submitting a petition or other adjudicatory document (even in instances in which the participant, or its counsel or representative, already holds an NRC-issued digital ID certificate). Based upon this information, the Secretary will establish an electronic docket for the proceeding if the Secretary has not already established an electronic docket.

Information about applying for a digital ID certificate is available on the NRC's public website at *https://www.nrc.gov/site-help/e-submittals/getting-started.html.* After a digital ID certificate is obtained and a docket created, the participant must submit adjudicatory documents in Portable Document Format. Guidance on submissions is available on the NRC's public website at *https://www.nrc.gov/site-help/electronic-sub-ref-mat.html.* A filing is considered complete at the time the document is submitted through the NRC's E-Filing system. To be timely, an electronic filing must be submitted to the E-Filing system no later than 11:59 p.m. Eastern Time on the due date. Upon receipt of a transmission, the E-Filing system timestamps the document and sends the submitter an email confirming receipt of the document. The E-Filing system also distributes an email that provides access to the document to the NRC's Office of the General Counsel and any others who have advised the Office of the Secretary that they wish to participate in the proceeding, so that the filer need not serve the document on those participants separately. Therefore, applicants and other participants (or their counsel or representative) must apply for and receive a digital ID certificate before adjudicatory documents are filed to obtain access to the documents via the E-Filing system.

A person filing electronically using the NRC's adjudicatory E-Filing system may seek assistance by contacting the NRC's Electronic Filing Help Desk through the ''Contact Us'' link located on the NRC's public website at *https://www.nrc.gov/site-help/e-submittals.html,* by email to *MSHD.Resource@nrc.gov,* or by a toll-free call at 1–866–672–7640. The NRC Electronic Filing Help Desk is available between 9 a.m. and 6 p.m., Eastern Time, Monday through Friday, excluding government holidays.

Participants who believe that they have good cause for not submitting documents electronically must file an exemption request, in accordance with 10 CFR 2.302(g), with their initial paper filing stating why there is good cause for not filing electronically and requesting authorization to continue to submit documents in paper format. Such filings must be submitted in accordance with 10 CFR 2.302(b)–(d). Participants filing adjudicatory documents in this manner are responsible for serving their documents on all other participants. Participants granted an exemption under 10 CFR 2.302(g)(2) must still meet the electronic formatting requirement in 10 CFR 2.302(g)(1), unless the participant also seeks and is granted an exemption from 10 CFR 2.302(g)(1).

Documents submitted in adjudicatory proceedings will appear in the NRC's electronic hearing docket, which is publicly available at *https://adams.nrc.gov/ehd,* unless excluded pursuant to an order of the presiding officer. If you do not have an NRC-issued digital ID certificate as described above, click ''cancel'' when the link requests certificates and you will be automatically directed to the NRC's electronic hearing dockets where you will be able to access any publicly available documents in a particular hearing docket. Participants are requested not to include personal privacy information such as social security numbers, home addresses, or personal phone numbers in their filings unless an NRC regulation or other law requires submission of such information. With respect to copyrighted works, except for limited excerpts that serve the purpose of the adjudicatory filings and would constitute a Fair Use application, participants should not include copyrighted materials in their submission.

The Commission will issue a notice or order granting or denying a hearing request or intervention petition, designating the issues for any hearing that will be held and designating the Presiding Officer. A notice granting a hearing will be published in the **Federal Register** and served on the parties to the hearing.

For further details with respect to this application, see the application dated December 7, 2021 (ADAMS Package Accession No. ML21344A114).

VI. Access to Sensitive Unclassified Non-Safeguards Information for Contention Preparation

Any person who desires access to proprietary, confidential commercial information that has been redacted from the application should contact the applicant by telephoning Gerard P. Van Noordennen, Senior Vice President Regulatory Affairs, Energy*Solutions,* LLC, 121 West Trade Street, Charlotte, North Carolina 28202, at 860–462–9707 for the purpose of negotiating a confidentiality agreement or a proposed protective order with the applicant. If no agreement can be reached, persons who desire access to this information may file a motion with the Secretary and addressed to the Commission that requests the issuance of a protective order.

Dated: January 18, 2022.

For the Nuclear Regulatory Commission.

Bruce A. Watson,

Chief, Reactor Decommissioning Branch, Division of Decommissioning Uranium Recovery and Waste Programs, Office of Nuclear Material Safety and Safeguards.

[FR Doc. 2022–01175 Filed 1–20–22; 8:45 am]

BILLING CODE 7590–01–P

SECURITIES AND EXCHANGE COMMISSION

Sunshine Act Meetings

TIME AND DATE: Notice is hereby given, pursuant to the provisions of the Government in the Sunshine Act, Public Law 94–409, that the Securities and Exchange Commission will hold an Open Meeting on Wednesday, January 26, 2022 at 10:00 a.m.

PLACE: The meeting will be webcast on the Commission's website at *www.sec.gov.*

STATUS: The meeting will begin at 10:00 a.m. (ET) and will be open to the public via webcast on the Commission's website at *www.sec.gov.*

MATTERS TO BE CONSIDERED:

1. The Commission will consider whether to propose amendments to Form PF to require current reporting and amend reporting requirements.

2. The Commission will consider whether to propose amendments to the definition of an exchange under the Securities Exchange Act of 1934 and re-propose amendments to Regulation ATS for ATSs That Trade U.S. Government Securities, NMS Stock, and Other Securities and to Regulation SCI for ATSs That Trade U.S. Government Securities.

CONTACT PERSON FOR MORE INFORMATION: For further information and to ascertain

what, if any, matters have been added, deleted or postponed, please contact Vanessa A. Countryman from the Office of the Secretary at (202) 551–5400.

Authority: 5 U.S.C. 552b.

Dated: January 19, 2022.

Vanessa A. Countryman,

Secretary.

[FR Doc. 2022–01315 Filed 1–19–22; 4:15 pm]

BILLING CODE 8011–01–P

DEPARTMENT OF STATE

[Public Notice: 11634]

Waiver of Missile Proliferation Sanctions Against Foreign Persons

ACTION: Notice.

SUMMARY: A determination has been made pursuant to the Arms Export Control Act and Export Administration Act.

SUPPLEMENTARY INFORMATION: Consistent with section 654(c) of the Foreign Assistance Act of 1961, as amended, notice is hereby given that the Secretary of State has made a determination pursuant to Section 73 of the Arms Export Control Act (22 U.S.C. 2797b) and Section 11B(b) of the Export Administration Act of 1979 (50 U.S.C. 4612). [Note: Although the Export Administration Act of 1979 lapsed in 2001 and was partially repealed in 2018, authorities under Section 11B continue to be carried out under the International Emergency Economic Powers Act, 50 U.S.C. 1701–1708, pursuant to the emergency declared in E.O. 13222 of August 17, 2001, which has been kept in effect by successive Presidential Notices, the most recent of which was the Notice of August 6, 2021, 86 FR 43901, (Aug. 10, 2021).] The Secretary of State has concluded that publication of the determination would be harmful to the national security of the United States.

Choo S. Kang,

Acting Assistant Secretary, International Security and Nonproliferation, Department of State.

[FR Doc. 2022–01116 Filed 1–20–22; 8:45 am]

BILLING CODE 4710–25–P

DEPARTMENT OF STATE

[Public Notice: 11633]

Imposition of Missile Proliferation Sanctions on Three Entities in the People's Republic of China (PRC)

ACTION: Notice.

SUMMARY: A determination has been made that PRC entities have engaged in activities that require the imposition of measures pursuant to the Arms Export Control Act, as amended, and the Export Administration Act of 1979, as amended.

FOR FURTHER INFORMATION CONTACT: Pam Durham, Office of Missile, Biological, and Chemical Nonproliferation, Bureau of International Security and Nonproliferation, Department of State (202–647–4930). On import ban issues, Lauren Sun, Assistant Director for Regulatory Affairs, Department of the Treasury (202–622–4855). On U.S. Government procurement ban issues, Eric Moore, Office of the Procurement Executive, Department of State (703–875–4079).

SUPPLEMENTARY INFORMATION: Pursuant to Section 73(a)(1) of the Arms Export Control Act [22 U.S.C. 2797b(a)(1)]; Section 11B(b)(1) of the Export Administration Act of 1979 [(50 U.S.C. 4612)], as carried out under E.O. 13222 of August 17, 2001 (hereinafter cited as the ''Export Administration Act of 1979''); [Note: Although the Export Administration Act of 1979 lapsed in 2001 and was partially repealed in 2018, authorities under Section 11B continue to be carried out under the International Emergency Economic Powers Act, 50 U.S.C. 1701–1708, pursuant to the emergency declared in E.O. 13222 of August 17, 2001, which has been kept in effect by successive Presidential Notices, the most recent of which was the Notice of August 6, 2021, 86 FR 43901, (Aug. 10, 2021). End Note], the U.S. Government has determined that the following foreign persons have engaged in missile technology proliferation activities that require the imposition of the sanctions described in Sections 73(a)(2)(B) and (C) of the Arms Export Control Act [22 U.S.C. 2797b(a)(2)(B) and (C)] and Sections 11B(b)(1)(B)(ii) and (iii) of the Export Administration Act of 1979 [50 U.S.C. app. 2410b(b)(1)(B)(ii) and (iii)] on these entities:

China Aerospace Science and Technology Corporation (CASC) First Academy, and its sub-units and successors;

China Aerospace Science and Industry Corporation (CASIC) Fourth Academy, and its sub-units and successors; and

Poly Technologies Incorporated (PTI), and its sub-units and successors.

Accordingly, the following sanctions are being imposed on these entities for two years:

(A) Denial of all new individual licenses for the transfer to the sanctioned entities of all items on the U.S. Munitions List and all items the export of which is controlled under the Export Control Reform Act (ECRA) of 2018;

(B) Denial of all U.S. Government contracts with the sanctioned entities; and

(C) Prohibition on the importation into the United States of all products produced by the sanctioned entities.

With respect to items controlled pursuant to the ECRA of 2018, the above export sanction only applies to exports made pursuant to individual export licenses.

These measures shall be implemented by the responsible departments and agencies of the United States Government as provided in E.O. 12851 of June 11, 1993.

Choo S. Kang,

Acting Assistant Secretary, International Security and Nonproliferation, Department of State.

[FR Doc. 2022–01117 Filed 1–20–22; 8:45 am]

BILLING CODE 4710–25–P

SURFACE TRANSPORTATION BOARD

[Docket No. FD 36571]

Verdigris Southern Railroad, L.L.C.—Lease and Operation Exemption—Track in Rogers County, Okla.

Verdigris Southern Railroad, L.L.C. (VESO), a noncarrier, has filed a verified notice of exemption under 49 CFR 1150.31 to lease from the City of Tulsa–Rogers County Port Authority (the Port), and to commence common carrier operations over, certain track owned by the Port (also a noncarrier) located in Rogers County, Okla. (the Line). The Line extends from the point of connection to the northwest-southeast-running Union Pacific Railroad Company (UP) Wagoner Subdivision mainline at UP milepost 594.76 at Inola, Okla., westward for a distance of approximately 13,883 feet to an end point to the west of the Line's at-grade crossing of State Road S 4200. According to VESO, the Line currently serves as a private track and has no mileposts of its own.

This transaction is related to a verified notice of exemption filed concurrently in *Watco Holdings, Inc.—Continuance in Control Exemption—Verdigris Southern Railroad,* Docket No. FD 36572, in which Watco Holdings, Inc., seeks to continue in control of VESO upon VESO's becoming a Class III rail carrier.

The verified notice states that VESO and the Port have entered into a Track

Lease and Operating Agreement (Agreement) pursuant to which VESO will lease and operate the Line as a common carrier.[1]

VESO certifies that its projected annual revenues from this transaction will not result in its becoming a Class I or Class II rail carrier and will not exceed $5 million. VESO also certifies that the Agreement does not include an interchange commitment.

The earliest this transaction may be consummated is February 6, 2022, the effective date of the exemption (30 days after the verified notice was filed).

If the verified notice contains false or misleading information, the exemption is void ab initio. Petitions to revoke the exemption under 49 U.S.C. 10502(d) may be filed at any time. The filing of a petition to revoke will not automatically stay the effectiveness of the exemption. Petitions for stay must be filed no later than January 28, 2022 (at least seven days before the exemption becomes effective).

All pleadings, referring to Docket No. FD 36571, should be filed with the Surface Transportation Board via e-filing on the Board's website. In addition, a copy of each pleading must be served on VESO's representative, Bradon J. Smith, Fletcher & Sippel LLC, 29 North Wacker Drive, Suite 800, Chicago, IL 60606.

According to VESO, this action is categorically excluded from environmental review under 49 CFR 1105.6(c) and from historic preservation reporting requirements under 49 CFR 1105.8(b).

Board decisions and notices are available at *www.stb.gov.*

Decided: January 14, 2022.

By the Board, Scott M. Zimmerman, Acting Director, Office of Proceedings.

Jeffrey Herzig,

Clearance Clerk.

[FR Doc. 2022–01152 Filed 1–20–22; 8:45 am]

BILLING CODE 4915–01–P

SURFACE TRANSPORTATION BOARD

[Docket No. FD 36572]

Watco Holdings, Inc.—Continuance in Control Exemption—Verdigris Southern Railroad, L.L.C.

Watco Holdings, Inc. (Watco), a noncarrier, has filed a verified notice of exemption under 49 CFR 1180.2(d)(2) to continue in control of Verdigris Southern Railroad, L.L.C. (VESO), a noncarrier controlled by Watco, upon VESO's becoming a Class III rail carrier.

This transaction is related to a verified notice of exemption filed concurrently in *Verdigris Southern Railroad, L.L.C.—Lease and Operation Exemption—Track in Rogers County, Okla.,* Docket No. FD 36571, in which VESO seeks to lease from the City of Tulsa–Rogers County Port Authority (the Port), and to commence common carrier operations over, approximately 13,883 feet of track owned by the Port in Rogers County, Okla.

The transaction may be consummated on or after February 6, 2022, the effective date of the exemption (30 days after the verified notice was filed).

According to the verified notice of exemption, Watco currently controls indirectly 40 Class III railroads and one Class II railroad, collectively operating in 28 states. For a complete list of these rail carriers and the states in which they operate, see the Appendix to Watco's January 7, 2022 verified notice of exemption, available at *www.stb.gov.*

Watco represents that: (1) The rail line to be operated by VESO does not connect with the rail lines of any of the rail carriers currently controlled by Watco; (2) this transaction is not part of a series of anticipated transactions that would connect VESO with any railroad in the Watco corporate family; and (3) the transaction does not involve a Class I rail carrier. The proposed transaction is therefore exempt from the prior approval requirements of 49 U.S.C. 11323 pursuant to 49 CFR 1180.2(d)(2). Under 49 U.S.C. 10502(g), the Board may not use its exemption authority to relieve a rail carrier of its statutory obligation to protect the interests of its employees. Because the transaction involves the control of one Class II and one or more Class III rail carriers, the transaction is subject to the labor protection requirements of 49 U.S.C. 11326(b) and *Wisconsin Central Ltd.—Acquisition Exemption—Lines of Union Pacific Railroad,* 2 S.T.B. 218 (1997).

If the verified notice contains false or misleading information, the exemption is void ab initio. Petitions to revoke the exemption under 49 U.S.C. 10502(d) may be filed at any time. The filing of a petition to revoke will not automatically stay the effectiveness of the exemption. Petitions for stay must be filed no later than January 28, 2022 (at least seven days before the exemption becomes effective).

All pleadings, referring to Docket No. FD 36572, should be filed with the Surface Transportation Board via e-filing on the Board's website. In addition, one copy of each pleading must be served on Watco's representative, Bradon J. Smith, Fletcher & Sippel LLC, 29 North Wacker Drive, Suite 800, Chicago, IL 60606.

According to Watco, this action is categorically excluded from environmental review under 49 CFR 1105.6(c) and from historic reporting requirements under 49 CFR 1105.8(b).

Board decisions and notices are available at *www.stb.gov.*

Decided: January 14, 2022.

By the Board, Scott M. Zimmerman, Acting Director, Office of Proceedings.

Brendetta Jones,

Clearance Clerk.

[FR Doc. 2022–01154 Filed 1–20–22; 8:45 am]

BILLING CODE 4915–01–P

[1] Public and confidential versions of the Agreement were filed with the verified notice. The confidential version was submitted under seal concurrently with a motion for protective order, which is addressed in a separate decision.

DEPARTMENT OF TRANSPORTATION

Federal Aviation Administration

Notice of Request To Release Airport Property for Land Disposal

AGENCY: Federal Aviation Administration (FAA), DOT.

ACTION: Notice of request to rule on release of airport property for land disposal at the Ottumwa Regional Airport (OTM), Ottumwa, Iowa.

SUMMARY: The FAA proposes to rule and invites public comment on the release of land at the Ottumwa Regional Airport (OTM), Ottumwa, Iowa.

DATES: Comments must be received on or before February 22, 2022.

ADDRESSES: Comments on this application may be mailed or delivered to the FAA at the following address: Amy J. Walter, Airports Land Specialist, Federal Aviation Administration, Airports Division, ACE–620G, 901 Locust, Room 364, Kansas City, MO 64106.

In addition, one copy of any comments submitted to the FAA must be mailed or delivered to: Zach Simonson, Community Development Director, City of Ottumwa, 105 East Third Street, Ottumwa, Iowa 52501, (641) 683–0694.

FOR FURTHER INFORMATION CONTACT: Amy J. Walter, Airports Land Specialist, Federal Aviation Administration, Airports Division, ACE–620G, 901 Locust, Room 364, Kansas City, MO 64106, (816) 329–2603, *amy.walter@faa.gov.* The request to release property may be reviewed, by appointment, in person at this same location.

SUPPLEMENTARY INFORMATION: The FAA invites public comment on the request to release two tracts of land: Parcel 64 is 4.51 acres and parcel 67 is 2.06 acres

of airport property at the Ottumwa Regional Airport (OTM) under the provisions of 49 U.S.C. 47107(h)(2). Representatives of the Sponsor requested a release from the FAA to sell two tracts of land, 4.51 acres and 2.06 acres respectively. Both parcels will be developed for light industrial use. The FAA determined the request to release property at the Ottumwa Regional Airport (OTM) submitted by the Sponsor meets the procedural requirements of the Federal Aviation Administration and the release of the property does not and will not impact future aviation needs at the airport. The FAA may approve the request, in whole or in part, no sooner than thirty days after the publication of this notice.

The following is a brief overview of the request:

The Ottumwa Regional Airport (OTM) is proposing the release of two airport parcels containing 4.51 acres and 2.06 acres. The release of land is necessary to comply with Federal Aviation Administration Grant Assurances that do not allow federally acquired airport property to be used for non-aviation purposes. The sale of the subject property will result in the land at the Ottumwa Regional Airport (OTM) being changed from aeronautical to non-aeronautical use and release the lands from the conditions of the Airport Improvement Program Grant Agreement Grant Assurances in order to dispose of the land. In accordance with 49 U.S.C. 47107(c)(2)(B)(i) and (iii), the airport will receive fair market value for the property, which will be subsequently reinvested in another eligible airport improvement project for general aviation use.

Any person may inspect, by appointment, the request in person at the FAA office listed above under **FOR FURTHER INFORMATION CONTACT**. In addition, any person may, upon appointment and request, inspect the application, notice and other documents determined by the FAA to be related to the application in person at the Ottumwa City Hall.

Issued in Kansas City, MO, on January 18, 2022.

James A. Johnson,

Director, FAA Central Region, Airports Division.

[FR Doc. 2022–01173 Filed 1–20–22; 8:45 am]

BILLING CODE 4910–13–P

DEPARTMENT OF TRANSPORTATION

National Highway Traffic Safety Administration

[Docket No. NHTSA–2020–0020; Notice 2]

Hankook Tire America Corporation, Grant of Petition for Decision of Inconsequential Noncompliance

AGENCY: National Highway Traffic Safety Administration (NHTSA), Department of Transportation (DOT).

ACTION: Grant of petition.

SUMMARY: Hankook Tire America Corporation (Hankook) has determined that certain Hankook Dynapro MT2 tires, do not fully comply with Federal Motor Vehicle Safety Standard (FMVSS) No. 139, *New Pneumatic Radial Tires for Light Vehicles.* Hankook filed a noncompliance report dated February 19, 2020, and subsequently petitioned NHTSA on March 11, 2020, for a decision that the subject noncompliance is inconsequential as it relates to motor vehicle safety. This notice announces the grant of Hankook's petition.

FOR FURTHER INFORMATION CONTACT: Jayton Lindley, Office of Vehicle Safety Compliance, the National Highway Traffic Safety Administration (NHTSA), (325) 655–0547, *jayton.lindley@dot.gov.*

SUPPLEMENTARY INFORMATION:

I. Overview

Hankook has determined that certain Hankook Dynapro MT2 tires, do not fully comply with paragraph S5.5(f) of FMVSS No. 139, *New pneumatic radial tires for light vehicles* (49 CFR 571.139).

Hankook filed a noncompliance report dated February 19, 2020, pursuant to 49 CFR part 573, *Defect and Noncompliance Responsibility and Reports,* and subsequently petitioned NHTSA on March 11, 2020, for an exemption from the notification and remedy requirements of 49 U.S.C. Chapter 301 on the basis that this noncompliance is inconsequential as it relates to motor vehicle safety, pursuant to 49 U.S.C. 30118(d) and 30120(h) and 49 CFR part 556, *Exemption for Inconsequential Defect or Noncompliance.*

Notice of receipt of Hankook's petition was published with a 30-day public comment period, on August 28, 2020, in the **Federal Register** (85 FR 53436). One comment was received. To view the petition and all supporting documents log onto the Federal Docket Management System (FDMS) website at *https://www.regulations.gov/.* Then follow the online search instructions to locate docket number ''NHTSA–2020–0020.''

II. Tires Involved

Approximately 175 Hankook Dynapro MT2 tires, size LT215/85R16, manufactured between October 20, 2019, and November 30, 2019, are potentially involved.

III. Noncompliance

Hankook explains that the noncompliance is that the subject tires were marked with the incorrect number of nylon plies in the tread; and, therefore, do not meet the requirements of paragraph S5.5(f) of FMVSS No. 139. Specifically, the tires were marked ''TREAD 2 STEEL + 2 POLYESTER + 1 NYLON; SIDEWALL 2 POLYESTER'', when they should have been marked ''TREAD 2 STEEL + 2 POLYESTER + 2 NYLON; SIDEWALL 2 POLYESTER.''

IV. Rule Requirements

Paragraph S5.5(f) of FMVSS No. 139, includes the requirements relevant to this petition. Each tire must be marked on one sidewall with the actual number of plies in the sidewall and the actual number of plies in the tread area, if different, as specified in paragraph S5.5(f).

V. Summary of Hankook's Petition

The following views and arguments presented in this section, ''V. Summary of Hankook's Petition,'' are the views and arguments provided by Hankook and do not reflect the views of the Agency. In its petition, Hankook describes the subject noncompliance and contends that the noncompliance is inconsequential as it relates to motor vehicle safety.

In support of its petition, Hankook offers the following reasoning:

1. The incorrect ply labeling information does not affect the operational safety of vehicles on which the tires are mounted.

2. The tires meet or exceed the performance requirements of FMVSS No. 139, and they otherwise comply with the labeling and performance requirements of FMVSS No. 139.

3. Hankook is not aware of any warranty claims, field reports, customer complaints, or any incidents, accidents, or injuries related to the subject condition.

4. Hankook cites the Transportation Recall, Enhancement, Accountability and Documentation (TREAD) Act (Pub. L. 106–414) and several of NHTSA's past grant notices of petitions for decisions of inconsequential noncompliance concerning the mislabeling of ply information and contend those are similar to the subject petition. Hankook states that NHTSA has routinely concluded the number of

plies is inconsequential to vehicle safety. Hankook believes the same reasoning applies to the subject tires and that mislabeling the number of nylon plies does not affect the operational safety of the vehicles. Further, Hankook states, the subject tires correctly label the number of steel plies, alleviating the safety concern for the tire retread, repair, and recycling industries.''

Hankook argues that the subject noncompliance is inconsequential as it relates to motor vehicle safety, and that its petition to be exempted from providing notification of the noncompliance, as required by 49 U.S.C. 30118, and a remedy for the noncompliance, as required by 49 U.S.C. 30120, should be granted.

Hankook's complete petition and all supporting documents are available by logging onto the Federal Docket Management System (FDMS) website at: *https://www.regulations.gov* and by following the online search instructions to locate the docket number as listed in the title of this notice.

VI. Public Comment

NHTSA received one comment from the general public regarding Hankook's petition from Mr. Bruce Grim.[1] Mr. Grim stated that although mislabeling a tire sidewall may seem inconsequential, for some in the industry it is still an important aspect of safety for consumers. He suggested that the public is not sufficiently notified at the point of sale of the potential perils or hazards due to the subject noncompliance. Mr. Grim also states that in the event of a recall, it is important that retailers and consumers can identify the subject tires.

VII. NHTSA's Analysis

A. General Principles

An important issue to consider in determining inconsequentiality is the safety risk to individuals who experience the type of event against which the recall would otherwise protect.[2] In general, NHTSA does not consider the absence of complaints or injuries to show that the issue is inconsequential to safety. ''Most importantly, the absence of a complaint does not mean there have not been any safety issues, nor does it mean that there will not be safety issues in the future.'' [3] ''[T]he fact that in past reported cases good luck and swift reaction have prevented many serious injuries does not mean that good luck will continue to work.'' [4]

Arguments that only a small number of vehicles or items of motor vehicle equipment are affected have also not justified granting an inconsequentiality petition.[5] Similarly, NHTSA has rejected petitions based on the assertion that only a small percentage of vehicles or items of equipment are likely to actually exhibit a noncompliance. The percentage of potential occupants that could be adversely affected by a noncompliance does not determine the question of inconsequentiality. Rather, the issue to consider is the consequence to an occupant who is exposed to the consequence of that noncompliance.[6]

B. NHTSA's Response to Hankook's Petition

NHTSA has evaluated the merits of the inconsequential noncompliance petition submitted by the petitioner and agrees that, based on the facts presented, this specific noncompliance of the subject tires is inconsequential to motor vehicle safety. The Agency considered the following prior to making this determination:

1. *Operational Safety & Performance:* NHTSA agrees that in this case, the incorrect number of nylon plies labeled on the tire has no effect on the operational safety of vehicles when the affected tires meet the other performance and labeling requirements of the applicable FMVSS.

2. *Tire Identification and Traceability:* The tires have the required information per 49 CFR 574.5 to ensure that the tires may be properly registered for the purposes of a safety recall. The entire TIN, including the plant code and manufacturing date is both legible and easily discernible.

3. *Downstream Operations:* The Agency must also consider other stakeholders, in addition to the manufacturer and end-user. Downstream entities involved in tire repair, retreading, and recycling operations require certain information to determine if tires may be safely used in their operations. The existence of steel in a tire's sidewall and tread can be relevant to the manner in which it should be repaired or retreaded. The use of steel cord construction in the sidewall and tread is the primary safety concern of these industries. The Agency believes the noncompliance of the subject tires will have no measurable effect on the safety of the tire retread, repair, and recycling industries since the tire sidewalls are marked correctly for the number of steel plies.

4. *Consumer Feedback and Focus Groups:* The Agency has concluded, based on previous feedback, that the tire construction information, specifically the number of plies and cord material in the sidewall and tread plies, influences very few consumers when they are deciding to buy a motor vehicle or replacement tires. This conclusion is based on information gathered from the Advance Notice of Proposed Rulemaking (ANPRM) that was published in the **Federal Register** on December 1, 2000, (65 FR 75222).

5. *Public Comments:* In response to Mr. Grim's comments, the Agency agrees that the safety of the end-users is a priority and has taken that into consideration when analyzing this petition. Furthermore, the Agency agrees that the user's ability to identify a tire in the event of a recall is important and finds nothing in the facts of this petition that would impede tire identification of the subject tires in the event of a recall.

In summary, the Agency believes that the specific incorrect labeling of the tire construction information present in this instance will have an inconsequential effect on motor vehicle safety or any related downstream tire repair, retread, or recycling operations.

[1] *See https://www.regulations.gov/comment/NHTSA-2020-0020-0003.*

[2] *See Gen. Motors, LLC; Grant of Petition for Decision of Inconsequential Noncompliance,* 78 FR 35355 (June 12, 2013) (finding noncompliance had no effect on occupant safety because it had no effect on the proper operation of the occupant classification system and the correct deployment of an air bag); *Osram Sylvania Prods. Inc.; Grant of Petition for Decision of Inconsequential Noncompliance,* 78 FR 46000 (July 30, 2013) (finding occupant using noncompliant light source would not be exposed to significantly greater risk than occupant using similar compliant light source).

[3] *Morgan 3 Wheeler Limited; Denial of Petition for Decision of Inconsequential Noncompliance,* 81 FR 21663, 21666 (Apr. 12, 2016).

[4] *United States* v. *Gen. Motors Corp.,* 565 F.2d 754, 759 (D.C. Cir. 1977) (finding defect poses an unreasonable risk when it ''results in hazards as potentially dangerous as sudden engine fire, and where there is no dispute that at least some such hazards, in this case fires, can definitely be expected to occur in the future'').

[5] *See Mercedes-Benz, U.S.A., L.L.C.; Denial of Application for Decision of Inconsequential Noncompliance,* 66 FR 38342 (July 23, 2001) (rejecting argument that noncompliance was inconsequential because of the small number of vehicles affected); *Aston Martin Lagonda Ltd.; Denial of Petition for Decision of Inconsequential Noncompliance,* 81 FR 41370 (June 24, 2016) (noting that situations involving individuals trapped in motor vehicles—while infrequent—are consequential to safety); *Morgan 3 Wheeler Ltd.; Denial of Petition for Decision of Inconsequential Noncompliance,* 81 FR 21663, 21664 (Apr. 12, 2016) (rejecting argument that petition should be granted because the vehicle was produced in very low numbers and likely to be operated on a limited basis).

[6] *See Gen. Motors Corp.; Ruling on Petition for Determination of Inconsequential Noncompliance,* 69 FR 19897, 19900 (Apr. 14, 2004); *Cosco Inc.; Denial of Application for Decision of Inconsequential Noncompliance,* 64 FR 29408, 29409 (June 1, 1999).

VIII. NHTSA's Decision

In consideration of the foregoing, NHTSA finds that Hankook has met its burden of persuasion that the subject FMVSS No. 139 noncompliance in the affected tires is inconsequential to motor vehicle safety. Accordingly, Hankook's petition is hereby granted and Hankook is consequently exempted from the obligation of providing notification of, and a free remedy for, that noncompliance under 49 U.S.C. 30118 and 30120.

NHTSA notes that the statutory provisions (49 U.S.C. 30118(d) and 30120(h)) that permit manufacturers to file petitions for a determination of inconsequentiality allow NHTSA to exempt manufacturers only from the duties found in sections 30118 and 30120, respectively, to notify owners, purchasers, and dealers of a defect or noncompliance and to remedy the defect or noncompliance. Therefore, this decision only applies to the subject tires that Hankook no longer controlled at the time it determined that the noncompliance existed. However, the granting of this petition does not relieve equipment distributors and dealers of the prohibitions on the sale, offer for sale, or introduction or delivery for introduction into interstate commerce of the noncompliant tires under their control after Hankook notified them that the subject noncompliance existed.

(Authority: 49 U.S.C. 30118, 30120: delegations of authority at 49 CFR 1.95 and 501.8)

Otto G. Matheke, III,

Director, Office of Vehicle Safety Compliance.

[FR Doc. 2022–01133 Filed 1–20–22; 8:45 am]

BILLING CODE 4910–59–P

DEPARTMENT OF TRANSPORTATION

National Highway Traffic Safety Administration

[Docket No. NHTSA–2019–0006; Notice 2]

Volkswagen Group of America, Inc., Grant of Petition for Decision of Inconsequential Noncompliance

AGENCY: National Highway Traffic Safety Administration (NHTSA), Department of Transportation (DOT).

ACTION: Grant of petition.

SUMMARY: Volkswagen Group of America, Inc. (Volkswagen), has determined that certain model year (MY) 2015–2016 Audi A3 and Audi S3 motor vehicles do not comply with Federal Motor Vehicle Safety Standard (FMVSS) No. 108, *Lamps, Reflective Devices, and Associated Equipment.* Volkswagen filed a noncompliance report dated January 28, 2019, and a petition was received by NHTSA on January 28, 2019, for a decision that the subject noncompliance is inconsequential as it relates to motor vehicle safety. This document announces the grant of Volkswagen's petition.

FOR FURTHER INFORMATION CONTACT: Leroy Angeles, Office of Vehicle Safety Compliance, the National Highway Traffic Safety Administration (NHTSA), (202) 366–5304, *Leroy.Angeles@dot.gov.*

SUPPLEMENTARY INFORMATION:

I. Overview: Volkswagen has determined that certain MY 2015–2016 Audi A3 Sedan, S3 Sedan, and A3 Cabriolet motor vehicles do not comply with paragraph S9.3.6. of FMVSS No. 108, *Lamps, Reflective Devices, and Associated Equipment* (49 CFR 571.108). Volkswagen filed a noncompliance report dated January 28, 2019, pursuant to 49 CFR 573, *Defect and Noncompliance Responsibility and Reports,* and a petition received by NHTSA on January 28, 2019, for an exemption from the notification and remedy requirements of 49 U.S.C. Chapter 301 on the basis that this noncompliance is inconsequential as it relates to motor vehicle safety, pursuant to 40 U.S.C. 30118 and 49 U.S.C. 30120, *Exemption for Inconsequential Defect or Noncompliance.*

Notice of receipt of Volkswagen's petition was published with a 30-day public comment period, on July 9, 2019, in the **Federal Register** (84 FR 32830). One comment was received. To view the petition and all supporting documents log onto the Federal Docket Management System (FDMS) website at *https://www.regulations.gov/.* Then follow the online search instructions to locate docket number ''NHTSA–2019–0006.''

II. Vehicles Involved: Approximately 81,831 MY 2015–2016 Audi A3, S3 Sedan, and A3 Cabriolet motor vehicles, manufactured between November 28, 2013, and July 28, 2016, are potentially involved.

III. Noncompliance: Volkswagen explains that the noncompliance is that the subject vehicles are equipped with turn signal pilot indicators that do not meet the flashing rate as required by paragraph S9.3.6 of FMVSS No. 108. Specifically, the left turn signal indicator does not have a significant change in the flashing rate when the left rear turn signal LED array becomes inoperative.

IV. Rule Requirements: Paragraph S9.3.6 of FMVSS No. 108 provides the requirements relevant to this petition. Failure of one or more turn signal lamps, such that the minimum photometric performance specified in Tables VI or VII of FMVSS No. 108 is not being met, must be indicated by the turn signal pilot indicator by a ''steady on,'' ''steady off,'' or by a significant change in the flashing rate.

V. Summary of Volkswagen's Petition: Volkswagen describes the subject noncompliance and contends that the noncompliance is inconsequential as it relates to motor vehicle safety. The following views and arguments presented in this section, ''V. Summary of Volkswagen's Petition,'' are the views and arguments provided by Volkswagen and do not reflect the views of the Agency.

In support of its petition, Volkswagen offers the following reasoning:

(a) The driver receives two different indicator warnings that the rear brake light is inoperative in the instrument cluster immediately upon failure of the turn signal lamp to comply with the photometry requirements of FMVSS No. 108. This happens because the brake light and indicator light/turn signal are combined.

(b) The subject condition, the lack of a turn signal pilot indicator flash rate change, is limited to the condition in which the outermost left rear turn signal lamp fails.

(c) In the case of LED array failure, both the brake light and indicator light/turn signal become inoperative. Should the required left turn signal become inoperative, Volkswagen confirmed that other auxiliary left turn signal lights located on the trunk and the left side mirror are still operational. Additionally, the back-up lamp in the left rear tail lamp assembly, the left brake light in the trunk lid assembly, and the center high mount stop lamp, will remain operational.

Volkswagen concludes that the subject noncompliance is inconsequential as it relates to motor vehicle safety, and that its petition to be exempted from providing notification of the noncompliance, as required by 49 U.S.C. 30118, and a remedy for the noncompliance, as required by 49 U.S.C. 30120, should be granted.

VI. Public Comments: NHTSA received one comment from the public. This comment was received from an individual who believed that Volkswagen's reasoning is unclear as it stands, and that NHTSA should request more information from Volkswagen or deem the noncompliance consequential. The commenter said that it is unclear as to whether the ''two different indicator warnings in the instrument cluster'' are compliant and that a redundancy should not be considered an appropriate substitute for a well-functioning, compliant failure indicator that's required by the FMVSS. The commenter also said that the rule requirements are

fairly clear with the possible exception of the lack of specificity of the word ''significant'' in the phrase ''significant change in the flashing rate'' but that lack of specificity isn't addressed by Volkswagen's petition. The commenter also questioned the reasoning in paragraph 2 of the petition that the warning that ''both lights'' had become inoperative was equivalent to the specific warnings required by the Standard.

VII. NHTSA's Analysis: The burden of establishing the inconsequentiality of a failure to comply with a *performance requirement* in a standard—as opposed to a *labeling requirement*—is more substantial and difficult to meet. Accordingly, the Agency has not found many such noncompliances inconsequential.[1] Potential performance failures of equipment like seat belts or air bags are rarely deemed inconsequential.

An important issue to consider in determining inconsequentiality based upon NHTSA's prior decisions on noncompliance issues was the safety risk to individuals who experience the type of event against which the recall would otherwise protect.[2] NHTSA also does not consider the absence of complaints or injuries to show that the issue is inconsequential to safety. ''Most importantly, the absence of a complaint does not mean there have not been any safety issues, nor does it mean that there will not be safety issues in the future.'' [3] ''[T]he fact that in past reported cases good luck and swift reaction have prevented many serious injuries does not mean that good luck will continue to work.'' [4]

NHTSA has reviewed and evaluated the merits of the inconsequential noncompliance petition submitted by Volkswagen.

For this petition, NHTSA first considered the subject lamp configuration which consists of four light assemblies on the rear of the subject vehicles. Two outboard assemblies are mounted to the rear quarter panels and two inboard assemblies are mounted on the trunk lid. These pairs of assemblies, one on each side of the vehicle, are mounted adjacent to each other. When a turn signal is activated by the driver, the turn lamps in both the outboard and inboard assemblies on the side of the vehicle corresponding to the direction the driver selected, will illuminate. Volkswagen explained that that the auxiliary inboard lamps will remain operational should the outboard lamps become inoperative. The Agency did not find these factors to be compelling in granting this petition.

Instead, the Agency found the following considerations to be most relevant to its decision:

(a) While the turn signal pilot indicator does not change in flash rate when the left outboard turn signal lamp fails to meet the photometric requirements, the subject vehicles provide the drivers an alternative method of notification. According to Volkswagen's petition, the noncompliance in the subject vehicles is limited to when the left rear outboard turn signal lamp fails, and if the left inboard turn signal lamp should fail, the turn signal pilot indicator will function. Given these conditions, the noncompliance creates a scenario where a failure in the left outboard turn signal lamp will not activate the ''fast flash'' in the pilot indicator. While the driver is not alerted to a failure of the required turn signal lamp by means of a change in the flash rate of the turn signal pilot indicator lamp, if both the required turn signal lamp and the auxiliary turn signal lamp fails, the driver will be alerted by the means specified in the standard. In the event this inboard turn signal lamp should fail, the turn signal pilot indicator will alert the driver.

(b) In addition, Volkswagen has provided at least two other warning lights that illuminate to make the driver aware of the failure. A warning light will illuminate at vehicle start-up or when the failure occurs while driving. There will also be a constant bulb out indicator in the central information display while the turn signal lamp is inoperative. Additionally, if the left outboard turn signal lamp is out, all other required lamps still operate as designed.

In response to the public comment stating that ''a redundancy should not be considered an appropriate substitute for a well-functioning, compliant failure indicator that's required by the FMVSS,'' NHTSA agrees that an alternative method of notification is not a substitute for complying with a FMVSS. However, NHTSA has recently granted other petitions such as those submitted by Mack Trucks Inc. and Volvo Trucks North America where an alternative method of notification was a factor considered in granting the petition.[5] While manufacturers are not permitted to knowingly certify a vehicle that does not comply with the FMVSS, NHTSA can consider whether such an alternative method of performance is a mitigating factor when determining the effect of the noncompliance on safety.

In the case of the subject petition, failure of the left rear outboard turn signal will result in the illumination of a steady burning general warning telltale, while a failure of the left rear inboard turn signal will produce a compliant ''fast flash'' warning. Thus, some form of notification will always result from a failure and an FMVSS No. 108-compliant warning will occur if both rear left turn signal lamps fail. Based on the specifics of this case, NHTSA believes this alternative warning provides adequate notice to drivers that the left rear turn signal lamp has failed such that this noncompliance is inconsequential to motor vehicle safety.

VIII. NHTSA's Decision: In consideration of the foregoing, NHTSA finds that Volkswagen has met its burden of persuasion that the FMVSS No. 108 noncompliance is inconsequential as it relates to motor vehicle safety. Accordingly, Volkswagen's petition is hereby granted and they are exempted from the obligation to provide notification of and remedy for the subject noncompliance in the affected vehicles under 49 U.S.C. 30118 and 30120.

NHTSA notes that the statutory provisions (49 U.S.C. 30118(d) and 30120(h)) that permit manufacturers to file petitions for a determination of inconsequentiality allow NHTSA to exempt manufacturers only from the duties found in sections 30118 and 30120, respectively, to notify owners, purchasers, and dealers of a defect or noncompliance and to remedy the defect or noncompliance. Therefore, this decision only applies to the subject vehicles that Volkswagen no longer controlled at the time it determined that the noncompliance existed. However, the granting of this petition does not relieve vehicle distributors and dealers of the prohibitions on the sale, offer for

[1] *Cf. Gen. Motors Corporation; Ruling on Petition for Determination of Inconsequential Noncompliance,* 69 FR 19897, 19899 (Apr. 14, 2004) (citing prior cases where noncompliance was expected to be imperceptible, or nearly so, to vehicle occupants or approaching drivers).

[2] *See Gen. Motors, LLC; Grant of Petition for Decision of Inconsequential Noncompliance,* 78 FR 35355 (June 12, 2013) (finding noncompliance had no effect on occupant safety because it had no effect on the proper operation of the occupant classification system and the correct deployment of an air bag); *Osram Sylvania Prods. Inc.; Grant of Petition for Decision of Inconsequential Noncompliance,* 78 FR 46000 (July 30, 2013) (finding occupant using noncompliant light source would not be exposed to significantly greater risk than occupant using similar compliant light source).

[3] *Morgan 3 Wheeler Limited; Denial of Petition for Decision of Inconsequential Noncompliance,* 81 FR 21663, 21666 (Apr. 12, 2016).

[4] *United States* v. *Gen. Motors Corp.,* 565 F.2d 754, 759 (D.C. Cir. 1977) (finding defect poses an unreasonable risk when it ''results in hazards as potentially dangerous as sudden engine fire, and where there is no dispute that at least some such hazards, in this case fires, can definitely be expected to occur in the future'').

[5] *See Mack Trucks, Inc., and Volvo Trucks North America, Grant of Petitions for Decision of Inconsequential Noncompliance,* 84 FR 67766, December 11, 2019.

sale, or introduction or delivery for introduction into interstate commerce of the noncompliant vehicles under their control after Volkswagen notified them that the subject noncompliance existed.

(Authority: 49 U.S.C. 30118, 30120: delegations of authority at 49 CFR 1.95 and 501.8)

Otto G. Matheke, III,

Director, Office of Vehicle Safety Compliance.

[FR Doc. 2022–01128 Filed 1–20–22; 8:45 am]

BILLING CODE 4910–59–P

DEPARTMENT OF TRANSPORTATION

National Highway Traffic Safety Administration

[Docket No. NHTSA–2019–0071; Notice 2]

Toyota Motor North America, Inc., Grant of Petition for Decision of Inconsequential Noncompliance

AGENCY: National Highway Traffic Safety Administration (NHTSA), Department of Transportation (DOT).

ACTION: Grant of petition.

SUMMARY: Toyota Motor North America, Inc. (Toyota) has determined that certain Model Year (MY) 2013–2019 Toyota RAV4 and MY 2014–2019 Toyota Highlander/Highlander HV motor vehicles do not fully comply with S4 of Federal Motor Vehicle Safety Standard (FMVSS) No. 302, *Flammability of Interior Materials.* Toyota filed a noncompliance report dated June 19, 2019, and subsequently petitioned NHTSA on July 12, 2019, and later amended that petition on August 13, 2019, for a decision that the subject noncompliance is inconsequential as it relates to motor vehicle safety. This notice announces the grant of Toyota's petition.

FOR FURTHER INFORMATION CONTACT: Kelley Adams-Campos, Safety Compliance Engineer, Office of Vehicle Safety Compliance, NHTSA, 202–366–7479, *kelley.adamscampos@dot.gov.*

SUPPLEMENTARY INFORMATION:

I. Overview

Toyota has determined that certain MY 2013–2019 Toyota RAV4 and certain Toyota Highlander/Highlander HV motor vehicles do not fully comply with paragraph S4 of FMVSS No. 302, *Flammability of Interior Materials.* Toyota filed a noncompliance report dated June 19, 2019, pursuant to 49 CFR part 573, *Defect and Noncompliance Responsibility and Reports,* and subsequently petitioned NHTSA on July 12, 2019, and later amended its petition on August 13, 2019, for an exemption from the notification and remedy requirement of 49 U.S.C. Chapter 301 on the basis that this noncompliance is inconsequential as it relates to motor vehicle safety. *See* 49 U.S.C. 30118(d) and 30120(h), and 49 CFR part 556, *Exemption for Inconsequential Defect or Noncompliance.*

Notice of receipt of Toyota's petition was published with a 30-day public comment period, on December 3, 2019, in the **Federal Register** (84 FR 66276). No comments were received. To view the petition and all supporting documents log onto the Federal Docket Management System (FDMS) website at *https://www.regulations.gov/.* Then follow the online search instructions to locate docket number ''NHTSA–2019–0071.''

II. Vehicles Involved

Approximately 2,144,217 MY 2013–2019 Toyota RAV4 and MY 2014–2019 Toyota Highlander/Highlander HV motor vehicles manufactured between December 21, 2012, and March 28, 2019, are potentially involved.

III. Noncompliance

Toyota explains that the noncompliance relates to certain hook and loop fasteners that attach the floor carpet to the underlying padding. The loop side of the fastener is made from material that may not comply, as required, with paragraph S4.1 of FMVSS No. 302. Specifically, when tested separately from the floor carpet, the loop side of the fastener in the subject vehicles does not meet the burn rate requirements of paragraph S4.3.

IV. Rule Requirements

Paragraphs S4.1 through S4.3(b) of FMVSS No. 302 include the requirements relevant to this petition:

S4.1 The portions described in S4.2 of the following components of vehicle occupant compartments shall meet the requirements of S4.3: Seat cushions, seat backs, seat belts, headlining, convertible tops, armrests, all trim panels including door, front, rear, and side panels, compartment shelves, head restraints, floor coverings, sun visors, curtains, shades, wheel housing covers, engine compartment covers, mattress covers, and any other interior materials, including padding and crash-deployed elements, that are designed to absorb energy on contact by occupants in the event of a crash.

S4.2.1 Any material that does not adhere to other material(s) at every point of contact shall meet the requirements of S4.3.

Paragraph S4.3(a) of FMVSS No. 302 requires that material described in S4.1 and S4.2 shall not burn, nor transmit a flame front across its surface, at a rate of more than 102 mm per minute. The requirement concerning the transmission of a flame front shall not apply to a surface created by cutting a test specimen for purposes of testing pursuant to S5.

V. Summary of Toyota's Petition

The following views and arguments presented in this section (V. Summary of Toyota's Petition), are the views and arguments provided by Toyota.

Toyota described the subject noncompliance and stated its belief that the noncompliance is inconsequential as it relates to motor vehicle safety. In support of its petition, Toyota submitted the following:

1. During pre-production evaluations of the new model Highlander (MY 2020) the supplier found that the loop fasteners might not meet the burn rate requirement of FMVSS No. 302. These same fasteners are used on the subject vehicles; they are attached to the underside of the carpet near the front footwell. Toyota conducted testing of the loop side of the fastener, in accordance with FMVSS No. 302; when tested separately from the carpet, the burn rate of the loop side of the fastener was 133 mm/min (worst of ten tests). The loop fastener material did not have flame-retardant coating, and therefore the burn rate requirement specified on the drawing was not met.

2. The loop fastener material complies with FMVSS No. 302 when tested as a ''composite'' as installed to the FMVSS No. 302 compliant carpet assembly.

3. The purpose of FMVSS No. 302 is to ''reduce the deaths and injuries to motor vehicle occupants caused by vehicle fires, especially those originating in the interior of the vehicle from sources such as matches or cigarettes.'' The noncomplying loop fastener material would normally not be exposed to open flame or an ignition source (like matches or cigarettes) in its installed application, because it is installed beneath and completely covered by the carpet material which complies with FMVSS No. 302.

4. The loop fastener material is a very small portion of the overall mass of the soft material portions comprising the carpet assembly (*i.e.,* 0.037% or less), and is significantly less in relation to the entire vehicle interior surface area that could potentially be exposed to flame. Therefore, it would have an insignificant adverse effect on the interior material burn rate and the potential for occupant injury due to interior fire.

5. Toyota is not aware of any data suggesting that fires have occurred in the field from installation of the noncomplying loop fastener material.

• Toyota says NHTSA has previously granted at least ten FMVSS No. 302 petitions for inconsequential noncompliance—one of which was for a vehicle's seat heater assemblies, one of which was for a vehicle's console armrest, one of which was for large truck sleeper bedding, one of which was for seating material, and six of which were for issues related to child restraints systems (CRS). These are:

• Paccar (57 FR 45868, October 5, 1992)—Noncompliant tape edging surrounding otherwise compliant bedding materials in a large truck sleeper bed was deemed by the Agency to be inconsequential given its low relative volume to the otherwise complying surrounding material, as well as the fact the tape edging passed bedding industry fire standards. Unlike the Toyota loop fastener material in the subject vehicles, which is not exposed directly to the occupant compartment air space, the tape edging of the sleeper bed was exposed. Nonetheless, the Agency granted the petition on the basis that the noncompliant material was surrounded by compliant material and was of a low relative volume compared to the compliant material.

• Fisher-Price (60 FR 41152, August 11, 1995)—Noncompliant fabric used in CRS shoulder straps was deemed to be inconsequential by the Agency, due to factors which included that the margin of noncompliance was small; the shoulder straps that do not comply are a small part of the CRS itself and a minimal part of the fabric present in a vehicle's interior; the absence of reports in which the noncompliance exists supported the Agency's decision that the noncompliance is inconsequential. Toyota stated that the Toyota loop fastener material is also a small part of the vehicle carpet and a minimal part of the materials in the interior of the subject vehicles.

• Century (60 FR 41148, August 11, 1995)—Noncompliant seat covers were determined unlikely to pose a flammability risk when securely sewn to the seat (*i.e.,* the ''normal condition''), based on some flammability testing of the material as a composite. Unlike the Toyota loop fastener material in the subject vehicles, which is not exposed directly to the occupant compartment air space in the ''normal condition,'' the CRS covers were exposed. Similarly, the Toyota subject loop material also passes the FMVSS No. 302 requirements when tested as a ''composite.'' The Agency also noted that (as is the case with the subject Toyota loop material) ''the absence of fires originating in these child restraints supported the Agency's decision that the noncompliance does not have a consequential effect on safety.''

• Cosco—(60 FR 41150, August 11, 1995)—Noncompliant fabric used in CRS shoulder straps was deemed to be inconsequential by the Agency due to the similarity to the Fisher-Price request for inconsequentiality and the reasons set out in the notice granting Fisher Price's appeal (see above). FMVSS No. 302 does not in itself apply to child restraint systems, but paragraph S4 of FMVSS No. 302 is invoked by reference in FMVSS No. 213; therefore, the child restraint petitions are relevant precedents.

• Kolcraft (63 FR 24585, May 4, 1998)—One or more of the fitting, face, or backing materials of CRS seat covers were noncompliant. NHTSA determined the noncompliance to be inconsequential because when tested as a composite (*i.e.,* in the ''normal condition''), the covers met FMVSS No. 302 requirements. Similarly, the Toyota subject loop fastener material passes the FMVSS No. 302 requirements when tested as a ''composite.''

• Cosco (63 FR 30809, June 5, 1998)—NHTSA found that the noncomplying fiberfill incorporated into a pillow located in a child restraint was inconsequential to safety due to the unlikelihood of exposure to an ignition source for various reasons: That the noncompliant material was encased in materials which complied with FMVSS No. 302, and that the fiberfill was only a limited quantity of noncompliant material used in the CRS. Similarly, the subject Toyota loop fastener material also passes the FMVSS No. 302 requirements when tested as a composite, is unlikely to be exposed to a direct ignition source, is surrounded by materials which comply with FMVSS No. 302, and is only a limited quantity of noncompliant material in the carpet assembly. The Agency also noted that (as is the case with the subject Toyota loop material) ''the absence of fires originating in these child restraints supported the Agency's decision that the noncompliance does not have a consequential effect on safety.''

• Ford (63 FR 40780, July 30, 1998)—A noncompliant center console armrest ''plus pad'' was determined by the Agency to be inconsequential to safety in that, because of its location under an exterior cover, it was unlikely to pose a flammability risk due to the unlikelihood of its exposure to an ignition source. The Agency was unaware of any occupant injuries in vehicle post-crash fires that were caused by burning of the console armrests in those vehicles. Toyota argued that Ford undertook ''composite'' testing like Toyota's described above to support its petition.

• Graco (77 FR 14055, March 8, 2012)—Certain noncompliant warning labels attached to the outside of detachable accessory pillows were deemed inconsequential by the Agency due to the relatively small size of the label, together with its proximity to other materials on the CRS that were treated with flame retardant materials, rendering the likelihood of ignition of the label extremely low. The subject Toyota loop fastener material is surrounded by compliant materials, is not exposed to the occupant compartment air space, and is a small part of the vehicle carpet assembly and a minimal part of the otherwise compliant materials in the interior of the subject vehicles.

• Toyota (80 FR 4035, January 26, 2015)—Certain noncompliant front and rear seat back and seat cushion seat heaters were determined by the Agency to be inconsequential to safety in that the seat heaters were unlikely to pose a flammability risk. The Agency was unaware of any occupant injuries regarding these seat heaters in the subject vehicles. The seat heaters would not accommodate a flame rate beyond what is permitted by FMVSS No. 302 when exposed directly to an open flame in the installed condition (as a composite). It was also demonstrated that the seat heater was a very small portion of the overall mass of the seat assembly. According to Toyota, the facts here are similar. The subject loop fastener material is unlikely to be exposed to an ignition source in the installed condition, it does not accommodate a flame beyond what is permitted by FMVSS No. 302 when exposed directly to an open flame in the installed condition (as a composite), the loop material is only a very small portion of the overall mass of the carpet assembly, and there are no known field ignition events.

• Toyota (83 FR 16433, April 16, 2018)—Certain noncompliant needle punch felt material used in the front and rear seat covers and rear center armrest assemblies was determined by the Agency to be inconsequential to safety. The Agency stated that: (1) The needle punch felt material is covered by other materials that do comply with FMVSS No. 302, thus, the needle punch felt material is protected from the occupant compartment where it could directly come into contact with an ignition source such as a match or cigarette; (2) when the needle punch felt material is tested as a composite with the FMVSS No. 302 compliant materials (*i.e.,* seat cover, cover pad, foam pad, seat heater, carpet, and storage bin) that cover the punch felt material, the requirements for burn rate are met accordingly; and (3) the noncompliant material is approximately 0.32 percent of the total mass of the soft material of the front seat assembly and between 0.48 percent and 0.55 percent (less than 1 percent) of the total mass of the soft material of the rear seat assembly. Therefore, the noncompliant material represents an insignificant quantity of material compared to the total quantity of interior vehicle material. The loop fasteners in the subject vehicles share these same characteristics.

Toyota concluded that the subject noncompliance is inconsequential as it relates to motor vehicle safety and that its petition to be exempted from providing notification of the noncompliance, as required by 49 U.S.C. 30118, and a remedy for the noncompliance, as required by 49 U.S.C. 30120, should be granted.

VI. NHTSA's Analysis

NHTSA has reviewed Toyota's evaluation that the subject noncompliance is inconsequential to motor vehicle safety. The burden of establishing the inconsequentiality of a failure to comply with a performance requirement in a standard—as opposed to a labeling requirement—is more substantial and difficult to meet. Accordingly, the Agency has not found many such noncompliances inconsequential.[1] Potential performance failures of safety-critical equipment, like seat belts or air bags, are rarely deemed inconsequential.

An important issue to consider in determining inconsequentiality based

[1] *Cf. Gen. Motors Corporation; Ruling on Petition for Determination of Inconsequential Noncompliance,* 69 FR 19897, 19899 (Apr. 14, 2004) (citing prior cases where noncompliance was expected to be imperceptible, or nearly so, to vehicle occupants or approaching drivers).

upon NHTSA's prior decisions on noncompliance issues is the safety risk to individuals who experience the type of event against which the recall would otherwise protect.[2] NHTSA also does not consider the absence of complaints or injuries to show that the issue is inconsequential to safety. ''Most importantly, the absence of a complaint does not mean there have not been any safety issues, nor does it mean that there will not be safety issues in the future.''[3] ''[T]he fact that in past reported cases good luck and swift reaction have prevented many serious injuries does not mean that good luck will continue to work.''[4]

NHTSA considered the following factors in evaluating this petition:

First, according to the data provided by Toyota, the noncompliant material has a mass that is insignificant when compared to the overall mass of the carpet assembly. The petitioner stated that the mass of the loop fastener constitutes approximately 0.037 percent or less of the soft material portions of the carpet assembly. However, while Toyota argues that the noncompliant material would not significantly fuel a fire, should it become exposed, the relative measure, *i.e.,* percentage, of a material characteristic, *i.e.,* mass, surface area, thickness, etc. without consideration of other factors, *e.g.* the surrounding of the noncompliant material with complying materials, does not alone mean such a material would not significantly fuel a fire upon exposure to an ignition source.

Second, the loop fastener material in the subject vehicles is covered by the carpet material which complies with FMVSS No. 302, thus, the loop fastener material is protected from contact with an ignition source originating from the occupant space.

Third, the data submitted by Toyota shows that, when tested as a single unit, the loop fasteners along with the carpet comply with FMVSS No. 302.

Toyota also stated that NHTSA has granted previous petitions whose facts align with those at issue in the instant case. These include a Paccar petition (57 FR 45868, October 5, 1992), a Fischer Price (60 FR 41152, August 11, 1995) petition, a Century petition, (60 FR 41148, August 11, 1995), Kolcraft (63 FR 24585, May 4, 1998), Cosco petition (60 FR 41150, August 11, 1995) and a Toyota petition (80 FR 4035, January 26, 2015) where the non-compliant material represented a small percentage of the interior fabric. As NHTSA states previously in this section, the relative measure, *i.e.,* percentage, of a material characteristic, *i.e.,* mass, surface area, thickness, etc. without consideration of other factors does not alone mean such a material would not significantly fuel a fire upon exposure to an ignition source. Toyota also offered a past grant where a combination of compliant and non-compliant fabric met FMVSS No. 302 when tested as a single unit. (Kolcraft (63 FR 24585, May 4, 1998)). Finally, Toyota cited several grants where NHTSA determined that noncompliant fabric located where it would not encounter an ignition source was inconsequential to safety. These include two Cosco petitions, (63 FR 30809, (June 5, 1998) and 60 FR 41150 (August 11, 1995), two Toyota petitions (83 FR 16433, (April 16, 2018) and (80 FR 4035, January 26, 2015)) and a Ford petition (63 FR 40780, (July 30, 1998)). As noted above, NHTSA evaluates each petition on its individual facts and does not consider itself to be bound by these earlier grants. Nonetheless, NHTSA has evaluated the subject petition and has made a determination in a similar fashion.

VII. NHTSA's Decision

NHTSA finds that Toyota has met its burden of persuasion of demonstrating that the noncompliant small loop fasteners sewn into the carpet at issue in this case do not present a risk to safety. The noncompliant fabric present here must be separated from the carpet to be deemed noncompliant as the carpet and loop patch together meet the standard. The loop fasteners also constitute a small percentage of the fabric area and are located where they are not likely to encounter an ignition source. Accordingly, Toyota's petition is hereby granted. Toyota is consequently exempted from the obligation of providing notification of, and a free remedy for, the noncompliance under 49 U.S.C. 30118 and 30120.

NHTSA notes that the statutory provisions (49 U.S.C. 30118(d) and 30120(h)) that permit manufacturers to file petitions for a determination of inconsequentiality allow NHTSA to exempt manufacturers only from the duties found in sections 30118 and 30120, respectively, to notify owners, purchasers, and dealers of a defect or noncompliance and to remedy the defect or noncompliance. Therefore, this decision only applies to the subject vehicles that Toyota no longer controlled at the time it determined that the noncompliance existed. However, the granting of this petition does not relieve vehicle distributors and dealers of the prohibitions on the sale, offer for sale, or introduction or delivery for introduction into interstate commerce of the noncompliant vehicles under their control after Toyota notified them that the subject noncompliance existed.

(Authority: 49 U.S.C. 30118, 30120: delegations of authority at 49 CFR 1.95 and 501.8)

Otto G. Matheke, III,

Director, Office of Vehicle Safety Compliance.

[FR Doc. 2022–01132 Filed 1–20–22; 8:45 am]

BILLING CODE 4910–59–P

[2] *See Gen. Motors, LLC; Grant of Petition for Decision of Inconsequential Noncompliance,* 78 FR 35355 (June 12, 2013) (finding noncompliance had no effect on occupant safety because it had no effect on the proper operation of the occupant classification system and the correct deployment of an air bag); *Osram Sylvania Prods. Inc.; Grant of Petition for Decision of Inconsequential Noncompliance,* 78 FR 46000 (July 30, 2013) (finding occupant using noncompliant light source would not be exposed to significantly greater risk than occupant using similar compliant light source).

[3] *Morgan 3 Wheeler Limited; Denial of Petition for Decision of Inconsequential Noncompliance,* 81 FR 21663, 21666 (Apr. 12, 2016).

[4] *United States* v. *Gen. Motors Corp.,* 565 F.2d 754, 759 (D.C. Cir. 1977) (finding defect poses an unreasonable risk when it ''results in hazards as potentially dangerous as sudden engine fire, and where there is no dispute that at least some such hazards, in this case fires, can definitely be expected to occur in the future'').

DEPARTMENT OF THE TREASURY

Agency Information Collection Activities; Proposed Collection; Comment Request; Equal Employment Opportunity Complaint Forms

AGENCY: Departmental Offices, U.S. Department of the Treasury.

ACTION: Notice.

SUMMARY: The Department of the Treasury, as part of its continuing effort to reduce paperwork and respondent burden, invites the general public and other federal agencies to comment on the proposed information collections listed below, in accordance with the Paperwork Reduction Act of 1995.

DATES: Written comments must be received on or before March 22, 2022.

ADDRESSES: Send comments regarding the burden estimate, or any other aspect of the information collection, including suggestions for reducing the burden, by the following method:

- *Federal E-rulemaking Portal: http://www.regulations.gov.* Follow the instructions for submitting comments. Refer to Docket Number TREAS–DO–2022–0003 and the specific Office of Management and Budget (OMB) control number 1505–0262.

FOR FURTHER INFORMATION CONTACT: For questions related to these programs, please contact Guizelous Molock by emailing *pra@treasury.gov,* or calling (202) 923–0498. Additionally, you can view the information collection requests at *www.reginfo.gov.*

SUPPLEMENTARY INFORMATION:

Title: Equal Employment Opportunity Compliant Forms.

OMB Control Number: 1505–0262.

Type of Review: Extension of a currently approved collection.

Description: Title 29 of the United States Code of Federal Regulations (CFR) part 1614, directs agencies to maintain a continuing program to promote equal opportunity and to identify and eliminate discriminatory practices and policies. The Department of the Treasury (Department) is thus required to process complaints of employment discrimination from Department employees, former employees and applicants for jobs with the Department who claim discrimination based on their membership in a protected class, such as, race, color, religion, sex (including pregnancy, sexual orientation and gender identity), national origin, age (over 40), disability, genetic information, or retaliation for engaging in prior protected activity. Claims of discrimination based on parental status are processed as established by Executive Order 11478 (as amended by Executive Order 13152). Federal agencies must offer pre-complaint ''informal'' counseling and/or Alternative Dispute Resolution (ADR) to these ''aggrieved individuals'' (the aggrieved), claiming discrimination by officials of the Department. If the complaint is not resolved during the informal process, agencies must issue a Notice of Right to File a Complaint of Discrimination form to the aggrieved. This information is being collected for the purpose of processing informal and formal complaints of employment discrimination against the Department on the bases of race, color, religion, sex (including pregnancy, sexual orientation and gender identity), national origin, age (over 40), disability, genetic information, parental status, or retaliation. Pursuant to 29 CFR 1614.105, the aggrieved must participate in pre-complaint counseling to try to informally resolve his/her complaint prior to filing a complaint of discrimination. Information provided on the pre-complaint forms may be used by the aggrieved to assist in determining if she or he would like to file a formal complaint against the Department. The information captured on these forms will be reviewed by the staff of the Department's Office of Civil Rights and Diversity to frame the claims for investigation and determine whether the claims are within the parameters established in 29 CFR part 1614. In addition, data from the complaint forms is collected and aggregated for the purpose of discerning whether any Department of the Treasury policies, practices or procedures may be curtailing the equal employment opportunities of any protected group.

Forms: TD F 62–03.1, TD F 62–03.2, TD F 62–03.4, TD F 62–03.6, TD 62–03.7, TD 62–03.8, TD F 62–03.9, TD F 62–03.10, TD F 62–03.11, TD F 63–03.5.

Affected Public: Individuals and Households.

Estimated Number of Respondents: 1 to 20 respondents.

Frequency of Response: On Occasion.

Estimated Total Number of Annual Responses: 90.

Estimated Time per Response: 3 minutes to 1 hour.

Estimated Total Annual Burden Hours: 47.

Request for Comments: Comments submitted in response to this notice will be summarized and included in the request for Office of Management and Budget approval. All comments will become a matter of public record. Comments are invited on: (a) Whether the collection of information is necessary for the proper performance of the functions of the agency, including whether the information shall have practical utility; (b) the accuracy of the agency's estimate of the burden of the collection of information; (c) ways to enhance the quality, utility, and clarity of the information to be collected; (d) ways to minimize the burden of the collection of information on respondents, including through the use of technology; and (e) estimates of capital or start-up costs and costs of operation, maintenance, and purchase of services required to provide information.

Authority: 44 U.S.C. 3501 *et seq.*

Dated: January 14, 2022.

Molly Stasko,

Treasury PRA Clearance Officer.

[FR Doc. 2022–01110 Filed 1–20–22; 8:45 am]

BILLING CODE 4810–AK–P

DEPARTMENT OF THE TREASURY

Federal Financial Assistance Infrastructure Programs Subject to the Build America, Buy America Provisions of the Infrastructure Investment and Jobs Act

AGENCY: Department of the Treasury.

ACTION: Notice.

SUMMARY: Pursuant to section 70913 of the Infrastructure Investment and Jobs Act, the Department of the Treasury has prepared the report provided below regarding its financial assistance programs that provide funding that may be used by recipients for infrastructure projects.

FOR FURTHER INFORMATION CONTACT:

For further information about the programs administered by the Office of Recovery Programs, contact Brette Fishman, Director, Office of Grant Policy, Office of Recovery Programs, at *OfficeOfRecoveryPrograms@treasury.gov* or (844) 529–9527.

For further information about the RESTORE Act, Direct Component program administered by the Office of Gulf Coast Restoration, contact Maureen Klovers, Program Director, Office of Gulf Coast Restoration at *maureen.klovers2@treasury.gov* or (844) 529–9527.

SUPPLEMENTARY INFORMATION:

Treasury's Identification of Federal Financial Assistance Infrastructure Programs Subject to the Build America, Buy America Provisions of the Infrastructure Investment and Jobs Act

1. Introduction

On November 15, 2021, President Biden signed into law the Infrastructure Investment and Jobs Act (IIJA), which includes the ''Build America, Buy America Act'' (the Act). This Act ensures that Federal infrastructure programs require the use of materials produced in the United States, increases the requirement for American-made content, and strengthens the waiver process associated with Buy America provisions.

The Act requires that within 60 days of its enactment, January 14, 2022, each agency must submit to the Office of Management and Budget (OMB) and Congress and publish in the **Federal Register** a report (''60-day report'') listing all Federal financial assistance programs for infrastructure administered by the agency. In these 60-day reports, agencies are required to identify and provide a list of which of these programs are ''deficient,'' as defined in the Act.

In an effort to aid agencies towards compliance with Sections 70913 (Identification of Deficient Programs) and 70914 (Application of Buy America Preference) of the IIJA, OMB issued memorandum M–22–08, ''*Identification of Federal Financial Assistance Infrastructure Programs Subject to the Build America, Buy America Provisions of the Infrastructure Investment and Jobs Act*'' on December 20, 2021. This memorandum provides criteria that assist agencies in identifying which programs constitute infrastructure programs and helps them determine if any of these programs are considered deficient as described in section 70913(c) of the IIJA.

OMB memorandum M–22–08 also informs agencies regarding items that are required to be contained in the 60-

day report for each infrastructure program, which includes identifying all domestic content procurement preferences applicable to the program, providing details on any preference requirement, and providing a description of the types of infrastructure project that receive funding under the program. Additionally, for each program, agencies should include the number of recipients and the available funds for the program in each fiscal year.

This report errs on the side of over-inclusiveness, given the requirement to submit this report at this time. As instructed by OMB, Treasury has included all programs for which funds may be obligated for infrastructure under any award. After OMB releases implementation guidance as outlined in Section 70915 of the IIJA, Treasury will re-evaluate its identification of agency programs that are subject to Build America, Buy America requirements.

2. Financial Assistance Programs for Infrastructure

Treasury's main organizational components that provide financial assistance include: The Internal Revenue Service and the Departmental Offices (including the Community Development Financial Institutions Fund and the Office of Recovery Programs (ORP)). Of those components, based on program analysis, only DO has Federal financial assistance programs related to infrastructure that merit inclusion in the 60-day report. This section identifies and describes the active programs applicable to the IIJA.

2.1 ORP Active Financial Assistance Programs for Infrastructure

• *Coronavirus State and Local Fiscal Recovery Fund CFDA # 21.027 (SLFRF)*—Public Law 117–2. Sections 602 and 603 of the Social Security Act, as added by section 9901 of the American Rescue Plan Act (the ARP Act) established the Coronavirus State Fiscal Recovery Fund and Coronavirus Local Fiscal Recovery Fund respectively (referred to as the ''Coronavirus State and Local Fiscal Recovery Funds'' or ''SLFRF''). SLFRF provides $350 billion in total funding for Treasury to make payments to States (defined to include the District of Columbia), U.S. Territories (defined to include Puerto Rico, U.S. Virgin Islands, Guam, Northern Mariana Islands, and American Samoa), Tribes, Metropolitan cities, Counties, Consolidated Governments, and (through States) Nonentitlement units of local government for eligible activities outlined in sections 602(c) and 603(c) of the Social Security Act, and Treasury's implementing regulations, 31 CFR part 35.

• *Capital Projects Fund CFDA # 21.029 (CPF)*—Public Law 117–2. Title III Section 604 of the ARP Act established the Capital Projects Fund and provides $10 billion for Treasury to make payments to States, Tribes, Territories, and Freely Associated States to carry out critical capital projects that directly enable work, education, and health monitoring including remote options in response to the public health emergency with respect to COVID–19.

• *Homeownership Assistance Fund CFDA # 21.026 (HAF)*—Public Law 117–2. Title III, Subtitle B, Section 3206 of the ARP Act established the Homeowner Assistance Fund and provides $9.9 billion for Treasury to make payments to States (defined to include the District of Columbia, Puerto Rico, U.S. Virgin Islands, Guam, Northern Mariana Islands, and American Samoa), Tribes or tribally designated housing entities, as applicable, and the Department of Hawaiian Home Lands to mitigate financial hardships associated with the coronavirus pandemic, including for the purposes of preventing homeowner mortgage delinquencies, defaults, foreclosures, loss of utilities or home energy services, and displacements of homeowners experiencing financial hardship after January 21, 2020, through qualified expenses related to mortgages and housing.

2.2 DO Active Financial Assistance Programs for Infrastructure

The Resources and Ecosystems Sustainability, Tourist Opportunities, and Revived Economies of the Gulf Coast States Act of 2012 (RESTORE Act) Direct Component Program, CFDA # 21.015—On July 6, 2012, the President signed into law the RESTORE Act to respond to the April 20, 2010 *Deepwater Horizon* Oil Spill in the Gulf of Mexico and the resulting ecological and economic disaster caused by the explosion on, and sinking of, the mobile offshore drilling unit *Deepwater Horizon.* The RESTORE Act authorized five grant programs to fund programs, projects, and activities that restore and protect the environment and economy of the Gulf Coast region. Treasury's Office of Gulf Coast Restoration administers two of the five grant programs, the Direct Component and Centers of Excellence Research Grants Programs, which are listed under a single CFDA number. The RESTORE Act also established the Gulf Coast Restoration Trust Fund that is funded by eighty percent of the administrative and civil penalties paid by the responsible parties pursuant to a court order, negotiated settlement, or other instrument under section 311 of the Federal Water Pollution Control Act in connection with the Deepwater Horizon oil spill. The Trust Fund provides funding for the five federal financial assistance programs authorized by the RESTORE Act (not appropriated funds). The Direct Component program provides funding to four Gulf Coast States, twenty-three Florida counties, and twenty Louisiana parishes, and the Centers of Excellence Research Grants Program provide funding to five states for eligible activities outlined in the RESTORE Act and Treasury's implementing regulations, 31 CFR part 34. The Direct Component Program funds some infrastructure projects as defined by Section 70912(5) of the IIJA, but many projects funded by the Direct Component Program are not for infrastructure. The Centers of Excellence Research Grants Program does not fund any infrastructure. See Section 3 for further details.

3. Financial Assistance Infrastructure Programs Deficiency Determination

Table 3–1 depicts the deficiency status of each Treasury financial assistance infrastructure program, as it relates to Section 70914 [1] of the IIJA.

[1] Section 70914 of the IIJA provides that, as of May 14, 2022, none of the funds made available for a Federal financial assistance program for infrastructure, including each applicable program, may be obligated for a project unless all of the iron, steel, manufactured products, and construction materials used in the project are produced in the United States.

TABLE 3–1 DEFICIENCY DETERMINATION BY PROGRAM

Entity	Program	Deficiency status [2]	Reason for deficiency	Domestic content procurement preference applicable [3]	Type of infrastructure projects that receive funding under the program	# of recipients in FY 19, 20 and 21	FY 19, 20 and 21 total available funding
ORP	SLFRF	Deficient as of 1/14/21.	The program is deficient with respect to Section 70914, per item 1 of section 70913 (see footnote 3). The Program does not plan to issue awards after May of 2022.	NA	Recipients have significant flexibility on how to allocate funds, and projects may include necessary investments in water, sewer, or broadband infrastructure; a broad variety of investments to respond to the public health and negative economic impacts of the pandemic; and a broad variety of infrastructure that might typically be funded under the provision of government services.	FY 19–FY 20: NAFY 21: 4,921.	FY 19, FY 20: NA. FY 21: $350,000,000,000.
	CPF	Deficient as of 1/14/21.	The program is deficient with respect to Section 70914, per item 1 of section 70913 (see footnote 3). All awards will be issued before May 2022, except for a subset of Tribal awards.	NA	Recipients have significant flexibility on how to allocate funds. We expect some funding to be used for broadband infrastructure projects and for construction of community centers, and similar facilities.	FY 19–FY 20: NA. FY 21: NA	FY 19, FY 20: NA. FY 21: NA.
	HAF	Deficient as of 1/14/21.	The program is deficient with respect to Section 70914, per item 1 of section 70913 (see footnote 3) The Program does not plan to issue awards after May of 2022.	NA	Projects include measures to prevent homeowner displacement, such as home repairs to maintain the habitability of a home, including the reasonable addition of habitable space to alleviate overcrowding, or assistance to enable households to receive clear title to their properties.	FY 19–FY 20: NA. FY 21: 353	FY 19, FY 20: NA. FY 21: $9,961,000,000.
DO	RESTORE Act	Deficient as of 1/14/21.	The program is deficient with Section 70914, per item 1 of section 70913 (see footnote 3 on page 6).	NA	The RESTORE Act, which authorized the Direct Component Program, lists eleven eligible project or program purposes, two of which are ''[i]infrastructure projects benefitting the economy or ecological resources, including port infrastructure'' and ''[c]coastal flood protection or related infrastructure.''. The Direct Component-funded projects with a primary eligible purpose of ''infrastructure'' vary widely. To date, these have included building a roll-on/roll-off facility at a port, wastewater treatment plants, drinking water treatment plants, and roads and bridges, as well as the construction or upgrading of levees, rock jetties, and other flood protection structures. Other Direct Component-funded projects are not considered to have a primary purpose of infrastructure because they are aligned to one of the nine other Direct Component eligible purposes, even though the projects may involve construction. For example, the construction of an aquarium falls under the Direct Component eligible purpose of ''[p]promotion of tourism in the Gulf Coast Region, including promotion of recreational fishing,'' not an infrastructure purpose.	FY 19: 11 FY 20: 17 FY 21: 14 [4]	FY 19: $129,970,078.64. FY 20: $99,265,125.10. FY 21: $42,585,192.28.[5]

[2] As discussed in M–22–08 and pursuant to the IIJA, an infrastructure program is considered deficient and therefore inconsistent with section 70914 if: Per section 70913 it does not require that all of the iron, steel, manufactured products, and construction materials used in the project are produced in the United States; it does not issue waivers and written justifications as specified in

Continued

(Authority: Pub. L. No 117–58 (Nov. 15, 2021))

Dated: January 18, 2022.

Marti Adams,

Executive Secretary.

[FR Doc. 2022–01169 Filed 1–20–22; 8:45 am]

BILLING CODE 4810–AK–P

section 70914; or (3) it is subject to a waiver of general applicability.

[3] Domestic content procurement preferences include the following: section 313 of title 23, United States Code; section 5323(j) of title 49, United States Code; section 22905(a) of title 49, United States Code; section 50101 of title 49, United States Code; section 603 of the Federal Water Pollution Control Act (33 U.S.C. 1388); section 1452(a)(4) of the Safe Drinking Water Act (42 U.S.C. 300j–12(a)(4)); section 5035 of the Water Infrastructure Finance and Innovation Act of 2014 (33 U.S.C. 3 3914); any domestic content procurement preference included in an appropriations Act; and any other domestic content procurement preference in Federal law (including regulations). It does not include the Uniform Guidance.

[4] This is the number of entities receiving new Direct Component awards in each of the fiscal years indicated. This does not include entities with active awards received in prior years.

[5] The figures presented in this column include all new Treasury RESTORE Act funded obligations for the Direct Component Program (no Centers of Excellence Program obligations are included since that program does not fund any infrastructure or construction). This encompasses obligations related to all new awards, all monetary amendments, and all closeouts (the latter often resulting in a deobligation).

DEPARTMENT OF VETERANS AFFAIRS

[OMB Control No. 2900–0682]

Agency Information Collection Activity: Advertising, Sales, Enrollment Materials, and Candidate Handbooks

AGENCY: Veterans Benefits Administration, Department of Veterans Affairs.

ACTION: Notice.

SUMMARY: Veterans Benefits Administration, Department of Veterans Affairs (VA), is announcing an opportunity for public comment on the proposed collection of certain information by the agency. Under the Paperwork Reduction Act (PRA) of 1995, Federal agencies are required to publish notice in the **Federal Register** concerning each proposed collection of information, including each proposed revision of a currently approved collection, and allow 60 days for public comment in response to the notice.

DATES: Written comments and recommendations on the proposed collection of information should be received on or before March 22, 2022.

ADDRESSES: Submit written comments on the collection of information through Federal Docket Management System (FDMS) at *www.Regulations.gov* or to Nancy J. Kessinger, Veterans Benefits Administration (20M33), Department of Veterans Affairs, 810 Vermont Avenue NW, Washington, DC 20420 or email to *nancy.kessinger@va.gov.* Please refer to ''OMB Control No. 2900–0682'' in any correspondence. During the comment period, comments may be viewed online through FDMS.

FOR FURTHER INFORMATION CONTACT: Maribel Aponte, Office of Enterprise and Integration, Data Governance Analytics (008), 1717 H Street NW, Washington, DC 20006, (202) 266–4688 or email *maribel.aponte@va.gov.* Please refer to ''OMB Control No. 2900–0682'' in any correspondence.

SUPPLEMENTARY INFORMATION: Under the PRA of 1995, Federal agencies must obtain approval from the Office of Management and Budget (OMB) for each collection of information they conduct or sponsor. This request for comment is being made pursuant to Section 3506(c)(2)(A) of the PRA.

With respect to the following collection of information, VBA invites comments on: (1) Whether the proposed collection of information is necessary for the proper performance of VBA's functions, including whether the information will have practical utility; (2) the accuracy of VBA's estimate of the burden of the proposed collection of information; (3) ways to enhance the quality, utility, and clarity of the information to be collected; and (4) ways to minimize the burden of the collection of information on respondents, including through the use of automated collection techniques or the use of other forms of information technology.

Authority: 38 CFR 21.4252(h).

Title: Advertising, Sales, Enrollment Materials, and Candidate Handbooks.

OMB Control Number: 2900–0682.

Type of Review: Revision of a currently approved collection.

Abstract: This notice is replacing the previous 60-Day Notice, Vol. 86 No. 239 that was published on January 16, 2021. A Correction Notice was published in Vol. 87 No. 1 on January 3, 2022. The statute prohibits approval of the enrollment of a Veteran in a course if the educational institution uses advertising, sales, or enrollment practices that are erroneous, deceptive, or misleading either by actual statement, omission, or intimation. The advertising, sales and enrollment materials are reviewed to determine if the institution is in compliance with guidelines for approval. VA received two public comments which questions the 15-minute length of burden time needed to gather the information required for VA review upon compliance for this ICR. After careful assessment, VA agrees with the comments, and have therefore adjusted the time burden from 15 minutes to 60 minutes accordingly, and as result have updated the Supporting Statement to reflect the change.

Affected Public: Individuals and Households.

Estimated Annual Burden: 5,525 hours.

Estimated Average Burden per Respondent: 60 minutes.

Frequency of Response: Annually.

Estimated Number of Respondents: 5,525.

By direction of the Secretary.

Maribel Aponte,

VA PRA Clearance Officer, Office of Enterprise and Integration/Data Governance Analytics, Department of Veterans Affairs.

[FR Doc. 2022–01148 Filed 1–20–22; 8:45 am]

BILLING CODE 8320–01–P

FEDERAL REGISTER

Vol. 87 Friday,

No. 14 January 21, 2022

Part II

Department of Transportation

Federal Motor Carrier Safety Administration

49 CFR Part 391

Qualifications of Drivers; Vision Standard; Final Rule

DEPARTMENT OF TRANSPORTATION

Federal Motor Carrier Safety Administration

49 CFR Part 391

[Docket No. FMCSA–2019–0049]

RIN 2126–AC21

Qualifications of Drivers; Vision Standard

AGENCY: Federal Motor Carrier Safety Administration (FMCSA), Department of Transportation (DOT).

ACTION: Final rule.

SUMMARY: FMCSA amends its regulations to permit individuals who do not satisfy, with the worse eye, either the existing distant visual acuity standard with corrective lenses or the field of vision standard, or both, to be physically qualified to operate a commercial motor vehicle (CMV) in interstate commerce under specified conditions. Currently, such individuals are prohibited from driving CMVs in interstate commerce unless they obtain an exemption from FMCSA. The new alternative vision standard replaces the current vision exemption program as the basis for determining the physical qualification of these individuals.

DATES: This final rule is effective March 22, 2022.

Comments on the information collections in this final rule must be submitted to the Office of Information and Regulatory Affairs (OIRA) at the Office of Management and Budget (OMB) by February 22, 2022.

Petitions for Reconsideration of this final rule must be submitted to the FMCSA Administrator no later than February 22, 2022.

ADDRESSES: Comments and recommendations for the information collections should be sent within 30 days of publication of this final rule to *https://www.reginfo.gov/public/do/PRAMain.* Find the particular information collection by selecting ''Currently under Review—Open for Public Comments'' or by entering the OMB control number in the search bar.

FOR FURTHER INFORMATION CONTACT: Ms. Christine A. Hydock, Chief, Medical Programs Division, FMCSA, 1200 New Jersey Avenue SE, Washington, DC 20590–0001, (202) 366–4001, *fmcsamedical@dot.gov.*

SUPPLEMENTARY INFORMATION: FMCSA organizes this final rule as follows:

I. Availability of Rulemaking Documents
II. Executive Summary
A. Purpose and Summary of the Final Rule
B. Summary of the Major Provisions
C. Costs and Benefits
III. Abbreviations
IV. Legal Basis for the Rulemaking
V. Regulatory History
A. NPRM
B. MRB Task 21–1 and Report
C. Notice of Availability
VI. Discussion of Comments and Responses
A. Comment Overview
B. Data Used To Determine the Safety Impact of the Alternative Vision Standard
C. The Two-Step Physical Qualification Process
D. The Role of Ophthalmologists and Optometrists
E. Frequency of Vision Evaluations
F. Vision Evaluation Report, Form MCSA–5871
G. The Role of MEs
H. Frequency of Physical Qualification Examinations and Maximum Period of Certification
I. Individuals Eligible for the Alternative Vision Standard
J. Acceptable Field of Vision
K. Meaning of *Stable* Vision
L. Elimination of the Exemption Program's 3-Year Driving Experience Criterion
M. Road Test Requirement for Alternative Vision Standard
N. Review of an Individual's Safety Performance
O. Restricting Eligibility To Use the Alternative Vision Standard by Vehicle Type
P. The Alternative Vision Standard Creates More Employment Opportunities
Q. Change to the Medical Examination Process in 49 CFR 391.43(b)(1)
R. Outside the Scope of the Rulemaking
VII. Changes From the NPRM
A. Alternative Vision Standard
B. The Vision Evaluation Report, Form MCSA–5871
VIII. International Impacts
IX. Section-by-Section Analysis
A. Regulatory Provisions
B. Guidance
X. Regulatory Analyses
A. Executive Order (E.O.) 12866 (Regulatory Planning and Review), E.O. 13563 (Improving Regulation and Regulatory Review), and DOT Regulatory Policies and Procedures
B. Congressional Review Act
C. Regulatory Flexibility Act (Small Entities)
D. Assistance for Small Entities
E. Unfunded Mandates Reform Act of 1995
F. Paperwork Reduction Act
G. E.O. 13132 (Federalism)
H. Privacy
I. E.O. 13175 (Indian Tribal Governments)
J. National Environmental Policy Act of 1969

I. Availability of Rulemaking Documents

To view any documents mentioned as being available in the docket or comments received, go to *https://www.regulations.gov/docket/FMCSA-2019-0049/document* and choose the document to review. To view comments, click the notice of proposed rulemaking (NPRM) or Medical Review Board Task 21–1 Report: Proposed Alternative Vision Standard, and click ''Browse Comments.'' If you do not have access to the internet, go to Dockets Operations at the Department of Transportation, Room W12–140, 1200 New Jersey Avenue SE, Washington, DC 20590–0001, between 9 a.m. and 5 p.m., Monday through Friday, except Federal holidays. To be sure someone is there to help you, please call (202) 366–9317 or (202) 366–9826 before visiting Dockets Operations.

II. Executive Summary

A. Purpose and Summary of the Final Rule

FMCSA amends its regulations to permit an individual who does not satisfy, with the worse eye, either the existing distant visual acuity standard with corrective lenses or the field of vision standard, or both, to be physically qualified to operate a CMV in interstate commerce under specified conditions. The individual must satisfy the new alternative vision standard, along with FMCSA's other physical qualification standards. In addition, with limited exceptions, individuals physically qualified under the alternative standard for the first time must satisfactorily complete a road test administered by the employing motor carrier before operating a CMV in interstate commerce. This rule eliminates the need for the current Federal vision exemption program, as well as the grandfather provision in 49 CFR 391.64 for drivers operating under the previously administered vision waiver study program. The alternative vision standard enhances employment opportunities while remaining consistent with FMCSA's safety mission.

B. Summary of the Major Provisions

This rule establishes an alternative vision standard, as proposed in the NPRM (86 FR 2344 (Jan. 12, 2021)), with minor clarifications. The final rule clarifies that the alternative vision standard is applicable to individuals who do not satisfy, with the worse eye, the existing FMCSA distant visual acuity standard with corrective lenses or the field of vision standard, or both.

The alternative vision standard is comparable to the regulatory framework FMCSA adopted in § 391.46 for individuals with insulin-treated diabetes mellitus (see 83 FR 47486 (Sept. 19, 2018)). The alternative vision standard takes the same collaborative

approach to medical certification that includes a medical specialist, in this case an ophthalmologist or optometrist, in addition to a medical examiner (ME) on FMCSA's National Registry of Certified Medical Examiners.

Before an individual may be medically certified under the alternative vision standard, the individual must have a vision evaluation conducted by an ophthalmologist or optometrist. The ophthalmologist or optometrist records the findings of the vision evaluation and provides specific medical opinions on the new Vision Evaluation Report, Form MCSA–5871. Then, an ME performs a physical qualification examination and determines whether the individual meets the alternative vision standard, as well as FMCSA's other physical qualification standards. If the ME determines the individual meets the physical qualification standards, the ME may issue a Medical Examiner's Certificate (MEC), Form MCSA–5876, for a maximum of 12 months.

In making the physical qualification determination, the ME considers the information in the Vision Evaluation Report, Form MCSA–5871, and utilizes independent medical judgment to apply the following four standards. The new alternative vision standard provides that, to be physically qualified, the individual must: (1) Have, in the better eye, distant visual acuity of at least 20/40 (Snellen), with or without corrective lenses, and field of vision of at least 70 degrees in the horizontal meridian; (2) be able to recognize the colors of traffic signals and devices showing standard red, green, and amber; (3) have a stable vision deficiency; and (4) have had sufficient time pass since the vision deficiency became stable to adapt to and compensate for the change in vision. FMCSA clarifies in the last of the four standards that there must be a period for the individual to adapt to and compensate for the vision loss after the vision deficiency is deemed stable by a medical professional.

Subject to limited exceptions, individuals physically qualified under the alternative vision standard for the first time must satisfactorily complete a road test before operating in interstate commerce. The employing motor carrier conducts the road test in accordance with the road test already required by § 391.31. Individuals are excepted from the road test requirement if they have 3 years of intrastate or specific excepted interstate CMV driving experience with the vision deficiency, hold a valid Federal vision exemption, or are medically certified under the previously administered vision waiver study program in § 391.64(b).

This rule takes a more individualized approach to medical certification than the vision exemption program it replaces and ensures that individuals medically certified under the alternative vision standard are physically qualified to operate a CMV safely. The process creates a clear and consistent framework to assist MEs with the physical qualification determination that is equally as effective as a program based on considering exemptions under 49 U.S.C. 31315(b). In addition, the approach of MEs making the physical qualification determination, instead of FMCSA as in the current exemption program, is consistent with Congress' directive in 49 U.S.C. 31149(d) for trained and certified MEs to determine the individual's physical qualification to operate a CMV.

The alternative vision standard replaces the current vision exemption program as the basis for determining the physical qualification of individuals to operate a CMV. Accordingly, the 1,967 current vision exemption holders [1] will no longer have to apply for an exemption. Exemption holders have 1 year after the effective date of this rule to comply with the alternative vision standard, at which time all exemptions issued under 49 U.S.C. 31315(b) become void. This transition year provides time to learn the new process for individuals whose MEC, Form MCSA–5876, expires near the time this rule becomes effective. Exemption holders will be notified by letter with details of the transition to the new standard.

Similarly, the approximately 1,800 individuals currently physically qualified under the grandfather provisions in § 391.64(b) [2] have 1 year after the effective date of this rule to comply. One year after the effective date of this rule all MECs, Form MCSA–5876, issued under § 391.64(b) become void.

C. Costs and Benefits

FMCSA estimates this rule will reduce barriers to entry, thereby increasing employment opportunities, for current and future CMV drivers. The 1,967 drivers holding vision exemptions will no longer have to apply for an exemption, and potential drivers who would not qualify for an exemption because they do not have 3 years of intrastate driving experience may meet the alternative vision standard and be able to operate a CMV in interstate commerce. Additionally, previously qualified interstate CMV drivers who no longer satisfy, with the worse eye, either the distant visual acuity standard with corrective lenses or field of vision standard, or both, will be able to return sooner than 3 years to operating in interstate commerce. These drivers are also relieved of the time and paperwork burden associated with applying for or renewing an exemption.[3] A one-time road test is less burdensome on drivers than obtaining 3 years of intrastate driving experience and addresses the consideration that some drivers live in States that do not issue vision waivers. The final rule results in incremental cost savings of approximately $1.6 million annually by eliminating the need for the Federal vision exemption program. This estimate includes the additional annual impact of approximately $44,000 for the road test. The Agency does not expect negative impacts on safety. The Agency also notes that no safety organizations commented on the NPRM.

III. Abbreviations

ACOEM American College of Occupational and Environmental Medicine
AOA American Optometric Association
ATA American Trucking Associations, Inc.
BLS Bureau of Labor Statistics
CDL Commercial Driver's License
CFR Code of Federal Regulations
CMV Commercial Motor Vehicle
DOL Department of Labor
DOT Department of Transportation
E.O. Executive Order
FHWA Federal Highway Administration
FMCSA Federal Motor Carrier Safety Administration
FR Federal Register
GDP Gross Domestic Product
ICR Information Collection Request
ME Medical Examiner
MEC Medical Examiner's Certificate, Form MCSA–5876
MRB Medical Review Board
NAICS North American Industry Classification System
NOA Notice of Availability
NPRM Notice of Proposed Rulemaking
OIRA Office of Information and Regulatory Affairs
OMB Office of Management and Budget
OOIDA Owner-Operator Independent Drivers Association
RFA Regulatory Flexibility Act
SBA Small Business Administration
Secretary Secretary of Transportation
§ Section
U.S.C. United States Code

IV. Legal Basis for the Rulemaking

FMCSA has authority under 49 U.S.C. 31136(a) and 31502(b)—delegated to the Agency by 49 CFR 1.87(f) and (i),

[1] FMCSA data as of August 5, 2021.

[2] FMCSA data as of August 5, 2021.

[3] As discussed below in section X.F. with respect to the information collection titled ''Medical Qualification Requirements,'' FMCSA attributes 2,236 annual burden hours at a cost of $67,486 for drivers to request and maintain a vision exemption. The final rule eliminates this entire burden.

respectively—to establish minimum qualifications, including physical qualifications, for individuals operating CMVs in interstate commerce. Section 31136(a)(3) requires specifically that the Agency's safety regulations ensure that the physical condition of CMV drivers is adequate to enable them to operate their vehicles safely and that certified MEs trained in physical and medical examination standards perform the physical examinations required of such drivers.

In addition to the statutory requirements specific to the physical qualifications of CMV drivers, section 31136(a) requires the Secretary of Transportation (Secretary) to issue regulations on CMV safety, including regulations to ensure that CMVs ''are maintained, equipped, loaded, and operated safely'' (section 31136(a)(1)). The remaining statutory factors and requirements in section 31136(a), to the extent they are relevant, are also satisfied here. The final rule does not impose any responsibilities on CMV drivers that ''impair their ability to operate the vehicles safely'' (section 31136(a)(2)), or ''have a deleterious effect on the physical condition'' of CMV drivers (section 31136(a)(4)). FMCSA does not anticipate that drivers will be coerced to operate a vehicle because of this rule (section 31136(a)(5)).

Additionally, in 2005, Congress authorized the creation of the Medical Review Board (MRB), comprised of experts in a variety of medical specialties relevant to the driver fitness requirements, to provide medical advice and recommendations on physical qualification standards (49 U.S.C. 31149(a)). The position of Chief Medical Examiner was authorized at the same time (49 U.S.C. 31149(b)). Under section 31149(c)(1), the Agency, with the advice of the MRB and Chief Medical Examiner, is directed to establish, review, and revise medical standards for CMV drivers that will ensure their physical condition is adequate to enable them to operate the vehicles safely (see also 49 U.S.C. 31149(d)). Finally, the Secretary has discretionary authority under 49 U.S.C. 31133(a)(8) to prescribe recordkeeping and reporting requirements.

FMCSA has considered the costs and benefits associated with this final rule (49 U.S.C. 31136(c)(2)(A) and 31502(d)). Those factors are discussed in the Regulatory Analyses section of this rule.

V. Regulatory History

A. NPRM

On January 12, 2021, FMCSA published an NPRM titled ''Qualifications of Drivers; Vision Standard'' (86 FR 2344). The NPRM included a detailed discussion of the background and regulatory history for this action, including the existing vision standard, the vision waiver study program and grandfathered drivers, and the Federal vision exemption program. It also included a discussion of the reports and analyses undertaken since 1990 to gather information and evaluate the vision standard, the vision waiver study program, and the vision exemption program, as well as the MRB recommendations pertaining to vision and FMCSA's conclusions regarding those reports and analyses. While not repeated here, these discussions can be found in the NPRM (86 FR 2348–56).

A detailed discussion of the rationale for the proposed alternative vision standard is set forth in the NPRM (86 FR 2356–61) and will not be repeated here. Summaries of the relevant provisions of the NPRM are included in the discussion of the comments below. The NPRM's comment period closed on March 15, 2021.

B. MRB Task 21–1 and Report

The NPRM provided that following the closure of the comment period FMCSA would ask the MRB to review all comments from medical professionals and associations. Accordingly, in May 2021, FMCSA requested in MRB Task 21–1 that the MRB review and analyze the nine comments from medical professionals and associations, make recommendations regarding the proposed alternative vision standard, and identify factors the Agency should consider regarding next steps in the vision rulemaking. In addition, FMCSA requested the MRB's recommendations with respect to whether the information requested from ophthalmologists and optometrists on the proposed Vision Evaluation Report, Form MCSA–5871, provided sufficient information for an ME to make a medical certification determination.

In May 2021, the MRB held a public meeting to consider MRB Task 21–1, among other topics. On July 20, 2021, the MRB provided its recommendations to FMCSA in MRB Task Report 21–1.[4] The MRB made the following recommendations:

I. Overview

A. With respect to the medical aspects of the proposed alternative vision standard only, if the MRB does not make a specific recommendation to change a provision, the MRB concurs with the provision as proposed in the January 2021 NPRM.

B. The MRB recommends that the Agency deemphasize that the alternative vision standard begins with the vision evaluation because the individual may be examined first by the medical examiner.

II. Recommendations for the Regulatory Standards

A. The MRB recommends that the current field of vision requirement be changed from 70 degrees to 120 degrees for the alternative vision standard for monocular vision drivers.

B. The MRB agrees that the requirement for sufficient time to adapt to and compensate for the vision deficiency should not be changed in the proposed alternative vision standard. The MRB notes it does not have sufficient data to establish a specific waiting period for an individual who has a new vision deficiency.

III. Recommendations for the Vision Evaluation Report

A. The MRB recommends that the physical qualification standards for the alternative vision standard, as set forth in the paragraph below from Task 21–1 but modified to reflect a field of vision of at least 120 degrees, be added to page 1 in the instructions after FMCSA's definition of monocular vision:

The proposal would provide that, to be physically qualified under the alternative vision standard, the individual must: (1) Have in the better eye distant visual acuity of at least 20/40 (Snellen), with or without corrective lenses, and field of vision of at least 120 degrees in the horizontal meridian; (2) be able to recognize the colors of traffic signals and devices showing standard red, green, and amber; (3) have a stable vision deficiency; and (4) have had sufficient time to adapt to and compensate for the vision deficiency.

B. The MRB recommends that the Agency expand the medical opinion in question 12 to require that the individual can drive a CMV safely with the vision condition. The MRB notes that the medical opinion provided by the ophthalmologist or optometrist regarding whether the individual has adapted to and compensated for the change in vision sufficiently encompasses depth perception. The MRB notes further that question 12 sufficiently implies that time is needed to adapt and compensate for the change in vision but appropriately relies on the ophthalmologist or optometrist conducting the vision evaluation to determine the appropriate period of time on a case-by-case basis.

C. The MRB recommends that the requests for information about stability in questions

[4] Details of the meeting, including MRB Task 21–1, the MRB Task 21–1 Report, and supporting materials used by the MRB, are posted on the Agency's public website at *https://www.fmcsa.dot.gov/medical-review-board-mrb-meeting-topics* (last accessed Aug. 31, 2021). The MRB Task 21–1 Report is also available in the docket at *https://www.regulations.gov/document/FMCSA-2019-0049-0117.*

11 and 13 both be retained. The questions solicit different information.

D. The MRB recommends that the Agency change the order of the requested information to be questions 1 through 9, 10, 12, 13, and then 11.

E. The MRB recommends that the vision evaluation report not request information relating to severe non-proliferative diabetic retinopathy and proliferative diabetic retinopathy because they are evaluated separately under the standard for insulin-treated diabetes mellitus.

C. Notice of Availability

On August 24, 2021, FMCSA published a notice of availability (NOA) of the MRB's recommendations in the **Federal Register** and requested public comment on them (86 FR 47278). The comment period closed on September 23, 2021.

VI. Discussion of Comments and Responses

A. Comment Overview

In this final rule, FMCSA responds to public comments to the NPRM and the NOA regarding the recommendations in the MRB Task 21–1 Report.

1. NPRM

In response to the NPRM, FMCSA received 69 submissions. One submission was identified as not relevant, two submissions were duplicates, and one commenter provided two different submissions. Accordingly, 65 commenters (primarily individuals) provided responsive comments to the NPRM. The commenters were healthcare providers, one medical association, drivers, motor carriers, two trade associations, and private citizens. Fourteen commenters were anonymous. No safety organizations commented on the NPRM.

The majority of commenters (45) expressed general support for the proposed rule. These commenters included a board-certified retina surgeon and ophthalmologist, two MEs, CMV drivers with either Federal vision exemptions or State vision waivers, former drivers who no longer satisfy the vision standard, individuals who have not had the opportunity to drive a CMV because of their vision, the Owner-Operator Independent Drivers Association (OOIDA), and individuals who viewed the rule as reducing discrimination. Common reasons cited for supporting the proposal include the following: The evidence shows monocular drivers are safe and have no adverse impact on safety; the rule would remove barriers to entry, create job opportunities, encourage more individuals to enter the workforce, keep experienced drivers, and reduce the driver shortage; the rule is modeled on the approach used to eliminate the exemption program and create an alternative physical qualification standard for insulin-treated diabetes mellitus that has worked well; the rule would be a step toward less discrimination and more inclusion in the workforce; and the proposed standard is more streamlined than the exemption process so it would decrease time and paperwork burdens for drivers.

Twenty commenters generally opposed the proposed rule (including commenters who supported the proposal in concept but wanted further study before implementing it). These commenters included four MEs, the American College of Occupational and Environmental Medicine (ACOEM), Concentra (a healthcare company that delivers occupational medicine and urgent care services to employers and patients), two drivers, and the American Trucking Associations, Inc. (ATA). Common reasons cited for opposing the proposal include the following: The proposal fails to demonstrate an appropriate level of safety or the data is inconclusive on safety; findings from drivers enrolled in the waiver and exemption programs cannot be applied to the general population of drivers; the road test is not a suitable alternative to 3 years of driving experience and places a burden on motor carriers; the field of vision requirement should be greater than 70 degrees; and the MRB has not recommended changes to the vision standard.

2. NOA

In response to the NOA on the MRB Task 21–1 Report, FMCSA received 14 submissions. The commenters were one ME, one medical association, drivers and individuals with vision loss in one eye, one motor carrier, one trade association, private citizens, and five anonymous commenters. No safety organizations commented on the NOA.

The NOA stated that ''Comments must be limited to addressing the recommendations in the MRB Task 21–1 Report'' (86 FR 47279). Only four commenters provided comments that were responsive, at least in part, to the MRB recommendations. Five commenters provided general support for the alternative vision standard. Two commenters opposed the new vision standard. Three comments were outside the scope of the rulemaking.

The MRB's recommendations and public comments responsive to them are addressed where applicable in the discussion of comments and responses below.[5] Because comments to the NOA were limited to the MRB recommendations, comments relating to other aspects of the alternative vision standard are not discussed. FMCSA notes that none of these comments presented new issues or information not raised in the comments submitted in response to the NPRM.

B. Data Used To Determine the Safety Impact of the Alternative Vision Standard

NPRM: FMCSA summarized the reports and analyses undertaken since 1990 to gather information and evaluate the vision standard, previous waiver study program, and current exemption program, as well as the MRB recommendations pertaining to vision. FMCSA concluded that the available information did not call into question the validity of the vision exemption program. The Agency noted the available information did not establish strong relationships between specific measures of vision and their correlation to driver safety. FMCSA acknowledged ''Data on the relationship between monocular vision and crash involvement is sparse, conflicting with respect to crash risk, and not definitive. Moreover, the Agency must exercise caution when interpreting the data because of the different definitions of 'monocular vision' in the literature'' (86 FR 2356).

Accordingly, FMCSA found the experience with the vision waiver study and exemption programs to be most relevant in establishing an alternative vision standard. Based on that experience, FMCSA determined the safety performance of the individuals in the vision waiver study and vision exemption programs is at least as good as that of the general population of CMV drivers. FMCSA stated that, if an individual meets the proposed alternative vision standard, the Agency expects there will be no adverse impact on safety due to the individual's vision.

Comments on the Data Used To Determine the Safety Impact of the Alternative Vision Standard: Robert E. Morris, M.D., a board-certified retina surgeon and ophthalmologist, stated, ''it is well recognized in medical journals that individuals who have experienced a vision loss in one eye can and usually develop compensatory viewing behavior to mitigate the vision loss. My

[5] The MRB indicated in the MRB Task 21–1 Report that it limited its recommendations to the medical aspects of the proposed alternative vision standard. Therefore, FMCSA does not reference the MRB Task 21–1 Report in sections that do not relate to the medical aspects of the alternative vision standard.

experience in treating patients with the loss of vision in one eye is that these individuals, over time, are not limited by their lack of binocularity with respect to driving once they have adapted to and compensated for the change in vision.'' Dr. Morris indicated that if an individual meets the alternative vision standard there will be no adverse impact on safety due to the vision. Dr. Morris encouraged, ''without any reservation,'' that the alternative vision standard be adopted as proposed.

A commenter who is an ME and has examined a moderate number of drivers with monocular vision stated that they have adapted to the monocular vision and ''have been driving professionally successfully.'' The commenter referred to an August 2005 abstract published in *Optometry and Vision Science,* titled ''The Impact of Visual Field Loss on Driving Performance: Evidence from On-Road Driving Assessments,'' that ''concluded 'a large proportion of monocular drivers were safe drivers.' ''

OOIDA stated that the ''research presented demonstrates that individuals with monocular vision can safely operate a CMV.'' OOIDA stated further that ''There is also considerable medical literature indicating that individuals with vision loss in one eye can and do develop compensatory viewing behavior to mitigate their vision loss.'' OOIDA commented that the alternative vision standard ''ensures sufficient physical qualifications are met.''

Three commenters stated studies show the alternative vision standard will not compromise safety. A different commenter stated, ''There is no factual evidence to support the idea that reduced vision has a negative impact on driving abilities.'' Another commenter, a motor carrier, also commented that the alternative vision standard would not increase danger to the public.

A commenter stated the alternative vision standard ''comports with current scientific findings'' and ''is not arbitrary, . . . It is based on actual reports from credentialed professionals.'' The commenter noted that ''safeguards will be in place to catch and mitigate any safety issues.'' For example, an ME makes the vision determinations instead of an FMCSA employee. The road test ensures a driver operating under the alternative vision standard can physically drive the CMV safely. Finally, the proposed 12-month maximum certification period ensures a driver will be re-evaluated in a year to determine continued eligibility for CMV driving.

A commenter who holds a Federal vision exemption stated individuals who have had time to adapt and ''compensate for their deficiency are, indeed, safer and more conscientious than your average driver.'' Several other commenters who hold intrastate vision waivers noted their safe driving records or that their vision does not hinder them in any way. They stated it does not make sense that they can drive in intrastate commerce but not in interstate commerce. A commenter, who has always had monocular vision and has a ''terrific driving record,'' stated ''Having one eye increases your awareness of the need to be diligent about your surroundings.''

In contrast, ACOEM and Concentra commented that the studies cited are inconsistent in the definition of the conditions studied (*i.e.,* different definitions of monocular vision were used) and conclusions reached. They stated that some of the studies reported insufficient evidence of monocular drivers being at higher risk of crash; however, they reminded ''all concerned that lack of evidence of the risk is not evidence of absence.'' They stated that the study findings from drivers enrolled in the vision waiver and exemption programs cannot be applied to the general population of drivers. According to ACOEM and Concentra, the drivers in these programs were a carefully selected (subject to very specific criteria that included 3 years of driving experience and a good driving record), highly motivated, and closely vetted and monitored group. ACOEM added that ''making the jump to apply these findings to the general population of drivers is lacking in sufficient evidence to modify the current vision standard.''

Concentra commented that one of the rebuttals to its concerns will be that there have not been any significant problems with monocular drivers in the last 30 years. It stated this ''could lead one to conclude drivers with monocular vision are as safe as other drivers.'' Concentra reminded readers that data is either absent or conflicting regarding the safety of monocular drivers. Additionally, with such a small percentage of drivers having monocular vision, Concentra stated the ''data will continue to be difficult to obtain in a statistically significant manner.''

Two commenters, who are medical doctors and MEs, stated that the existing vision standard should not be changed. One stated that the existing standard is loose enough as it is. The other added that, as a criterion for safe driving, it is imperative to have acuity in vision to drive a multi-ton vehicle around other drivers and pedestrians on the road. A commenter agreed with the doctors, stating that when it comes to public safety individuals with vision impairments should not drive CMVs because the impairments affect their capabilities. A different commenter who is an ME expressed ''concern about changing the vision requirements.''

ATA commented that since 1992 it has consistently objected to loosening the vision standard in the absence of robust data showing such revisions would not deteriorate the current level of safety. ATA stated it ''has consistently advocated that a revised but universally applied vision standard would be superior to the current exemption program and the inconsistency that results from its ad hoc application.'' ATA noted that its ''members accept FMCSA's analysis that the Agency 'has observed no adverse impact on CMV safety due to the vision exemption program.'" However, ATA continued that it ''strongly objects to FMCSA's use of the federal vision exemption program data without factoring in the safety implications of removing essential safeguards contained within the program to warrant the proposed revision to the vision standard.'' ATA stated that ''FMCSA's NPRM fails to propose a standard that would demonstrably maintain the appropriate level of safety.''

Three commenters recommended that FMCSA undertake further studies before proposing an alternative vision standard. The first commenter stated: (1) The statement about vision data from the ''Visual Requirements and Commercial Drivers'' report supports maintaining the current requirements for overall safety; (2) the MRB recommended in 2008 that the vision standard should not be changed; and (3) the 2008 evidence report summarized that the data was not conclusive to determine crash risk so more study is required. The commenter noted that the accident rate study conducted from August 1992 to November 1995 found the accident rates of both the waiver group and control group were significantly better/lower than that of the national rates because both groups were being monitored. The commenter stated that one can infer that if all CMV drivers were in a similar monitoring program then the overall national accident rates would follow this reduced accident rate trend and improve overall safety. The commenter also stated that, before any reduction to existing vision standards can occur, all relevant data must be evaluated through consistent methodologies (*i.e.,* the creation of studies, defined terms, data collection, reports, documentation standards, safety standards, etc.). The second commenter supported the ''idea of this rule,'' but the commenter stated

that further study must be done to determine the full impact of this rule before it is adopted. The third commenter stated that, as ''the study results are mixed, a more detailed study or review of the available literature should be conducted before this rule is finalized. The current literature does not appear to support the argument that there will be no impact on safety.''

One commenter noted a finding in the November 2016 Analysis Brief that the crash rate of vision exemption drivers was statistically different and higher than the crash rate in the control group. That commenter ''would feel safer if the vision standards became a little stricter for CMVs.''

Another commenter stated the proposed amendment finds ''the perfect balance between the correct qualification need for these individuals and road safety.'' The commenter continued that modification of the existing vision standard is needed and the proposal seems to provide a framework for who ensures proper evaluation and criteria are met. However, the commenter noted the need to remain vigilant of the data presented because of inconsistencies among studies and ''limitations in regard to our populations.''

A commenter, who acknowledged not reading the reports discussed in the NPRM, stated that as a safety-minded professional the commenter saw ''the reduced standards as a gateway for more accidents.'' The commenter asked, if FMCSA has data to indicate drivers with vision exemptions had no significant issues, is it possible the data was based on limited markets where drivers operated in areas with less traffic. The commenter concluded that the alternative vision standard ''will have a profound impact on public safety'' and ''hope[d] the FMCSA discards this NPRM in the interest of public safety.''

Several additional commenters opposed the alternative vision standard based on general safety concerns. For example, one commenter stated, while agencies are working to get more drivers on the road and make it easier for drivers to obtain their Federal medical certification, ''there should remain certain criteria for obvious safety reasons.'' The commenter continued that an amendment to the vision standard would not be in the best interest of the driver or the public on the road. Similarly, a different commenter noted the rule would be effective in creating more job opportunities and saving a big amount of money but did ''not think that this rule is effective in ensuring roads are safe for every driver.'' Another commenter stated our roads are dangerous enough already and did not want people with vision impairments on the road. One commenter, who has been driving for more than 34 years, stated the vision standards should be left alone. Finally, another commenter stated that FMCSA needs to be more worried about other issues and that the existing standard is not a cause in that many accidents.

MRB Task 21–1 Report: The MRB stated with respect to the medical aspects of the proposed alternative vision standard only, if the MRB did not make a specific recommendation to change a provision, the MRB concurred with the provision as proposed in the January 2021 NPRM. The MRB did not recommend that FMCSA forego adoption of the alternative vision standard.

Comments on MRB Task 21–1 Report: ATA repeated its prior comments that the data on which the rule is based is insufficient. ATA stated data collected from the vision exemption program included a requirement that drivers have 3 years of intrastate driving experience with a stable vision deficiency and exempted drivers must meet strict driving record requirements. ''Accordingly, the data collected under the exemption program does not accurately indicate the level of safety that can be expected from all drivers qualified under the proposed alternative standard should the new standard remove these safeguards.'' ATA urged FMCSA ''to collect more data on the safety of drivers with a vision deficiency prior to adopting the alternative standard as introduced.''

Response: The Agency stands by its conclusion that individuals who satisfy the alternative vision standard requirements do not create an increased risk of unsafe operation of a CMV due to their vision that would cause injury to persons or property. The alternative vision standard is therefore ''adequate to enable them to operate the vehicles safely'' (49 U.S.C. 31136(a)(3)). Indeed, the comments provided by Dr. Morris,[6] a board-certified retina surgeon and ophthalmologist who encouraged the adoption of the alternative standard without reservation, are consistent with FMCSA's assessment of the safety impact of the new standard. Commenters provided no new information or data that persuades the Agency to depart from its conclusion.[7] Moreover, the MRB generally supports moving ahead with an alternative vision standard.

The Agency acknowledges, as it did in the NPRM, that the data on the relationship between monocular vision and crash involvement is sparse, conflicting with respect to crash risk, and not definitive. It does not establish strong relationships between specific measures of vision and their correlation to driver safety. FMCSA also acknowledges that different definitions of ''monocular vision'' are used in the literature. These limitations in studies relating to crash risk explain why the Agency elects to rely on its long experience with the vision waiver study and exemption programs as a basis for this rule in addition to the medical literature.

Further studies evaluating the impact of a vision deficiency in one eye on driving performance are unnecessary for the purposes of this rule. Considering the long period over which the vision waiver and exemption programs have operated, the Agency has sufficient information and experience to reach generalized conclusions. The experience with the programs has allowed FMCSA to evaluate the vision criteria used in the programs since 1992 and adopted in this rule in the context of actual CMV driving experience. Contrary to the implication by one commenter, FMCSA finds no basis for the assertion that the experience of drivers in the programs occurred in limited markets with less traffic.

FMCSA disagrees that the experience and safety determinations based on the vision waiver study and exemption programs cannot be applied to the alternative vision standard. To isolate the impact of a vision deficiency on driving, the Agency excluded drivers with a history of unsafe driving behaviors. After 30 years of experience with the vision waiver study and exemption programs, FMCSA finds it is reasonable to conclude that, if the vision deficiency had an adverse impact on the ability to operate a CMV, there would be observed evidence of that adverse impact over the long period, even though the individuals were generally safe drivers, experienced in driving with the vision deficiency, or monitored. FMCSA has no such evidence.

[6] The Curriculum Vitae submitted establishes Dr. Morris as an expert in the vision field (see *https://www.regulations.gov/comment/FMCSA-2019-0049-0087*).

[7] Although the study titled ''The Impact of Visual Field Loss on Driving Performance: Evidence from On-Road Driving Assessments'' referred to by a commenter generally supports the safety of monocular drivers, FMCSA does not rely on the study to support this rule due to the study's small sample size.

One commenter noted a finding in the November 2016 Analysis Brief that the crash rate of vision exemption drivers was statistically different and higher than the crash rate in the control group. As FMCSA explained in the NPRM, that finding is not cause for concern. The findings of the Analysis Brief represent a limited period and are subject to several limitations. In particular, the crash information did not consider whether the CMV driver was at fault in any given crash. Moreover, it is not possible to know whether visual function caused or contributed to the crash. FMCSA monitors the performance of individual drivers in the vision exemption program continuously. FMCSA has no evidence to suggest drivers in the exemption program are less safe than the general population of CMV drivers.

Another commenter stated that the August 1992 to November 1995 study found the accident rates of the waiver group and control group were significantly lower than that of the national rate. The commenter inferred that was because the wavier and control groups were monitored in some manner. The Agency clarifies that study did not include a control group. The comparison was of the accident rate in the waiver group to the national rate.

FMCSA disagrees that the alternative vision standard presents a ''loosening'' or ''reduction'' in vision standards. The Agency finds, as did Dr. Morris, that the requirements adopted are appropriate and will not adversely impact safely. The rule allows individuals who have developed the skills to adapt to and compensate for the vision loss to demonstrate that they also have the skills to operate a CMV safely. The rule includes safeguards to ensure that only individuals who have developed the skills to adapt to and compensate for the vision loss will be physically qualified.

As compared to the existing physical qualification process, individuals physically qualified under the alternative vision standard are subject to more stringent requirements. Individuals physically qualified under the existing vision standard undergo only a basic vision screening test performed by MEs at least once every 2 years. Individuals physically qualified under the alternative vision standard must undergo a thorough eye evaluation conducted by an ophthalmologist or optometrist using sophisticated equipment at least once a year. As discussed further below, the ophthalmologists and optometrists performing the evaluations are to provide their medical opinions regarding whether the individuals evaluated have adapted to and compensated for the change in vision such that they can drive a CMV safely with the vision deficiency. Moreover, individuals physically qualified under the alternative vision standard must undergo a physical qualification examination at least once a year.

As compared to the case-by-case determinations made in the exemption program, the alternative vision standard provides a consistent approach to medical certification of individuals who do not meet the existing vision standard. This approach of MEs making the physical qualification determination, instead of FMCSA, as in the exemption program, is consistent with Congress' directive in 49 U.S.C. 31149(d) for trained and certified MEs to assess the individual's health status.

C. The Two-Step Physical Qualification Process

NPRM: FMCSA proposed a two-step process for physical qualification under the alternative vision standard. First, an individual seeking physical qualification would obtain a vision evaluation from an ophthalmologist or optometrist who would record the findings and provide specific medical opinions on the proposed Vision Evaluation Report, Form MCSA–5871. Next, an ME would perform an examination and determine whether the individual meets the proposed vision standard, as well as FMCSA's other physical qualification standards.

Comments on the Two-Step Physical Qualification Process: Six commenters remarked favorably regarding the collaborative physical qualification process. Three stated the approach has worked well in the standard for insulin-treated diabetes mellitus. For example, one commenter who is an ME stated the alternative standard for insulin-treated diabetes mellitus, which involves a similar two-step process for physical qualification, has worked very well in practice. The commenter continued that the proposed changes to the vision standard would make the certification process easier for both MEs and drivers. Other commenters agreed that medical professionals should determine whether an individual meets the physical qualification standards. OOIDA stated that, as in the current Federal vision exemption program, the alternative vision standard still requires consultation with and approval from medical professionals, but it will eliminate time and paperwork burdens that are required under the exemption program.

MRB Task 21–1 Report: The MRB recommended that the Agency deemphasize that the alternative vision standard begins with the vision evaluation because the individual may be examined first by the ME.

Comments on *MRB Task 21–1 Report:* The American Optometric Association (AOA) supported the two-step process to physically qualify drivers and the requirement to have the first step be for the individual to seek an evaluation by an ophthalmologist or optometrist. It continued that ensuring all individuals are thoroughly evaluated by an expert in eye care is critical and the information and opinions should be carefully considered and respected. The AOA commented that ''Relying on the information provided by the doctor of optometry or ophthalmologist will be critical in evaluating potential drivers.''

ATA cautioned ''that deemphasizing the two-step process might result in additional burdens for a driver who would need to make multiple visits to a medical examiner.'' ATA emphasized that individuals who know they will be physically qualified under the alternative vision standard should see the vision specialist first. However, if a driver is evaluated by an ME first and subsequently referred to a vision specialist, that driver will have to return to the ME again. At the same time, ATA stated its concern that deemphasizing the two-step certification process would result in some individuals with a vision deficiency being wrongly issued medical certification because MEs are not vision specialists, so individuals should see an ophthalmologist or optometrist before the physical qualification examination.

Response: FMCSA agrees that the alternative vision standard would lessen the complexity of the medical certification process for individuals who do not meet the vision standard without an exemption. The similar streamlined approach for medical certification of individuals with insulin-treated diabetes mellitus has worked well and received positive acceptance from drivers and employers in the motor carrier industry. The collaborative physical qualification process in this final rule provides sufficient safeguards to ensure that only individuals who have adapted to and compensated for their vision deficiency will receive medical certification.

In response to the MRB's recommendation, FMCSA made changes to the terminology in this preamble to emphasize that a vision evaluation must be completed before an individual may be physically qualified under the alternative vision standard (see 49 CFR 391.44(b) and (c)). FMCSA uses ''collaborative'' to describe the process

without emphasizing which medical professional first assesses the individual.

For individuals who are aware they will be physically qualified under § 391.44, they begin the certification process by going to an ophthalmologist or optometrist for a vision evaluation. For some, however, the need for a vision evaluation will not be known until they fail to satisfy the existing vision standards at a physical qualification examination. In this situation, a second visit to an ME is unavoidable. Because MEs are not vision specialists, a visit to an ophthalmologist or optometrist is always necessary to ensure the individual's vision is evaluated sufficiently before an ME may issue a medical certificate that ensures the individual can operate a CMV safely. This process is no different from current practice for other conditions when an ME makes a request for a referral to or consultation with another appropriate healthcare provider.

Regardless of how an individual begins the certification process, an individual being evaluated under the alternative vision standard must have an eye evaluation by an ophthalmologist or optometrist to be medically certified. Therefore, there is no concern that deemphasizing the order of the certification process will result in some individuals with a vision deficiency being incorrectly certified as physically qualified. The Vision Evaluation Report, Form MCSA–5871, contains the information necessary for an ME to determine whether the individual satisfies the existing vision standard using more sophisticated testing equipment or requires certification under the alternative vision standard.

FMCSA emphasizes that the ME is to consider the information provided on the Vision Evaluation Report, Form MCSA–5871, but is to use independent medical judgment to evaluate the information and determine whether the individual meets the alternative vision standard. It is the ME who makes the physical qualification determination in the collaborative process.

D. The Role of Ophthalmologists and Optometrists

NPRM: FMCSA proposed that an individual seeking physical qualification under the alternative vision standard would obtain a vision evaluation from an ophthalmologist or optometrist who would record the findings and provide specific medical opinions on the proposed Vision Evaluation Report, Form MCSA–5871.

Comments on the Role of Ophthalmologists and Optometrists: Three commenters endorsed requiring an individual to be seen by an ophthalmologist or optometrist. Two other commenters, however, expressed concerns about allowing the individual to select the ophthalmologist or optometrist. One stated that having the evaluation by a doctor of an individual's choosing may be ineffective in proving whether an individual can operate a CMV with limited vision. The other commenter asked what would prevent a driver with recent loss of vision from ''doctor shopping'' until the driver finds an ophthalmologist or optometrist who is willing to state the driver has adjusted to the loss of vision. The commenter stated that FMCSA would have no way to be aware of drivers who doctor shop.

The same commenter remarked that the proposed process appears to be one that can be subjective, rather than objective like the regulation for individuals with insulin-treated diabetes mellitus that relies on numbers. The commenter noted a driver could simply report that the driver has adjusted to the partial vision loss when that may not be the case. The commenter asked if there could be direct numbers or procedures assigned to the driver's eye evaluation to prevent that from happening. In contrast, one commenter stated no doctor is going to sign off on a driver if the doctor knows a driver cannot drive in a safe manner.

MRB Task 21–1 Report: The MRB made five recommendations relating to the Vision Evaluation Report, Form MCSA–5871, that generally relate to the role of ophthalmologists or optometrists in the certification process. Those recommendations are discussed in detail in connection with the report and the relevant requirement in the alternative vision standard.

Response: FMCSA expects that ophthalmologists and optometrists will not complete the Vision Evaluation Report, Form MCSA–5871, unless they have reliable information on which to base their opinions, as stated by one commenter. Concerning the comments on drivers self-selecting ophthalmologists and optometrists and doctor shopping for favorable results, FMCSA anticipates that often the ophthalmologist or optometrist completing the report will have treated the individual seeking evaluation and have knowledge of the individual's vision medical history. However, the Agency is not requiring the ophthalmologist or optometrist completing the report to have provided medical treatment to the individual previously. If the ophthalmologist or optometrist does not have a previous relationship with an individual seeking evaluation, typical medical practice would be for the ophthalmologist or optometrist to request and review the individual's prior vision and medical records.

The Vision Evaluation Report, Form MCSA–5871, requests objective information that is the basis for the medical opinions rendered by the ophthalmologist or optometrist. The information is obtained through a vision evaluation that includes formal perimetry results for the field of vision and prior medical documentation. The Agency finds it unlikely an ophthalmologist or optometrist would merely accept an individual's statement that the individual has adapted to and compensated for the vision loss. Instead, the ophthalmologist or optometrist makes that determination based on multiple factors such as the clinical examination, test results, history of the cause and duration of the vision loss, and medical information regarding the time needed to adapt to and compensate for the vision loss based on all the relevant factors. In addition, ophthalmologists and optometrists completing the report must attest that the information provided is true and correct to the best of their knowledge.

E. Frequency of Vision Evaluations

NPRM: FMCSA proposed that individuals physically qualified under the alternative vision standard would have vision evaluations by an ophthalmologist or optometrist before each annual or more frequent physical qualification examination by an ME.

Comments on the Frequency of Vision Evaluations: Dr. Morris, a board-certified retina surgeon and ophthalmologist, encouraged FMCSA, ''without any reservation,'' to adopt the alternative vision standard. Another commenter agreed that vision evaluations should be completed at least yearly. A different commenter, an ME, stated the MRB recommended that FMCSA seek comments from ophthalmologists, optometrists, or their professional associations regarding the frequency of evaluation because there are many different eye conditions and they could be fixed or progressive.

MRB Task 21–1 Report: The MRB did not recommend a change to the frequency of vision evaluations; therefore, the MRB concurred with the frequency of vision evaluations as proposed.

Response: FMCSA continues to find that at least annual vision evaluations are appropriate for individuals physically qualified under the alternative vision standard. The Vision Evaluation Report, Form MCSA–5871,

asks ophthalmologists and optometrists to provide an opinion on whether a vision evaluation is required more often than annually for the individual evaluated. If so, they are to state how often a vision evaluation should be required. In addition, the ME performing the physical qualification examination may exercise medical discretion, based on the findings of the examination and driver health history, and require an eye evaluation more often than annually by medically certifying the individual for less than the maximum 12-month period. Finally, ophthalmologists, optometrists, and their professional associations had the opportunity to submit comments on this issue in response to the NPRM.

F. Vision Evaluation Report, Form MCSA–5871

NPRM: FMCSA proposed that an ophthalmologist or optometrist would record the findings from the vision evaluation and provide specific medical opinions on the Vision Evaluation Report, Form MCSA–5871. The report would be provided to and considered by the ME in making a qualification determination.

Comments on the Vision Evaluation Report, Form MCSA–5871: No comments were received on the substance or format of the report. ACOEM commented, however, that the MRB recommended in September 2015 that, if the vision standard is changed, a form should be designed to be completed by the ophthalmologist or optometrist that includes all the information required by the current vision exemption program, which could then be reviewed by the ME. Another commenter, an ME, stated similarly that FMCSA should seek comment from professional associations for ophthalmologists or optometrists regarding comorbid conditions, disease processes, and any other additional helpful information.

MRB Task 21–1 Report: In the first of five recommendations for the Vision Evaluation Report, Form MCSA–5871, the MRB recommended that the physical qualification standards for the alternative vision standard (modified to reflect a field of vision of at least 120 degrees) be added to page 1 after FMCSA's definition of monocular vision as information for the ophthalmologist or optometrist.

The second recommendation was to expand the medical opinion for question 12, regarding sufficient time to adapt and compensate for the change in vision, to require that the individual can drive a CMV safely with the vision condition. The MRB noted that the medical opinion regarding whether the individual has adapted to and compensated for the change in vision sufficiently encompasses depth perception. The MRB further noted that question 12 sufficiently implies that time is needed to adapt and compensate for the change in vision, but appropriately relies on the ophthalmologist or optometrist conducting the vision evaluation to determine the appropriate period of time on a case-by-case basis.

The remainder of the MRB recommendations, three through five, concerned the order of questions and the necessity of certain questions. The MRB recommended the information about stability in questions 11 (vision deficiency) and 13 (progressive eye conditions) be retained because the questions solicit different information. The MRB recommended the Agency change the order of the requested information to be questions 1 through 9, 10, 12, 13, and then 11. This would place the question concerning stability of the vision deficiency (question 11) after the question about progressive eye diseases (question 13). Finally, the MRB recommended the Agency not request information on the report relating to severe non-proliferative diabetic retinopathy and proliferative diabetic retinopathy because they are evaluated separately under the standard for insulin-treated diabetes mellitus.

Response: With respect to ACOEM and the ME's comments to the NPRM, FMCSA followed the MRB's September 2015 recommendations and developed a form for ophthalmologists and optometrists to complete that is provided to MEs. The Vision Evaluation Report, Form MCSA–5871, is based on the September 2015 recommendations and information obtained in the current vision exemption program. It includes requests for information about progressive eye conditions. A summary of the proposed report was included in the NPRM, and a draft of the report was available in the rulemaking docket. The NPRM afforded the opportunity for all interested parties, including eye professionals and their organizations, to provide comment on the proposed rule and report.

The final Vision Evaluation Report, Form MCSA–5871, includes the alternative vision standards on page 1 as requested by the MRB. However, FMCSA does not modify the vision standards to reflect a field of vision of at least 120 degrees for the reasons discussed below.

FMCSA agrees with the MRB that reordering the medical opinions and information about progressive eye conditions improves the report. Accordingly, FMCSA inserts the question about progressive eye conditions before the medical opinions. That move consolidates all the vision information before the medical opinions are provided. Question 11, which provides the medical opinion concerning whether the vision deficiency is stable, follows the question about progressive eye conditions as the MRB recommended. FMCSA does not place the medical opinion about stability of the vision deficiency after the other medical opinions, however. The alternative vision standard requires that the vision deficiency must be stable first, and then there must be time to adapt and compensate for the vision change. As recommended, FMCSA expands question 12, regarding adapting to and compensating for the vision deficiency, to include that the individual can drive the CMV safely.

FMCSA agrees with the MRB's recommendation and rationale regarding not to include questions concerning severe non-proliferative and proliferative diabetic retinopathy on the report. These conditions are covered by the separate standard for insulin-treated diabetes mellitus.

The final Vision Evaluation Report, Form MCSA–5871, is available in the docket for this rulemaking. The Agency invites public comment on the report under the Paperwork Reduction Act as provided in the information collection, titled ''Medical Qualification Requirements,'' discussed in section X.F. below. Comments should be submitted to OIRA at OMB as provided in the **ADDRESSES** section above.

G. The Role of MEs

NPRM: FMCSA proposed that, at least annually, but no later than 45 days after an ophthalmologist or optometrist signs and dates the Vision Evaluation Report, Form MCSA–5871, an ME would conduct a physical qualification examination and determine whether the individual meets the alternative vision standard, as well as the other physical qualification standards.

Comments on the Role of MEs: A commenter stated one safeguard in the alternative vision standard is that determinations regarding whether an individual can operate a CMV safely will be made by an ME, a licensed healthcare professional, instead of an FMCSA employee. In contrast, ACOEM stated the proposed standard would shift considerable responsibility to the ME who may not have the training or experience to adequately assess the vision deficiency. An ME commented that the ME would refuse to examine

any drivers who fall within the proposed alternative vision standard ''for the sake of the driving public and as a personal liability concern.''

MRB Task 21–1 Report: The MRB did not recommend a change with respect to the role of the ME in the proposed alternative vision standard; therefore, the MRB concurred with the role of the ME as proposed.

Response: FMCSA disagrees that under the alternative vision standard more responsibility or liability is shifted to MEs for which they are not trained or have experience. FMCSA has determined that MEs are qualified to perform their role in this collaborative medical certification process and to perform physical qualification examinations on all individuals, including those with vision deficiencies. The role of the ophthalmologist or optometrist is to provide relevant information and medical opinions regarding the individual's vision status to assist the ME to determine whether the individual meets the alternative vision standard. The role and responsibility of the ME, who is licensed by a State authority to perform physical examinations and is trained in FMCSA's physical qualification standards and the demands of operating a CMV, is to exercise independent medical judgment to medically certify that the individual can safely operate a CMV. The ME's role with the alternative vision standard is consistent with current practice for any medical condition for which the ME considers additional information to reach a medical certification determination.

MEs have proven experience making medical certification determinations. This approach of MEs making the physical qualification determination is consistent with Congress' directive in 49 U.S.C. 31149(d) for trained and certified MEs to determine the individual's physical qualification to operate a CMV.

If an ME determines that additional information is necessary to make the certification determination, the ME could confer with the ophthalmologist or the optometrist for more information on the individual's vision medical history and current status, make requests for other appropriate referrals, or request medical records from the individual's treating provider, all with the appropriate consent. MEs routinely confer with and obtain opinions from treating providers concerning the stability of individuals' underlying medical conditions and how the medical conditions may impact safety.

H. Frequency of Physical Qualification Examinations and Maximum Period of Certification

NPRM: FMCSA proposed that individuals medically certified under the alternative vision standard have physical qualification examinations at least every 12 months and be medically certified for a maximum period of 12 months.

Comments on the Frequency of Physical Qualification Examinations and Maximum Period of Certification: A commenter stated the 12-month maximum certification period is a safeguard that ensures an individual will be re-evaluated in a year to determine continued eligibility for CMV driving. One commenter, an ME, stated that the MRB recommended certification for 1 year if FMCSA develops an alternative vision standard. Another commenter who also is an ME noted that FMCSA issues vision exemptions for 2 years. The commenter asked if individuals designated as legally blind could be medically certified for 2 years because their vision is not going to change.

MRB Task 21–1 Report: The MRB did not recommend a change with respect to the frequency of physical qualification examinations or maximum period of certification; therefore, the MRB concurred with the requirement for physical qualification examinations at least every 12 months and certification for a maximum of 12 months.

Response: FMCSA continues to find it appropriate for individuals medically certified under the alternative vision standard to have physical qualification examinations at least every 12 months and to be medically certified for a maximum of 12 months. The Agency agrees with the first commenter cited above that the 12-month maximum certification period is a safeguard that allows for early detection and consideration of conditions that may impact an individual's ability to safely operate a CMV.

FMCSA continues to conclude, as stated in the NPRM, that even individuals who have a non-functional eye or have lost an eye must undergo vision evaluations at least annually. It is important to monitor compliance with the vision standard in the unaffected eye because of the potential for vision changes in that eye (86 FR 2358). Accordingly, at least annual physical qualification examinations are appropriate for individuals designated as legally blind in one eye. Although Federal vision exemptions are issued for 2 years, individuals undergo a vision evaluation and a physical qualification examination at least annually. The maximum certification period is 12 months for an individual with a vision exemption. Thus, the approach in the alternative vision standard is consistent with the vision exemption program.

If an ME determines an individual merits closer monitoring, the ME may certify the individual for less than the maximum 12-month period. This approach allows the ME to exercise medical discretion as necessary in making individualized medical certification determinations.

I. Individuals Eligible for the Alternative Vision Standard

NPRM: FMCSA proposed that the physical qualification standard for vision would be satisfied if an individual meets the requirements of the existing vision standard or the requirements of the alternative vision standard in § 391.44. Section 391.44 proposed an alternative vision standard for an individual ''who cannot satisfy either the distant visual acuity or field of vision standard, or both,'' in the existing vision standard in one eye. On the Vision Evaluation Report, Form MCSA–5871, FMCSA defined monocular vision ''as (1) in the better eye, distant visual acuity of at least 20/40 (with or without corrective lenses) and field of vision of at least 70 degrees in the horizontal meridian, and (2) in the worse eye, either distant visual acuity of less than 20/40 (with or without corrective lenses) or field of vision of less than 70 degrees in the horizontal meridian, or both.''

Comments on Individuals Eligible for the Alternative Vision Standard: ACOEM stated that the proposed alternative vision standard goes beyond the scope of the current vision exemption program. ACOEM commented that the current exemption program is only applicable to drivers whose best corrected vision in their worse eye prevents them from meeting the vision standard. The proposed alternative vision standard, however, seems to allow any driver to meet the vision standard if vision in one eye is at least 20/40 with or without corrective lenses. This would permit a driver who chooses not to obtain corrective lenses to use the proposed standard if the driver's vision in the better eye meets the existing vision standard. ACOEM continued, ''True monocular vision is defined by medical professionals as vision with only one eye whether it be due to functional loss or physical loss of the eye.'' However, the alternative vision standard would apply to a driver who simply does not meet the existing visual acuity requirements and does not

specify whether due to a long-term condition, surgery, or just normal vision changes. Concentra made a similar comment. Both ACOEM and Concentra commented that the proposed alternative vision standard would permit having one eye corrected to distant vision and the other corrected for near vision.

MRB Task 21–1 Report: The MRB did not recommend a change with respect to eligibility for the alternative vision standard; therefore, the MRB concurred with the alternative standard as proposed in this regard.

Response: FMCSA clarifies in this final rule that only individuals who do not satisfy, with the worse eye, either the distant visual acuity standard with corrective lenses or the field of vision standard, or both, in the existing vision standard are eligible to be physically qualified under the alternative vision standard. FMCSA changes the regulatory text and definition of monocular vision on the Vision Evaluation Report, Form MCSA–5871, accordingly. Individuals who choose not to obtain corrective lenses for the worse eye when the better eye meets the existing vision standard must not be physically qualified under § 391.44. It was not the Agency's intent to change the scope of the current vision exemption program in this regard or to allow individuals who simply need corrective lenses to be physically qualified under the alternative vision standard. The Agency elects to optimize overall safety on our roadways by requiring individuals to satisfy the existing vision standard when they are able to do so with the use of corrective lenses. Moreover, FMCSA assumes that individuals will make the rational decision to improve their vision if it is less burdensome than incurring the additional expense of annual eye evaluations and physical qualification examinations.

The alternative vision standard is not an option for an individual who can meet the existing vision standard with correction. The Vision Evaluation Report, Form MCSA–5871, specifically questions whether the individual has corrected or uncorrected vision, and whether the correction is by glasses or contacts. An ME who receives and reviews a Vision Evaluation Report, Form MCSA–5871, and detects the individual in each eye meets the minimum visual acuity standard of 20/40 with correction, has a field of vision of 70 degrees, and is able to recognize the standard red, green, and amber traffic control signal colors, should inform the individual that medical certification under the alternative vision standard is not applicable.

Under FMCSA's existing vision standard, it is permissible for an individual to have one eye corrected to distant vision and the other corrected for near vision if each eye meets the existing visual acuity standard. If one eye does not meet the visual acuity standard, the individual must obtain and wear corrective lenses that enable the individual to satisfy the visual acuity standard in each eye while operating a CMV.

J. Acceptable Field of Vision

NPRM: FMCSA proposed that an individual must have, in the better eye, field of vision of at least 70 degrees in the horizontal meridian to be physically qualified under the alternative vision standard. The Agency stated in the NPRM that it was ''not proposing changes to the current vision standard found in § 391.41(b)(10)'' (86 FR 2358).

Comments on Acceptable Field of Vision: Dr. Morris, a board-certified retina surgeon and ophthalmologist, encouraged FMCSA, ''without any reservation,'' to adopt the alternative vision standard as proposed. Dr. Morris indicated that if an individual meets the proposed vision standard there will be no adverse impact on safety due to the individual's vision, and that the loss of vision is not likely to play a significant role in whether the individual can drive a CMV safely. A commenter, who holds a Federal vision exemption, stated that when an individual has reduced vision in one eye the peripheral field sharpens over time. Another commenter also noted an improvement in the field of vision due to compensation when compared to before the vision loss.

Concentra and ACOEM commented that the existing vision standard considers 70 degrees in the horizontal meridian in each eye to be sufficient; however, normal field of vision is twice that, *i.e.,* 50 degrees nasally and 90 degrees temporally for a total of 140 degrees. Concentra noted pilots are required to have normal field of vision. It recommended that 120 degrees bilaterally be considered the minimum acceptable standard for § 391.41, and that drivers not meeting that standard should be disqualified. Concentra continued that ''Depending on the cause of the vision deficit, perhaps the driver could be eligible for an exemption under either the current exemption program or the proposed § 391.44.'' ACOEM stated that the field of vision standard has long been an area of controversy and that this rule would be an appropriate time to address the field of vision standard. It noted the MRB previously recommended that a 120-degree field of vision be adopted.[8]

Concentra provided diagrams that it states demonstrate a driver with 70 degrees of horizontal field of vision has a markedly decreased field of vision. Concentra continued that a ''field of vision limited to 70 degrees is not normal vision and if detected on an examination, is reason to have a comprehensive evaluation by a specialist.'' ACOEM noted the proposed rule would allow a quarter of a normal visual field to meet the standard. Both Concentra and ACOEM commented than any discussion of field of vision should specify if it is from nasal, temporal, or total.

A commenter stated that FMCSA needs to seek comment from eye specialists and professional associations regarding field of vision criteria, which is not supposed to be 70 degrees as stated in the existing vision standard.

MRB Task 21–1 Report: The MRB recommended that the field of vision requirement be changed from 70 degrees to 120 degrees for the alternative vision standard.

Comments on MRB Task 21–1 Report: The AOA supported the MRB's recommendation. The AOA commented that ''Using 120 degrees in the horizontal meridian as a requirement would create greater consistency with recognized driving standards.'' ATA noted Concentra and Dr. Morris supported a 120-degree field of vision instead of the proposed 70 degrees. ATA stated that it supports ''efforts to maintain a stringent vision standard for commercial drivers and believes that the MRB recommendation to increase the required [field of vision] and the required evaluation from a vision specialist accomplishes this goal.''

In contrast, an ME commenter recommended keeping the 70-degree peripheral vision requirement. A different commenter asked if there have been any studies showing that drivers with a wider field of vision have fewer accidents. The commenter continued ''If not, then leave things alone,'' especially when there is no evidence that drivers with a narrower field of vision are more dangerous on the road.

Response: The Agency has long considered 70 degrees in the horizontal meridian in each eye to be the sufficient minimum standard for field of vision. As stated above, the NPRM did not propose changes to the field of vision requirement for the existing vision

[8] FMCSA Medical Review Board, Meeting Summary, Oct. 19, 2012, available at *https://www.fmcsa.dot.gov/sites/fmcsa.dot.gov/files/docs/October_2012_Certified_Meeting_Summary.pdf* (last accessed Aug. 17, 2021).

standard. Accordingly, the comments recommending changes to the existing vision standard are out of the scope of this rulemaking and will not be addressed here.

Dr. Morris concluded, as has FMCSA, that if an individual meets the proposed vision standard there will be no adverse impact on safety due to the individual's vision. Contrary to ATA's interpretation, Dr. Morris did not support a 120-degree field of vision for the alternative vision standard. Dr. Morris noted only that his patient has field of vision of 120 degrees in the horizontal meridian.

The alternative vision standard adopts the major vision criteria of the current Federal vision exemption program, which were also used in the preceding Federal vision waiver study program since the early 1990s. Under the current vision exemption program, FMCSA considers exemptions for those individuals who have a field of vision of at least 70 degrees in the horizontal meridian in the better eye. An ophthalmologist or optometrist must conduct formal perimetry to assess the field of vision of each eye, including central and peripheral fields, utilizing a testing modality that tests to at least 120 degrees in the horizontal meridian. The ophthalmologist or optometrist must submit the formal perimetry for each eye and interpret the results in degrees of field of vision. The Vision Evaluation Report, Form MCSA–5871, includes the same requirements for testing and formal perimetry. The report also requires a medical opinion from the ophthalmologist or optometrist regarding whether the individual has adapted to and compensated for the change in vision and can drive a CMV safely.

Commenters did not provide in response to the NPRM or NOA any new data that shows drivers with a horizontal field of vision of 70 degrees in the better eye are less safe than drivers with a field of vision of 120 degrees. The Agency has nearly 30 years of experience with drivers who have been physically qualified under the vision waiver study and the exemption programs with a field of vision of at least 70 degrees. Based on that experience, which has not revealed concerns regarding a horizontal field of vision of 70 degrees in the better eye, FMCSA has determined that individuals who meet the alternative vision standard will be at least as safe as the general population of CMV drivers.

K. Meaning of Stable Vision

NPRM: FMCSA proposed that an individual is not physically qualified under the alternative vision standard to operate a CMV ''if the individual's vision deficiency is not stable.'' FMCSA did not propose a definition for what constitutes stable vision.

Comments on the Meaning of Stable Vision: Concentra commented that the ''term 'stable' is too broad and is guaranteed to cause controversy and confusion.'' Similarly, ACOEM asked how stable would be defined. ACOEM also asked if a modest change in vision in the worse eye over a 5- to 10-year period would be considered stable. Concentra asked FMCSA to consider the driver who needs new corrective lenses every 2 to 3 years to even reach 20/40 in the worse eye. Concentra and ACOEM both asked if any progressive eye diseases should ever be considered stable. They commented that, not only will eye care professionals have different opinions on stability, but many MEs will not have sufficient knowledge of vision disorders to evaluate whether an eye disorder is stable or progressive. They stated that removing the 3-year driving experience requirement will only amplify this issue.

MRB Task 21–1 Report: The MRB did not recommend a change with respect to the meaning of stable vision; therefore, the MRB concurred with the alternative vision standard in this regard. As noted above with respect to the Vision Evaluation Report, Form MCSA–5871, the MRB recommended the questions about stability of the vision deficiency and progressive eye conditions be retained because the questions solicit different information.

Comment on the MRB Task 21–1 Report: The AOA stated the MRB noted that the medical opinion provided by the ophthalmologist or optometrist must be respected regarding whether the individual has stable vision deficiency.

Response: FMCSA declines to incorporate a specific definition of *stable vision* in the final rule that applies to all individuals who are physically qualified under the alternative vision standard. Instead, ophthalmologists and optometrists who are trained to evaluate vision and know what constitutes stable vision are to provide medical opinions regarding when an individual's vision is stable.

However, FMCSA changes the Vision Evaluation Report, Form MCSA–5871, by adding a question after the ophthalmologist or optometrist provides an opinion regarding whether the individual's vision deficiency is stable. It asks, ''If yes, when did the vision deficiency become stable?'' With respect to progressive eye conditions, FMCSA also adds a request for additional information if the condition is not stable. These changes provide additional information for the ME to independently assess whether the individual's vision is stable.

Determining when vision is stable requires an individualized assessment. Many variables, such as the nature, severity, and duration of the underlying medical condition or vision deficiency, treatment, and response to treatment, influence when an ophthalmologist or optometrist deems vision to be stable for both progressive and fixed vision deficiencies. Therefore, the Agency finds that whether an individual has stable vision is a clinical rather than a regulatory determination and most appropriately defined for the individual by healthcare professionals.

FMCSA does not expect MEs will make unassisted or uninformed vision qualification determinations, as indicated by commenters. The alternative vision standard emphasizes the separate but collaborative roles of ophthalmologists or optometrists and MEs in the medical certification process. Specifically, the ophthalmologist or the optometrist performs a vision evaluation and completes the required Vision Evaluation Report, Form MCSA–5871, based on the clinical findings of the evaluation of the individual and knowledge of the individual's medical history. The report provides the relevant information and medical opinions for the ME to consider when making the final physical qualification determination. The MRB did not state that the medical opinions provided by ophthalmologists and optometrists must be respected. FMCSA emphasizes that the final determination rests with the ME regarding whether the individual meets the alternative vision standard.

L. Elimination of the Exemption Program's 3-Year Driving Experience Criterion

NPRM: FMCSA stated the 3 years of intrastate driving experience with the vision deficiency criterion in the vision exemption program has been equated to sufficient time for the driver to adapt to and compensate for the change in vision. Rather than continuing the criterion, FMCSA proposed for the alternative vision standard that an individual is not physically qualified to operate a CMV ''if there has not been sufficient time to allow the individual to adapt to and compensate for the change in vision.'' FMCSA did not propose a minimum period for the time to adapt to and compensate for the change in vision. Instead, the medical professionals would determine when an individual has adapted to and compensated for a change in vision

based on an individualized assessment of all the relevant factors. As an alternative to the driving experience criterion, FMCSA proposed that individuals physically qualified for the first time ever under the alternative vision standard must satisfactorily complete a road test before operating in interstate commerce, with limited exceptions.

Comments on Elimination of the Exemption Program's 3-Year Driving Experience Criterion: Dr. Morris, a board-certified retina surgeon and ophthalmologist, encouraged that the alternative vision standard be adopted as proposed. Dr. Morris stated, ''As a retina surgeon, it is well recognized in medical journals that individuals who have experienced a vision loss in one eye can and usually develop compensatory viewing behavior to mitigate the vision loss. My experience in treating patients with the loss of vision in one eye is that these individuals, over time, are not limited by their lack of binocularity with respect to driving once they have adapted to and compensated for the change in vision.''

OOIDA stated the prolonged period of required intrastate driving can discourage drivers from staying in the industry. OOIDA commented that the alternative vision standard ''ensures sufficient physical qualifications are met, but also establishes a more practical process that will help safe drivers continue to operate in the trucking industry.''

A commenter noted that not adopting the alternative vision standard would prolong the process for previously qualified interstate CMV drivers who are no longer able to meet the existing vision standard to return to driving. The commenter also stated the rule would reduce barriers of entry. Another commenter supported the alternative vision standard but emphasized that adequate depth perception is key to avoiding collisions. The commenter continued that under the new standard an individual's depth perception should be assessed first and foremost.

ATA stated it strongly opposed replacing the vision exemption program's criterion of 3 years of driving experience with the road test required in § 391.31. ATA strongly objected to FMCSA's use of vision exemption program data without factoring in the safety implications of removing essential safeguards of the program. ATA also strongly disagreed with FMCSA's assessment that, by eliminating the intrastate CMV experience requirement and replacing it with the mandated road test in § 391.31, the alternative vision standard could increase the number of drivers entering the industry without adversely impacting safety. ATA stated that, regardless of age, years of experience consistently equates to lower rates of crashes, crash involvements, and moving violations, which are factors that were overlooked in the NPRM.

ACOEM commented that the ''current requirement for 3 years of commercial driving experience with the vision deficiency would allow the individual with a vision impairment a period of time under which they could adjust to the vision deficit.'' ACOEM and Concentra stated that a simple road test is insufficient evaluation for drivers lacking experience operating CMVs. They stated further that the ''presently available data regarding the safety of drivers with monocular vision is inconclusive.'' They referred to statements in the NPRM that noted crash data on drivers with monocular vision is sparse and conflicting, and cautioned on interpreting data because ''monocular vision'' is defined differently in the literature. ACOEM and Concentra concluded that these observations ''actually support maintaining the requirement for experience over a road test.''

One commenter who is an ME stated FMCSA should retain the 3-year driving experience criterion. Another commenter stated the 3-year driving experience criterion should be kept as a minimum, but that time should be compared with ME reports and driving logs and records for increased safety. A different commenter stated that the 3 years of driving experience does a better job of proving that an individual can safely operate a vehicle than a simple test would.

Another commenter, who noted a modification of the existing standard is needed, stated a one-time test may not be sufficient to balance road safety, but that does not necessarily imply that the current 3-year driving criterion should stay in place. The commenter continued that the alternative vision standard must take into account a reasonable standard time period for individuals to demonstrate their abilities.

ATA, ACOEM, and Concentra commented generally that establishing an alternative vision standard contradicts the MRB's advice, which they stated consistently supported continuing the existing vision standards and current exemption program. It was noted that the MRB raised concerns that data suggest drivers who suffer traumatic eye loss often need time to adjust to their condition and recommended that FMCSA seek comment from eye specialists on the minimum amount of time for individuals to return to CMV driving after a sudden change in binocular vision. The commenters also stated the MRB recommended that FMCSA should investigate whether the 3-year driving experience criterion could be shortened.

ATA stated, while the alternative standard includes a requirement that individuals are not physically qualified to operate a CMV if there has not been sufficient time to allow the individual to adapt to and compensate for the change in vision, the requirement does not entirely address the MRB's recommendation that a period of adjustment is necessary after a sudden loss of vision. ATA stated further that the NPRM fails to sufficiently address why the Agency moved forward with a revision against the MRB's support to maintain the status quo.

MRB Task 21–1 Report: The MRB stated generally that with respect to the medical aspects of the proposed alternative vision standard, if the MRB did not make a specific recommendation to change a provision, the MRB concurred with the provision as proposed in the January 2021 NPRM. ''The MRB agree[d] that the requirement for sufficient time to adapt to and compensate for the vision deficiency should not be changed in the proposed alternative vision standard. The MRB note[d] it [did] not have sufficient data to establish a specific waiting period for an individual who has a new vision deficiency.''

With respect to the Vision Evaluation Report, Form MCSA–5871, the MRB noted that ''the medical opinion provided by the ophthalmologist or optometrist regarding whether the individual has adapted to and compensated for the change in vision sufficiently encompasses depth perception.'' The MRB continued that the requested medical opinion ''sufficiently implies that time is needed to adapt and compensate for the change in vision but appropriately relies on the ophthalmologist or optometrist conducting the vision evaluation to determine the appropriate period of time on a case-by-case basis.'' The MRB recommended, however, that FMCSA expand the medical opinion ''to require that the individual can drive a CMV safely with the vision condition.''

Comments on MRB Task 21–1 Report: The AOA commented that it supports the MRB's recommendation that the ophthalmologist or optometrist conducting the vision evaluation should ''independently determine'' the appropriate period needed to adapt on a case-by-case basis. It also stated that

the MRB noted the medical opinions provided by the ophthalmologist or optometrist ''must be respected'' regarding whether the individual has adapted to and compensated for the change in vision. Finally, the AOA commented that considerations may come into play when determining vision issues that can hinder driving beyond monocular Snellen visual acuity, horizontal visual fields, and color testing, which include inferior, superior, and central field visual assessment; contrast sensitivity assessment; visual processing assessments; and eye and systemic disease assessments.

ATA commented that it understands it is difficult to establish a standardized waiting period for adjustment. Nevertheless, ATA expressed concern ''that without any guidance, there will be an inconsistency in the certification of a driver depending on the judgement of his or her optometrist, ophthalmologist, or medical examiner.'' ATA stated FMCSA ''should seek to gather more data and establish clearer guidance on when a medical examiner can assure that a driver has sufficiently adapted to their vision deficiency.''

Response: FMCSA has fully factored in the safety implications of not continuing the 3 years of intrastate driving experience criterion in the alternative vision standard. FMCSA continues to find that once an individual has adapted to and compensated for the loss of vision in one eye the individual has the visual capacity to operate a CMV safely. While most drivers benefit from practice and experience, the Agency finds there is no persuasive evidence that supports continuing to hold individuals physically qualified under the alternative vision standard to the higher standard of driving in intrastate commerce after they have adapted to and compensated for the vision loss. The alternative vision standard with its collaborative physical qualification approach and one-time road test ensures drivers are visually capable of driving a CMV safely before they operate a CMV in interstate commerce.

As stated in the NPRM, and affirmed by Dr. Morris, it is well recognized in the medical literature that individuals with vision loss in one eye can and do develop compensatory viewing behavior to mitigate the vision loss. The 30 years of experience with the vision waiver study and exemption programs has shown that individuals with vision loss in one eye are not limited by their lack of binocularity with respect to driving once they have adapted to and compensated for the change in vision. Dr. Morris has had similar experience with drivers with vision loss in one eye.

The medical literature also shows the time needed to adapt to and compensate for the loss of vision in one eye varies. FMCSA noted in the NPRM that when the criterion was selected in the 1990s the medical community indicated it can take several months to a full year to compensate for a vision impairment (86 FR 2356). FMCSA cited a 2002 study that found the time to adapt to sudden vision loss was 8.8 months and to adapt to gradual vision loss was 3.6 months (86 FR 2357). Thus, the 3 years of intrastate driving experience criterion far exceeds the findings of the medical community that it can take up to a year to adapt to and compensate for vision loss in one eye. In the alternative vision standard, the additional time after a vision deficiency becomes stable provides the period of adjustment needed to adapt to and compensate for the vision loss.

It is no longer necessary to discuss the previous MRB recommendations because it has made new recommendations. In MRB Task 21–1 Report, the MRB accepted moving ahead with the alternative vision standard without the 3 years of driving experience criterion. The MRB agreed with FMCSA's approach of not requiring a minimum period to adapt to and compensate for the loss of vision in one eye. The MRB indicated the time varies by individual and stated it did not have data to establish a specific waiting period. Thus, as the MRB stated, the alternative vision standard ''appropriately relies'' on the ophthalmologist or optometrist conducting the vision evaluation, which includes a thorough evaluation of depth perception, to determine on a case-by-case basis when an individual has adapted to and compensated for the loss of vision in one eye. It is therefore appropriate that there be inconsistency in the time intervals it takes to adapt to and compensate for the loss of vision in one eye. Because the time needed to adapt to and compensate for a loss of vision is highly dependent on individual factors, gathering more data and attempting to establish clearer guidance is not necessary or feasible.

FMCSA finds a change to the alternative vision standard requirements will help to clarify that there must be a period for the individual to adapt to and compensate for the vision loss after the vision deficiency is deemed stable by a medical professional. Accordingly, FMCSA changes § 391.44(c)(2)(iv) to read, ''The individual is not physically qualified to operate a commercial motor vehicle if sufficient time has not passed since the vision deficiency became stable to allow the individual to adapt to and compensate for the change in vision.'' FMCSA also makes conforming changes in the Vision Evaluation Report, Form MCSA–5871, to the medical opinion regarding whether the individual has adapted to and compensated for the change in vision.

In response to the AOA comments that it supports the ophthalmologist or optometrist ''independently determining'' the appropriate period of time needed to adapt and that such a determination ''must be respected,'' FMCSA clarifies that the MRB noted only that question 12 sufficiently implies that time is needed to adapt to and compensate for the change in vision. FMCSA does not expect the ophthalmologist or optometrist conducting the vision evaluation to independently determine the appropriate period of time to adapt to or compensate for the vision loss or to determine whether an individual meets the relevant standard. Rather, as the MRB indicated, it expects the ME to appropriately rely on all the information provided by the ophthalmologist or optometrist to make the final determination of whether the individual meets the alternative vision standard and should be physically qualified.

FMCSA further revises question 12 to incorporate the MRB's recommendation to expand the medical opinion provided by the ophthalmologist or optometrist to require that the individual can drive a CMV safely with the vision condition. FMCSA also adds a request in the report to provide the month and year the vision deficiency became stable. The additional information could assist MEs to evaluate whether the period over which the individual adapted to and compensated for the change in vision seems reasonable.

The Vision Evaluation Report, Form MCSA–5871, requests the information MEs need to determine whether an individual meets the alternative vision standard. The specific requirements of the alternative vision standard are provided on the report for the informational awareness of ophthalmologists and optometrists conducting the vision evaluations. While there may be multiple ways to evaluate vision, FMCSA expects ophthalmologists and optometrists to provide the information as requested on the report, which requires an evaluation of visual acuity measured in terms of the Snellen chart and field of vision measured in the horizontal meridian, for example.

Comments relating to the safety of drivers in the vision waiver study and

exemption programs, as well as drivers with monocular vision generally, and the data used to support this rulemaking are discussed above. Comments relating to specific aspects of the road test are discussed below.

M. Road Test Requirement for Alternative Vision Standard

NPRM: FMCSA proposed that, instead of requiring 3 years of intrastate driving experience with the vision deficiency as in the current exemption program, individuals physically qualified under the proposed alternative vision standard for the first time would complete a road test before operating in interstate commerce. Individuals would be excepted from the road test requirement if they have 3 years of intrastate or specific excepted interstate CMV driving experience with the vision deficiency, hold a valid Federal vision exemption, or are medically certified under 49 CFR 391.64(b). These individuals have already demonstrated they can operate a CMV safely with the vision deficiency. Motor carriers would conduct the road test in accordance with the road test already required by 49 CFR 391.31.

1. Need To Separate the Physical Qualification Process From Driving Skill

Comments on the Need to Separate the Physical Qualification Process from Driving Skill: ATA stated it ''strongly believes FMCSA must separate the process of evaluating an individual's skill level in operating specific CMV equipment and physical qualification status.'' ATA stated that ''separation would help ensure certified medical experts are the ones making medical certification determinations, and not motor carriers.''

Response: The commenter's characterization of the process for enabling drivers with a vision deficiency to operate a CMV is mistaken. The road test conducted by the employer is separate from the physical qualification determination made by the ME. Employers are not making the medical certification determination by conducting a road test, but are making the same type of determination that is already required that an employee can operate a CMV safely. As stated in the NPRM, ''individuals physically qualified under the alternative vision standard for the first time must successfully complete a road test before operating a CMV in interstate commerce. The road test would demonstrate individuals are able to operate a CMV safely with the vision deficiency'' (86 FR 2359). The individual has been physically qualified by the ME and FMCSA expects there will be no adverse impact on safety due to the individual's vision. However, by requiring a road test, FMCSA takes an additional step to ensure that, even though medically certified, the individual can operate a CMV safely. The Agency anticipates the road test will alleviate any concerns about employing a driver with a vision deficiency because the test provides the opportunity to assess the driver's actual ability to operate a CMV safely.

The road test requirement in § 391.31 has been a long-standing provision that was adopted in 1970 to promote CMV safety by ensuring that drivers have demonstrated their skill and knowledge (35 FR 6458, 6459 (Apr. 22, 1970)). This road test requirement (or the equivalent skills test for commercial driver's license (CDL) drivers, see 49 CFR 391.33(a)(1)) is an important aspect of the employer's obligation to ensure that drivers they employ can operate a CMV safely, such as pre-employment record checks (49 CFR 391.23(a) and (d)) and the annual review of a drivers safety performance (49 CFR 391.25).

The employer, rather than the ME, is most familiar with the nature of the operation and the type of equipment the individual will be expected to operate, a particularly important consideration given the substantial variety of commercial vehicles operated in the industry. This circumstance is clearly recognized in the provisions of new § 391.44(d)(1), because it requires the road test to be conducted in accordance with the existing provisions of § 391.31(b) through (g). In particular, the road test regulation states, ''The road test must be of sufficient duration to enable the person who gives it to evaluate the skill of the person who takes it at handling the commercial motor vehicle, and associated equipment, that the motor carriers intends to assign to him/her'' (49 CFR 391.31(c)). That section goes on to specify the minimum tasks that the employer must include in the road test, all of which are essential aspects for safe operation of the particular CMV to be operated by the individual.

An individual must first be physically qualified by an ME under the alternative vision standard in § 391.44. Then the next step is a road test conducted with both the appropriate vehicle and under the operating conditions the individual has with the vision deficiency. This two-step process ensures that CMV operations can be performed safely. In other words, even if an individual with the vision deficiency is certified as physically qualified by an ME for the first time under the alternative standard, CMV operation will not be permitted by the individual unless and until safe operation can be demonstrated.

2. The Road Test Requirement Creates a Burden on Motor Carriers

Comments on the Road Test Requirement Creates a Burden on Motor Carriers: ATA commented that FMCSA's use of the road test would create an undue burden on employers by shifting some of the responsibility of the medical certification process from the ME to a non-medical professional, *i.e.,* the motor carrier. Additionally, ATA stated that § 391.31(b) requires motor carriers to ensure that road test evaluators are competent to evaluate and determine whether the individual tested can operate the assigned CMV. ATA continued that most road test evaluators are not medical professionals trained to evaluate and identify factors in which an individual's vision deficiency would impact the ability to operate a CMV; therefore, FMCSA's proposal would place an undue burden on motor carriers.

ACOEM stated the alternative vision standard shifts responsibility to the employer, who would be responsible for conducting a road test, which could result in inconsistent standards for assessing driver safety. In addition, ACOEM stated there is a concern the number of employer-required road tests will increase significantly. Concentra also commented that the alternative vision standard shifts responsibility to the employer for performing a road test.

In contrast, several commenters supported the inclusion of the road test as part of the alternative vision standard. For example, three commenters stated the road test is an additional safeguard that ensures a driver operating under the alternative vision standard can physically drive the CMV safely and a much more secure driver verification. Another commenter who has held a Federal vision exemption stated that a driving test would tell as much about the ability to drive safely ''as a bunch of vision tests.''

Response: FMCSA agrees with the commenters who stated the road test is another safeguard to ensure individuals with a vision deficiency can operate a CMV safely. As explained in the previous response, the road test is not part of the physical qualification determination, but an important additional requirement to ensure that the employer is satisfied that the individual qualified under the alternative standard can operate a CMV safely under the conditions involved in the operation. An employer should not consider an opportunity to verify the

ability of a CMV driver it employs to operate safely to be an undue burden. Employers are already under an obligation to ensure compliance by CMV drivers with other safety regulations as well (see 49 CFR 390.11 and 392.1(a)).

FMCSA disagrees that road test examiners lack the skills necessary to evaluate the operation of a CMV by an individual with a vision deficiency. The road test examiners required by § 391.31(b) must be able ''to evaluate and determine whether the person who takes the test has demonstrated that he/she is capable of operating the commercial motor vehicle.'' Observation by the road test examiner of the specific minimum operational tasks specified in § 391.31(c) (as well as any additional tasks included because of the type of CMV to be operated) does not require any specialized knowledge about the vision deficiency. The road test examiner should observe and evaluate activities involved in operation of a CMV in the same manner for all drivers requiring a road test.

As for ACOEM's concerns about the number of road tests increasing ''significantly,'' FMCSA does not find this will be the case. Drivers who have an appropriate level of experience operating a CMV with the vision deficiency are excepted from the road test, as provided in new § 391.44(d)(3) through (5). FMCSA uses a high estimate of 868 drivers who would be required to take the road test each year under the new alternative vision standard. The cost for each road test is estimated to be about $50.77, for a total annual cost of $44,000,[9] in addition to the costs of road tests already required. This is clearly not a financial or administrative burden on either any motor carrier required to administer a road test or the industry as a whole. The alternative vision standard offers an opportunity for CMV drivers unable to obtain a vision exemption to become qualified to operate a CMV in interstate commerce. The benefits, at a minimal cost, to the carriers and the industry of additions to the pool of CMV drivers are clear.

3. Road Test Creates Employer Conflicts of Interest

Comments on the Road Test Creates Employer Conflicts of Interest: ATA stated the road test could create conflicts of interest if a motor carrier has a financial interest in permitting the evaluated individual to work or a personal relationship with the individual. ACOEM commented that ''some carriers, especially smaller ones, may be more lenient on the passing criteria of the road test.'' Another commenter noted motor carriers have a self-interest in making sure drivers pass the road test and many make the road test simple with a limited number of ways it can be failed.

Response: FMCSA recognizes the potential existence of conflicts of interest in having an employer administer a road test to employees but finds the existence of such conflicts to be unlikely. Also, the potential for such conflicts is not unique to drivers physically qualified under the alternative vision standard but is possible with respect to all drivers tested. However, the governing regulation includes particular requirements to mitigate such conflicts, such as specifying the type of vehicle to be used and the tasks to be included (49 CFR 391.31(c)). It also precludes an owner-operator (*i.e.,* a person who is both a motor carrier and a driver) from self-administering the road test (49 CFR 391.31(b)). The certificate required to be issued by the road test examiner is subject to the requirement that it not be fraudulent or intentionally false (49 CFR 390.35) and includes an affirmative statement from the road test examiner that the individual tested can operate safely (49 CFR 391.31(f)). Most importantly, employers have a strong financial interest in ensuring the safety of their operations by engaging drivers, including those physically qualified with a vision deficiency under the alternative standard, who are able to operate safely.

4. Sufficiency of the Road Test

Comments on the Sufficiency of the Road Test: Concentra and ACOEM commented that the road test as outlined in § 391.31 is fairly minimal. It only requires demonstrating use of the CMV controls, turning, operating in traffic, and pre- and post-trip duties. There is no requirement for evaluating safe operation in conditions of darkness, inclement weather, or complex multisensory environments, such as congested traffic and construction zones, where a vision deficiency may be detrimental. According to Concentra and ACOEM, the road test also is not specific to a vehicle. They stated a simple road test cannot substitute for drivers lacking experience operating CMVs. ACOEM stated that having employers conduct the road test could result in inconsistent standards for assessing driver safety.

Similarly, ATA stated that a road test is an inadequate method to determine if an individual's vision deficiency will impact driving ability. ATA noted the driving environment would vary significantly among carriers and would not be a consistent evaluation tool.

Two commenters were generally supportive of the alternative vision standard as a way of opening the door for more job opportunities. However, one of the commenters stated that a single driving test may be too lenient to evaluate the full scope of driving capabilities. The commenter continued that it might be in the public interest to revise the proposed rule to scrutinize more than the proposed driving test. The other commenter stated that a one-time driving test may not be sufficient because individuals know they are under observation and can perform the one test safely.

Another commenter noted many motor carrier § 391.31 road tests are an exercise in ''check the box,'' and not a thorough test of the driver's ability. If motor carriers are going to conduct the road tests, the commenter stated clear road-testing standards aimed at determining if the loss of vision is affecting the driver's abilities and pass/fail criteria need to be provided.

Response: FMCSA finds the road test required under the alternative vision standard will be sufficiently comprehensive to evaluate and assess an individual's capability to operate a CMV safely. In addition, the Agency fails to discern different considerations for administering road tests for drivers physically qualified under the alternative vision standard as compared to drivers who are not. After 30 years with the vision waiver study and exemption programs, experience shows that individuals with vision loss in one eye are not limited by their lack of binocularity with respect to driving once they have adapted to and compensated for the change in vision. If an individual meets the alternative vision standard, the Agency expects there will be no adverse impact on safety due to the individual's vision. Therefore, employers should apply the same road test requirements to all drivers.

FMCSA disagrees with commenters that the road test outlined in § 391.31 is fairly minimal. The regulation requires demonstration of the essential elements of operating a CMV, including driving in traffic, passing other vehicles, turning, braking, backing, and parking. FMCSA acknowledges employers may have somewhat different standards for assessing driver safety; however, § 391.31 ensures all drivers demonstrate

[9] See Section X.A. of the Regulatory Analyses below for a full description of how these estimates are calculated.

the fundamental skills necessary to operate a CMV safely. As noted above, employers have a strong financial interest in ensuring they employ drivers who can operate a CMV safely.

As also noted above, the road test, contrary to commenters' assertions, does require the use of the specific type of vehicle that will be assigned to the individual to operate (see 49 CFR 391.31(c)). In addition, the applicable regulation requires that ''The motor carrier shall provide a road test form on which the person who gives the test shall rate the performance of the person who takes it at each operation or activity which is a part of the test'' (49 CFR 391.31(d)). If the road test is completed satisfactorily, the road test examiner must sign a certificate that states that it is the examiner's considered opinion that the individual has ''sufficient driving skill to operate safely'' (49 CFR 391.31(f)). The employer then retains both the road test form and the certificate (or a copy) in the driver qualification file required by 49 CFR 391.51, along with additional documentation that supports a determination that the individual can operate safely.

The road test, when required under the alternative vision standard, is only one of multiple regulatory elements that can work together to ensure that an individual physically qualified under the standard can operate a CMV safely. The alternative vision standard includes the additional safeguards of the collaborative physical qualification process by medical professionals and limiting certification to 12 months. All in all, the road test for individuals qualified under the alternative vision standard is one part of a comprehensive regulatory approach to ensure safe operations of a CMV.

5. Addition of a Driver Training Requirement

Comments on the Addition of a Driver Training Requirement: One commenter who supported the alternative vision standard stated a driving test should show proof that an individual qualified under the new standard can drive a CMV. However, the commenter did not agree with a one-time road test but stated a road test every year or every couple of years would suffice. The commenter continued that maybe there should be specialized training for individuals seeking certification under the alternative vision standard.

Response: FMCSA elects not to require any specialized training for individuals physically qualified under the alternative vision standard. The experience with the vision waiver and exemption programs has not revealed the need for specialized training for drivers with a vision deficiency. As stated above, experience shows that individuals with vision loss in one eye are not limited by their lack of binocularity with respect to driving once they have adapted to and compensated for the change in vision. Also, the driver will be subject to periodic review. Once a driver is hired, the employer is required to review the driver's safety performance through the annual motor vehicle record review (49 CFR 391.25).

N. Review of an Individual's Safety Performance

NPRM: FMCSA proposed that review of the safety performance of individuals medically certified under the alternative vision standard be performed by motor carriers in accordance with current regulatory requirements applicable to all drivers.

Comments on the Review of an Individual's Safety Performance: ATA stated it strongly opposes replacing the Agency review of an individual's driving record, as is done in the current exemption program, with the road test required in § 391.31. ACOEM commented that the MRB questioned in 2019 how a driver's safety record would be adequately assessed under an alternative vision standard, given that FMCSA reviews the driving safety record in the exemption program. ACOEM also stated the alternative vision standard shifts responsibility to the employer, who would be responsible for reviewing the safety record, which could result in inconsistent standards for assessing driver safety. Concentra made a similar comment.

Response: FMCSA does not find these comments persuasive and continues to find that the safety performance of individuals who are medically certified under the alternative vision standard should be evaluated in the same manner as that of other drivers. Motor carriers already routinely review and evaluate driving records for prospective and current employees, including employees with Federal vision exemptions. They must review both the motor vehicle records and the safety performance history, which must include accident information from previous employers for the prior 3 years when hiring a driver (49 CFR 391.23(a) and (d)). Motor carriers also must review motor vehicle records for all drivers annually (49 CFR 391.25). There is nothing different about evaluating a motor vehicle record for an individual medically certified under the alternative vision standard as compared to any other driver. Motor carriers are also required to ensure compliance by drivers with all safety regulations (49 CFR 390.11) and that drivers are generally qualified to drive a CMV (49 CFR 391.11). Thus, reviewing the safety performance of individuals certified under the alternative vision standard presents nothing new or novel for motor carriers and does not add or change a responsibility for them.

As stated in the NPRM, the 3-year safe driving history criterion of the prior vision waiver study and exemption programs with FMCSA's review of the driving record has served its purpose and is no longer necessary (see 86 FR 2356–57). Finally, the MRB's 2021 recommendations supersede its 2019 recommendations.

O. Restricting Eligibility To Use the Alternative Vision Standard by Vehicle Type

NPRM: FMCSA did not propose to restrict eligibility to use the alternative vision standard based on the type of vehicle an individual operates.

Comments on Restricting Eligibility to Use the Alternative Vision Standard by Vehicle Type: A commenter who is an ME was ''very concerned about changing the vision requirements.'' The commenter stated that most of the commenter's clients do not drive large CMVs, but rather drive delivery trucks, passenger vehicles, or emergency medical transport vehicles, which require ''decent vision'' for parking, maneuvering in traffic with lane changes, and driving in emergent conditions. The commenter suggested a ''carve out'' of eligibility to use the proposed alternative vision standard for individuals operating certain types of vehicles.

Response: FMCSA elects not to change the alternative vision standard based on this comment. The Agency continues to conclude that individuals who satisfy the alternative vision standard requirements do not create an increased risk of injury to themselves or others due to their vision and are physically qualified to operate any type of CMV safely. Neither the vision waiver study program nor the current exemption program restricted participation in the program based on the type of CMV the individual operated. Thus, the Agency has 30 years of experience evaluating individuals driving all types of CMVs. Commenters provided no new information or data that persuades the Agency to depart from its conclusion that the safety performance of individuals in the vision waiver study and the current exemption programs is at least as good as that of

the general population of CMV drivers, without regard to the type of vehicle operated. Accordingly, the Agency finds there is no available evidence to support holding individuals physically qualified under the alternative vision standard to a higher standard merely because of the type of CMV they operate.

P. The Alternative Vision Standard Creates More Employment Opportunities

NPRM: FMCSA stated in the NPRM that eliminating the prohibition on certifying individuals who cannot meet either the current visual acuity or field of vision standard, or both, in one eye (without an exemption) would enable more qualified individuals to operate as interstate CMV drivers without compromising safety. Eliminating the exemption program criterion of 3 years of intrastate CMV driving experience with the vision deficiency would allow individuals who live in States that do not issue vision waivers to be physically qualified. In addition, individuals who live in a State that issues vision waivers would be able to begin a career as an interstate CMV driver more quickly and may have more employment opportunities. Previously qualified interstate CMV drivers who are no longer able to meet either the distant visual acuity or field of vision standard, or both, in one eye would be able to return sooner to operating interstate.

Comments on the Alternative Vision Standard Creates More Employment Opportunities: Just over 40 percent of commenters supporting the proposed alternative vision standard stated it will provide more job opportunities for individuals to become interstate CMV drivers or provide the opportunity for existing drivers to stay in the industry. For example, OOIDA stated that, in many cases, drivers with decades of experience without any at-fault crashes must leave the profession because of the economic obstacles associated with the Federal vision exemption criteria. ''The prolonged period of required intrastate driving can discourage these drivers from staying in the industry.'' OOIDA commented that the alternative vision standard will ''reduce barriers to entry for both active and future CMV drivers'' and ''allow safe and experienced drivers to stay on the road.'' Another commenter stated the alternative vision standard could allow thousands of drivers who do not meet the existing vision standard to begin operating CMVs in interstate commerce without the need for an exemption. A different commenter stated the alternative vision rule allows for a larger pool of qualified drivers without compromising safety, and noted the country is short of drivers.

One commenter, a motor carrier, stated that the alternative vision standard would be good for the trucking industry and not increase danger to the public. The new standard would open the field to many drivers who do not have or have not been able to get a vision waiver. The commenter noted it would add two drivers with proven work ethic and ability to the company's interstate driving pool right off. Another commenter who is an ME has been unable to certify a few good drivers after they did not pass the vision standard. The commenter noted that it is difficult, particularly for local small businesses, to find qualified CDL operators.

Another commenter stated the proposed regulation has far reaching benefits. It would give individuals with vision that does not meet the existing outdated vision standard the opportunity to drive CMVs. It would boost the CMV driver industry; a boost that is needed now more than ever due to COVID–19. The rule also has the potential to bring greater efficiency to interstate commerce and the country in general. According to the commenter, it stands to reason that if fewer drivers are available it will take longer for goods to travel from place-to-place.

Six commenters who hold intrastate waivers stated they would benefit from being able to operate in interstate commerce. One of these commenters noted missing many good paying loads because of the intrastate restriction and further noted that eliminating it would increase the commenter's income greatly. Seven commenters supported the proposed alternative vision standard because it would either allow them to return to work as a CMV driver following an eye injury or give them the opportunity to become a CMV driver, which they did not have before due to poor vision in one eye.

Several commenters supported the alternative vision standard because the more individualized approach allows capable individuals to demonstrate their ability to operate a CMV safely. For example, the commenters stated the new standard is a step toward less discrimination in the workplace, inclusion of individuals with vision deficiencies, less frequent denial of job opportunities for individuals when a disability does not affect the ability to do the task at hand, and the opportunity for people to change their lives and to live more independently. Several more commenters noted specifically that the alternative vision standard would benefit older workers and especially older drivers with good work ethics and millions of miles worth of experience that benefits the industry and motoring public.

In contrast, one commenter, who has been driving for more than 34 years, stated the vision standard should be left alone. The commenter continued that the proposed alternative vision standard could put a lot of good drivers off the road.

Response: FMCSA continues to conclude the alternative vision standard, with its more individualized approach, is more equitable than the current exemption program and will enable more qualified individuals to operate as interstate CMV drivers without an adverse impact on safety. However, FMCSA clarifies that the new standard will not have a substantial impact on the industry or the number of available drivers. Although the rule provides substantial benefits to some individuals and will be beneficial to motor carriers and the industry, the Agency estimates approximately 868 interstate drivers will be added each year due to the new standard.[10]

The commenter who stated the alternative vision standard could take good drivers off the road misunderstands this rule. This rule does not change the existing vision standard. FMCSA expects current Federal vision exemption holders, as well as grandfathered drivers, will satisfy the alternative vision standard because it includes requirements they should already meet. Therefore, drivers who are currently operating in interstate commerce should not fail to satisfy the vision physical qualification standards, unless their vision has deteriorated.

Q. Change to the Medical Examination Process in 49 CFR 391.43(b)(1)

NPRM: FMCSA proposed to amend § 391.43(b)(1) by adding an ophthalmologist as a category of eye care professional who may perform the part of the physical qualification examination that involves visual acuity, field of vision, and the ability to recognize colors. Currently, the provision is limited to licensed optometrists.

Comments on the Change to the Medical Examination Process in 49 CFR 391.43(b)(1): ACOEM stated that the ''change allowing an ophthalmologist to complete the vision portion of the examination appears to be an oversight not previously identified and certainly makes sense. In fact, an ophthalmologist

[10] See Section X.A. of the Regulatory Analyses below for a full description of how this number is calculated.

may be preferred for complicated cases.''

Response: FMCSA adopts the changes to § 391.43(b)(1) as proposed in the NPRM with one minor change. FMCSA inserts ''licensed'' before optometrist for clarity and to conform to the existing regulatory text. FMCSA did not propose and declines to require the use of an ophthalmologist in any particular case.

R. Outside the Scope of the Rulemaking

Comments to the NPRM Outside the Scope of the Rulemaking: Rather than responding to the proposed rule, one commenter reported on the commenter's own driving record.

Comments to the NOA Outside the Scope of the Rulemaking: One commenter suggested consistent Federal vision requirements across all types of vehicles, including passenger vehicles. Another commenter stated that if FMCSA keeps adding more regulation the trucking business will fade away and that FMCSA does not have any concept of what a good regulation is. A different commenter stated that, with all that is going on in the trucking industry, FMCSA should be focusing on other concerns, such as truck parking. Finally, the AOA made suggestions that relate to the physical qualification standard for individuals who are treated with insulin to control diabetes mellitus.

Response: Because these comments are outside the scope of this rulemaking or are not responsive to the NPRM or NOA, no response from FMCSA is required. Commenters presenting an issue that is outside of the scope of this rulemaking may wish to consult § 389.31 for information on how to petition FMCSA to establish, amend, interpret, clarify, or withdraw a regulation to the extent such options relate to their concerns.

VII. Changes From the NPRM

This section describes changes relating to the alternative vision standard made in the final rule other than minor and editorial changes. The Agency discusses those changes in the Section-by-Section Analysis below. With respect to the Vision Evaluation Report, Form MCSA–5871, FMCSA describes all changes to the report because it is not discussed in the Section-by-Section Analysis.

A. Alternative Vision Standard

FMCSA proposed an alternative vision standard for an individual ''who cannot satisfy either the distant visual acuity or field of vision standard, or both,'' in the existing vision standard in one eye. ACOEM commented the proposed vision standard seems to allow any driver to meet the vision standard if one eye is at least 20/40 with or without corrective lenses. ACOEM continued that this would permit a driver who chooses not to obtain corrective lenses to use the proposed standard if the driver's vision in the better eye meets the existing vision standard. Concentra provided a similar comment. As discussed above, it was not the Agency's intent to change the scope of the current vision exemption program in this regard or to allow individuals who simply need corrective lenses to be physically qualified under the alternative vision standard.

FMCSA clarifies in the final rule that the alternative vision standard is applicable only if the worse eye does not meet the distant visual acuity standard with corrective lenses. FMCSA adds the limitation in § 391.41(b)(10)(ii) that a person who meets the requirements in § 391.44 is physically qualified to operate a CMV ''if the person does not satisfy, with the worse eye, either the distant visual acuity standard with corrective lenses or the field of vision standard, or both, in paragraph (b)(10)(i) of this section.'' The Agency makes conforming changes in the title of § 391.44, in paragraphs (a) and (c) of § 391.44, and in new § 391.45(f).

In paragraph (c) of § 391.44, FMCSA proposed, ''At least annually, but no later than 45 days after an ophthalmologist or optometrist signs and dates the Vision Evaluation Report, Form MCSA–5871, an individual who cannot satisfy either the distant visual acuity or field of vision standard, or both, in § 391.41(b)(10)(i) in one eye must be medically examined and certified by a medical examiner as physically qualified to operate a commercial motor vehicle in accordance with § 391.43.'' The sentence is long and not easy to follow. To improve readability, FMCSA removes the clause ''but no later than 45 days after an ophthalmologist or optometrist signs and dates the Vision Evaluation Report, Form MCSA–5871,'' and includes the substance in a new second sentence. To provide additional clarity, the Agency changes ''no later than'' to ''not more than'' 45 days. The second sentence reads, ''The examination must begin not more than 45 days after an ophthalmologist or optometrist signs and dates the Vision Evaluation Report, Form MCSA–5871.''

FMCSA proposed in § 391.44(c)(2)(iv) that an individual is not physically qualified to operate a CMV ''if there has not been sufficient time to allow the individual to adapt to and compensate for the change in vision.'' FMCSA has determined a change to this requirement will help to clarify that there must a period for the individual to adapt to and compensate for the vision loss after the vision deficiency is deemed stable by a medical professional. Accordingly, FMCSA removes ''there has not been sufficient time'' and inserts ''sufficient time has not passed since the vision deficiency became stable.'' Section 391.44(c)(2)(iv) reads, ''The individual is not physically qualified to operate a commercial motor vehicle if sufficient time has not passed since the vision deficiency became stable to allow the individual to adapt to and compensate for the change in vision.''

B. The Vision Evaluation Report, Form MCSA–5871

For the final Vision Evaluation Report, Form MCSA–5871, FMCSA makes several editorial changes on page 1. The paragraph reminding that the report contains sensitive information moves to the footer and appears on every page. FMCSA changes the heading ''Instructions to the Individual'' to ''Information for the Individual'' and places the paragraph before the new heading ''Information for the Ophthalmologist or Optometrist.'' The style for the definition of monocular vision changes from a paragraph to a numerical list for consistency purposes. Other minor editorial and formatting changes are made throughout the report for clarity, consistency, or as a result of making the report a fillable document.

The Agency deletes ''(if applicable)'' after the request for a driver's license number because it is not necessary. All individuals obtaining a vision evaluation will have some type of driver's license.

In the ''Information for the Individual'' section, FMCSA changes ''no later than'' to ''not more than'' 45 calendar days to conform the report to the revised regulatory text. FMCSA deletes ''certified'' before ''medical examiner'' in this section, as well as in the ''Information for the Ophthalmologist or Optometrist'' section, because it is no longer necessary. All MEs have been required to be certified and listed on FMCSA's National Registry of Certified Medical Examiners for several years.

In the first paragraph under the new heading ''Information for the Ophthalmologist or Optometrist,'' FMCSA adds in the first sentence that the individual is being evaluated ''as part of the process'' to determine whether the individual meets FMCSA's vision standard. This change clarifies that the physical qualification of individuals to operate a CMV is a

process, and the vision evaluation is one part of the process. In the second sentence, after ''monocular vision,'' FMCSA adds ''as defined by FMCSA,'' to signal to the reader that FMCSA has its own definition of monocular vision. The Agency deletes the sentence that provided, ''Completion of this report does not imply that the ophthalmologist or optometrist is making a decision to qualify the individual to drive a commercial motor vehicle.'' Instead, in the last sentence, FMCSA changes the word ''Any'' to ''The'' and inserts the following quoted language to provide more clearly that the determination as to whether the individual ''meets the vision standard and'' is physically qualified is made by an ME. FMCSA makes other minor changes for clarity, grammar, and to delete the use of pronouns.

In paragraph (2) of FMCSA's definition of *monocular vision,* the Agency conforms the language to the regulatory text and current vision exemption program. It provides that *monocular vision* means the individual has, in the worse eye, distant visual acuity of less than 20/40 ''with corrective lenses.''

As the MRB recommended, FMCSA adds the alternative vision standard that individuals with monocular vision, as defined by FMCSA, must satisfy to be physically qualified. The Agency states that the standard is provided ''For general informational purposes only'' to ensure that ophthalmologists and optometrists understand that they do not determine whether the individual meets the alternative vision standard for medical certification to operate a CMV.

In question 3 on page 2 pertaining to distant visual acuity, FMCSA replaces ''(please provide both if applicable)'' with ''(select N/A if there is no vision in an eye).'' The Agency adds boxes that can be checked to indicate distant visual acuity is not applicable when there is no vision in an eye.

With respect to question 7 on page 2, which asks if the individual has monocular vision as defined by FMCSA, the Agency includes a follow-up request. It provides, ''If yes, cause of the monocular vision (describe),'' which was question 8 in the draft report. FMCSA makes this change for consistency with the style for other follow-up questions in the report. FMCSA renumbers the following questions accordingly.

In question 8, ''When did the monocular vision begin?'' changes to ''Date the monocular vision began:'' for consistency with the style of other entries.

Question 10 relating to progressive eye conditions, which was question 13 in the draft report, follows the questions regarding monocular vision to consolidate the medical information on the report. All the medical opinions follow. Instead of providing information about progressive eye conditions in a table, the report now uses a narrative format. FMCSA adds a request for additional information if the condition is not stable.

As recommended by the MRB, the medical opinion regarding whether the vision deficiency is stable follows the information about progressive eye conditions as question 11. FMCSA adds a follow-up request in question 11 for the date the vision deficiency became stable if it is deemed stable. This change provides additional information for the ME regarding how long the vision deficiency has been stable. In question 12, the Agency conforms the language to the revised regulatory text and expands the medical opinion as recommended by the MRB. It reads, ''In your medical opinion, has sufficient time passed since the vision deficiency became stable to allow the individual to adapt to and compensate for the change in vision and to drive a commercial motor vehicle safely?''

FMCSA numbers the medical opinion asking if a vision evaluation is required more often than annually as question 13. FMCSA includes in the follow-up request not only how often a vision evaluation should be required, but why. FMCSA adds space to enter additional comments and instructions to attach additional pages as needed as a new question 14. Finally, FMCSA makes minor style changes to conform punctuation and formatting throughout the report.

The final Vision Evaluation Report, Form MCSA–5871, is available in the docket for this rulemaking. The Agency invites public comment on the report under the Paperwork Reduction Act as provided in the information collection, titled ''Medical Qualification Requirements,'' discussed in section X.F. below. Comments should be submitted to OIRA at OMB as provided in the **ADDRESSES** section above.

VIII. International Impacts

Motor carriers and drivers are subject to the laws and regulations of the countries in which they operate unless an international agreement states otherwise. Drivers and carriers should be aware of the regulatory differences among nations. Pursuant to the terms of the 1998 medical reciprocity agreement with Canada, the United States will notify Canada that it has adopted an alternative vision standard and propose the countries review their applicable vision standards to determine whether they remain equivalent.

IX. Section-by-Section Analysis

This section-by-section analysis provides changes from the proposed rule. FMCSA discusses regulatory changes first in numerical order, followed by changes to Agency guidance.

A. Regulatory Provisions

Section 391.31—Road Test

FMCSA adopts § 391.31(f) as proposed and removes the driver's social security number, the driver's license number, and the State of issuance of the driver's license from the Certification of Road Test. The Agency adopts paragraph (h) as proposed but adds the control number (2126–0072) provided by OMB for the information collection.

Section 391.41—Physical Qualifications for Drivers

FMCSA adopts § 391.41(b)(10) as proposed but adds a limitation to clarify when the alternative vision standard is applicable. Specifically, the Agency adds the limitation in § 391.41(b)(10)(ii) that a person is physically qualified to operate a CMV who meets the requirements in § 391.44, ''if the person does not satisfy, with the worse eye, either the distant visual acuity standard with corrective lenses or the field of vision standard, or both, in paragraph (b)(10)(i) of this section.''

Section 391.43—Medical Examination; Certificate of Physical Examination

FMCSA adds in § 391.43(b)(1) that an ophthalmologist may perform the vision part of the physical qualification examination as proposed. FMCSA also inserts the word ''licensed'' before optometrist to conform with the existing regulation.

Section 391.44—Physical Qualification Standards for an Individual Who Does Not Satisfy, With the Worse Eye, Either the Distant Visual Acuity Standard With Corrective Lenses or the Field of Vision Standard, or Both

FMCSA changes the title of § 391.44 and introductory paragraphs (a) and (c) to conform to the change in § 391.41(b)(10)(ii). Specifically, FMCSA clarifies the alternative vision standard is applicable to an individual ''who does not satisfy, with the worse eye, either the distant visual acuity standard with corrective lenses or the field of vision standard, or both,'' in renumbered § 391.41(b)(10)(i).

In introductory paragraph (b), the Agency inserts the word ''licensed'' before optometrist for consistency and clarity. In paragraph (b)(2), FMCSA replaces ''his or her'' with ''the ophthalmologist or optometrist's.''

To improve readability in introductory paragraph (c), FMCSA removes the clause ''but no later than 45 days after an ophthalmologist or optometrist signs and dates the Vision Evaluation Report, Form MCSA–5871,'' and includes the substance in a new second sentence. To provide additional clarity, the Agency changes ''no later than'' to ''not more than'' 45 days. The second sentence reads, ''The examination must begin not more than 45 days after an ophthalmologist or optometrist signs and dates the Vision Evaluation Report, Form MCSA–5871.''

FMCSA makes clarifying changes to paragraph (c)(2)(iv). FMCSA removes ''there has not been sufficient time'' and inserts ''sufficient time has not passed since the vision deficiency became stable.'' The paragraph reads, ''The individual is not physically qualified to operate a commercial motor vehicle if sufficient time has not passed since the vision deficiency became stable to allow the individual to adapt to and compensate for the change in vision.''

FMCSA makes minor changes in paragraph (d). In paragraph (d)(3)(ii)(A), FMCSA inserts ''in the specific'' before excepted interstate commerce to remind the reader that only interstate commerce excepted by either § 390.3T(f) or § 391.2 satisfies the requirements of the regulation. FMCSA changes a citation in paragraph (d)(4) from ''§ 391.41(b)(10)'' to ''§ 391.41(b)(10)(i)'' to clarify that the existing vision standard is being referenced. In addition, the Agency makes a tense change from ''holds'' to ''held.'' FMCSA also makes a tense change in paragraph (d)(5) from ''is'' to ''was.''

Section 391.45—Persons Who Must Be Medically Examined and Certified

FMCSA makes conforming changes to § 391.45(f). It provides, in relevant part, any driver ''who does not satisfy, with the worse eye, either the distant visual acuity standard with corrective lenses or the field of vision standard, or both, in § 391.41(b)(10)(i)'' must be recertified at least every 12 months.

Section 391.51—General Requirements for Driver Qualification Files

FMCSA adopts § 391.51(b)(3) as proposed, which provides the driver qualification file must include the written statement from the motor carrier and certification from the driver required by § 391.44(d)(3).

Section 391.64—Grandfathering for Certain Drivers Who Participated in a Vision Waiver Study Program

FMCSA proposed to change the title of § 391.64 to remove a reference to a prior diabetes waiver study program; however, that change was made in a different rule (86 FR 35637 (July 7, 2021)). Otherwise, FMCSA adopts § 391.64 as proposed. This section provides that this rule does not apply to individuals certified under § 391.64(b) for 1 year from the effective date of this rule. After 1 year, any MEC, Form MCSA–5876, issued under § 391.64(b) will be void.

B. Guidance

This rule amends a regulation that has associated guidance. Such guidance does not have the force and effect of law, is strictly advisory, and is not meant to bind the public in any way. Conformity with guidance is voluntary. Guidance is intended only to provide information to the public regarding existing requirements under the law or FMCSA policies. Guidance does not alter the substance of a regulation.

Appendix A to Part 391—Medical Advisory Criteria

FMCSA removes section II.J., Vision: § 391.41(b)(10), in the Medical Advisory Criteria of appendix A to part 391 in its entirety as proposed.

Guidance for § 391.41

Guidance for specific regulations is available through the Guidance Portal on FMCSA's website. The Agency revises the guidance to Question 3 for § 391.41 [11] to reflect the changes made by this rule as proposed. FMCSA conforms the language to the number of medical conditions that are not subject to an ME's judgment (*i.e.,* two medical conditions), and removes ''vision'' from the list of conditions for which an ME has no discretion. In addition, FMCSA changes ''physical examinations'' to ''physical qualification examinations'' to reflect current Agency terminology. Finally, the Agency removes the following quoted language that provides the ME is knowledgeable about whether ''a particular condition would interfere with the driver's ability to operate a CMV safely.'' In its place, FMCSA inserts ''the driver's physical condition is adequate to enable the driver to operate the vehicle safely.'' The inserted language aligns with the requirements in 49 U.S.C. 31136(a)(3) and reflects that each of FMCSA's physical qualification standards has different regulatory requirements regarding how an ME is to evaluate a condition. The guidance for Question 3 reads as follows:

Question 3: What are the physical qualification requirements for operating a CMV in interstate commerce?

Guidance: The physical qualification regulations for drivers in interstate commerce are found at § 391.41. Instructions to medical examiners performing physical qualification examinations of these drivers are found at § 391.43.

The qualification standards cover 13 areas, which directly relate to the driving function. All but two of the standards require a judgment by the medical examiner. A person's qualification to drive is determined by a medical examiner who is knowledgeable about the driver's functions and whether the driver's physical condition is adequate to enable the driver to operate the vehicle safely. In the case of hearing and epilepsy, the current standards are absolute, providing no discretion to the medical examiner. However, drivers who do not meet the current requirements may apply for an exemption as provided by 49 CFR part 381.

X. Regulatory Analyses

A. Executive Order (E.O.) 12866 (Regulatory Planning and Review), E.O. 13563 (Improving Regulation and Regulatory Review), and DOT Regulatory Policies and Procedures

FMCSA has considered the impact of this final rule under E.O. 12866 (58 FR 51735 (Oct. 4, 1993)), Regulatory Planning and Review; E.O. 13563 (76 FR 3821 (Jan. 21, 2011)), Improving Regulation and Regulatory Review; and DOT's regulatory policies and procedures. OIRA within OMB has determined that this final rule is not a significant regulatory action under section 3(f) of E.O. 12866, as supplemented by E.O. 13563, and does not require an assessment of potential costs and benefits under section 6(a)(3) of E.O. 12866. Accordingly, OMB has not reviewed it under that E.O. The Agency has determined that the final rule results in cost savings.

The Regulatory Impact Assessment follows:

Baseline for the Analysis

Drivers who do not satisfy, with the worse eye, either the existing distant visual acuity standard with corrective lenses or the field of vision standard, or both, may apply to FMCSA for an

[11] Agency identifier FMCSA–MED–391.41–Q3, available at *https://www.fmcsa.dot.gov/medical/driver-medical-requirements/what-are-physical-qualification-requirements-operating-cmv* (last accessed Sept. 7, 2021).

exemption from the standard to operate CMVs in interstate commerce (49 CFR part 381, subpart C). To do so, the driver must submit a letter of application and supporting documents to enable FMCSA to evaluate the safety impact of the exemption.[12] Currently, FMCSA grants exemptions to applicants who meet specific criteria, including stable vision and experience safely operating a CMV with the vision deficiency. Since the inception of the vision exemption program, the predominant reason for denial of an exemption is less than 3 years of experience operating with the vision deficiency. The Agency must ensure that the exemption will likely achieve a level of safety that is equivalent to or greater than the level that would be achieved by complying with the regulations.

If an exemption is granted, the driver must meet certain conditions to maintain the exemption. The driver must receive an annual vision evaluation by an ophthalmologist or optometrist and an annual physical qualification examination by an ME. In addition, the Agency must monitor the implementation of each exemption and immediately revoke an exemption if: The driver fails to comply with the terms and conditions; the exemption has resulted in a lower level of safety than was maintained before the exemption; or continuation of the exemption would not be consistent with the goals and objectives of the Federal Motor Carrier Safety Regulations (49 CFR 381.330).

FMCSA monitors vision-exempted drivers on a quarterly basis. If any potentially disqualifying information is identified, FMCSA will request a copy of the violation or crash report from the driver. Should the violation be disqualifying, FMCSA will revoke the exemption immediately.

Currently, 1,967 drivers hold vision exemptions.[13] Compared to all interstate CMV drivers operating in the United States in 2019 (4 million, including 3.4 million who hold CDLs),[14] these drivers represent less than 0.1 percent of the population.[15] There are approximately 1,806 grandfathered drivers.[16] FMCSA checks the driving records of grandfathered drivers to determine if they continue to operate CMVs safely.

Impact of the Final Rule: Physical Qualification and Road Test

Physical Qualification

As a result of this final rule, an individual who does not satisfy, in the worse eye, either the existing distant visual acuity standard with corrective lenses or field of vision standard, or both, can be physically qualified without applying for or receiving an exemption. The individual will still have to receive a vision evaluation by an ophthalmologist or optometrist. The ophthalmologist or optometrist will complete the Vision Evaluation Report, Form MCSA–5871.

For those who obtain an MEC, Form MCSA–5876, this action may represent a streamlined process compared to the requirements of the vision exemption program in that the driver will not need to compile and submit the letter of application and supporting documentation to FMCSA, or respond to any subsequent requests for information. However, it is possible that the ME could issue a certificate that is valid for a shorter time to monitor the condition. In such circumstances, under the vision exemption program, the applicant would likely not receive an exemption. For those who do not obtain an MEC, Form MCSA–5876, the result may or may not have been the same under the vision exemption program.

This final rule will result in the discontinuation of the Federal vision exemption program. Instead, the physical qualification determination of individuals in, or who would be applying to, the exemption program will be made by an ME, who is trained and qualified to make such determinations, considering the information received in the Vision Evaluation Report, Form MCSA–5871, from the ophthalmologist or optometrist.

Road Test

Instead of requiring 3 years of intrastate driving experience with the vision deficiency as in the current exemption program, individuals physically qualified under the alternative vision standard for the first time must complete a road test before operating in interstate commerce. The road test will be conducted by motor carriers in accordance with the road test already required by § 391.31.

As described in the NPRM, individuals will be excepted from the road test requirement if they have 3 years of intrastate or specific excepted interstate CMV driving experience with the vision deficiency, hold a valid Federal vision exemption, or are medically certified under § 391.64(b). These individuals have already demonstrated they can operate a CMV safely with the vision deficiency. FMCSA finds that a road test is an appropriate indicator of an individual's ability to operate a CMV safely with the vision deficiency. Thus, the Agency expects there will be no adverse impact on safety from eliminating the intrastate driving experience criterion. When the Federal Highway Administration (FHWA), the predecessor agency to FMCSA, adopted the road test in § 391.31, it stated that the interests of CMV safety would be promoted by ensuring drivers have demonstrated their skill by completing the road test (35 FR 6458, 6450 (Apr. 22, 1970)).

The intrastate driving experience criterion has the limitation that some States do not have waiver programs through which drivers can obtain the driving experience necessary to meet the criteria of the Federal vision exemption program. The removal of the 3-year experience criterion under this final rule will more readily allow these individuals to operate in interstate commerce. However, the current number of exemption holders, grandfathered drivers, and applicants denied exemptions annually represents less than 1 percent of all interstate CMV drivers.

The Agency expects this final rule will be safety neutral. FMCSA notes that, although it will no longer directly monitor the safety performance of drivers, motor carriers will continue to monitor individuals' safety performance when hiring drivers and during the annual inquiry and review of the driving record required by §§ 391.23 and 391.25, respectively.

Costs

FMCSA estimates that the final rule will result in incremental cost savings of approximately $1.6 million annually from the elimination of the Federal vision exemption program and contract expenditures (Table 1). As described in detail below, FMCSA also accounts for

[12] A copy of the application template is available in the docket and at *https://www.fmcsa.dot.gov/sites/fmcsa.dot.gov/files/docs/regulations/medical/driver-medical-requirements/10451/vision-exemption-package-0918.pdf* (last accessed Aug. 19, 2021).

[13] FMCSA data as of August 5, 2021.

[14] FMCSA 2020 Pocket Guide to Large Truck and Bus Statistics, available at *https://www.fmcsa.dot.gov/sites/fmcsa.dot.gov/files/2020-10/FMCSA%20Pocket%20Guide%202020-v8-FINAL-10-29-2020.pdf* (last accessed Aug. 9, 2021).

[15] Compared to all (interstate and intrastate) CMV drivers, 6.8 million, or CDL drivers, 4.9 million, the percentage is even lower.

[16] The provisions of 49 CFR 391.41(b)(10) do not apply to drivers who were in good standing on March 31, 1996 in a vision waiver study program; provided, they meet certain conditions (49 CFR 391.64(b)). This figure may not represent active drivers.

the annual cost of the road test requirement at approximately $44,000.

TABLE 1—COST SAVINGS: FEDERAL VISION EXEMPTION PROGRAM CONTRACT AND ROAD TEST

[2020 dollars]

Fiscal year	Contract cost [a] [b]	Road test	Total
2021–2022	($1,596,375)	$44,048	($1,552,327)
2022–2023	(1,644,267)	44,048	(1,600,219)
2023–2024	(1,693,595)	44,048	(1,649,547)
2024–2025	(1,744,402)	44,048	(1,700,354)

[a] For years 2022–2023, 2023–2024, and 2024–2025, FMCSA estimated an average contract cost increase of 3 percent and extrapolated based on the percent increase of previous years.

[b] The program contract estimate for 2021–2022 was adjusted to 2020 dollars from the value of $1,577,268 in 2019 dollars used in the NPRM. FMCSA applied a multiplier of 1.012114, extracted from the Bureau of Economic Analysis Gross Domestic Product (GDP) Implicit Price Deflator series from December 21, 2020. The GDP deflator for 2020 of 113.625 divided by the deflator of 112.265 for 2019 is equal to 1.012114. $1,577,268 × 1.012114 = $1,596,375.

The 1,967 current vision exemption holders will no longer have to apply for exemptions and potential drivers who would not qualify for an exemption because they do not have 3 years of intrastate driving experience may meet the alternative vision standard and be able to operate a CMV in interstate commerce. This rule leads to a reduction in burden, as drivers will no longer be required to create and assemble the substantial amount of information and documentation necessary to apply for or renew an exemption, or to respond to subsequent requests for information. However, the affected population is small (less than 1 percent of CMV drivers), and the relative advantages for these individuals are unlikely to affect market conditions in the truck and bus industries.

FMCSA estimates that the road test will result in a total annual cost impact of $44,000 (Table 2). There will be approximately 868 drivers requiring a road test under § 391.44 each year. This number is the average of new applications for the vision exemption program FMCSA received over years 2018 through 2020.[17] FMCSA recognizes this is a high estimation and overstates the burden associated with the road test. While some of the individuals will already be required to obtain a road test under § 391.31, in the absence of the requirement in § 391.44(d), FMCSA lacks internal data to estimate how many individuals will already be required to obtain a road test. Therefore, FMCSA opted for a conservative approach of assuming all 868 individuals would require a road test.

As described above, motor carriers will be responsible for administering the test to the drivers, which is estimated to take 0.55 hours (33 minutes). For the hourly wage rates, FMCSA used $31 for the drivers [18] (Table 3) and $61 for the motor carrier's compliance officer.[19]

TABLE 2—ROAD TEST COST CALCULATIONS

[2020 dollars]

Drivers/Motor carriers	868
Test Hours	0.55
Driver Wage	$30.95
Subtotal	$14,770
Compliance Officer Wage [20]	$61.35
Subtotal	$29,278
Sum	$44,048

Note: Totals may not sum due to rounding.

TABLE 3—WAGE RATES FOR CMV TRUCK DRIVERS

Occupational title	BLS standard occupation code	North American Industry Classification System (NAICS) occupational designation	Total employees	Median hourly base wage	Fringe benefit rate [c]	Median hourly base wage + fringe benefits
Heavy and Tractor-Trailer Truck Drivers.	53–3032	All Industry	1,797,710	$22.66	52%	$34.47
Light Truck Drivers	53–3033	All Industry	929,470	17.81	52%	27.09
Bus drivers, school and or special client.	53–3052	All Industry	162,850	22.07	52%	33.57
Bus drivers, transit and intercity.	53–3058	All Industry	431,986	15.54	52%	23.64

[17] In 2018 there were 1,073 applicants, in 2019 there were 1,030, and in 2020 there were 500 ((1,073 + 1,030 + 500) ÷ 3 = 868).

[18] Department of Labor (DOL), Bureau of Labor Statistics (BLS). Occupational Employment and Wages, May 2020, 53–0000 Transportation and Material Moving Occupations. Available at *https://www.bls.gov/oes/current/oes530000.htm* (last accessed Aug. 26, 2021).

[19] DOL, BLS. Occupational Employment and Wages, May 2020, 13–1041 Compliance Officers. Available at *https://www.bls.gov/oes/current/oes131041.htm* (last accessed Aug. 26, 2021).

[20] In addition to the fringe benefit rate of 52 percent, FMCSA also applied an overhead rate of 27 percent to the compliance officer's wage. The Agency used industry data gathered for the Truck Costing Model developed by the Upper Great Plains Transportation Institute, North Dakota State University (Berwick, Farooq. Truck Costing Model for Transportation Managers. North Dakota State University. Upper Great Plains Transportation Institute. Aug. 2003. Appendix A, pp. 42–47. Available at: *http://www.mountain-plains.org/pubs/pdf/MPC03-152.pdf* (last accessed Aug. 20, 2021)). Research conducted for this model found an average cost of $0.107 per mile of CMV operation for management and overhead, and $0.39 per mile for labor, indicating an overhead rate of 27 percent (27% = $0.107 ÷ $0.39 (rounded to the nearest whole percent)).

TABLE 3—WAGE RATES FOR CMV TRUCK DRIVERS—Continued

Occupational title	BLS standard occupation code	North American Industry Classification System (NAICS) occupational designation	Total employees	Median hourly base wage	Fringe benefit rate [c]	Median hourly base wage + fringe benefits
Weighted Driver Wage	.....	.....	.....	.....	.....	30.95

[c] DOL, BLS. ''Employer Cost of Employee Compensation Dec. 2020 News Release,'' Table 4: Employer Costs for Employee Compensation for private industry workers by occupational and industry group. Available at *https://www.bls.gov/news.release/pdf/ecec.pdf* (last accessed Nov. 2, 2020). The fringe benefit rate is the ratio of hourly wage for average hourly wage for a private industry worker and the associated hourly benefit rate (52% = 13.78 ÷ $26.45 (rounded to the nearest whole percent)). FMCSA does not apply an overhead rate to the driver's hourly wage, as the road test occurs prior to being employed.

Although the Agency acknowledges there are motor carriers employing multiple drivers who would be certified under the new alternative vision standard, FMCSA lacks data to estimate the exact number of motor carriers impacted by this rule. Therefore, to ensure the inclusion of all affected motor carriers, FMCSA opted for a conservative approach of assuming a 1:1 ratio of drivers per motor carrier, making $44,000 a likely overestimate. Additionally, there may be some drivers medically certified under the new alternative vision standard who are also motor carriers, in which case the test must be given by a person other than themselves (49 CFR 391.31(b)). FMCSA treats the impacts on these drivers as equivalent to those of all affected drivers. Using this approach, the Agency estimates the cost for each road test at $50.77.[21]

Benefits

Eliminating the prohibition on certifying individuals who do not satisfy, in the worse eye, either the existing visual acuity standard with corrective lenses or field of vision standard, or both, without an exemption will enable more qualified individuals to operate as interstate CMV drivers without compromising safety. These drivers are relieved of the time and paperwork burden associated with applying for or renewing an exemption.[22] The alternative vision standard allows previously qualified interstate CMV drivers who are no longer able to satisfy, in the worse eye, either the existing distant visual acuity standard with corrective lenses or field of vision standard, or both, to return sooner to operating interstate. Additional employment opportunities may also result from the removal of the 3 years of intrastate driving experience requirement, which is a criterion of the current exemption program. Drivers who do not have 3 years of intrastate driving experience may meet the alternative vision standard and be able to operate a CMV in interstate commerce. A one-time road test is less burdensome on drivers than obtaining 3 years of intrastate driving experience. It also addresses the consideration that many drivers live in States that do not issue vision waivers. The road test provides more drivers the opportunity to operate a CMV.

Regarding risk, the Agency expects no changes in risk resulting from the very small number of additional individuals affected by this final rule relative to those of the baseline. Therefore, FMCSA considers this final rule to be safety neutral.

B. Congressional Review Act

This final rule is not a *major rule* as defined under the Congressional Review Act (5 U.S.C. 801–808).[23]

C. Regulatory Flexibility Act (Small Entities)

The Regulatory Flexibility Act (RFA) (5 U.S.C. 601 *et seq.*), as amended by the Small Business Regulatory Enforcement Fairness Act of 1996,[24] requires Federal agencies to consider the effects of the regulatory action on small business and other small entities and to minimize any significant economic impact. The term ''small entities'' comprises small businesses and not-for-profit organizations that are independently owned and operated and are not dominant in their fields, and governmental jurisdictions with populations of less than 50,000 (5 U.S.C. 601(6)). Accordingly, DOT policy requires an analysis of the impact of all regulations on small entities, and mandates that agencies strive to lessen any adverse effects on these businesses.

This rule affects drivers and motor carriers. Drivers are not considered small entities because they do not meet the definition of a small entity in section 601 of the RFA. Specifically, drivers are considered neither a small business under section 601(3) of the RFA, nor are they considered a small organization under section 601(4) of the RFA.

The Small Business Administration (SBA) defines the size standards used to classify entities as small. SBA establishes separate standards for each industry, as defined by the NAICS. This rule will affect many different industry sectors in addition to the Transportation and Warehousing sector (NAICS sectors 48 and 49); for example, the Construction sector (NAICS sector 23), the Manufacturing sector (NAICS sectors 31, 32, and 33), and the Retail Trade sector (NAICS sectors 44 and 45). Industry groups within these sectors have size standards for qualifying as small based on the number of employees (*e.g.,* 500 employees), or on the amount of annual revenue (*e.g.,* $27.5 million in revenue). To determine the NAICS industries potentially affected by this rule, FMCSA cross-referenced occupational employment statistics from the BLS with NAICS industry codes. A maximum of 868 motor carriers will be impacted in a given year. Even if all affected motor carriers were small and operated in the same NAICS code, it is unlikely that this rule will impact a substantial number of small entities.

The RFA does not define a threshold for determining whether a specific regulation results in a significant impact. However, the SBA, in guidance to government agencies, provides some objective measures of significance that the agencies can consider using. One measure that could be used to illustrate a significant impact is revenue costs,

[21] ($61.35 × 0.55) + ($30.95 × 0.55) = $50.77.

[22] As discussed below in section X.F. with respect to the information collection titled ''Medical Qualification Requirements,'' FMCSA attributes 2,236 annual burden hours at a cost of $67,486 for drivers to request and maintain a vision exemption. The final rule eliminates this entire burden.

[23] A *major rule* means any rule that OMB finds has resulted in or is likely to result in (a) an annual effect on the economy of $100 million or more; (b) a major increase in costs or prices for consumers, individual industries, Federal agencies, State agencies, local government agencies, or geographic regions; or (c) significant adverse effects on competition, employment, investment, productivity, innovation, or on the ability of United States-based enterprises to compete with foreign-based enterprises in domestic and export markets (5 U.S.C. 804(2)).

[24] Public Law 104–121, 110 Stat. 857 (Mar. 29, 1996), 5 U.S.C. 601 note.

specifically, if the cost of the regulation exceeds 1 percent of the average annual revenues of small entities in the sector. Given the rule's average annual per-entity impact of $33.74,[25] a small entity would need to have average annual revenues of less than $3,374 to experience an impact greater than 1 percent of average annual revenue. This is an average annual revenue that is smaller than would be required for a firm to support one employee; therefore, this action will not result in a significant impact.

Consequently, I certify that this action will not have a significant economic impact on a substantial number of small entities.

D. Assistance for Small Entities

In accordance with section 213(a) of the Small Business Regulatory Enforcement Fairness Act of 1996,[26] FMCSA wants to assist small entities in understanding this final rule so they can better evaluate its effects on themselves and participate in the rulemaking initiative. If the final rule will affect your small business, organization, or governmental jurisdiction and you have questions concerning its provisions or options for compliance; please consult the person listed under **FOR FURTHER INFORMATION CONTACT**.

Small businesses may send comments on the actions of Federal employees who enforce or otherwise determine compliance with Federal regulations to the SBA's Small Business and Agriculture Regulatory Enforcement Ombudsman and the Regional Small Business Regulatory Fairness Boards. The Ombudsman evaluates these actions annually and rates each agency's responsiveness to small business. If you wish to comment on actions by employees of FMCSA, call 1–888–REG–FAIR (1–888–734–3247). DOT has a policy regarding the rights of small entities to regulatory enforcement fairness and an explicit policy against retaliation for exercising these rights.

E. Unfunded Mandates Reform Act of 1995

The Unfunded Mandates Reform Act of 1995 (2 U.S.C. 1531–1538) requires Federal agencies to assess the effects of their discretionary regulatory actions. In particular, the Act addresses actions that may result in the expenditure by a State, local, or Tribal government, in the aggregate, or by the private sector of $170 million (which is the value equivalent of $100 million in 1995, adjusted for inflation to 2020 levels) or more in any 1 year. Although this final rule will not result in such an expenditure, the Agency discusses the effects of this rule elsewhere in this preamble.

F. Paperwork Reduction Act

The Paperwork Reduction Act of 1995 (44 U.S.C. 3501–3520) requires that an agency consider the impact of paperwork and other information collection burdens imposed on the public. An agency is prohibited from collecting or sponsoring an information collection, as well as imposing an information collection requirement, unless it displays a valid OMB control number (5 CFR 1320.8(b)(3)(vi)).

This final rule impacts an existing information collection request (ICR) titled ''Medical Qualification Requirements'' (OMB control number 2126–0006), and a new ICR titled ''391.31 Road Test Requirement'' (OMB control number 2126–0072). The ICRs will be discussed separately below, followed by a discussion of the net information collection and reporting burdens of the final rule. FMCSA will submit a copy of the final rule to OIRA at OMB for review and approval of the information collections.

1. Information Collection Requests

a. Medical Qualification Requirements ICR

This final rule revises the existing approved Medical Qualification Requirements ICR (OMB control number 2126–0006), which expires on December 31, 2024. FMCSA seeks approval for the revision of the ICR due to the Agency's development of this rule, which includes the use of the Vision Evaluation Report, Form MCSA–5871.

Title: Medical Qualification Requirements.

OMB Control Number: 2126–0006.

Type of Review: Revision of a currently approved information collection.

Summary: In this final rule, FMCSA establishes an alternative vision standard for individuals who do not satisfy, with the worse eye, either FMCSA's existing distant visual acuity standard with corrective lenses or the field of vision standard, or both, in renumbered 49 CFR 391.41(b)(10)(i) to be physically qualified to operate a CMV in interstate commerce under specified conditions. The alternative vision standard uses a collaborative process for physical qualification. Before an individual may be medically certified under the alternative vision standard, the individual must have a vision evaluation conducted by an ophthalmologist or optometrist. The ophthalmologist or optometrist records the findings from the vision evaluation and provides specific medical opinions on the Vision Evaluation Report, Form MCSA–5871. Then, an ME performs an examination, considers the information provided on the report, and determines whether the individual meets the alternative vision standard, as well as FMCSA's other physical qualification standards. If the ME determines the individual meets the physical qualification standards, the ME may issue an MEC, Form MCSA–5876, for a maximum of 12 months. The Vision Evaluation Report, Form MCSA–5871, supports safety by ensuring that CMV drivers are physically qualified to operate trucks and buses on our Nation's highways.

Response to comments: The NPRM served as the 60-day notice for the information collection revision and requested public comment on the draft Vision Evaluation Report, Form MCSA–5871, and information collection. FMCSA received no substantive comments regarding the report, or the burden associated with the information collection, in response to the NPRM. As discussed above in sections V.B. and C., the MRB recommended minor changes to the report and FMCSA published an NOA seeking comment on the recommendations. FMCSA again received no substantive comments regarding the report or burden of the information collection. Section VII.B. above describes all the changes made to the report in the final rule. With respect to the information collection burden, FMCSA adds requests on the report for a date and a couple of words to explain why a progressive eye condition is not stable and the rationale when a vision evaluation is needed more frequently than annually. However, FMCSA finds that the minor changes to the Vision Evaluation Report, Form MCSA–5871, do not require revision of FMCSA's time estimate to complete the report. FMCSA finds no basis from the comments to change the analysis of the burden for the information collection.

Burden estimates: Because of this final rule, FMCSA adds a new information collection (IC–8 Qualifications of Drivers; Vision Standard) to the existing ICR for an ophthalmologist or optometrist to complete a Vision Evaluation Report, Form MCSA–5871. FMCSA estimates

[25] The motor carrier's wage is estimated at $61.35, as described in more detail in the Regulatory Impact Assessment. The motor carrier would spend 30 minutes administering the road test, and 3 minutes on the associated paperwork, leading to a total of 33 minutes, or 0.55 hours. 0.55 hours × $61.35 = $33.74.

[26] Public Law 104–121, 110 Stat. 857, 858 (Mar. 29, 1996), 5 U.S.C. 601 note.

that ophthalmologists and optometrists will complete 4,641 reports annually and that it will take them 8 minutes to complete a report. Thus, the estimated annual burden hours associated with the information collection is 619 hours (4,641 forms × 8 minutes per form ÷ 60 minutes = 619 hours, rounded to the nearest whole hour). At an average hourly labor cost of $84.22 for optometrists,[27] the estimated salary cost associated with this information collection is $52,130 ($84.22 hourly labor costs × 619 hours = $52,130, rounded to the nearest dollar).

Estimated number of respondents: 4,641 ophthalmologists and optometrists.

Estimated responses: 4,641.

Frequency: At least annually.

Estimated burden hours: 619.

Estimated cost: $52,130.

The alternative vision standard eliminates the need for the Federal vision exemption program and the related information collection (IC–3a). The vision exemption program requires individuals to submit personal, health, and driving information during the application process. In addition, motor carriers must copy and file the vision exemption in the driver qualification file. FMCSA attributes, in the OMB-approved supporting statement for IC–3a, 2,236 annual burden hours at a cost of $67,486 to obtain and maintain a vision exemption, which is eliminated by this rule.

The net effect of this rule on this ICR is a reduction in burden hours of 1,617 hours (619 hours related to the Vision Evaluation Report, Form MCSA–5871 − 2,236 hours related to the current vision exemption program = − 1,617). In addition, the net effect of the rule with respect to costs is a reduction of $15,356 ($52,130 related to the report − $67,486 related to the current vision exemption program = − $15,356).

The revised total annual estimated burden associated with the Medical Qualification Requirements ICR that reflects the addition of the information collection for the Vision Evaluation Report, Form MCSA–5871, and elimination of the Federal vision exemption program is as follows.

Total estimated number of respondents: 6,226,330 CMV drivers, motor carriers, MEs, treating clinicians, ophthalmologists, and optometrists.

Total estimated responses: 35,545,790.

Total estimated burden hours: 2,705,862.

Total estimated cost: $194,994,040.

[27] An hourly wage rate for ophthalmologists is not available.

Additional information for the assumptions, calculations, and methodology summarized above is provided in the supporting statement for the Medical Qualification Requirements ICR. The supporting statement is available in the docket for this rulemaking.

b. 391.31 Road Test Requirement ICR

FMCSA establishes a new 391.31 Road Test Requirement ICR. The ICR estimates the paperwork burden motor carriers incur to comply with the reporting and recordkeeping tasks required for the road test associated with 49 CFR 391.31. FMCSA has not previously accounted for the burden associated with § 391.31 road tests; accordingly, the ICR accounts for the burden. The ICR includes the incremental burden for motor carriers associated with § 391.31 road tests due to this final rule.

Title: 391.31 Road Test Requirement.

OMB Control Number: 2126–0072.

Type of Review: Approval of a new information collection.

Summary: The road test provision in § 391.31 provides an individual must not drive a CMV until the individual has successfully completed a road test and has been issued a certificate of driver's road test. It was adopted by FHWA in 1970 (35 FR 6458, 6462 (Apr. 22, 1970)). At that time, FHWA stated that the interests of CMV safety would be promoted by ensuring drivers have demonstrated their skill by completing a road test (35 FR 6459). The related requirement in § 391.51 that the motor carrier include information relating to the road test in the driver qualification file was also adopted in 1970 (35 FR 6465). The information documents the driver's ability to operate a CMV safely.

Sections 391.31 and 391.51 are based on the authority of the Motor Carrier Act of 1935 [28] (1935 Act) and the Motor Carrier Safety Act of 1984 [29] (1984 Act), both as amended. The 1935 Act, as codified at 49 U.S.C. 31502(b), authorizes the Secretary to prescribe requirements for the qualifications of employees of a motor carrier and the safety of operation and equipment of a motor carrier. The 1984 Act, as codified at 49 U.S.C. 31136, provides concurrent authority to regulate drivers, motor carriers, and vehicle equipment. Section 31136(a) requires the Secretary to issue regulations on CMV safety, including regulations to ensure that CMVs are operated safely. The Secretary has discretionary authority under 49 U.S.C. 31133(a)(8) to prescribe recordkeeping and reporting requirements. The Administrator of FMCSA is delegated authority under 49 CFR 1.87 to carry out the functions vested in the Secretary by 49 U.S.C. Chapters 311 and 315 as they relate to CMV operators, programs, and safety.

[28] Public Law 74–255, 49 Stat. 543 (Aug. 9, 1935).

[29] Public Law 98–554, 98 Stat. 2829 (Oct. 30, 1984).

Motor carriers must ensure each driver has the skill to operate a CMV safely. The information collected and maintained by motor carriers in each driver qualification file related to the road test substantiates the driver can operate a CMV safely and the motor carrier has fulfilled its regulatory requirements. It also aids Federal and State safety investigators in assessing the qualifications of drivers.

Public interest in highway safety dictates that employers hire drivers who can safely operate CMVs amid the various physical and mental demands of truck and bus driving. Section 391.31 requires a motor carrier to conduct a road test when the motor carrier hires a new driver. The motor carrier is required to rate the performance of the driver during the test on a road test form. If the road test is successfully completed, the motor carrier completes a certificate of driver's road test and provides a copy to the driver. Motor carriers may maintain the required road test form and certificate electronically or via paper copy. The motor carrier must retain the signed road test form and the signed certificate in the driver qualification file. Generally, driver qualification files must be maintained at the motor carrier's principal place of business. Neither the road test form nor the certificate is routinely submitted to FMCSA. A motor carrier would only make the information available when requested by an FMCSA or State safety investigator for an investigation or audit.

As indicated above, there are three reporting and recordkeeping tasks motor carriers perform regarding the road test required by § 391.31 when they hire a new driver. The three tasks are:

1. The motor carrier completes and signs the road test form while the driver performs a pre-trip inspection and the driving portion of the road test (49 CFR 391.31(d)).
2. If the driver successfully passes the road test, the motor carrier completes a certificate of driver's road test in substantially the form prescribed in § 391.31(f) (49 CFR 391.31(e)) and gives the driver a copy (49 CFR 391.31(g)).
3. The motor carrier retains in the driver qualification file the original signed road test form and the original, or a copy, of the signed certificate of driver's road test (49 CFR 391.31(g)(1) and (2)).

Response to comments: The NPRM served as the 60-day notice for the

information collection and requested public comment on it. FMCSA received no substantive comments regarding the burden associated with the information collection in response to the NPRM. However, ATA referenced ''a 30-minute road test,'' which is consistent with FMCSA's estimate for the road test. ACOEM expressed general concern that the number of employer-required road tests would significantly increase due to the alternative vision standard but provided no specific data or number. FMCSA finds no basis from the comments to change the analysis of the burden for the information collection.

Burden estimates: To estimate the total burden hours, FMCSA multiplies the number of respondents by the hourly burden per response. FMCSA estimates a burden of 30 minutes for the motor carrier to complete the road test form while conducting the road test. Should the driver successfully pass the road test, FMCSA assumes it will take the motor carrier 2 minutes to complete the certification of driver's road test and an additional 1 minute to store documents in the driver qualification file.

To estimate costs, FMCSA assumes a compliance officer will be the person who will complete the road test form and associated certificate, and a file clerk will be the person who will store the documents. The median salary for a compliance officer is $61.35 per hour. The median salary for a file clerk is $29.42 per hour.

The ICR estimates the information-collection burden incurred by motor carriers associated with the § 391.31 road test in two circumstances. The first is when the road test is required by § 391.31 (IC–1); the second is when the road test is required as part of the alternative vision standard in § 391.44 (IC–2). Most of the motor carrier burden hours and cost for the information collection relates to IC–1 and is reflected below in the total burden and cost amounts for the ICR.

IC–2 consists of the incremental burden associated with the requirement in this rule that individuals physically qualified under the alternative vision standard in § 391.44 for the first time must complete a road test in accordance with § 391.31. However, individuals are excepted from the road test requirement if they have 3 years of intrastate or specific excepted interstate CMV driving experience with the vision deficiency, hold a valid Federal vision exemption, or are medically certified under § 391.64(b). FMCSA estimates there will be approximately 868 drivers requiring a road test under § 391.44 each year. Therefore, the respondent universe of motor carriers is also 868.

The estimated incremental annual burden associated with the requirement in this rule that certain individuals physically qualified under § 391.44 for the first time must complete a road test in accordance with § 391.31 (IC–2), is as follows.

Estimated number of respondents: 868 motor carriers.

Estimated responses: 2,604.

Frequency: Once.

Estimated burden hours: 477.

Estimated cost: $28,735.

The total estimated annual burden associated with the 391.31 Road Test Requirement ICR for IC–1 and IC–2 is as follows:

Total estimated number of respondents: 497,981 motor carriers.

Total estimated responses: 1,493,943.

Total estimated burden hours: 273,888.

Total estimated cost: $16,485,764.

Additional information for the assumptions, calculations, and methodology summarized above is provided in the supporting statement for the 391.31 Road Test Requirement ICR. The supporting statement is available in the docket for this rulemaking.

2. Net Information Collection Reporting Burdens

As shown in Table 4 below, the combined net effect of the rule on the two ICRs is a reduction in burden hours of 1,140 and an addition of cost in the amount of $12,255.

TABLE 4—NET BURDEN OF MEDICAL QUALIFICATIONS REQUIREMENTS ICR AND ROAD TEST ICR

ICR	Burden hours	Cost
Medical Qualifications Requirements	(1,617)	($16,480)
Road Test	477	$28,735
Net Burden	(1,140)	$12,255

3. Request for Comments

FMCSA asks for comment on the information collection requirements of this rule, as well as the revised total estimated burden associated with the Medical Qualification Requirements ICR and the total estimated burden associated with the new 391.31 Road Test Requirement ICR. Specifically, the Agency asks for comment on: (1) Whether the proposed information collections are necessary for FMCSA to perform its functions; (2) how the Agency can improve the quality, usefulness, and clarity of the information to be collected; (3) the accuracy of FMCSA's estimate of the burden of this information collection; and (4) how the Agency can minimize the burden of the information collection.

If you have comments on the collection of information, you must submit those comments as outlined under **ADDRESSES** at the beginning of this final rule.

G. E.O. 13132 (Federalism)

A rule has implications for federalism under section 1(a) of E.O. 13132 if it has ''substantial direct effects on the States, on the relationship between the national government and the States, or on the distribution of power and responsibilities among the various levels of government.'' FMCSA has determined that this rule does not have substantial direct costs on or for States, nor will it limit the policymaking discretion of States. Nothing in this document preempts any State law or regulation. Therefore, this rule does not have sufficient federalism implications to warrant the preparation of a Federalism Impact Statement.

H. Privacy

Section 522 of title I of division H of the Consolidated Appropriations Act, 2005,[30] requires the Agency to conduct a privacy impact assessment of a regulation that will affect the privacy of individuals. The assessment considers impacts of the rule on the privacy of information in an identifiable form and related matters.

This rule requires the collection of personally identifiable information and protected health information via the Vision Evaluation Report, Form MCSA–5871. The privacy risks and effects associated with this rule are not unique and have been addressed previously by the DOT/FMCSA 009—National Registry of Certified Medical Examiners system of records notice published on October 4, 2019 (84 FR 53211).[31] The DOT Chief Privacy Officer will determine whether a new system of records notice for this rule is required.

Before an individual may be medically certified under the alternative vision standard adopted in this rule, the individual must have a vision evaluation conducted by an ophthalmologist or optometrist. The ophthalmologist or optometrist records the findings of the vision evaluation and provides specific medical opinions on

[30] Public Law 108–447, 118 Stat. 2809, 3268 (Dec. 8, 2004), 5 U.S.C. 552a note.

[31] Available at *https://www.transportation.gov/individuals/privacy/privacy-act-system-records-notices* (last accessed Sept. 21, 2021).

the new Vision Evaluation Report, Form MCSA–5871. Then, an ME performs a physical qualification examination and uses the information provided on the report to determine whether the individual meets the alternative vision standard. The Vision Evaluation Report, Form MCSA–5871, is used exclusively as part of the physical qualification process. It collects only the information that is necessary for the ME to determine whether an individual meets the alternative vision standard and may be medically certified.

The Vision Evaluation Report, Form MCSA–5871, provides a means for healthcare professionals to exchange information about an individual for purposes of regulatorily required medical certification to operate a CMV. The report promotes uniform and consistent communication between ophthalmologists or optometrists and the certifying MEs. This is the same type of communication that occurs when the ME needs to follow up with an individual's primary care provider regarding the individual's health and exchanges information. Therefore, no new category of medical or privacy information is generated because of this rule.

The Agency expects that the Vision Evaluation Report, Form MCSA–5871, will be safeguarded along with all the other medical information that these healthcare providers retain. The report must be treated and retained as part of the Medical Examination Report Form, MCSA–5875, in the ME's medical records for the individual. The report must be retained by the ME for at least 3 years from the date of the physical qualification examination. The Vision Evaluation Report, Form MCSA–5871, is provided to FMCSA only upon request if there is an investigation or audit. Therefore, this rule provides a privacy-positive outcome because it results in less sensitive data being held by the Agency. There is privacy risk not controlled by the Agency because the Vision Evaluation Report, Form MCSA–5871, is retained by MEs. However, as healthcare providers, MEs are required to retain and disclose medical information and personally identifiable information in accordance with applicable Federal and State privacy laws.

With respect to the requirement that a Vision Evaluation Report, Form MCSA–5871, must be completed as part of the new alternative vision standard, the Agency has completed a Privacy Threshold Assessment to evaluate the risks and effects the requirement has on collecting, storing, and sharing personally identifiable information and protected health information.

With respect to the requirement for a road test as part of the alternative vision standard, the Agency also has completed a Privacy Threshold Assessment to evaluate the risks and effects the requirement has on collecting, storing, and sharing personally identifiable information.

I. E.O. 13175 (Indian Tribal Governments)

This rule does not have Tribal implications under E.O. 13175, Consultation and Coordination with Indian Tribal Governments, because it does not have a substantial direct effect on one or more Indian Tribes, on the relationship between the Federal Government and Indian Tribes, or on the distribution of power and responsibilities between the Federal Government and Indian Tribes.

J. National Environmental Policy Act of 1969

FMCSA analyzed this final rule pursuant to the National Environmental Policy Act of 1969 (42 U.S.C. 4321 *et seq.*) and determined this action is categorically excluded from further analysis and documentation in an environmental assessment or environmental impact statement under FMCSA Order 5610.1 (69 FR 9680 (Mar. 1, 2004)), Appendix 2, paragraph 6.z. The content in this rule is covered by the categorical exclusions in paragraph 6.z.(1) regarding the minimum qualifications for individuals who drive CMVs, and in paragraph 6.z.(2) regarding the minimum duties of motor carriers with respect to the qualifications of their drivers. In addition, the rule does not have any effect on the quality of the environment.

List of Subjects in 49 CFR Part 391

Alcohol abuse, Drug abuse, Drug testing, Highway safety, Motor carriers, Reporting and recordkeeping requirements, Safety, Transportation.

Accordingly, FMCSA amends 49 CFR part 391 as follows:

PART 391—QUALIFICATIONS OF DRIVERS AND LONGER COMBINATION VEHICLE (LCV) DRIVER INSTRUCTORS

■ 1. The authority citation for part 391 continues to read as follows:

Authority: 49 U.S.C. 504, 508, 31133, 31136, 31149, 31502; sec. 4007(b), Pub. L. 102–240, 105 Stat. 1914, 2152; sec. 114, Pub. L. 103–311, 108 Stat. 1673, 1677; sec. 215, Pub. L. 106–159, 113 Stat. 1748, 1767; sec. 32934, Pub. L. 112–141, 126 Stat. 405, 830; secs. 5403 and 5524, Pub. L. 114–94, 129 Stat. 1312, 1548, 1560; sec. 2, Pub. L. 115–105, 131 Stat. 2263; and 49 CFR 1.87.

■ 2. Amend § 391.31 by:

■ a. In paragraph (f), removing the entries ''Social Security No'', ''Operator's or Chauffeur's License No'', and ''State'' in the Certification of Road Test form; and

■ b. Adding paragraph (h).

The addition reads as follows:

§ 391.31 Road test.

* * * * *

(h) The information collection requirements of this section have been reviewed by the Office of Management and Budget (OMB) pursuant to the Paperwork Reduction Act of 1995 (44 U.S.C. 3501 *et seq.*) and have been assigned OMB control number 2126–0072.

■ 3. Revise § 391.41(b)(10) to read as follows:

§ 391.41 Physical qualifications for drivers.

* * * * *

(b) * * *

(10)(i) Has distant visual acuity of at least 20/40 (Snellen) in each eye without corrective lenses or visual acuity separately corrected to 20/40 (Snellen) or better with corrective lenses, distant binocular acuity of at least 20/40 (Snellen) in both eyes with or without corrective lenses, field of vision of at least 70° in the horizontal meridian in each eye, and the ability to recognize the colors of traffic signals and devices showing standard red, green, and amber; or

(ii) Meets the requirements in § 391.44, if the person does not satisfy, with the worse eye, either the distant visual acuity standard with corrective lenses or the field of vision standard, or both, in paragraph (b)(10)(i) of this section;

* * * * *

■ 4. Revise § 391.43(b)(1) to read as follows:

§ 391.43 Medical examination; certificate of physical examination.

* * * * *

(b) * * *

(1) A licensed ophthalmologist or licensed optometrist may perform the part of the medical examination that involves visual acuity, field of vision, and the ability to recognize colors as specified in § 391.41(b)(10).

* * * * *

■ 5. Add § 391.44 to read as follows:

§ 391.44 Physical qualification standards for an individual who does not satisfy, with the worse eye, either the distant visual acuity standard with corrective lenses or the field of vision standard, or both.

(a) *General.* An individual who does not satisfy, with the worse eye, either the distant visual acuity standard with corrective lenses or the field of vision standard, or both, in § 391.41(b)(10)(i) is physically qualified to operate a commercial motor vehicle in interstate commerce provided:

(1) The individual meets the other physical qualification standards in § 391.41 or has an exemption or skill performance evaluation certificate, if required; and

(2) The individual has the vision evaluation required by paragraph (b) of this section and the medical examination required by paragraph (c) of this section.

(b) *Evaluation by an ophthalmologist or optometrist.* Prior to the examination required by § 391.45 or the expiration of a medical examiner's certificate, the individual must be evaluated by a licensed ophthalmologist or licensed optometrist.

(1) During the evaluation of the individual, the ophthalmologist or optometrist must complete the Vision Evaluation Report, Form MCSA–5871.

(2) Upon completion of the Vision Evaluation Report, Form MCSA–5871, the ophthalmologist or optometrist must sign and date the Report and provide the ophthalmologist or optometrist's full name, office address, and telephone number on the Report.

(c) *Examination by a medical examiner.* At least annually, an individual who does not satisfy, with the worse eye, either the distant visual acuity standard with corrective lenses or the field of vision standard, or both, in § 391.41(b)(10)(i) must be medically examined and certified by a medical examiner as physically qualified to operate a commercial motor vehicle in accordance with § 391.43. The examination must begin not more than 45 days after an ophthalmologist or optometrist signs and dates the Vision Evaluation Report, Form MCSA–5871.

(1) The medical examiner must receive a completed Vision Evaluation Report, Form MCSA–5871, signed and dated by an ophthalmologist or optometrist for each required examination. This Report shall be treated and retained as part of the Medical Examination Report Form, MCSA–5875.

(2) The medical examiner must determine whether the individual meets the physical qualification standards in § 391.41 to operate a commercial motor vehicle. In making that determination, the medical examiner must consider the information in the Vision Evaluation Report, Form MCSA–5871, signed by an ophthalmologist or optometrist and, utilizing independent medical judgment, apply the following standards in determining whether the individual may be certified as physically qualified to operate a commercial motor vehicle.

(i) The individual is not physically qualified to operate a commercial motor vehicle if, in the better eye, the distant visual acuity is not at least 20/40 (Snellen), with or without corrective lenses, and the field of vision is not at least 70° in the horizontal meridian.

(ii) The individual is not physically qualified to operate a commercial motor vehicle if the individual is not able to recognize the colors of traffic signals and devices showing standard red, green, and amber.

(iii) The individual is not physically qualified to operate a commercial motor vehicle if the individual's vision deficiency is not stable.

(iv) The individual is not physically qualified to operate a commercial motor vehicle if sufficient time has not passed since the vision deficiency became stable to allow the individual to adapt to and compensate for the change in vision.

(d) *Road test.* (1) Except as provided in paragraphs (d)(3), (4), and (5) of this section, an individual physically qualified under this section for the first time shall not drive a commercial motor vehicle until the individual has successfully completed a road test subsequent to physical qualification and has been issued a certificate of driver's road test in accordance with § 391.31. An individual physically qualified under this section for the first time must inform the motor carrier responsible for completing the road test under § 391.31(b) that the individual is required by paragraph (d) of this section to have a road test. The motor carrier must conduct the road test in accordance with § 391.31(b) thorough (g).

(2) For road tests required by paragraph (d)(1) of this section, the provisions of § 391.33 for the equivalent of a road test do not apply. If an individual required to have a road test by paragraph (d)(1) of this section successfully completes the road test and is issued a certificate of driver's road test in accordance with § 391.31, then any otherwise applicable provisions of § 391.33 will apply thereafter to such individual.

(3) An individual physically qualified under this section for the first time is not required to complete a road test in accordance with § 391.31 if the motor carrier responsible for completing the road test under § 391.31(b) determines the individual possessed a valid commercial driver's license or non-commercial driver's license to operate, and did operate, a commercial motor vehicle in either intrastate commerce or in interstate commerce excepted by § 390.3T(f) of this subchapter or § 391.2 from the requirements of this subpart with the vision deficiency for the 3-year period immediately preceding the date of physical qualification under this section for the first time.

(i) The individual must certify in writing to the motor carrier the date the vision deficiency began.

(ii) If the motor carrier determines the individual possessed a valid commercial driver's license or non-commercial driver's license to operate, and did operate, a commercial motor vehicle in either intrastate commerce or in interstate commerce excepted by either § 390.3T(f) of this subchapter or § 391.2 from the requirements of this subpart with the vision deficiency for the 3-year period immediately preceding the date of physical qualification in accordance with this section for the first time, the motor carrier must—

(A) Prepare a written statement to the effect that the motor carrier determined the individual possessed a valid license and operated a commercial motor vehicle in intrastate or in the specific excepted interstate commerce (as applicable) with the vision deficiency for the 3-year period immediately preceding the date of physical qualification in accordance with this section for the first time and, therefore, is not required by paragraph (d) of this section to complete a road test;

(B) Give the individual a copy of the written statement; and

(C) Retain in the individual's driver qualification file the original of the written statement and the original, or a copy, of the individual's certification regarding the date the vision deficiency began.

(4) An individual physically qualified under this section for the first time is not required to complete a road test in accordance with § 391.31 if the individual held on March 22, 2022, a valid exemption from the vision standard in § 391.41(b)(10)(i) issued by FMCSA under 49 CFR part 381. Such an individual is not required to inform the motor carrier that the individual is excepted from the requirement in paragraph (d)(1) of this section to have a road test.

(5) An individual physically qualified under this section for the first time is

not required to complete a road test in accordance with § 391.31 if the individual was medically certified on March 22, 2022, under the provisions of § 391.64(b) for drivers who participated in a previous vision waiver study program. Such an individual is not required to inform the motor carrier that the individual is excepted from the requirement in paragraph (d)(1) of this section to have a road test.

■ 6. Amend § 391.45 by:

■ a. Revising paragraph (b);

■ b. Redesignating paragraphs (f) and (g) as paragraphs (g) and (h), respectively; and

■ c. Adding a new paragraph (f).

The revision and addition read as follows:

§ 391.45 Persons who must be medically examined and certified.

* * * * *

(b) Any driver who has not been medically examined and certified as qualified to operate a commercial motor vehicle during the preceding 24 months, unless the driver is required to be examined and certified in accordance with paragraph (c), (d), (e), (f), (g), or (h) of this section;

* * * * *

(f) Any driver who does not satisfy, with the worse eye, either the distant visual acuity standard with corrective lenses or the field of vision standard, or both, in § 391.41(b)(10)(i) and who has obtained a medical examiner's certificate under the standards in § 391.44, if such driver's most recent medical examination and certification as qualified to drive did not occur during the preceding 12 months;

* * * * *

■ 7. Revise § 391.51(b)(3) to read as follows:

§ 391.51 General requirements for driver qualification files.

* * * * *

(b) * * *

(3) The certificate of driver's road test issued to the driver pursuant to § 391.31(e), a copy of the license or certificate which the motor carrier accepted as equivalent to the driver's road test pursuant to § 391.33, or the original of the written statement providing that the motor carrier determined the driver is not required by § 391.44(d) to complete a road test pursuant to § 391.44(d)(3)(ii)(A) and the original, or a copy, of the driver's certification required by § 391.44(d)(3)(i);

* * * * *

■ 8. Amend § 391.64 by revising paragraph (b) introductory text and adding paragraph (b)(4) to read as follows:

§ 391.64 Grandfathering for certain drivers who participated in a vision waiver study program.

* * * * *

(b) Until March 22, 2022, the provisions of § 391.41(b)(10) do not apply to a driver who was a participant in good standing on March 31, 1996, in a waiver study program concerning the operation of commercial motor vehicles by drivers with visual impairment in one eye; *provided:*

* * * * *

(4) On March 22, 2022, the provisions of paragraph (b) of this section are no longer in effect, and any medical examiner's certificate issued under § 391.43 on the basis that the driver is qualified by operation of the provisions of paragraph (b) of this section, related to drivers with visual impairment in one eye, is void.

Appendix A to Part 391—[Amended]

■ 9. Remove and reserve paragraph II.J. of appendix A to part 391.

Issued under the authority of delegation in 49 CFR 1.87.

Meera Joshi,

Deputy Administrator.

[FR Doc. 2022–01021 Filed 1–20–22; 8:45 am]

BILLING CODE 4910–EX–P

Reader Aids

Federal Register

Vol. 87, No. 14

Friday, January 21, 2022

CUSTOMER SERVICE AND INFORMATION

Federal Register/Code of Federal Regulations	
General Information, indexes and other finding aids	**202–741–6000**
Laws	**741–6000**
Presidential Documents	
Executive orders and proclamations	**741–6000**
The United States Government Manual	**741–6000**
Other Services	
Electronic and on-line services (voice)	**741–6020**
Privacy Act Compilation	**741–6050**

ELECTRONIC RESEARCH

World Wide Web

Full text of the daily Federal Register, CFR and other publications is located at: **www.govinfo.gov.**

Federal Register information and research tools, including Public Inspection List and electronic text are located at: **www.federalregister.gov.**

E-mail

FEDREGTOC (Daily Federal Register Table of Contents Electronic Mailing List) is an open e-mail service that provides subscribers with a digital form of the Federal Register Table of Contents. The digital form of the Federal Register Table of Contents includes HTML and PDF links to the full text of each document.

To join or leave, go to **https://public.govdelivery.com/accounts/USGPOOFR/subscriber/new**, enter your email address, then follow the instructions to join, leave, or manage your subscription.

PENS (Public Law Electronic Notification Service) is an e-mail service that notifies subscribers of recently enacted laws.

To subscribe, go to **http://listserv.gsa.gov/archives/publaws-l.html and select** *Join or leave the list (or change settings);* then follow the instructions.

FEDREGTOC and **PENS** are mailing lists only. We cannot respond to specific inquiries.

Reference questions. Send questions and comments about the Federal Register system to: **fedreg.info@nara.gov**

The Federal Register staff cannot interpret specific documents or regulations.

FEDERAL REGISTER PAGES AND DATE, JANUARY

1–150 3
151–376 4
377–728 5
729–874 6
875–1060 7
1061–1316 10
1317–1656 11
1657–2026 12
2027–2308 13
2309–2522 14
2523–2672 18
2673–3020 19
3021–3174 20
3175–3420 21

CFR PARTS AFFECTED DURING JANUARY

At the end of each month the Office of the Federal Register publishes separately a List of CFR Sections Affected (LSA), which lists parts and sections affected by documents published since the revision date of each title.

2 CFR

200 2673

3 CFR

Proclamations:
9704 (Amended by Proc. 10327) 1
9705 (Amended by Proc. 10328) 11
9980 (Amended by Proc. 10328) 11
10315 (Revoked by Proc. 10329) 149
10327 1
10328 11
10329 149
10330 151
10331 869
10332 871
10333 873
10334 3021
10335 3023
Administrative Orders:
Memorandums:
Memorandum of December 27, 2021 27

5 CFR

1201 3175
2634 2523
2636 2523
Proposed Rules:
315 200
432 200
724 736
752 200

6 CFR

27 1317

8 CFR

270 1317
274a 1317
280 1317

9 CFR

93 29

10 CFR

2 ..... 2309, 2310
13 2310
207 1061
218 1061
429 1061
430 2673
431 1061
490 1061
501 1061
601 1061
820 1061
824 1061
851 1061
1013 1061
1017 1061
1050 1061
Proposed Rules:
Ch. I 2361
429 ..... 890, 1554, 2490, 2731
430 ..... 890, 1554, 2559, 2731, 3229
431 ..... 1554, 2490, 2731
460 2359

12 CFR

19 1657
109 1657
209 2027
263 2312
337 1065
622 1331
747 377
1006 3025
1022 3025
1083 2314
1209 1659
1217 1659
1250 1659
1411 2031
Proposed Rules:
1102 2079

13 CFR

121 380

14 CFR

25 ..... 1066, 1662, 3026
27 1068
29 2689
39 ..... 29, 382, 385, 1333, 1335, 1338, 1340, 1343, 1346, 1349, 1352, 1664, 1666, 1668, 2316, 2525, 2528, 2530, 2532, 2534, 2692, 2699, 3028, 3030, 3032, 3176, 3182, 3184, 3188
71 ..... 2032, 2319, 2320, 2322, 2324, 2325, 2327, 2536, 2538, 2540, 2541
95 388
97 ..... 153, 156
Proposed Rules:
25 ..... 2561, 3050
39 ..... 55, 1083, 1703, 1706, 2085, 2362, 2365, 2368, 2563, 3050, 3236, 3238, 3241, 3244, 3246
71 ..... 2088, 2090, 2091, 2370, 2372, 2373, 2375, 2566, 2568, 2569

15 CFR

6 157
15 160
740 1670

772....1670
774....729, 1670

16 CFR

1....1070
Proposed Rules:
1112....1014, 1260
1120....891
1260....1014
1262....1260

17 CFR

143....2033
232....391

18 CFR

11....3190
12....1490, 2702
35....2244
250....2036
385....2036

19 CFR

4....1317

20 CFR

655....2328
702....2328
725....2328
726....2328

21 CFR

101....2542
130....2542
169....2038
814....2042
870....2547
882....2045
886....3203
1270....2045
Proposed Rules:
15....2093
112....913
866....3250
1308....2376

22 CFR

22....2703
35....1072
42....2703
103....1072
127....1072
138....1072

23 CFR

625....32

25 CFR

575....2549
Proposed Rules:
537....2383
559....2095, 2384

26 CFR

1....166, 276
301....166

27 CFR

478....182

28 CFR

523....2705
541....2705

29 CFR

5....2328
500....2328
501....2328
503....2328
530....2328
570....2328
578....2328
579....2328
801....2328
810....2328
825....2328
1903....2328
4071....2340
4302....2340

30 CFR

100....2328
870....2341
872....2341
1241....1671
Proposed Rules:
917....1370
926....1372

31 CFR

210....42
501....3206
590....3207
800....731
802....731, 875

33 CFR

1....3217
6....3217
27....1317
62....3217
100....3035
151....3217
160....3217
165....875, 1074, 1076, 1078, 1354, 2049, 2347, 2550, 2552, 3035
173....3217
Proposed Rules:
165....916
334....3257

34 CFR

Proposed Rules:
Ch. II....57, 1709

36 CFR

Proposed Rules:
7....413, 1374

38 CFR

36....3225
42....3225
Proposed Rules:
4....1522
17....418
21....1087

39 CFR

111....1673
233....1674
273....1674
Proposed Rules:
3050....2384

40 CFR

19....1676
52....1356, 1358, 1680, 1683, 1685, 2554, 2555, 2719, 2723
63....393
81....1685
82....3037
147....47
180....1360, 1363, 2725
271....194
Proposed Rules:
52....2095, 2101, 2385, 2571, 2731, 3259
63....421, 1616
70....2731
87....2735
180....1091
261....3053
271....209
1030....2735
1031....2735

41 CFR

50–201....2328
102–173....1080
105–70....2349

42 CFR

410....2051
412....2058
414....199, 2051
416....2058
419....2058
512....2058
1008....1367
Proposed Rules:
422....1842
423....1842
493....2736

43 CFR

8365....732

45 CFR

180....2058
1149....2065
1158....2065
1230....2728
2554....2728
Proposed Rules:
144....584
147....584
153....584
155....584
156....584
158....584
1167....210

46 CFR

4....3217
5....3217
7....3217
11....3217
13....3217
15....3217
31....3217
67....3217
71....3217
91....3217
107....3217
126....3217
144....3217
147....3217
172....3217
189....3217
506....2350
Proposed Rules:
2....1378

47 CFR

1....396
52....398
73....3045, 3226, 3227
300....2729
Proposed Rules:
64....212

48 CFR

326....2067
352....2067
615....1081
652....1081
Proposed Rules:
Ch. 7....2104

49 CFR

391....3390
831....2352
1022....2353
1503....1317
Proposed Rules:
1144....62
1145....62

50 CFR

12....876
13....876
17....546, 876
19....876
20....876
21....876
22....876
217....885
300....885
622....51, 53, 886, 2355
648....887, 1688, 1700, 2557
665....3045
679....412, 735, 2358, 2558, 3048
Proposed Rules:
17....1390, 2107, 2389
217....3262
622....2389, 2737
648....2399, 2587
665....2742, 3276

LIST OF PUBLIC LAWS

This is the first in a continuing list of public bills from the second session of the 117th Congress which have become Federal laws. This list is also available online at *https://www.archives.gov/federal-register/laws*.

The text of laws is not published in the **Federal Register** but may be ordered in "slip law" (individual pamphlet) form from the Superintendent of Documents, U.S. Government Publishing Office, Washington, DC 20402 (phone, 202–512–1808). The text will also be made available at *https://www.govinfo.gov*. Some laws may not yet be available.

H.R. 1192/P.L. 117–82
Puerto Rico Recovery Accuracy in Disclosures Act of 2021 (Jan. 20, 2022; 136 Stat. 3)

Last List December 30, 2021

Public Laws Electronic Notification Service (PENS)

PENS is a free email notification service of newly enacted public laws. To subscribe, go to *https://listserv.gsa.gov/cgi-bin/wa.exe?SUBED1=PUBLAWS-L&A=1*

Note: This service is strictly for email notification of new laws. The text of laws is not available through this service. **PENS** cannot respond to specific inquiries sent to this address.